04 - STRUCTURES

INDEX OF DRAWINGS

DRAWING NUMBER	DRAWING TITLE	DRAWING NUMBER	DRAWING TITLE
S-1	INDEX OF DRAWINGS	S-26	UHPC BEAM END REPAIR DETAILS - 2
S-2	GENERAL PLAN AND GENERAL NOTES	S-27	DIAPHRAGM DETAILS
S-3	TYPICAL EXISTING SECTIONS		
S-4	ELEVATION ABUTMENTS 1 AND 2		
S-5	PIER 1 ELEVATION		
S-6	PIER 2 ELEVATION		
S-7	PIER 3 ELEVATION		
S-8	PIER 4 ELEVATION		
S-9	PIER 5 ELEVATION		
S-10	PIER 8 ELEVATION		
S-11	PIER 9 ELEVATION		
S-12	PIER 11 ELEVATION		
S-13	CONCRETE DECK PLAN		
S-14	DECK END RECONSTRUCTION SUGGESTED SEQUENCE		
S-15	TYPICAL JOINT DETTAILS AND NOTES		
S-16	PARAPET JOINT DETAILS		
S-17	CONCRETE REPAIR DETAILS - 1		
S-18	CONCRETE REPAIR DETAILS - 2		
S-19	FRAMING PLAN SPAN 1 AND 2		
S-20	FRAMING PLAN SPAN 3 AND 4		
S-21	FRAMING PLAN SPAN 5 AND 6		
S-22	FRAMING PLAN SPAN 7 AND 8		
S-23	FRAMING PLAN SPAN 9 AND 12		
S-24	FRAMING PLAN SPAN 10 AND 11		
S-25	UHPC BEAM END REPAIR DETAILS - 1		

THE DESIGN APPEARS TO CONFORM TO APPLICABLE CRITERIA. APPROVAL IS NOT TO BE CONSTRUED TO MEAN THAT ALL ASPECTS OF THE DESIGN HAVE BEEN PERSONALLY CHECKED BY THE UNDERSIGNED.

Digitally signed by Andrew J. Cardinali, P.E.
Date: 2021.01.21 06:49:42-05'00'

TRANSPORTATION PRINCIPAL ENGINEER

REV.	DATE	REVISION DESCRIPTION	SHEET NO.

THE INFORMATION, INCLUDING ESTIMATED QUANTITIES OF WORK, SHOWN ON THESE SHEETS IS BASED ON LIMITED INVESTIGATIONS BY THE STATE AND IS IN NO WAY WARRANTED TO INDICATE THE CONDITIONS OF ACTUAL QUANTITIES OF WORK WHICH WILL BE REQUIRED.

Plotted Date: 1/12/2021

DESIGNER/DRAFTER: ECO
CHECKED BY: ZMK
SCALE AS NOTED

STATE OF CONNECTICUT
DEPARTMENT OF TRANSPORTATION

Filename: ..\0042-0325 Drawing Index.dgn

SIGNATURE/BLOCK:
OFFICE OF ENGINEERING
APPROVED BY:

PROJECT TITLE:
REHABILITATION OF BRIDGE NO. 05844A CARRYING I-84 OVER ROUTE 15

TOWN: **EAST HARTFORD**
DRAWING TITLE: **INDEX OF DRAWINGS**

PROJECT NO. **0042-0325**
DRAWING NO. **S-1**
SHEET NO. **04.01**

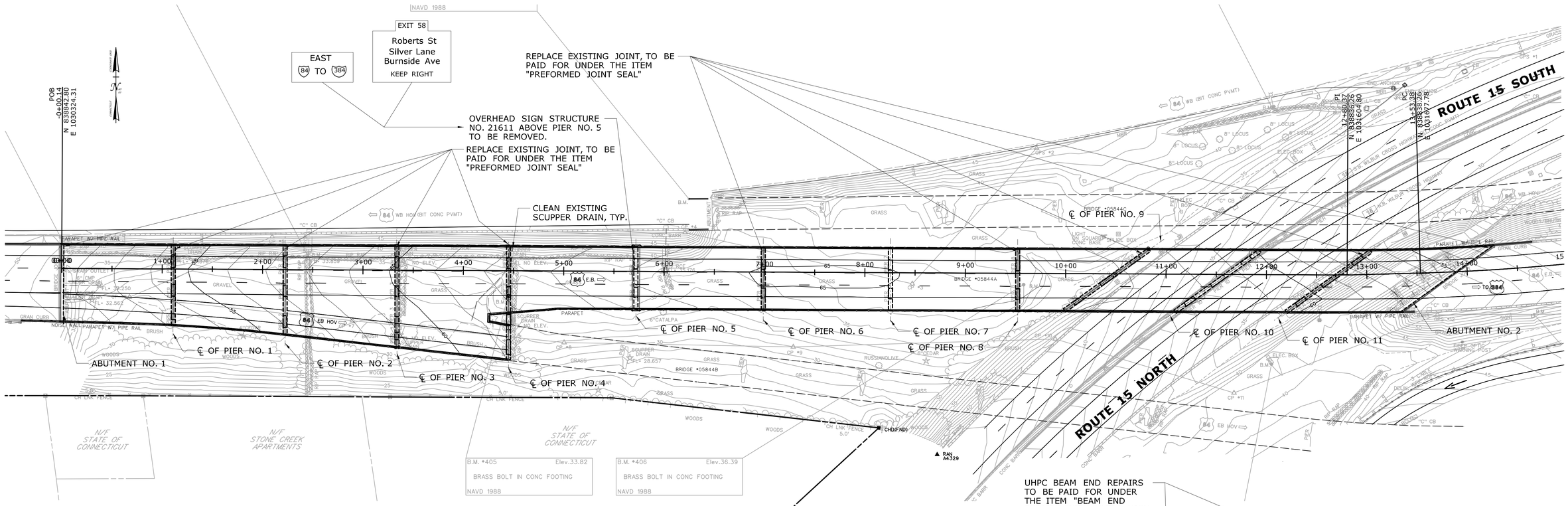

GENERAL PLAN - REHABILITATION OF BRIDGE NO. 05844A

SCALE: 1" = 50'

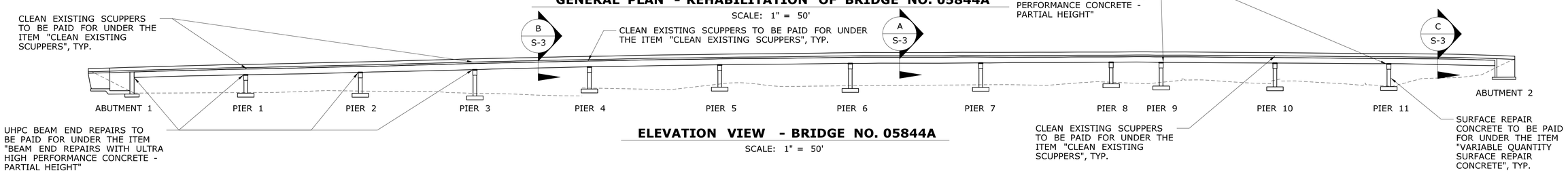

ELEVATION VIEW - BRIDGE NO. 05844A

SCALE: 1" = 50'

GENERAL NOTES

SPECIFICATIONS: CONNECTICUT DEPARTMENT OF TRANSPORTATION STANDARD SPECIFICATION FORM 818 (2020), JULY 2020 SUPPLEMENTS AND SPECIAL PROVISIONS.

DESIGN SPECIFICATIONS: AASHTO LRFD BRIDGE DESIGN SPECIFICATIONS CUSTOMARY U.S. UNITS (8TH EDITION - 2017) WITH LATEST INTERIMS, AND SUPPLEMENTED BY THE CONNECTICUT DEPARTMENT OF TRANSPORTATION BRIDGE DESIGN MANUAL (2003) WITH 2019 INTERIM REVISIONS.

ALLOWABLE DESIGN STRESSES: SEE SPECIFICATIONS FOR ALLOWABLE DESIGN STRESSES FOR ULTRA HIGH PERFORMANCE CONCRETE.

MATERIAL PROPERTIES:
SURFACE REPAIR CONCRETE:
CLASS PCC04481: F'c = 4000 PSI MIN.

THE CONCRETE STRENGTH, F'c, USED IN DESIGN OF THE CONCRETE COMPONENTS IS NOTED ABOVE. THE COMPRESSIVE STRENGTH OF THE CONCRETE IN THE CONSTRUCTED COMPONENTS SHALL CONFORM TO THE REQUIREMENTS OF 6.01 - CONCRETE FOR STRUCTURES, AND M.03 - PORTLAND CEMENT CONCRETE.

REINFORCEMENT:
REINFORCEMENT (ASTM A615, GRADE 60): Fy=60,000 PSI

LIVE LOAD: HL-93, LEGAL AND PERMIT VEHICLES

WELDING: WELDING DETAILS, PROCEDURES AND TESTING METHODS SHALL CONFORM TO THE AASHTO D1.5/D.15:2015 - BRIDGE WELDING CODE, UNLESS OTHERWISE NOTED.

DIMENSIONS: WHEN DECIMAL DIMENSIONS ARE GIVEN TO LESS THAN THREE DECIMAL PLACES, THE OMITTED DIGITS SHALL BE ASSUMED TO BE ZEROS.

EXISTING DIMENSIONS: DIMENSIONS OF THE EXISTING STRUCTURE SHOWN ON THESE PLANS ARE FOR GENERAL REFERENCE ONLY. THEY HAVE BEEN TAKEN FROM THE ORIGINAL DESIGN DRAWINGS AND ARE NOT GUARANTEED. THE CONTRACTOR SHALL TAKE ALL FIELD MEASUREMENTS NECESSARY TO ASSURE PROPER FIT OF THE FINISHED WORK AND SHALL ASSUME FULL RESPONSIBILITY FOR THEIR ACCURACY. WHEN SHOP DRAWINGS BASED ON FIELD MEASUREMENTS ARE SUBMITTED FOR REVIEW, THE FIELD MEASUREMENTS SHALL ALSO BE SUBMITTED FOR REFERENCE BY THE REVIEWER.

CLEARING AND GRUBBING: REMOVAL OF ALL BRUSH AND DEBRIS NECESSARY FOR ACCESS TO THE BRIDGE WILL NOT BE SPECIFICALLY MEASURED FOR PAYMENT BUT SHALL BE PAID FOR UNDER THE LUMP SUM ITEM "CLEARING AND GRUBBING".

TRAFFIC: ALL WORK SHALL BE DONE IN ACCORDANCE WITH THE SPECIAL PROVISIONS, "MAINTENANCE AND PROTECTION OF TRAFFIC" & " PROSECUTION AND PROGRESS". CONTRACTOR SHALL SUBMIT A CONSTRUCTION PROCEDURE DESCRIBING THE SCHEDULE AND DURATION OF WORK AND THE INTENDED SEQUENCE OF CONSTRUCTION.

UTILITIES: THERE ARE NO KNOWN PUBLIC UTILITIES.

CONCRETE NOTES

EXPOSED EDGES: EXPOSED EDGES OF CONCRETE SHALL BE BEVELED 1" x 1" UNLESS DIMENSIONED OTHERWISE.

CONCRETE COVER: ALL REINFORCEMENT SHALL HAVE 2" COVER UNLESS DIMENSIONED OTHERWISE.

ULTRA HIGH PERFORMANCE CONCRETE (UHPC): UHPC SHALL BE USED FOR BEAM END REPAIRS. SEE BEAM END REHABILITATION NOTES ON DRAWING NO. S-23 AND THE SPECIAL PROVISION FOR THE ITEM, "BEAM END REPAIRS WITH ULTRA HIGH PERFORMANCE CONCRETE - PARTIAL HEIGHT" FOR MORE DETAILS.

SURFACE REPAIR CONCRETE: SURFACE REPAIR CONCRETE SHALL BE USED FOR REPAIRS TO THE EXPOSED SURFACES OF ABUTMENTS AND PIERS AS DIRECTED BY THE ENGINEER.

EMBEDDED GALVANIC ANODES: EMBEDDED GALVANIC ANODES SHALL BE INSTALLED IN SURFACE REPAIR CONCRETE PATCHES AND AS DIRECTED BY THE ENGINEER.

REV.	DATE	REVISION DESCRIPTION	SHEET NO.

THE INFORMATION, INCLUDING ESTIMATED QUANTITIES OF WORK, SHOWN ON THESE SHEETS IS BASED ON LIMITED INVESTIGATIONS BY THE STATE AND IS IN NO WAY WARRANTED TO INDICATE THE CONDITIONS OF ACTUAL QUANTITIES OF WORK WHICH WILL BE REQUIRED.

Plotted Date: 1/12/2021

DESIGNER/DRAFTER: ECO
CHECKED BY: ZMK
SCALE AS NOTED

STATE OF CONNECTICUT
DEPARTMENT OF TRANSPORTATION

Filename: ...\0042-0325 General Plan.dgn

SIGNATURE/BLOCK: OFFICE OF ENGINEERING
APPROVED BY:

PROJECT TITLE: REHABILITATION OF BRIDGE NO. 05844A CARRYING I-84 OVER ROUTE 15

TOWN: EAST HARTFORD

DRAWING TITLE: GENERAL PLAN

PROJECT NO. 0042-0325
DRAWING NO. S-2
SHEET NO. 04.02

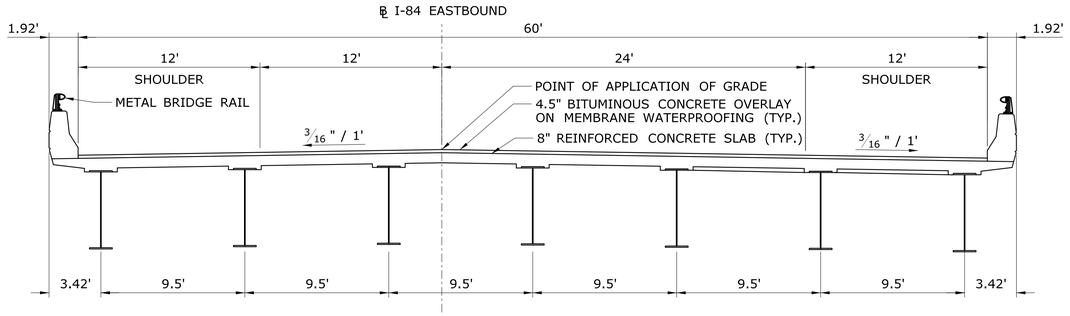

EXISTING TYPICAL SECTION A / S-2

SCALE: 1" = 5'

NOTICE TO BRIDGE INSPECTORS

THE DEPARTMENT'S BRIDGE SAFETY PROCEDURES REQUIRE THIS BRIDGE TO BE INSPECTED FOR, BUT NOT LIMITED TO, ALL APPROPRIATE COMPONENTS INDICATED IN THE GOVERNING MANUALS FOR BRIDGE INSPECTION. ATTENTION MUST BE GIVEN TO INSPECTING THE FOLLOWING SPECIAL COMPONENTS AND DETAILS. (THE LISTING FOR COMPONENTS FOR SPECIFIC ATTENTION SHALL NOT BE CONSTRUED TO REDUCE THE IMPORTANCE OF INSPECTION OF ANY OTHER COMPONENT OF THE STRUCTURE). THE FREQUENCY OF INSPECTION OF THIS STRUCTURE SHALL BE IN ACCORDANCE WITH THE GOVERNING MANUALS FOR BRIDGE INSPECTION, UNLESS OTHERWISE DIRECTED BY THE MANAGER OF BRIDGE SAFETY AND EVALUATION.

COMPONENT OR DETAIL	BRIDGE SHEET REFERENCE
FOLLOW NORMAL INSPECTION PROCEDURES	

INSPECTION OF FIELD WELDS

METHOD	UNIT	AMOUNT
ULTRASONIC	IN.	-
MAGNETIC PARTICLE	L.F.	-

DESCRIPTION OF WORK

1. CONSTRUCT ACCESS ROADS. SEE HIGHWAY PLANS FOR DETAILS.
2. REMOVE OVERHEAD SIGN STRUCTURE NO. 21611 LOCATED ABOVE PIER 5.
2. PERFORM SUBSTRUCTURE REPAIRS, PATCHING, AND REMOVE DEBRIS ON TOP OF PIER CAPS AS NOTED.
3. RECONSTRUCT SELECT CONCRETE HEADERS AND DECK ENDS. REPLACE SELECT JOINTS AS NOTED.
4. REMOVE SECTIONS OF THE END BEARING DIAPHRAGMS AT TO EACH BEAM THAT IS TO BE ENCASED IN ULTRA HIGH PERFORMANCE CONCRETE (UHPC). INSTALL NEW DIAPHRAGM SECTIONS ABOVE UHPC BLOCK. SEE DRAWING NO. S-27 FOR DETAILS.
5. CLEAN AREAS OF DETERIORATED STEEL AND PERFORM BEAM END REPAIRS WITH UHPC. PAINT PORTION OF EXISTING BEAM ENDS ABOVE THE UHPC BLOCK. SEE DRAWING NO. S-25 FOR DETAILS.
6. INSTALL PENETRATING SEALER PROTECTIVE COMPOUND ON PARAPET REVEALS WITHIN THE LIMITS SHOWN.
7. CLEAN EXISTING BRIDGE SCUPPERS, REMOVE HOLLOW CONCRETE ON THE UNDERSIDE OF SPANS 10 AND 11, CLEAN AND COAT EXPOSED REINFORCEMENT WITH ZINC PAINT.

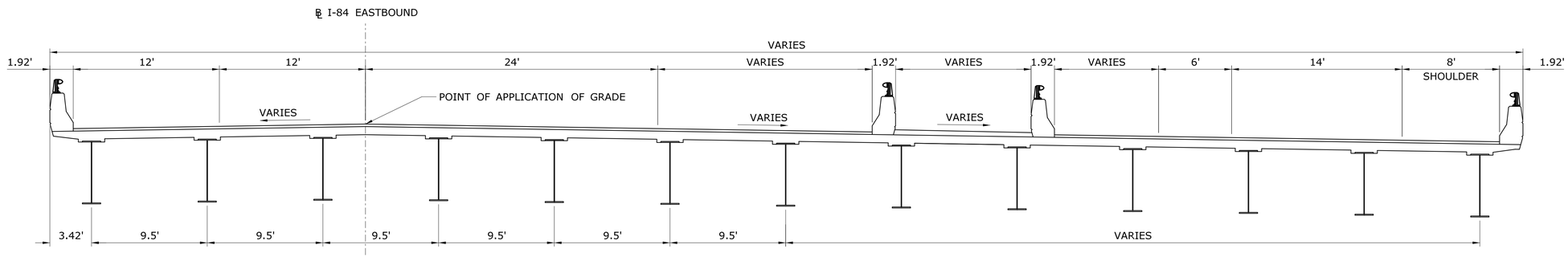

EXISTING TYPICAL SECTION B / S-2

SCALE: 1" = 5'

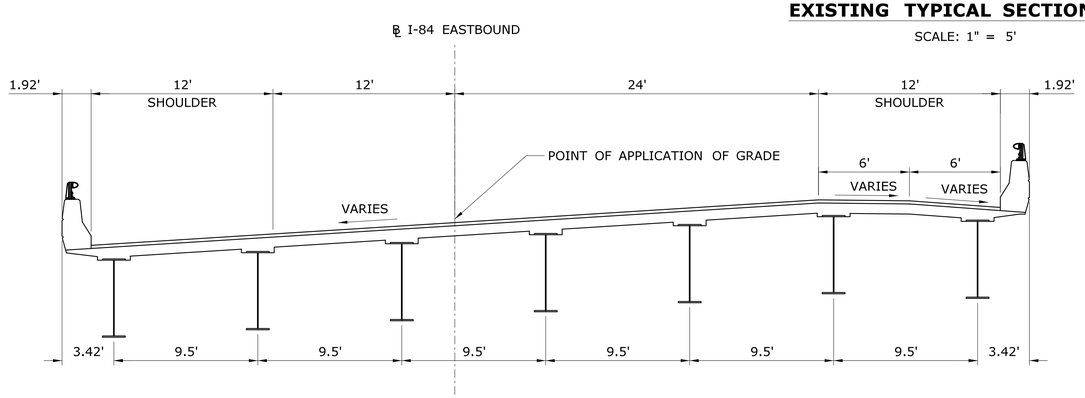

EXISTING TYPICAL SECTION C / S-2

SCALE: 1" = 5'

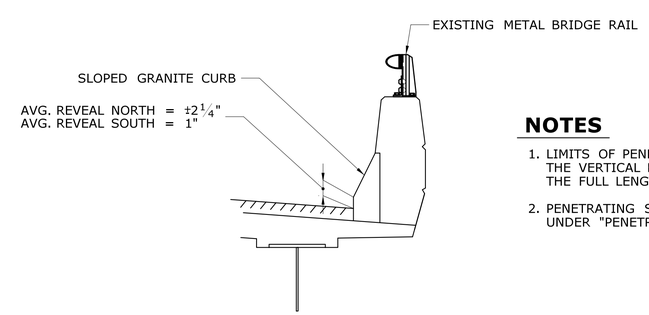

PENETRATING SEALER PROTECTIVE COMPOUND TYPICAL DETAIL

SCALE: ½" = 1'-0"

NOTES

1. LIMITS OF PENETRATING SEALER PROTECTIVE COMPOUND SHALL BE THE VERTICAL FACE OF THE SLOPED GRANITE CURB REVEAL ALONG THE FULL LENGTH OF THE BRIDGE.
2. PENETRATING SEALER PROTECTIVE COMPOUND SHALL BE PAID FOR UNDER "PENETRATING SEALER PROTECTIVE COMPOUND."

REV.	DATE	REVISION DESCRIPTION	SHEET NO.

THE INFORMATION, INCLUDING ESTIMATED QUANTITIES OF WORK, SHOWN ON THESE SHEETS IS BASED ON LIMITED INVESTIGATIONS BY THE STATE AND IS IN NO WAY WARRANTED TO INDICATE THE CONDITIONS OF ACTUAL QUANTITIES OF WORK WHICH WILL BE REQUIRED.

Plotted Date: 1/12/2021

DESIGNER/DRAFTER: ECO
CHECKED BY: ZMK
SCALE AS NOTED

STATE OF CONNECTICUT
DEPARTMENT OF TRANSPORTATION

Filename: ..\0042-0325 Typical Section.dgn

SIGNATURE/BLOCK: OFFICE OF ENGINEERING
APPROVED BY:

PROJECT TITLE: REHABILITATION OF BRIDGE NO. 05844A CARRYING I-84 OVER ROUTE 15

TOWN: EAST HARTFORD

DRAWING TITLE: TYPICAL EXISTING SECTIONS

PROJECT NO. 0042-0325
DRAWING NO. S-3
SHEET NO. 04.03

NOTES

1. FOR EXISTING DETAILS AND DIMENSIONS NOT SHOWN, REFER TO EXISTING PLANS IN SUBSET 06.
2. SEE DRAWING NOS. S-17 AND S-18 FOR CONCRETE REPAIR DETAILS.
3. ANY DEBRIS THAT EXISTS ON TOP OF THE PIER CAPS AND ABUTMENTS SHALL BE REMOVED BY THE CONTRACTOR AND DISPOSED OF SAFELY AS DIRECTED BY THE ENGINEER. THE COST OF PERFORMING THIS DEBRIS REMOVAL IS INCLUDED IN THE GENERAL COST OF THE WORK. ANY BIRD GUANO OR CONTAMINATED MATERIAL FOUND WITHIN THE DEBRIS SHALL PAID FOR UNDER THE ITEM "GUANO ABATEMENT".
4. THE SUBSTRUCTURE DETERIORATION AND REPAIR DIMENSIONS SHOWN ARE BASED ON LIMITED FIELD OPERATIONS AND BRIDGE SAFETY INSPECTION REPORT. THE INFORMATION IS INTENDED TO BE USED AS A GUIDE AND DOES NOT NECESSARILY REFLECT THE CURRENT CONDITION OF THE STRUCTURE. THE EXACT LOCATION AND LIMITS OF DETERIORATED CONCRETE TO BE REPAIRED SHALL BE DETERMINED BY THE ENGINEER DURING CONSTRUCTION.

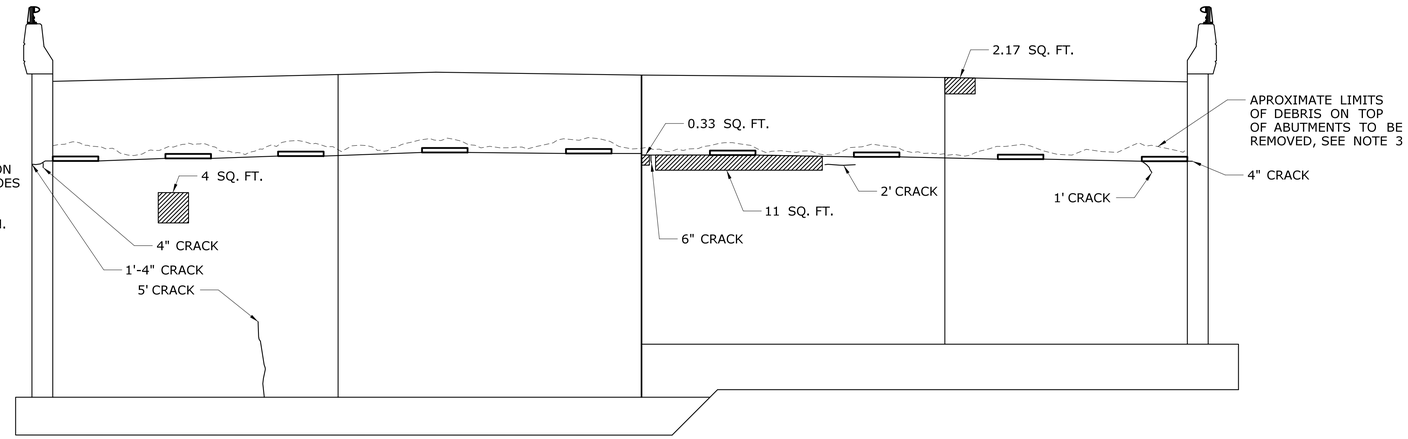

ABUTMENT 1

SCALE 1" = 5'

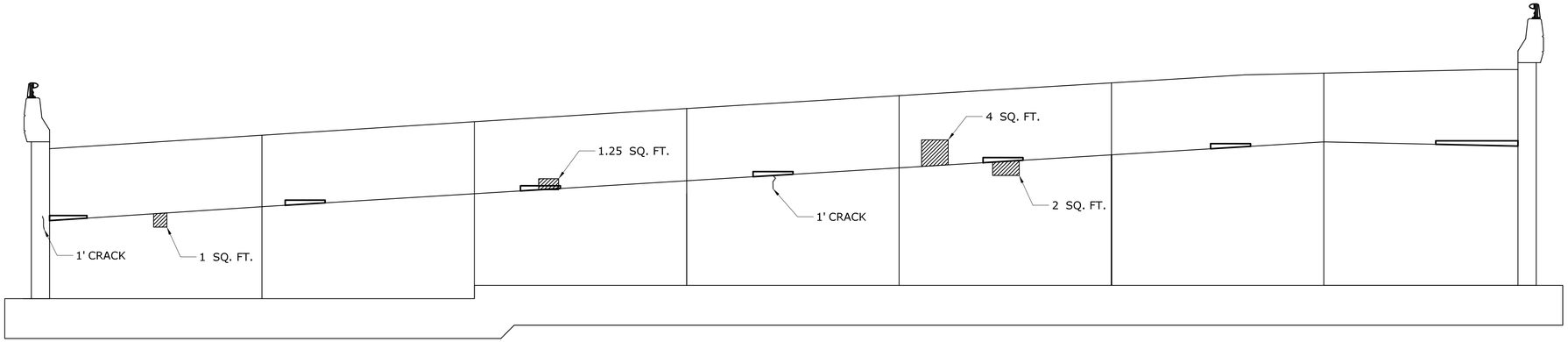

ABUTMENT 2

SCALE 1" = 5'

LEGEND

- SURFACE REPAIR CONCRETE PATCH
- PATCH WITH CLASS PCC04481
- CRACK

REV.	DATE	REVISION DESCRIPTION	SHEET NO.

THE INFORMATION, INCLUDING ESTIMATED QUANTITIES OF WORK, SHOWN ON THESE SHEETS IS BASED ON LIMITED INVESTIGATIONS BY THE STATE AND IS IN NO WAY WARRANTED TO INDICATE THE CONDITIONS OF ACTUAL QUANTITIES OF WORK WHICH WILL BE REQUIRED.

Plotted Date: 1/12/2021

DESIGNER/DRAFTER: -

CHECKED BY: ZMK

SCALE AS NOTED

STATE OF CONNECTICUT
DEPARTMENT OF TRANSPORTATION

Filename: ..\0042-0325 Elevation Abutments 1 and 2.dgn

SIGNATURE/BLOCK: **OFFICE OF ENGINEERING**

APPROVED BY: Andrew J Cardinali

PROJECT TITLE: **REHABILITATION OF BRIDGE NO. 05844A CARRYING I-84 OVER ROUTE 15**

TOWN: **EAST HARTFORD**

DRAWING TITLE: **ELEVATION ABUTMENTS 1 & 2**

PROJECT NO. **0042-0325**

DRAWING NO. **S-4**

SHEET NO. **04.04**

NOTES

1. FOR EXISTING DETAILS AND DIMENSIONS NOT SHOWN, REFER TO EXISTING PLANS IN SUBSET 06.
2. SEE DRAWING NOS. S-17 AND S-18 FOR CONCRETE REPAIR DETAILS.
3. ANY DEBRIS THAT EXISTS ON TOP OF THE PIER CAPS AND ABUTMENTS SHALL BE REMOVED BY THE CONTRACTOR AND DISPOSED OF SAFELY AS DIRECTED BY THE ENGINEER. THE COST OF PERFORMING THIS DEBRIS REMOVAL IS INCLUDED IN THE GENERAL COST OF THE WORK. ANY BIRD GUANO OR CONTAMINATED MATERIAL FOUND WITHIN THE DEBRIS SHALL PAID FOR UNDER THE ITEM "GUANO ABATEMENT".
4. THE SUBSTRUCTURE DETERIORATION AND REPAIR DIMENSIONS SHOWN ARE BASED ON LIMITED FIELD OPERATIONS AND BRIDGE SAFETY INSPECTION REPORT. THE INFORMATION IS INTENDED TO BE USED AS A GUIDE AND DOES NOT NECESSARILY REFLECT THE CURRENT CONDITION OF THE STRUCTURE.THE EXACT LOCATION AND LIMITS OF DETERIORATED CONCRETE TO BE REPAIRED SHALL BE DETERMINED BY THE ENGINEER DURING CONSTRUCTION.

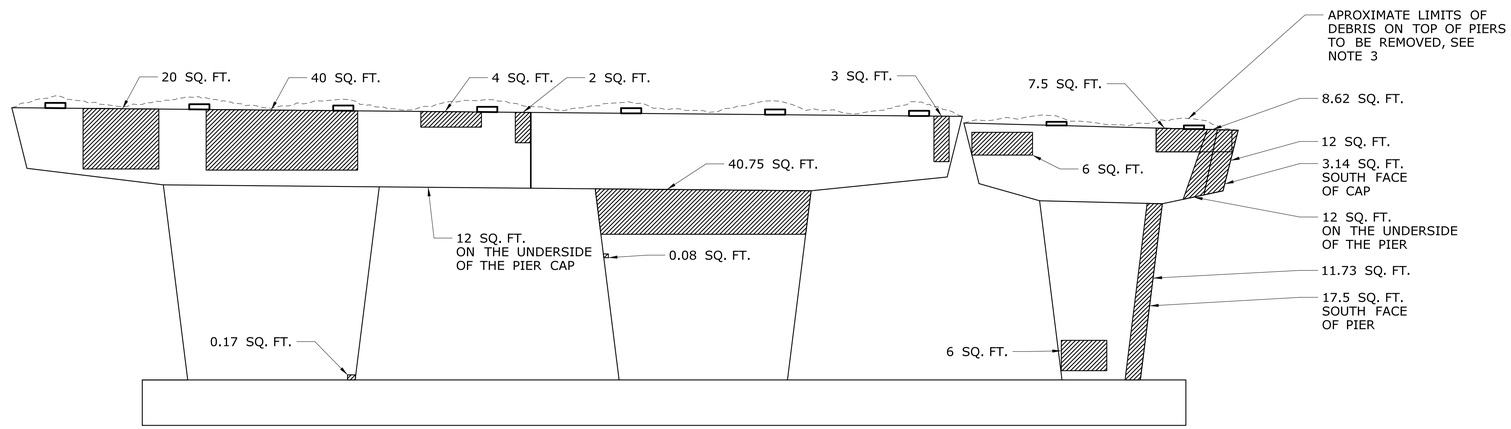

PIER 1 WEST ELEVATION

SCALE 1" = 5'

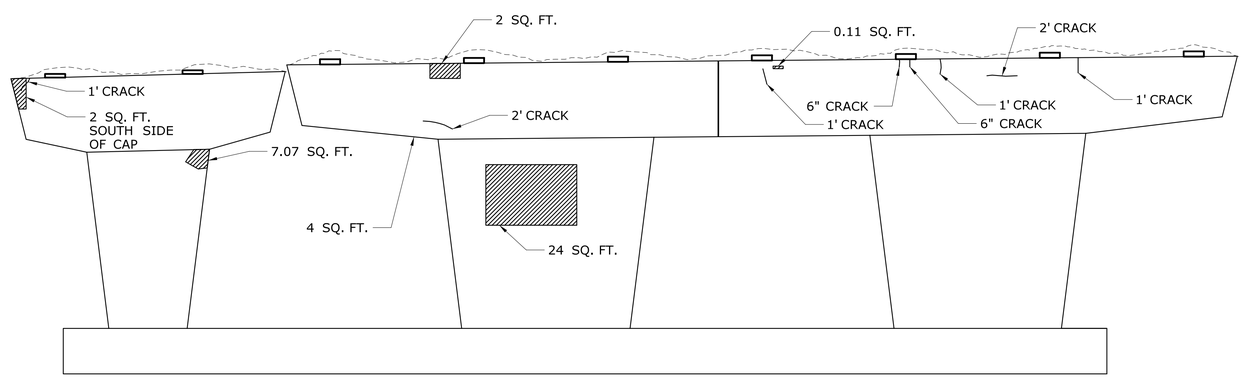

PIER 1 EAST ELEVATION

SCALE 1" = 5'

LEGEND

- SURFACE REPAIR CONCRETE PATCH
- PATCH WITH CLASS PCC04481
- CRACK

REV.	DATE	REVISION DESCRIPTION	SHEET NO.

THE INFORMATION, INCLUDING ESTIMATED QUANTITIES OF WORK, SHOWN ON THESE SHEETS IS BASED ON LIMITED INVESTIGATIONS BY THE STATE AND IS IN NO WAY WARRANTED TO INDICATE THE CONDITIONS OF ACTUAL QUANTITIES OF WORK WHICH WILL BE REQUIRED.

Plotted Date: 1/12/2021

DESIGNER/DRAFTER: ECO
CHECKED BY: ZMK
SCALE AS NOTED

STATE OF CONNECTICUT
DEPARTMENT OF TRANSPORTATION

Filename: ...\0042-0325 Elevation Pier 1.dgn

SIGNATURE/BLOCK:
OFFICE OF ENGINEERING
APPROVED BY:

PROJECT TITLE:
REHABILITATION OF BRIDGE NO. 05844A CARRYING I-84 OVER ROUTE 15

TOWN: **EAST HARTFORD**

DRAWING TITLE: **PIER 1 ELEVATION**

PROJECT NO. **0042-0325**
DRAWING NO. **S-5**
SHEET NO. **04.05**

NOTES

1. FOR EXISTING DETAILS AND DIMENSIONS NOT SHOWN, REFER TO EXISTING PLANS IN SUBSET 06.
2. SEE DRAWING NOS. S-17 AND S-18 FOR CONCRETE REPAIR DETAILS.
3. ANY DEBRIS THAT EXISTS ON TOP OF THE PIER CAPS AND ABUTMENTS SHALL BE REMOVED BY THE CONTRACTOR AND DISPOSED OF SAFELY AS DIRECTED BY THE ENGINEER. THE COST OF PERFORMING THIS DEBRIS REMOVAL IS INCLUDED IN THE GENERAL COST OF THE WORK. ANY BIRD GUANO OR CONTAMINATED MATERIAL FOUND WITHIN THE DEBRIS SHALL PAID FOR UNDER THE ITEM "GUANO ABATEMENT".
4. THE SUBSTRUCTURE DETERIORATION AND REPAIR DIMENSIONS SHOWN ARE BASED ON LIMITED FIELD OPERATIONS AND BRIDGE SAFETY INSPECTION REPORT. THE INFORMATION IS INTENDED TO BE USED AS A GUIDE AND DOES NOT NECESSARILY REFLECT THE CURRENT CONDITION OF THE STRUCTURE. THE EXACT LOCATION AND LIMITS OF DETERIORATED CONCRETE TO BE REPAIRED SHALL BE DETERMINED BY THE ENGINEER DURING CONSTRUCTION.

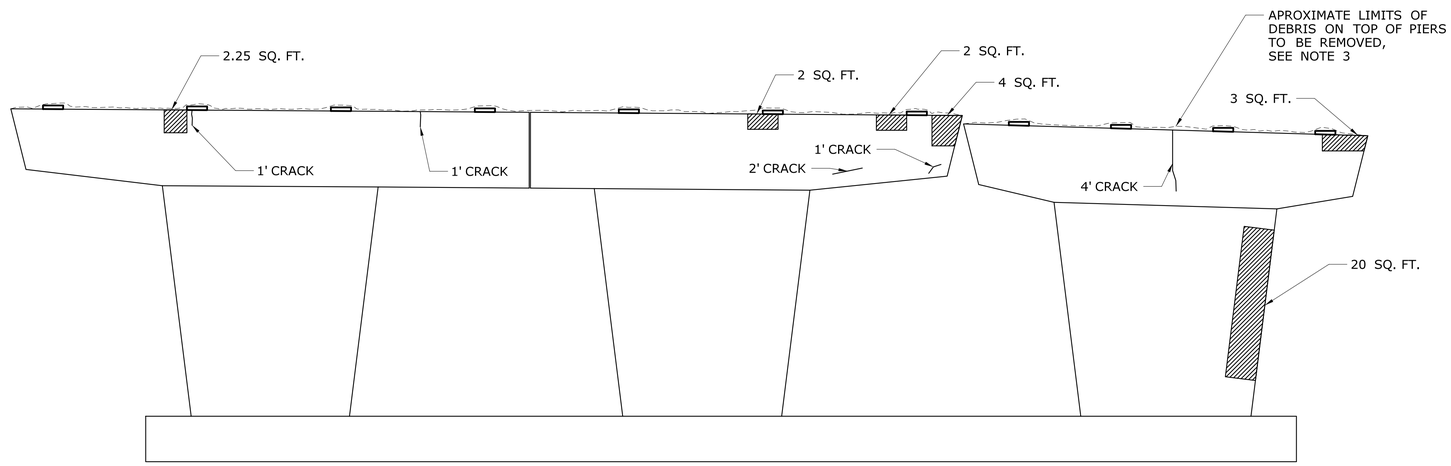

PIER 2 WEST ELEVATION

SCALE 1" = 5'

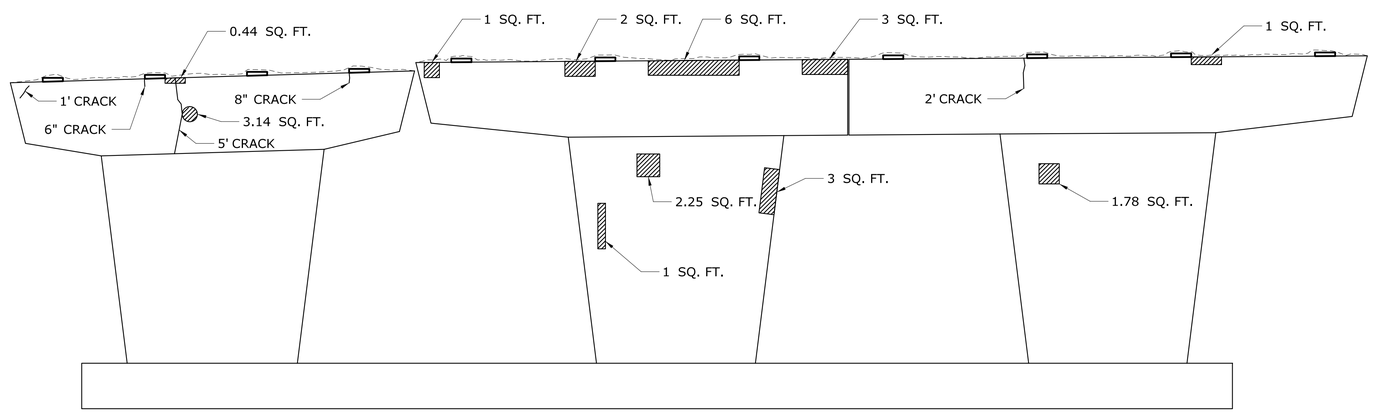

PIER 2 EAST ELEVATION

SCALE 1" = 5'

LEGEND

- SURFACE REPAIR CONCRETE PATCH
- PATCH WITH CLASS PCC04481
- CRACK

REV.	DATE	REVISION DESCRIPTION	SHEET NO.

THE INFORMATION, INCLUDING ESTIMATED QUANTITIES OF WORK, SHOWN ON THESE SHEETS IS BASED ON LIMITED INVESTIGATIONS BY THE STATE AND IS IN NO WAY WARRANTED TO INDICATE THE CONDITIONS OF ACTUAL QUANTITIES OF WORK WHICH WILL BE REQUIRED.

Plotted Date: 1/12/2021

DESIGNER/DRAFTER: ECO

CHECKED BY: ZMK

SCALE AS NOTED

STATE OF CONNECTICUT
DEPARTMENT OF TRANSPORTATION

Filename: ...\0042-0325 Elevation Pier 2.dgn

SIGNATURE/ BLOCK: **OFFICE OF ENGINEERING**

APPROVED BY:

PROJECT TITLE: **REHABILITATION OF BRIDGE NO. 05844A CARRYING I-84 OVER ROUTE 15**

TOWN: **EAST HARTFORD**

DRAWING TITLE: **PIER 2 ELEVATION**

PROJECT NO. **0042-0325**

DRAWING NO. **S-6**

SHEET NO. **04.06**

NOTES

1. FOR EXISTING DETAILS AND DIMENSIONS NOT SHOWN, REFER TO EXISTING PLANS IN SUBSET 06.
2. SEE DRAWING NOS. S-17 AND S-18 FOR CONCRETE REPAIR DETAILS.
3. ANY DEBRIS THAT EXISTS ON TOP OF THE PIER CAPS AND ABUTMENTS SHALL BE REMOVED BY THE CONTRACTOR AND DISPOSED OF SAFELY AS DIRECTED BY THE ENGINEER. THE COST OF PERFORMING THIS DEBRIS REMOVAL IS INCLUDED IN THE GENERAL COST OF THE WORK. ANY BIRD GUANO OR CONTAMINATED MATERIAL FOUND WITHIN THE DEBRIS SHALL PAID FOR UNDER THE ITEM "GUANO ABATEMENT".
4. THE SUBSTRUCTURE DETERIORATION AND REPAIR DIMENSIONS SHOWN ARE BASED ON LIMITED FIELD OPERATIONS AND BRIDGE SAFETY INSPECTION REPORT. THE INFORMATION IS INTENDED TO BE USED AS A GUIDE AND DOES NOT NECESSARILY REFLECT THE CURRENT CONDITION OF THE STRUCTURE. THE EXACT LOCATION AND LIMITS OF DETERIORATED CONCRETE TO BE REPAIRED SHALL BE DETERMINED BY THE ENGINEER DURING CONSTRUCTION.

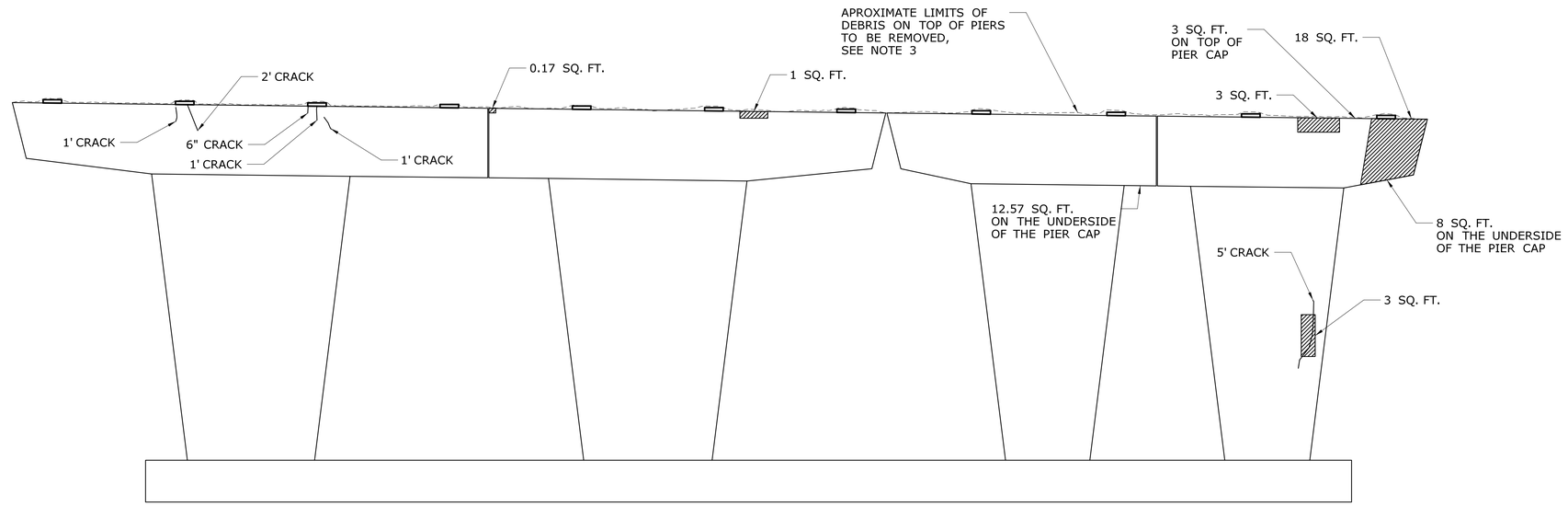

PIER 3 WEST ELEVATION

SCALE 1" = 5'

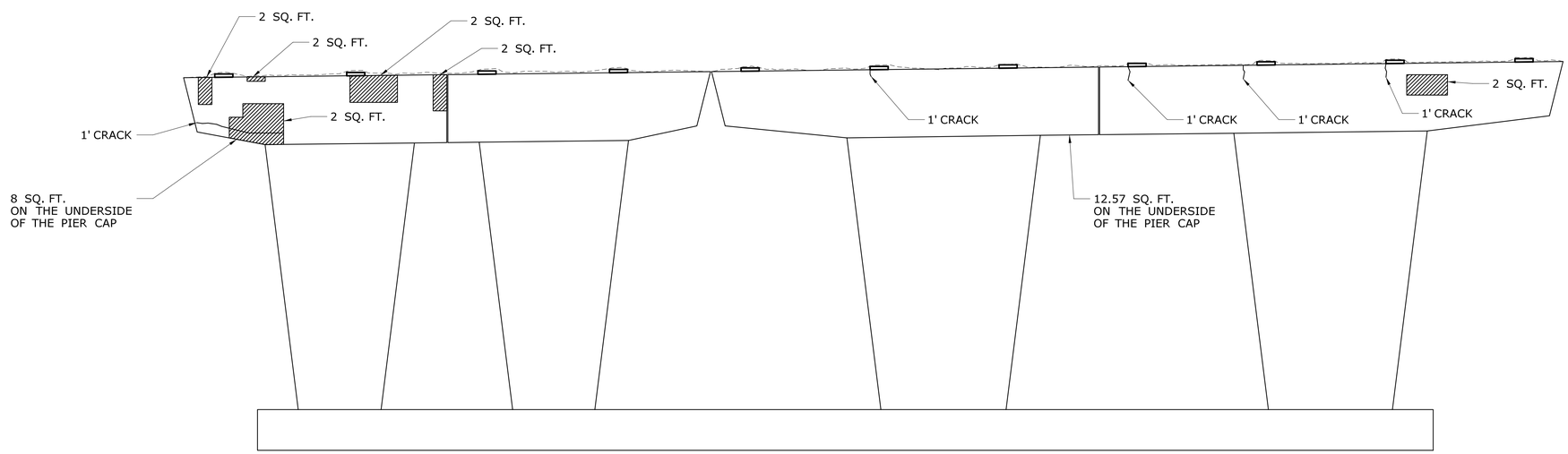

PIER 3 EAST ELEVATION

SCALE 1" = 5'

LEGEND

- SURFACE REPAIR CONCRETE PATCH
- PATCH WITH CLASS PCC04481
- CRACK

REV.	DATE	REVISION DESCRIPTION	SHEET NO.

THE INFORMATION, INCLUDING ESTIMATED QUANTITIES OF WORK, SHOWN ON THESE SHEETS IS BASED ON LIMITED INVESTIGATIONS BY THE STATE AND IS IN NO WAY WARRANTED TO INDICATE THE CONDITIONS OF ACTUAL QUANTITIES OF WORK WHICH WILL BE REQUIRED.

Plotted Date: 1/12/2021

DESIGNER/DRAFTER: ECO

CHECKED BY: ZMK

SCALE AS NOTED

STATE OF CONNECTICUT
DEPARTMENT OF TRANSPORTATION

Filename: ...\0042-0325 Elevation Pier 3.dgn

SIGNATURE/BLOCK:

OFFICE OF ENGINEERING

APPROVED BY:

Andrew J Cardulli

PROJECT TITLE:

REHABILITATION OF BRIDGE NO. 05844A CARRYING I-84 OVER ROUTE 15

TOWN: **EAST HARTFORD**

DRAWING TITLE: **PIER 3 ELEVATION**

PROJECT NO. **0042-0325**

DRAWING NO. **S-7**

SHEET NO. **04.07**

NOTES

1. FOR EXISTING DETAILS AND DIMENSIONS NOT SHOWN, REFER TO EXISTING PLANS IN SUBSET 06.
2. SEE DRAWING NOS. S-17 AND S-18 FOR CONCRETE REPAIR DETAILS.
3. ANY DEBRIS THAT EXISTS ON TOP OF THE PIER CAPS AND ABUTMENTS SHALL BE REMOVED BY THE CONTRACTOR AND DISPOSED OF SAFELY AS DIRECTED BY THE ENGINEER. THE COST OF PERFORMING THIS DEBRIS REMOVAL IS INCLUDED IN THE GENERAL COST OF THE WORK. ANY BIRD GUANO OR CONTAMINATED MATERIAL FOUND WITHIN THE DEBRIS SHALL PAID FOR UNDER THE ITEM "GUANO ABATEMENT".
4. THE SUBSTRUCTURE DETERIORATION AND REPAIR DIMENSIONS SHOWN ARE BASED ON LIMITED FIELD OPERATIONS AND BRIDGE SAFETY INSPECTION REPORT. THE INFORMATION IS INTENDED TO BE USED AS A GUIDE AND DOES NOT NECESSARILY REFLECT THE CURRENT CONDITION OF THE STRUCTURE. THE EXACT LOCATION AND LIMITS OF DETERIORATED CONCRETE TO BE REPAIRED SHALL BE DETERMINED BY THE ENGINEER DURING CONSTRUCTION.

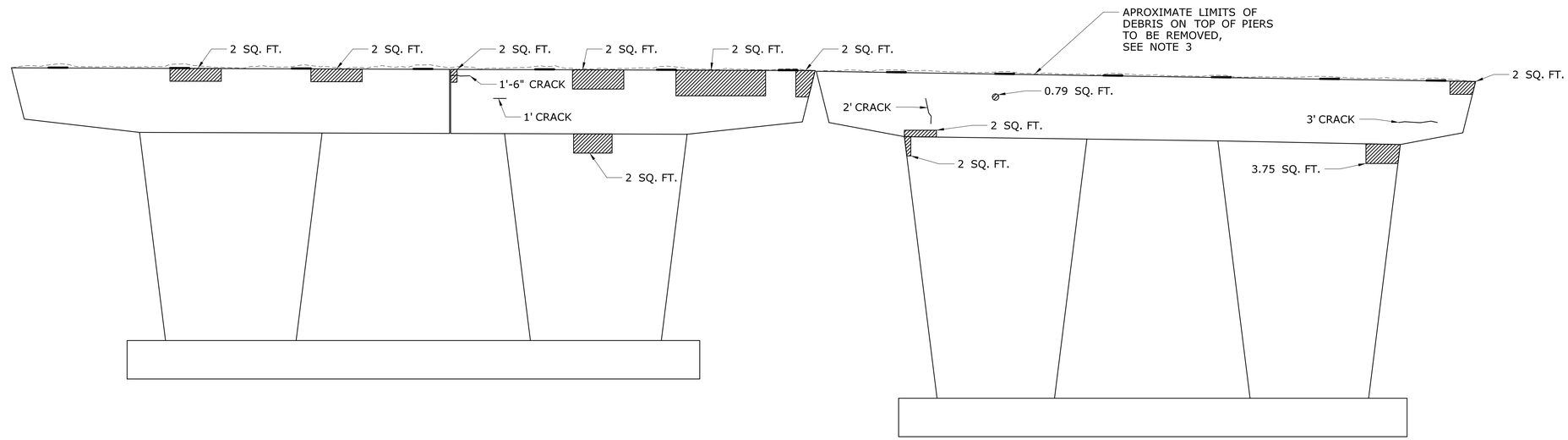

PIER 4 WEST ELEVATION

SCALE 1" = 5'

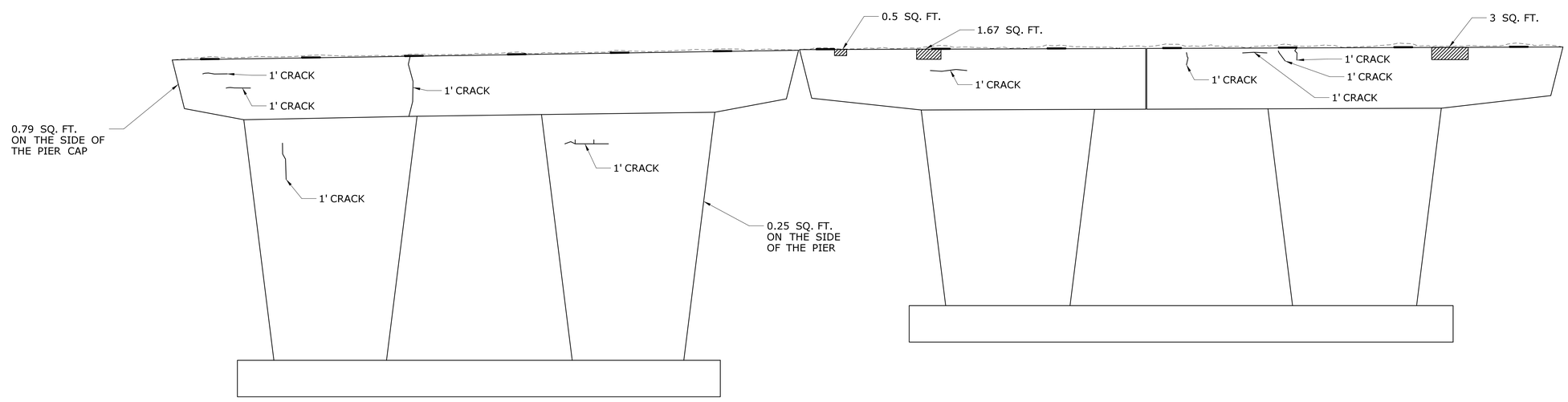

PIER 4 EAST ELEVATION

SCALE 1" = 5'

LEGEND

- SURFACE REPAIR CONCRETE PATCH
- PATCH WITH CLASS PCC04481
- CRACK

REV.	DATE	REVISION DESCRIPTION	SHEET NO.

THE INFORMATION, INCLUDING ESTIMATED QUANTITIES OF WORK, SHOWN ON THESE SHEETS IS BASED ON LIMITED INVESTIGATIONS BY THE STATE AND IS IN NO WAY WARRANTED TO INDICATE THE CONDITIONS OF ACTUAL QUANTITIES OF WORK WHICH WILL BE REQUIRED.

Plotted Date: 1/12/2021

DESIGNER/DRAFTER: ECO
CHECKED BY: ZMK
SCALE AS NOTED

STATE OF CONNECTICUT
DEPARTMENT OF TRANSPORTATION

Filename: ...\0042-0325 Elevation Pier 4.dgn

SIGNATURE/BLOCK:
OFFICE OF ENGINEERING
APPROVED BY:
Andrew J Cardulli

PROJECT TITLE:
REHABILITATION OF BRIDGE NO. 05844A CARRYING I-84 OVER ROUTE 15

TOWN: **EAST HARTFORD**

DRAWING TITLE: **PIER 4 ELEVATION**

PROJECT NO. **0042-0325**
DRAWING NO. **S-8**
SHEET NO. **04.08**

NOTES

1. FOR EXISTING DETAILS AND DIMENSIONS NOT SHOWN, REFER TO EXISTING PLANS IN SUBSET 06.
2. SEE DRAWING NOS. S-17 AND S-18 FOR CONCRETE REPAIR DETAILS.
3. ANY DEBRIS THAT EXISTS ON TOP OF THE PIER CAPS AND ABUTMENTS SHALL BE REMOVED BY THE CONTRACTOR AND DISPOSED OF SAFELY AS DIRECTED BY THE ENGINEER. THE COST OF PERFORMING THIS DEBRIS REMOVAL IS INCLUDED IN THE GENERAL COST OF THE WORK. ANY BIRD GUANO OR CONTAMINATED MATERIAL FOUND WITHIN THE DEBRIS SHALL PAID FOR UNDER THE ITEM "GUANO ABATEMENT".
4. THE SUBSTRUCTURE DETERIORATION AND REPAIR DIMENSIONS SHOWN ARE BASED ON LIMITED FIELD OPERATIONS AND BRIDGE SAFETY INSPECTION REPORT. THE INFORMATION IS INTENDED TO BE USED AS A GUIDE AND DOES NOT NECESSARILY REFLECT THE CURRENT CONDITION OF THE STRUCTURE. THE EXACT LOCATION AND LIMITS OF DETERIORATED CONCRETE TO BE REPAIRED SHALL BE DETERMINED BY THE ENGINEER DURING CONSTRUCTION.

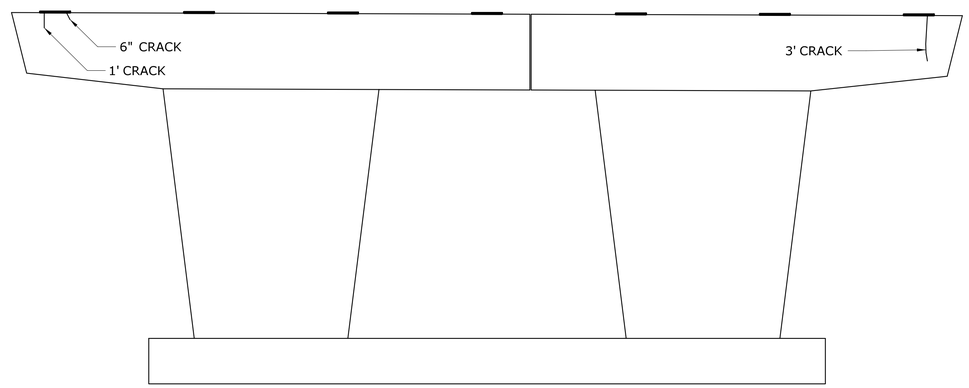

PIER 5 WEST ELEVATION

SCALE 1" = 5'

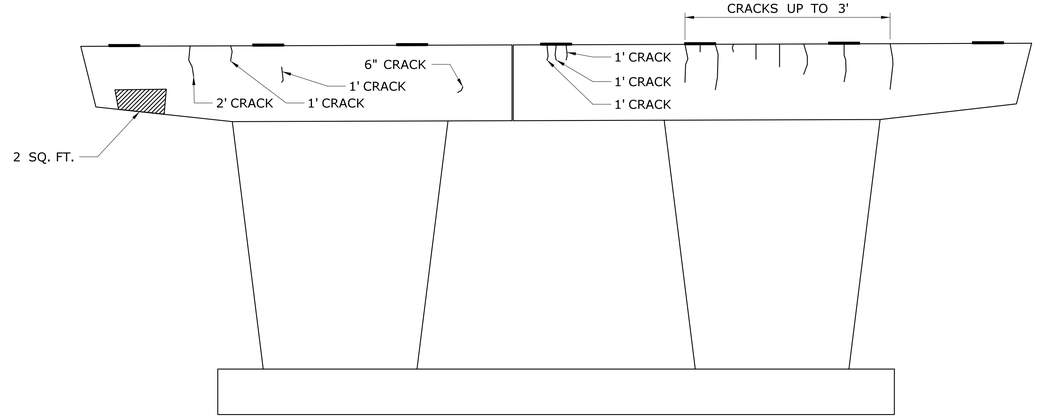

PIER 5 EAST ELEVATION

SCALE 1" = 5'

LEGEND

- SURFACE REPAIR CONCRETE PATCH
- PATCH WITH CLASS PCC04481
- CRACK

REV.	DATE	REVISION DESCRIPTION	SHEET NO.

THE INFORMATION, INCLUDING ESTIMATED QUANTITIES OF WORK, SHOWN ON THESE SHEETS IS BASED ON LIMITED INVESTIGATIONS BY THE STATE AND IS IN NO WAY WARRANTED TO INDICATE THE CONDITIONS OF ACTUAL QUANTITIES OF WORK WHICH WILL BE REQUIRED.

Plotted Date: 1/12/2021

DESIGNER/DRAFTER: RCD

CHECKED BY: ZMK

SCALE AS NOTED

STATE OF CONNECTICUT
DEPARTMENT OF TRANSPORTATION

Filename: ...\0042-0325 Elevation Pier 5.dgn

SIGNATURE/BLOCK:

OFFICE OF ENGINEERING

APPROVED BY:

Andrew J Cardinali

PROJECT TITLE:

REHABILITATION OF BRIDGE NO. 05844A CARRYING I-84 OVER ROUTE 15

TOWN: **EAST HARTFORD**

DRAWING TITLE: **PIER 5 ELEVATION**

PROJECT NO. **0042-0325**

DRAWING NO. **S-9**

SHEET NO. **04.09**

NOTES

1. FOR EXISTING DETAILS AND DIMENSIONS NOT SHOWN, REFER TO EXISTING PLANS IN SUBSET 06.
2. SEE DRAWING NOS. S-17 AND S-18 FOR CONCRETE REPAIR DETAILS.
3. ANY DEBRIS THAT EXISTS ON TOP OF THE PIER CAPS AND ABUTMENTS SHALL BE REMOVED BY THE CONTRACTOR AND DISPOSED OF SAFELY AS DIRECTED BY THE ENGINEER. THE COST OF PERFORMING THIS DEBRIS REMOVAL IS INCLUDED IN THE GENERAL COST OF THE WORK. ANY BIRD GUANO OR CONTAMINATED MATERIAL FOUND WITHIN THE DEBRIS SHALL PAID FOR UNDER THE ITEM "GUANO ABATEMENT".
4. THE SUBSTRUCTURE DETERIORATION AND REPAIR DIMENSIONS SHOWN ARE BASED ON LIMITED FIELD OPERATIONS AND BRIDGE SAFETY INSPECTION REPORT. THE INFORMATION IS INTENDED TO BE USED AS A GUIDE AND DOES NOT NECESSARILY REFLECT THE CURRENT CONDITION OF THE STRUCTURE. THE EXACT LOCATION AND LIMITS OF DETERIORATED CONCRETE TO BE REPAIRED SHALL BE DETERMINED BY THE ENGINEER DURING CONSTRUCTION.

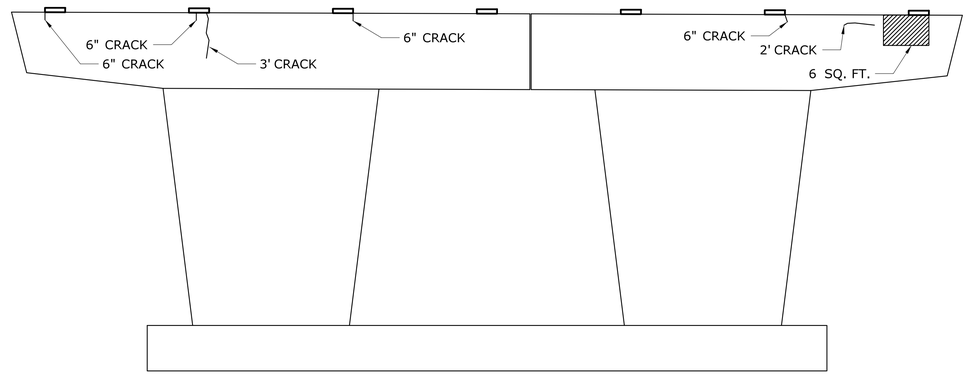

PIER 8 WEST ELEVATION

SCALE 1" = 5'

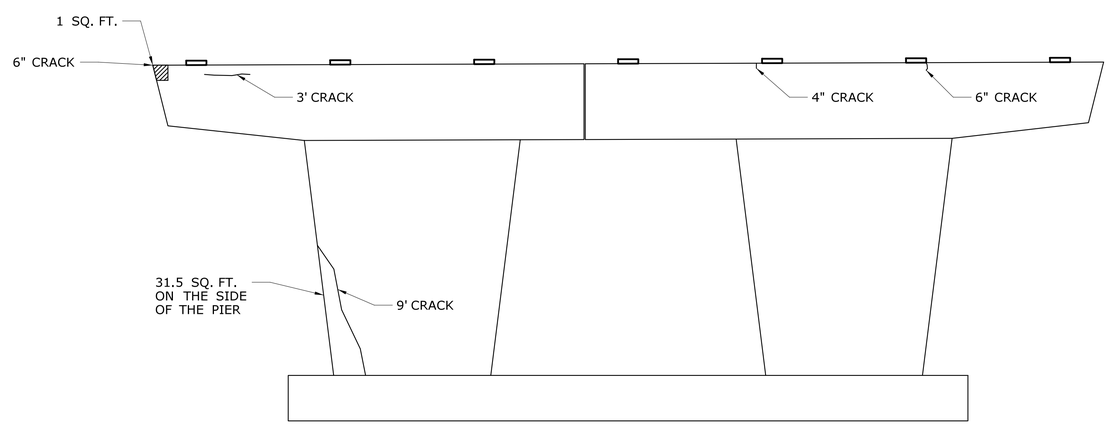

PIER 8 EAST ELEVATION

SCALE 1" = 5'

LEGEND

- SURFACE REPAIR CONCRETE PATCH
- PATCH WITH CLASS PCC04481
- CRACK

REV.	DATE	REVISION DESCRIPTION	SHEET NO.

THE INFORMATION, INCLUDING ESTIMATED QUANTITIES OF WORK, SHOWN ON THESE SHEETS IS BASED ON LIMITED INVESTIGATIONS BY THE STATE AND IS IN NO WAY WARRANTED TO INDICATE THE CONDITIONS OF ACTUAL QUANTITIES OF WORK WHICH WILL BE REQUIRED.

Plotted Date: 1/12/2021

DESIGNER/DRAFTER: ECO

CHECKED BY: ZMK

SCALE AS NOTED

STATE OF CONNECTICUT
DEPARTMENT OF TRANSPORTATION

Filename: ...\0042-0325 Elevation Pier 8.dgn

SIGNATURE/BLOCK:
OFFICE OF ENGINEERING

APPROVED BY:

PROJECT TITLE:
REHABILITATION OF BRIDGE NO. 05844A CARRYING I-84 OVER ROUTE 15

TOWN: **EAST HARTFORD**

DRAWING TITLE: **PIER 8 ELEVATION**

PROJECT NO. **0042-0325**

DRAWING NO. **S-10**

SHEET NO. **04.10**

NOTES

1. FOR EXISTING DETAILS AND DIMENSIONS NOT SHOWN, REFER TO EXISTING PLANS IN SUBSET 06.
2. SEE DRAWING NOS. S-17 AND S-18 FOR CONCRETE REPAIR DETAILS.
3. ANY DEBRIS THAT EXISTS ON TOP OF THE PIER CAPS AND ABUTMENTS SHALL BE REMOVED BY THE CONTRACTOR AND DISPOSED OF SAFELY AS DIRECTED BY THE ENGINEER. THE COST OF PERFORMING THIS DEBRIS REMOVAL IS INCLUDED IN THE GENERAL COST OF THE WORK. ANY BIRD GUANO OR CONTAMINATED MATERIAL FOUND WITHIN THE DEBRIS SHALL PAID FOR UNDER THE ITEM "GUANO ABATEMENT".
4. THE SUBSTRUCTURE DETERIORATION AND REPAIR DIMENSIONS SHOWN ARE BASED ON LIMITED FIELD OPERATIONS AND BRIDGE SAFETY INSPECTION REPORT. THE INFORMATION IS INTENDED TO BE USED AS A GUIDE AND DOES NOT NECESSARILY REFLECT THE CURRENT CONDITION OF THE STRUCTURE. THE EXACT LOCATION AND LIMITS OF DETERIORATED CONCRETE TO BE REPAIRED SHALL BE DETERMINED BY THE ENGINEER DURING CONSTRUCTION.

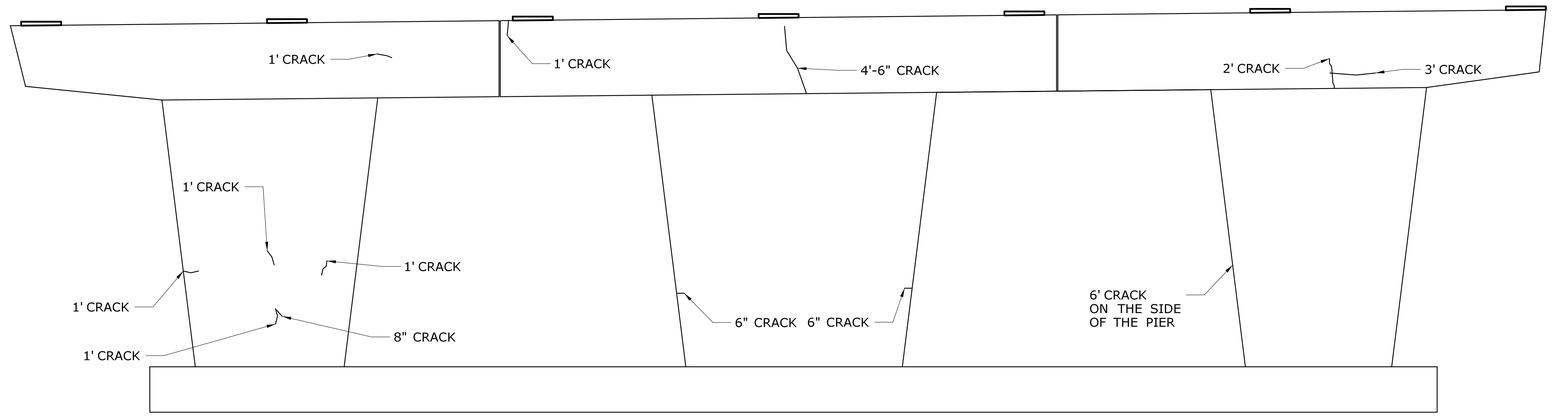

PIER 9 WEST ELEVATION

SCALE 1" = 5'

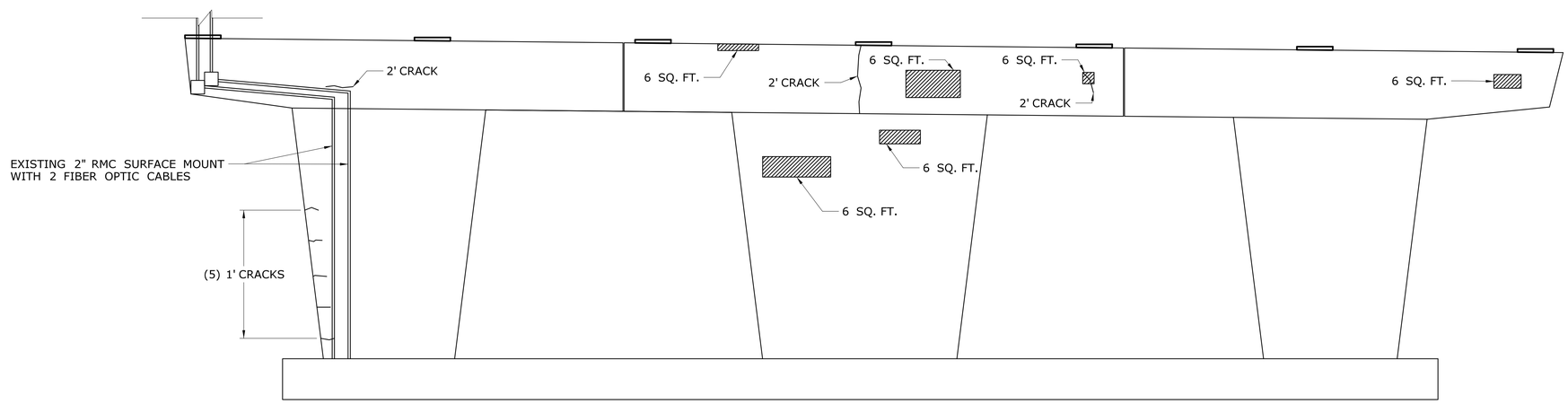

PIER 9 EAST ELEVATION

SCALE 1" = 5'

LEGEND

- SURFACE REPAIR CONCRETE PATCH
- PATCH WITH CLASS PCC04481
- CRACK

REV.	DATE	REVISION DESCRIPTION	SHEET NO.

THE INFORMATION, INCLUDING ESTIMATED QUANTITIES OF WORK, SHOWN ON THESE SHEETS IS BASED ON LIMITED INVESTIGATIONS BY THE STATE AND IS IN NO WAY WARRANTED TO INDICATE THE CONDITIONS OF ACTUAL QUANTITIES OF WORK WHICH WILL BE REQUIRED.

Plotted Date: 1/12/2021

DESIGNER/DRAFTER: ECO

CHECKED BY: ZMK

SCALE AS NOTED

STATE OF CONNECTICUT
DEPARTMENT OF TRANSPORTATION

Filename: ...\0042-0325 Elevation Pier 9.dgn

SIGNATURE/ BLOCK:

OFFICE OF ENGINEERING

APPROVED BY:

PROJECT TITLE:

REHABILITATION OF BRIDGE NO. 05844A CARRYING I-84 OVER ROUTE 15

TOWN: **EAST HARTFORD**

DRAWING TITLE: **PIER 9 ELEVATION**

PROJECT NO. **0042-0325**

DRAWING NO. **S-11**

SHEET NO. **04.11**

NOTES

1. FOR EXISTING DETAILS AND DIMENSIONS NOT SHOWN, REFER TO EXISTING PLANS IN SUBSET 06.
2. SEE DRAWING NOS. S-17 AND S-18 FOR CONCRETE REPAIR DETAILS.
3. ANY DEBRIS THAT EXISTS ON TOP OF THE PIER CAPS AND ABUTMENTS SHALL BE REMOVED BY THE CONTRACTOR AND DISPOSED OF SAFELY AS DIRECTED BY THE ENGINEER. THE COST OF PERFORMING THIS DEBRIS REMOVAL IS INCLUDED IN THE GENERAL COST OF THE WORK. ANY BIRD GUANO OR CONTAMINATED MATERIAL FOUND WITHIN THE DEBRIS SHALL PAID FOR UNDER THE ITEM "GUANO ABATEMENT".
4. THE SUBSTRUCTURE DETERIORATION AND REPAIR DIMENSIONS SHOWN ARE BASED ON LIMITED FIELD OPERATIONS AND BRIDGE SAFETY INSPECTION REPORT. THE INFORMATION IS INTENDED TO BE USED AS A GUIDE AND DOES NOT NECESSARILY REFLECT THE CURRENT CONDITION OF THE STRUCTURE. THE EXACT LOCATION AND LIMITS OF DETERIORATED CONCRETE TO BE REPAIRED SHALL BE DETERMINED BY THE ENGINEER DURING CONSTRUCTION.

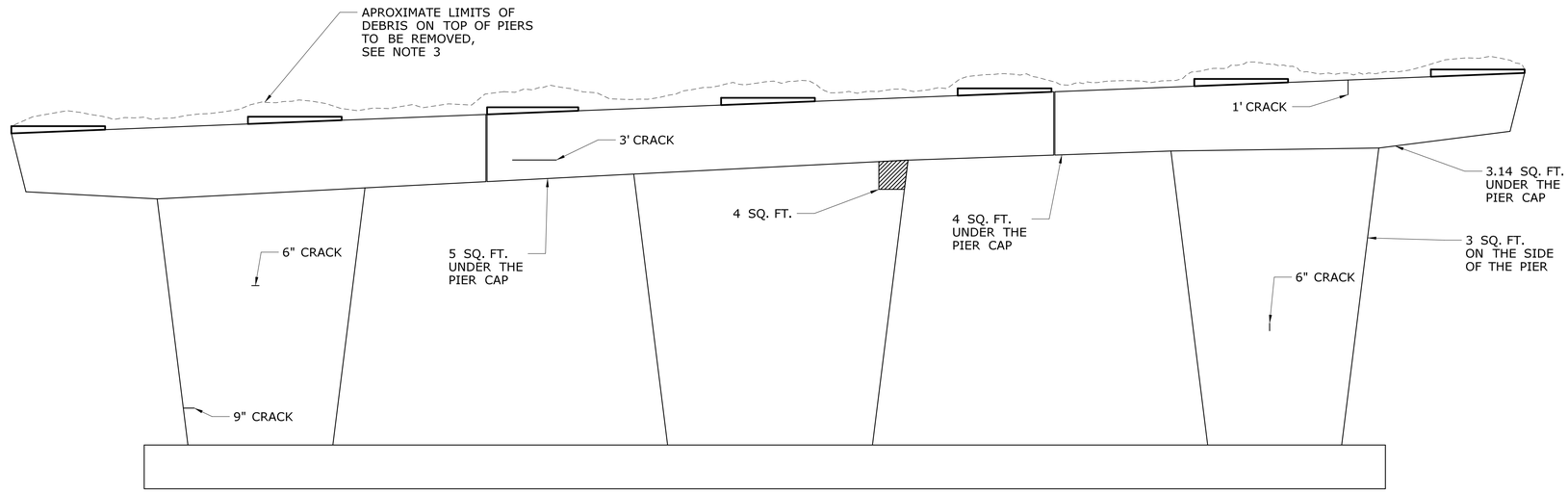

PIER 11 WEST ELEVATION

SCALE 1" = 5'

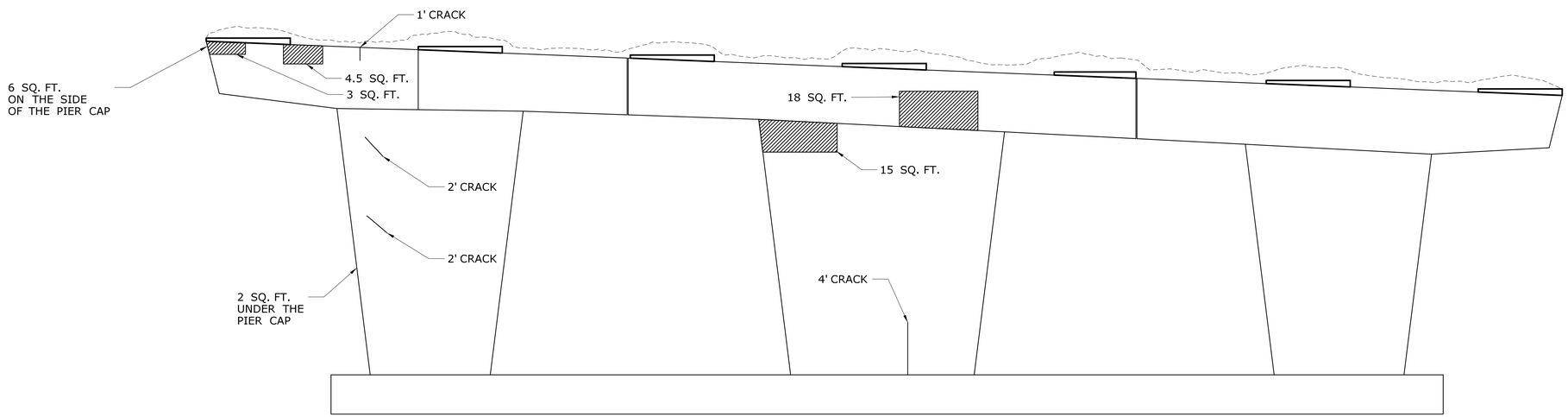

PIER 11 EAST ELEVATION

SCALE 1" = 5'

LEGEND

- SURFACE REPAIR CONCRETE PATCH
- PATCH WITH CLASS PCC04481
- CRACK

REV.	DATE	REVISION DESCRIPTION	SHEET NO.

THE INFORMATION, INCLUDING ESTIMATED QUANTITIES OF WORK, SHOWN ON THESE SHEETS IS BASED ON LIMITED INVESTIGATIONS BY THE STATE AND IS IN NO WAY WARRANTED TO INDICATE THE CONDITIONS OF ACTUAL QUANTITIES OF WORK WHICH WILL BE REQUIRED.

Plotted Date: 1/12/2021

DESIGNER/DRAFTER: ECO

CHECKED BY: ZMK

SCALE AS NOTED

STATE OF CONNECTICUT
DEPARTMENT OF TRANSPORTATION

Filename: ...\0042-0325 Elevation Pier 11.dgn

SIGNATURE/ BLOCK:

OFFICE OF ENGINEERING

APPROVED BY:

Andrew J Cardinali

PROJECT TITLE:

REHABILITATION OF BRIDGE NO. 05844A CARRYING I-84 OVER ROUTE 15

TOWN: **EAST HARTFORD**

DRAWING TITLE: **PIER 11 ELEVATION**

PROJECT NO. **0042-0325**

DRAWING NO. **S-12**

SHEET NO. **04.12**

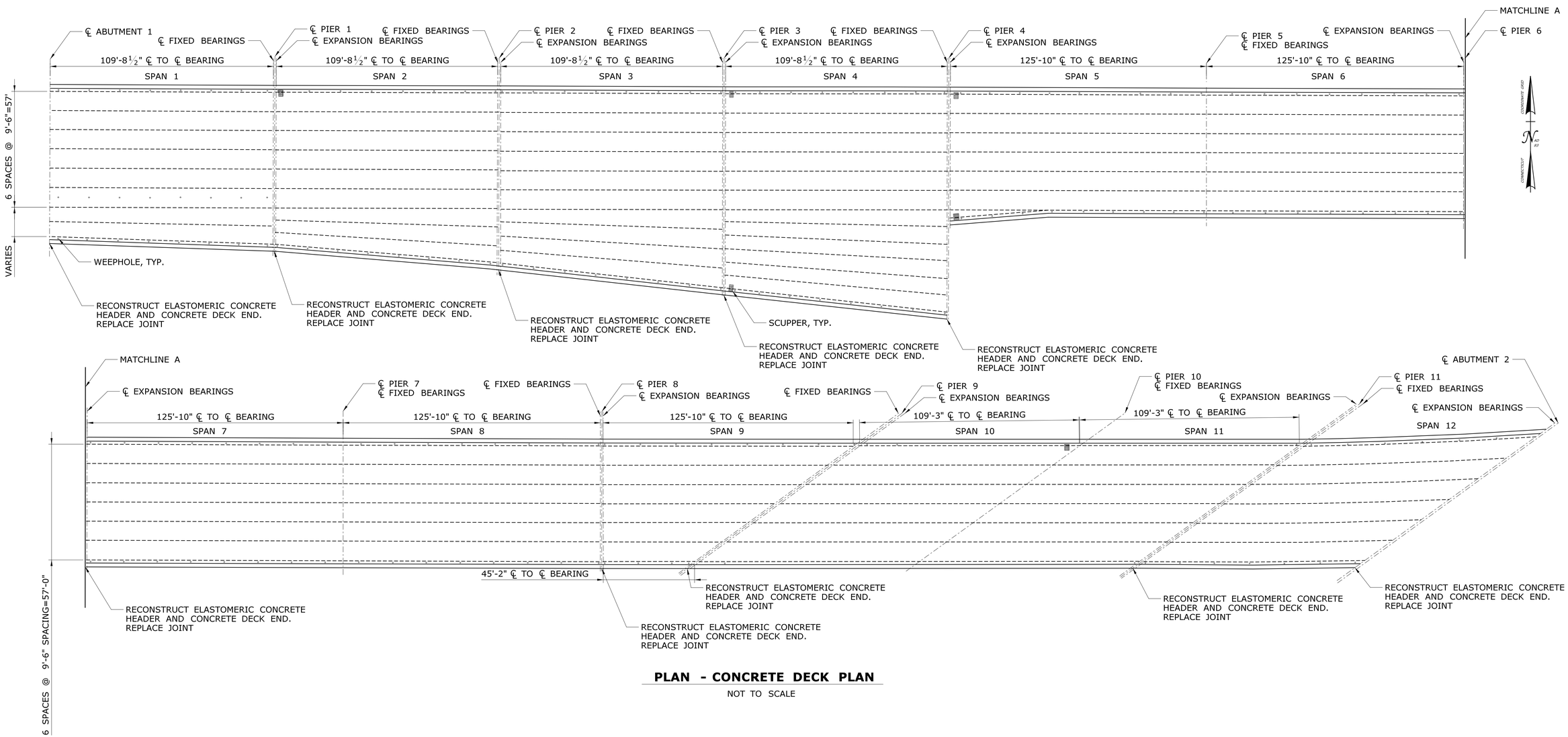

PLAN - CONCRETE DECK PLAN

NOT TO SCALE

CONCRETE DECK PLAN NOTES

1. THE CONCRETE DECK PLAN HAS BEEN PREPARED BASED ON INFORMATION GATHERED DURING FIELD INSPECTION AND FROM THE EXISTING BRIDGE PLANS. ACTUAL FIELD CONDITIONS MAY VARY AND MAY REQUIRE MODIFICATIONS TO CONSTRUCTION DETAILS AND WORK QUANTITIES. THE CONTRACTOR SHALL PERFORM ALL WORK IN ACCORDANCE WITH FIELD CONDITIONS OR AS DIRECTED BY THE ENGINEER.

2. RECONSTRUCTION OF THE ELASTOMERIC CONCRETE HEADER SHALL BE PAID FOR UNDER "ELASTOMERIC CONCRETE HEADER." RECONSTRUCTION OF THE DECK ENDS SHALL BE PAID FOR UNDER "RECONSTRUCT CONCRETE DECK ENDS." SEE JOINT DETAILS SHEET.

REV.	DATE	REVISION DESCRIPTION	SHEET NO.

THE INFORMATION, INCLUDING ESTIMATED QUANTITIES OF WORK, SHOWN ON THESE SHEETS IS BASED ON LIMITED INVESTIGATIONS BY THE STATE AND IS IN NO WAY WARRANTED TO INDICATE THE CONDITIONS OF ACTUAL QUANTITIES OF WORK WHICH WILL BE REQUIRED.

Plotted Date: 1/12/2021

DESIGNER/DRAFTER: -

CHECKED BY: ZMK

SCALE AS NOTED

STATE OF CONNECTICUT
DEPARTMENT OF TRANSPORTATION

Filename: ...\0042-0325 Concrete Deck Plan.dgn

SIGNATURE/ BLOCK:

OFFICE OF ENGINEERING

APPROVED BY:

Andrew J Cardinali

PROJECT TITLE:

REHABILITATION OF BRIDGE NO. 05844A CARRYING I-84 OVER ROUTE 15

TOWN: **EAST HARTFORD**

DRAWING TITLE: **CONCRETE DECK PLAN**

PROJECT NO. **0042-0325**

DRAWING NO. **S-13**

SHEET NO. **04.13**

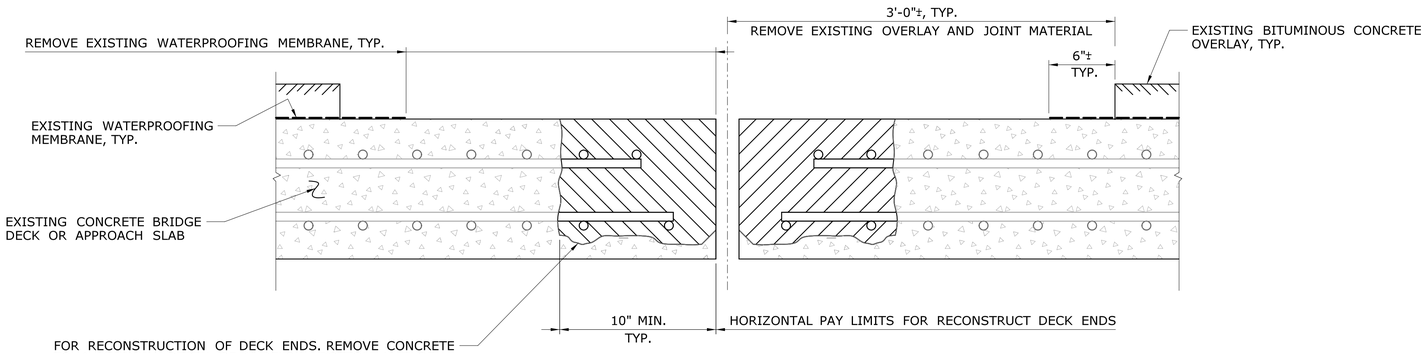

REMOVE OVERLAY, CONCRETE AT DECK END, AND WATERPROOFING MEMBRANE

SCALE: NTS

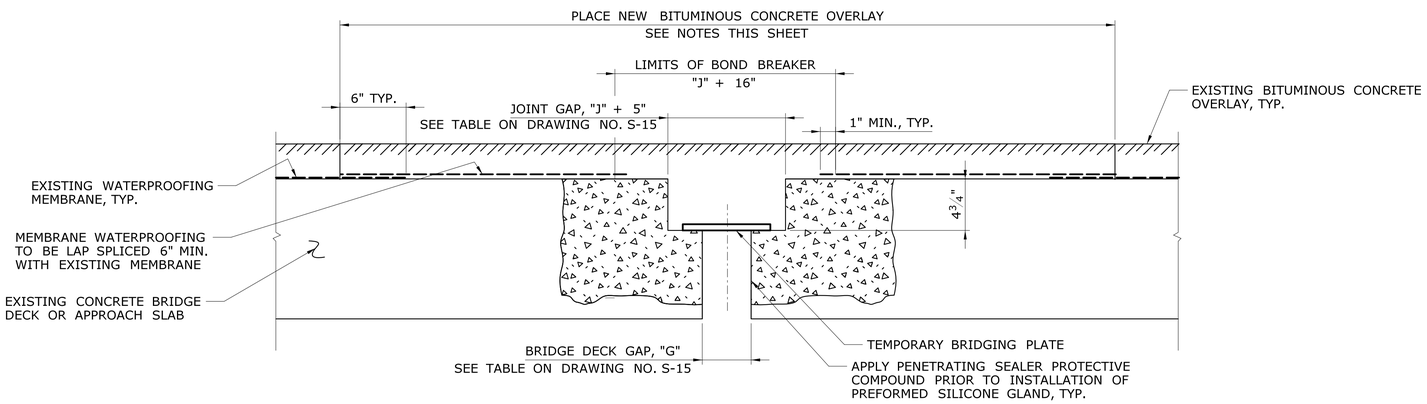

INSTALL/RESTORE OVERLAY OVER RECONSTRUCTED DECK END

SCALE: NTS

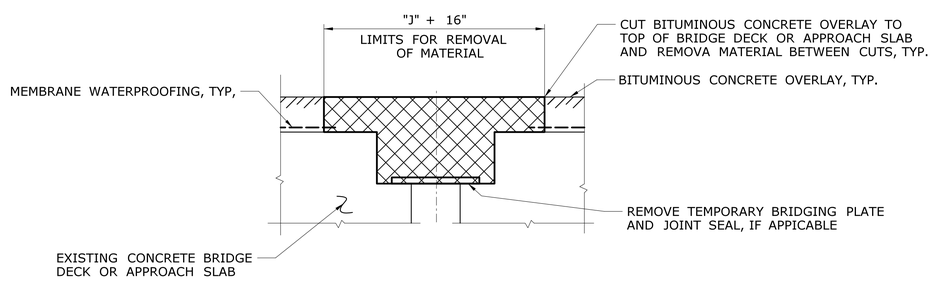

REMOVE OVERLAY FOR CONSTRUCTION OF HEADERS

SCALE: NTS

PROPOSED SEQUENCE FOR DECK END RECONSTRUCTION FOR INSTALLATION OF ELASTOMERIC CONCRETE HEADERS AND PREFORMED JOINT SEAL

BITUMINOUS CONCRETE PLACEMENT AT PREFORMED JOINT SEAL

1. THE REQUIREMENTS OF STANDARD SPECIFICATION FORM 818, SECTION 4.06 SHALL BE MET EXCEPT IN LIEU OF DENSITY TESTING, THE METHODS DESCRIBED BELOW SHALL BE FOLLOWED TO ASSURE PROPER COMPACTION.
2. TOP LIFT MUST BE UNIFORM THICKNESS; INTERMEDIATE LIFTS CAN BE PLACED AT 1 1/4" TO 2" COMPACTED.
3. REQUIREMENTS FOR PROPER COMPACTION:
   a. MINIMUM 265° F DELIVERY TEMPERATURE OF MATERIAL. PLACE AND SPREAD MATERIAL BEFORE IT COOLS TO 260° F. MATERIAL BELOW TEMPERATURE REQUIREMENT WILL BE REJECTED.
   b. COMPACT NON-SURFACE LIFTS WITH VIBRATORY PLATE COMPACTOR MEETING THE FOLLOWING REQUIREMENTS:
      i. DESIGNED TO COMPACT ASPHALT
      ii. EQUIPPED WITH A WATER TANK
      iii. CENTRIFUGAL FORCE 3200 LBS TO 6000 LBS
      iv. WEIGHS MINIMUM 160 LBS (WITHOUT WATER)
      v. MINIMUM 4400 VIBRATIONS PER MINUTE
   c. COMPACT TOP LIFT WITH 3 1/2 TO 4 1/2 TON DOUBLE DRUM ROLLER, DESIGNED TO COMPACT BITUMINOUS CONCRETE.
   d. PROVIDE NUMBER OF PASSES BASED ON LIFT THICKNESS AS FOLLOWS:

LIFT THICKNESS (INCHES)	NUMBER OF PASSES
1 1/4 TO 1 1/2	8
1 1/2 TO 2	10
2 TO 2 1/2	12

   e. ADDITIONAL COMPACTING EQUIPMENT MAY BE REQUIRED TO COMPLETE LIFT COMPACTION BEFORE MATERIAL COOLS TO 180° F.
   f. AT CORNERS OR OTHER AREAS INACCESSIBLE TO PLATE TAMPER, HAND TAMP 20 TIMES MINIMUM BEFORE MATERIAL COOLS TO 180° F.
4. ALTERNATE EQUIPMENT MAY BE REQUESTED AS A SUPPLEMENT TO CONTRACTOR'S QC PLAN. THE EQUIPMENT AND PROCEDURES MUST BE APPROVED BY THE ENGINEER PRIOR TO USE.
5. IF THESE METHODS ARE NOT PERFORMED TO THE SATISFACTION OF THE ENGINEER, DENSITY VERIFICATION MAY BE REQUIRED WHEREIN THE CONTRACTOR SHALL PROVIDE DENSITY TESTING WITH A QC NUCLEAR DENSITY GAUGE OR COLLECT CORE SAMPLES AS SPECIFIED IN SECTION 4.06.
6. HMA S0.375 SHALL BE USED FOR WEDGING AS REQUIRED DUE TO DIFFERENT EXISTING BITUMINIOUS CONCRETE THICKNESSES, AND SHALL BE INCLUDED FOR PAYMENT UNDER THE ITEM "HMA S0.375." WEDGE THICKNESS PLACEMENT SHALL BE 1/2" TO 2 1/2".
7. TEMPORARY BRIDGING PLATE WILL NOT BE MEASURED FOR PAYMENT, BUT SHALL BE INCLUDED IN THE GENERAL COST OF THE WORK.

JOINT WORK FOR BRIDGES

1. ALL WORK TO REMOVE BITUMINOUS CONCRETE OVERLAY, MEMBRANE WATERPROOFING, EXISTING JOINT COMPONENTS AND SEALING ELEMENTS, SHALL BE INCLUDED IN THE COST OF "REMOVAL OF EXISTING WEARING SURFACE".
2. WHERE EXISTING BRIDGE DECK JOINTS ARE CONCEALED BENEATH BITUMINOUS CONCRETE OVERLAY THE CONTRACTOR SHALL VERIFY THE BRIDGE DECK JOINT LOCATION AND SUBMIT THE LIMITS OF SAW-CUTTING FOR THE ENGINEERS APPROVAL.
3. THE FURNISHING AND PLACING OF HMA S0.375 SHALL CONFORM TO "BITUMINOUS CONCRETE PLACEMENT AT PREFORMED JOINT SEAL" AND SHALL BE INCLUDED FOR PAYMENT UNDER THE ITEM "HMA S0.375."
4. MEMBRANE WATERPROOFING SHALL BE "MEMBRANE WATERPROOFING (COLD LIQUID ELASTOMERIC)" AND SHALL BE PLACED PRIOR TO PLACEMENT OF PAVEMENT OVERLAY.
5. EXPLORATION OF PAVEMENT THICKNESS AND JOINT LOCATION TO BE INCLUDED IN THE GENERAL COST OF ITEM "REMOVAL OF EXISTING WEARING SURFACE."
6. CONTRACTOR SHALL NOTIFY THE DEPARTMENT IF THE EXISTING PAVEMENT IS DETERMINED TO BE LESS THAN 2" OR GREATER THAN 6" WITHIN THE BRIDGE LIMIT.

REV.	DATE	REVISION DESCRIPTION	SHEET NO.

THE INFORMATION, INCLUDING ESTIMATED QUANTITIES OF WORK, SHOWN ON THESE SHEETS IS BASED ON LIMITED INVESTIGATIONS BY THE STATE AND IS IN NO WAY WARRANTED TO INDICATE THE CONDITIONS OF ACTUAL QUANTITIES OF WORK WHICH WILL BE REQUIRED.

Plotted Date: 1/13/2021

DESIGNER/DRAFTER: ECO
CHECKED BY: ZMK
SCALE AS NOTED

STATE OF CONNECTICUT
DEPARTMENT OF TRANSPORTATION

Filename: ...\0042-0325 Deck End Reconstruction Suggested Construction Sequence_A1.dgn

SIGNATURE/BLOCK: OFFICE OF ENGINEERING
APPROVED BY:

PROJECT TITLE: REHABILITATION OF BRIDGE NO. 05844A CARRYING I-84 OVER ROUTE 15

TOWN: EAST HARTFORD

DRAWING TITLE: DECK END RECONSTRUCTION SUGGESTED SEQUENCE

PROJECT NO. 0042-0325
DRAWING NO. S-14
SHEET NO. 04.14

JOINT SELECTION TABLE - WABO SPS-400

JOINT LOCATION	THERMAL MOVEMENT RANGE (IN.)	NOMINAL MOVEMENT CAPACITY	SKEW	MFR. RECOMMENDED MIN. DECK JOINT GAP, "J" MIN. AT 110° F (IN.)	WIDTH OF SHELF (IN.)	MIN. BRIDGE DECK GAP AT 110° F (IN.), "G"	DECK JOINT GAP, "J" AT INSTALLATION (IN.)					DEPTH OF SHELF (IN.)
							40° F	50° F	60° F	70° F	80° F	
ABUTMENT 1	1	4	0	1	1/2	2 1/8	3 3/4	3 3/4	3 2/3	3 1/2	3 1/2	3 3/4
PIER 1	1	4	0	1	1/2	1	2 1/2	2 1/2	2 3/8	2 1/3	2 1/4	3 3/4
PIER 2	1	4	0	1	1/2	1	2 1/2	2 1/2	2 3/8	2 1/3	2 1/4	3 3/4
PIER 3	1	4	0	1	1/2	1	2 1/2	2 1/2	2 3/8	2 1/3	2 1/4	3 3/4
PIER 4	1 1/8	4	0	1	1/2	7/8	2 1/2	2 1/2	2 3/8	2 1/3	2 1/4	3 3/4
PIER 5	-	-	-	-	-	-	-	-	-	-	-	-
PIER 6	1 1/8	4	0	1	1/2	1 3/8	3	3	2 7/8	2 3/4	2 3/4	3 3/4
PIER 7	-	-	-	-	-	-	-	-	-	-	-	-
PIER 8	1 1/8	4	0	1	1/2	1 3/8	3	3	2 7/8	2 3/4	2 3/4	3 3/4
PIER 9	1	4	54	1	1/2	1 5/8	3 1/8	3 1/8	3	2 7/8	2 7/8	3 3/4
PIER 10	-	-	-	-	-	-	-	-	-	-	-	-
PIER 11	1	4	54	1	1/2	1 5/8	3 1/8	3 1/8	3	2 7/8	2 7/8	3 3/4
ABUTMENT 2	1	4	57	1	1/2	1 7/8	3 1/8	3 1/8	3	3	3	3 3/4

JOINT MATERIAL TABLE

JOINT LOCATION	JOINT MATERIAL LENGTH
ABUTMENT 1	86.62'
PIER 1	89.97'
PIER 2	89.20'
PIER 3	110.68'
PIER 4	122.36'
PIER 5	-
PIER 6	71.75'
PIER 7	-
PIER 8	71.75'
PIER 9	112.06'
PIER 10	-
PIER 11	112.34'
ABUTMENT 2	119.36'

JOINT AND HEADER NOTES

1. THE ELASTOMERIC CONCRETE HEADER AND PREFORMED JOINT SEAL SHALL BE INSTALLED AFTER THE PAVEMENT HAS BEEN PLACED. NO NEW PAVEMENT SHALL BE PLACED EXCEPT AT THE REPLACED JOINTS.
2. ELASTOMERIC CONCRETE HEADERS WILL BE PAID FOR UNDER THE ITEM "ELASTOMERIC CONCRETE HEADER". THE PREFORMED SILICONE JOINT SEAL GLAND WILL BE PAID FOR UNDER "PREFORMED JOINT SEAL."
3. DRILLING AND GROUTING GFRP DOWELS AND FURNISHING AND INSTALLING TRANSVERSE GFRP BARS ARE INCLUDED IN THE UNIT PRICE FOR "ELASTOMERIC CONCRETE HEADER".
4. DIMENSIONS "J", "G" AND SHELF WIDTH ARE MEASURED PERPENDICULAR TO THE DECK END. SEE JOINT SELECTION TABLE FOR VALUES.
5. THE PREFORMED JOINT SEAL SHALL BE INSTALLED IN ACCORDANCE WITH THE PLANS, WITH THE MANUFACTURER'S WRITTEN INSTRUCTIONS AND AS DIRECTED BY THE ENGINEER.
6. SURFACE PREPARATION IS CRITICAL FOR ADHESION OF ELASTOMERIC CONCRETE TO THE BRIDGE DECK AND FOR ADHESION OF THE PREFORMED GLAND WITHIN THE JOINT OPENING.THE CONTRACTOR SHALL NOT PROCEED WITH THE INSTALLATION OF THE HEADERS OR PREFORMED GLANDS WITHOUT AUTHORIZATION FROM THE ENGINEER.
7. THE CONTRACTOR MUST INSTALL THE PREFORMED JOINT SEAL GLANDS SHOWN IN THE JOINT SELECTION TABLE AND LISTED IN THE SPECIAL PROVISION "PREFORMED JOINT SEAL".
8. IF STAGED CONSTRUCTION IS REQUIRED, ELASTOMERIC CONCRETE HEADER REINFORCEMENT SHALL BE DISCONTINUOUS AT CONSTRUCTION JOINTS.
9. MEMBRANE WATERPROOFING SHALL BE PAID FOR UNDER THE ITEM "MEMBRANE WATERPROOFING (COLD LIQUID ELASTOMERIC). PROPOSED MEMBRANE SHALL HAVE A 6" MIN. LAP SPLICE WITH THE EXISTING MEMBRANE.
10. HMA S0.375 SHALL BE INSTALLED WITH UNIFORM LIFT THICKNESSES RANGING FROM 1 1/4" MIN. TO 2" MAX., WITH THE PREFERRED THICKNESS BEING 1 1/2". THE FINAL SURFACE LIFT SHALL BE OF UNIFORM THICKNESS. IF WEDGING OF THE BITUMINOUS IS NECCESSARY TO ACCOMMODATE DIFFERING EXISTING BITUMINOUS CONCRETE THICKNESSES ACROSS THE BRIDGE, THEN HMA S0.375 SHALL ALSO BE USED. THE MINIMUM WEDGE THICKNESS PLACEMENT SHALL BE 1/2" AND THE MAXIMUM WEDGE THICKNESS SHALL BE 2 1/2". SEE DRAWING NO. S-14 FOR ADDITIONAL NOTES.

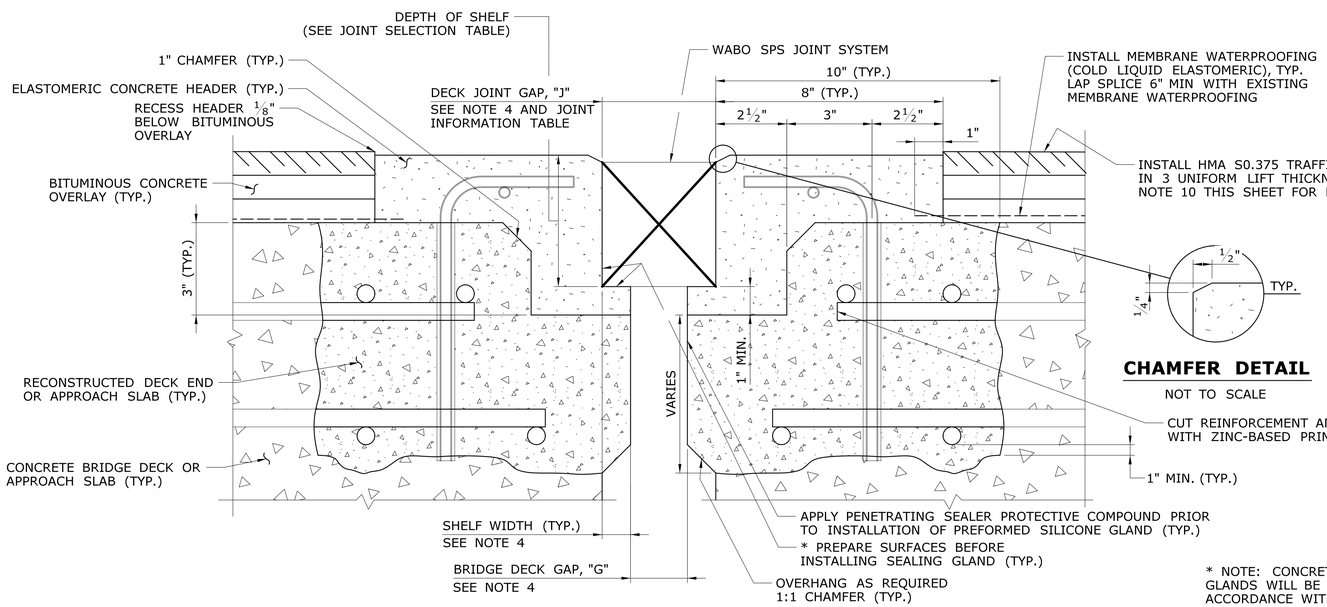

CHAMFER DETAIL

NOT TO SCALE

SECTION - RECONSTRUCTED DECK END (1A / -)

NOT TO SCALE

SECTION - ELASTOMERIC CONCRETE HEADERS AND PREFORMED JOINT SEAL (1 / -)

* NOTE: CONCRETE SURFACES TO WHICH SEALING GLANDS WILL BE BONDED SHALL BE PREPARED IN ACCORDANCE WITH ICRI CONCRETE SURFACE PROFILE STANDARDS. THE MINIMUM ACCEPTABLE SURFACE PROFILE IS CSP2 (GRINDING), BUT CSP3 (LIGHT ABRASIVE BLAST) IS PREFERRED. THE GLAND SHALL NOT BE INSTALLED UNTIL THE SURFACE IS CLEAN, DRY AND ACCEPTED BY THE ENGINEER.

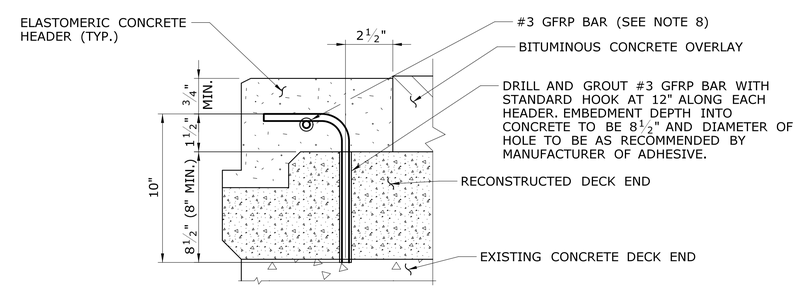

SECTION - HOOKED BAR EMBEDMENT AT HEADER

NOT TO SCALE

NOTE: DECK END RECONSTRUCTION FOR WHEN BRIDGE DECK GAP IS TOO WIDE IS SHOWN. OTHER HEADER AND SHELF CONFIGURATIONS ARE SIMILAR.

REV.	DATE	REVISION DESCRIPTION	SHEET NO.

THE INFORMATION, INCLUDING ESTIMATED QUANTITIES OF WORK, SHOWN ON THESE SHEETS IS BASED ON LIMITED INVESTIGATIONS BY THE STATE AND IS IN NO WAY WARRANTED TO INDICATE THE CONDITIONS OF ACTUAL QUANTITIES OF WORK WHICH WILL BE REQUIRED.

Plotted Date: 1/13/2021

DESIGNER/DRAFTER: ECO
CHECKED BY: ZMK
SCALE AS NOTED

STATE OF CONNECTICUT
DEPARTMENT OF TRANSPORTATION

Filename: ..\0042-0325 Joint Details_A1.dgn

SIGNATURE/BLOCK: OFFICE OF ENGINEERING
APPROVED BY: Andrew J. Cardinali

PROJECT TITLE: REHABILITATION OF BRIDGE NO. 05844A CARRYING I-84 OVER ROUTE 15

TOWN: EAST HARTFORD

DRAWING TITLE: TYPICAL JOINT DETAILS AND NOTES

PROJECT NO. 0042-0325
DRAWING NO. S-15
SHEET NO. 04.15

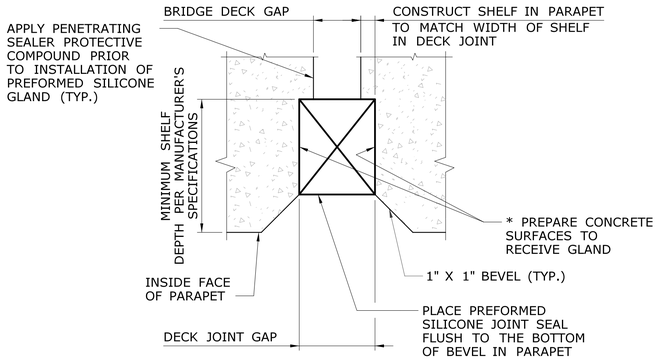

PREFORMED JOINT SEAL SECTION IN PARAPET (3 / -)

SCALE: 6" = 1'-0"

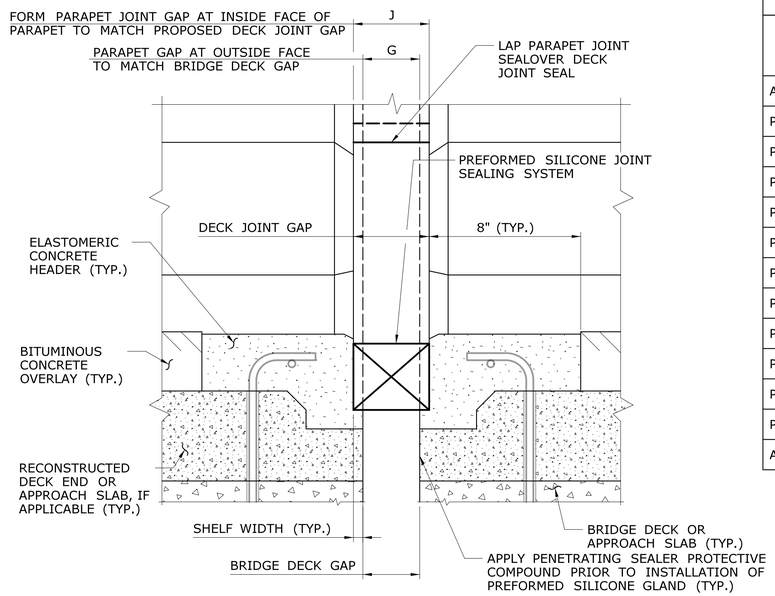

PREFORMED SILICONE JOINT SEALING SYSTEM SECTION AT CURB (4 / -)

SCALE: 3" = 1'-0"

PARAPET JOINT SELECTION TABLE - WABO SPS-400

JOINT LOCATION	THERMAL MOVEMENT RANGE (IN.)	NOMINAL MOVEMENT CAPACITY	SKEW	MFR. RECOMMENDED MIN. PARAPET GAP, "J" MIN. AT 110° F (IN.)	MIN. PARAPET GAP AT 110° F (IN.), "G"	PARAPET JOINT GAP, "J" AT INSTALLATION (IN.)				
						40° F	50° F	60° F	70° F	80° F
ABUTMENT 1	1	4	0	1	2 1/8	3 3/4	3 3/4	3 2/3	3 1/2	3 1/2
PIER 1	1	4	0	1	1	2 1/2	2 1/2	2 3/8	2 1/3	2 1/4
PIER 2	1	4	0	1	1	2 1/2	2 1/2	2 3/8	2 1/3	2 1/4
PIER 3	1	4	0	1	1	2 1/2	2 1/2	2 3/8	2 1/3	2 1/4
PIER 4	1 1/8	4	0	1	7/8	2 1/2	2 1/2	2 3/8	2 1/3	2 1/4
PIER 5	-	-	-	-	-	-	-	-	-	-
PIER 6	1 1/8	4	0	1	1 3/8	3	3	2 7/8	2 3/4	2 3/4
PIER 7	-	-	-	-	-	-	-	-	-	-
PIER 8	1 1/8	4	0	1	1 3/8	3	3	2 7/8	2 3/4	2 3/4
PIER 9	1	4	54	1	1 5/8	3 1/8	3 1/8	3	2 7/8	2 7/8
PIER 10	-	-	-	-	-	-	-	-	-	-
PIER 11	1	4	54	1	1 5/8	3 1/8	3 1/8	3	2 7/8	2 7/8
ABUTMENT 2	1	4	57	1	1 7/8	3 1/8	3 1/8	3	3	3

NOTE: THE CONTRACTOR SHALL MEASURE THE PARAPET JOINT GAP IN THE EXISTING PARAPET AND THE TEMPERATURE AT WHICH THE MEASUREMENT IS TAKEN AND SUBMIT TO THE ENGINEER.

* NOTE: CONCRETE SURFACES TO WHICH SEALING GLANDS WILL BE BONDED SHALL BE PREPARED IN ACCORDANCE WITH ICRI CONCRETE SURFACE PROFILE STANDARDS. THE MINIMUM ACCEPTABLE SURFACE PROFILE IS CSP2 (GRINDING), BUT CSP3 (LIGHT ABRASIVE BLAST) IS PREFERRED. THE GLAND SHALL NOT BE INSTALLED UNTIL THE SURFACE IS CLEAN, DRY AND ACCEPTED BY THE ENGINEER.

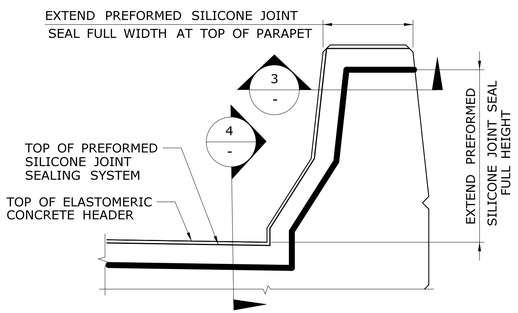

DECK AND PARAPET GLAND PLACEMENT (2A / -)

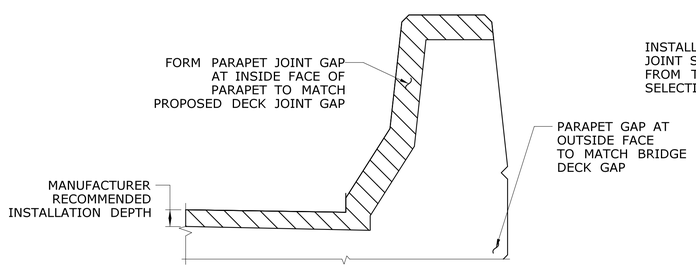

SHELF CONSTRUCTION IN DECK AND PARAPET JOINT (2B / -)

SECTION THROUGH PARAPET (2 / -)

SCALE: 1" = 1'-0"

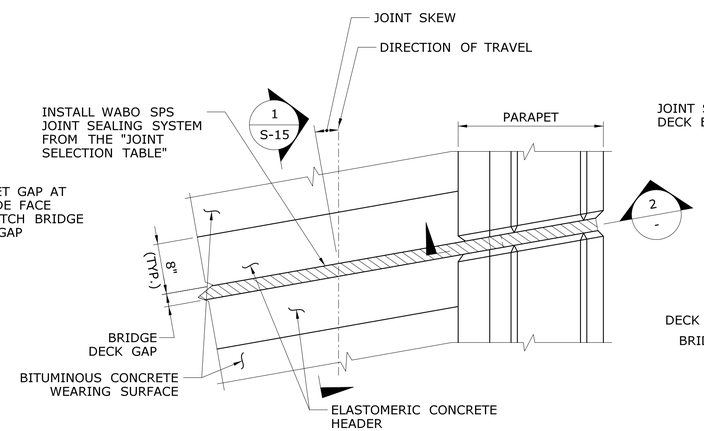

JOINT SKEW ≤ 20°

SCALE: 1" = 1'-0"

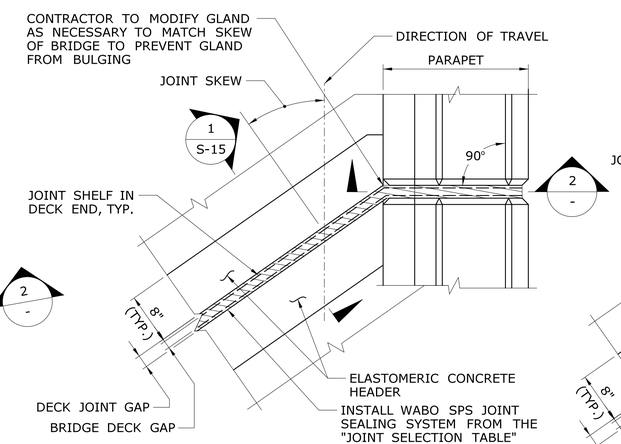

JOINT SKEW > 20°

SCALE: 1" = 1'-0"

PLAN - EXPANSION JOINT AT BRIDGES WITHOUT SIDEWALKS

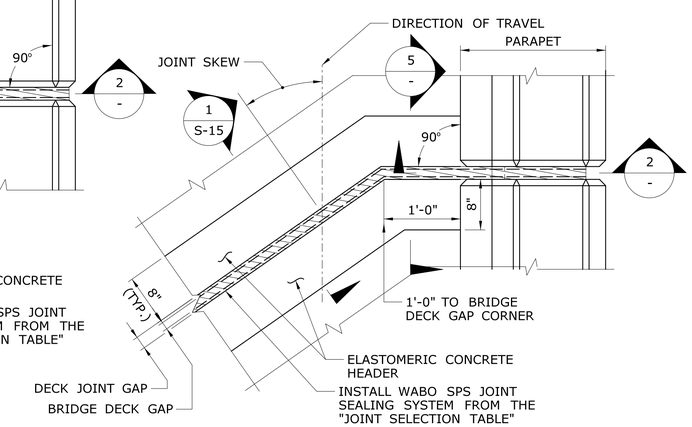

JOINT SKEW > 20°

SCALE: 1" = 1'-0"

NOTE: THE INTENT OF THESE DETAILS IS TO PROVIDE A GENERAL SCHEMATIC OF HOW THE PREFORMED JOINT SEAL INTERSECTS THE PARAPET. THE CONTRACTOR SHALL VERIFY THE EXISTING FIELD CONDITIONS AND SELECT THE JOINT CONDITION WHICH MOST CLOSELY MATCHES THE EXISTING CONDITION

REV.	DATE	REVISION DESCRIPTION	SHEET NO.

THE INFORMATION, INCLUDING ESTIMATED QUANTITIES OF WORK, SHOWN ON THESE SHEETS IS BASED ON LIMITED INVESTIGATIONS BY THE STATE AND IS IN NO WAY WARRANTED TO INDICATE THE CONDITIONS OF ACTUAL QUANTITIES OF WORK WHICH WILL BE REQUIRED.

Plotted Date: 1/12/2021

DESIGNER/DRAFTER: ECO
CHECKED BY: ZMK
SCALE AS NOTED

STATE OF CONNECTICUT
DEPARTMENT OF TRANSPORTATION

Filename: ...\0042-0325 Parapet Joint Details_A1.dgn

SIGNATURE/BLOCK: OFFICE OF ENGINEERING
APPROVED BY:

PROJECT TITLE: REHABILITATION OF BRIDGE NO. 05844A CARRYING I-84 OVER ROUTE 15

TOWN: EAST HARTFORD

DRAWING TITLE: PARAPET JOINT DETAILS

PROJECT NO. 0042-0325
DRAWING NO. S-16
SHEET NO. 04.16

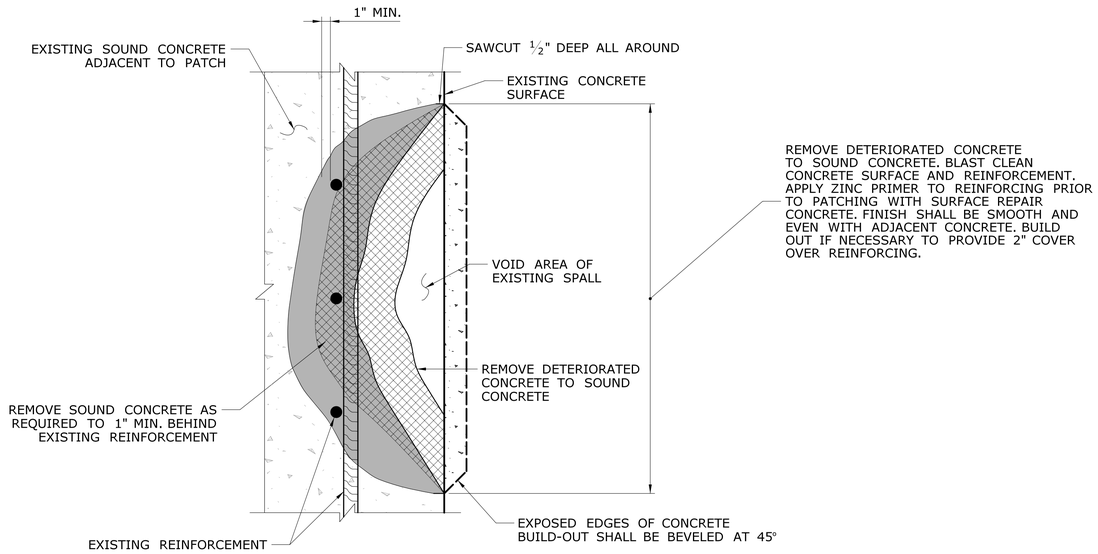

SUBSTRUCTURE PATCH
REINFORCEMENT PARTIALLY EXPOSED

SCALE: N.T.S.

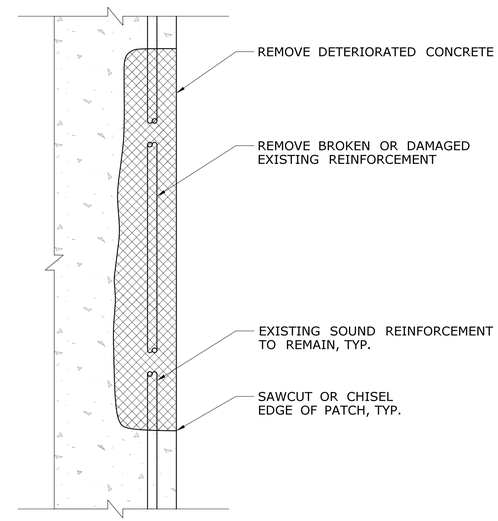

DAMAGED REINFORCEMENT
TYPICAL SECTION

SCALE: N.T.S.

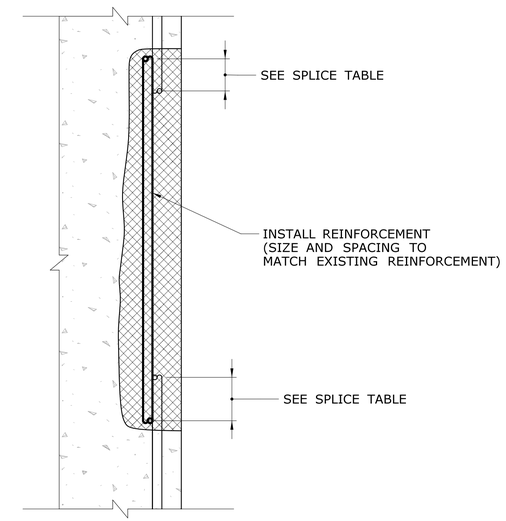

TYPICAL SPLICE DETAIL

SCALE: N.T.S.

REINFORCEMENT REPAIR DETAIL

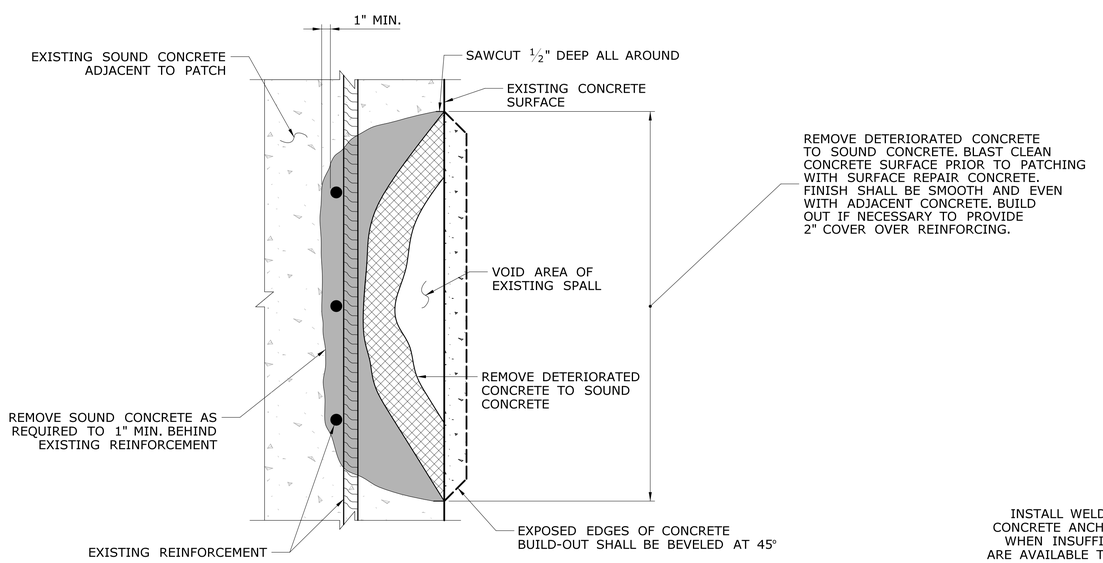

SUBSTRUCTURE PATCH
NO REINFORCEMENT EXPOSED

SCALE: N.T.S.

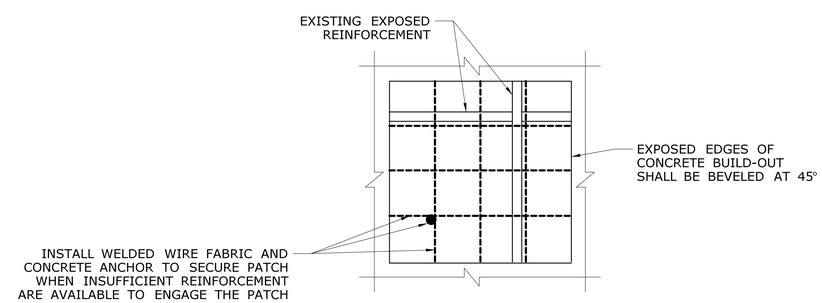

WELDED WIRE FABRIC DETAIL

SCALE: N.T.S.

TABLE OF SPLICE LENGTHS

BAR SIZE	MIN. SPLICE LENGTH
#4	1'-8"
#5	1'-11"
#6	2'-5"
#7	2'-10"
#8	3'-2"
#9	3'-7"
#10	4'-3"
#11	5'-2"

REV.	DATE	REVISION DESCRIPTION	SHEET NO.

THE INFORMATION, INCLUDING ESTIMATED QUANTITIES OF WORK, SHOWN ON THESE SHEETS IS BASED ON LIMITED INVESTIGATIONS BY THE STATE AND IS IN NO WAY WARRANTED TO INDICATE THE CONDITIONS OF ACTUAL QUANTITIES OF WORK WHICH WILL BE REQUIRED.

Plotted Date: 1/12/2021

DESIGNER/DRAFTER: ECO
CHECKED BY: ZMK
SCALE AS NOTED

STATE OF CONNECTICUT
DEPARTMENT OF TRANSPORTATION

Filename: ...\0042-0325 Concrete Repair Details - 1.dgn

SIGNATURE/BLOCK: **OFFICE OF ENGINEERING**
APPROVED BY:

PROJECT TITLE: **REHABILITATION OF BRIDGE NO. 05844A CARRYING I-84 OVER ROUTE 15**

TOWN: **EAST HARTFORD**

DRAWING TITLE: **CONCRETE REPAIR DETAILS - 1**

PROJECT NO. **0042-0325**
DRAWING NO. **S-17**
SHEET NO. **04.17**

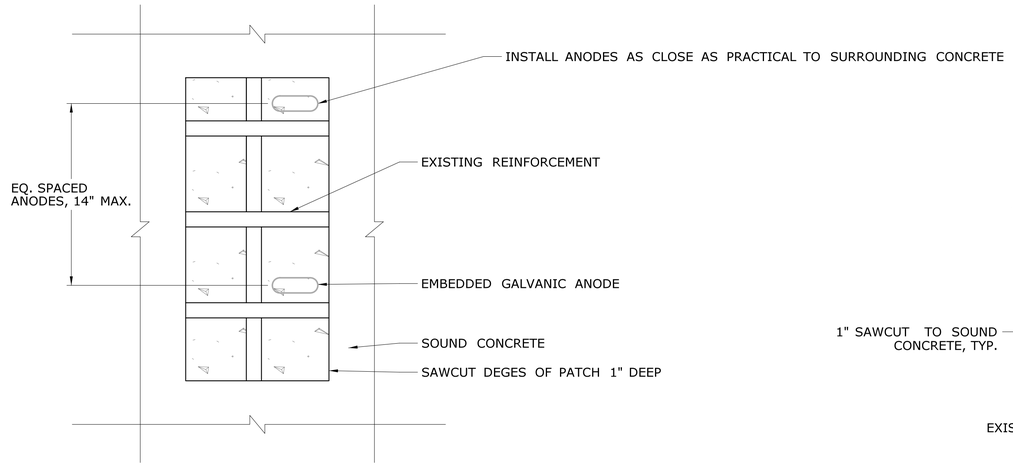

NARROW PATCH

SCALE: N.T.S.

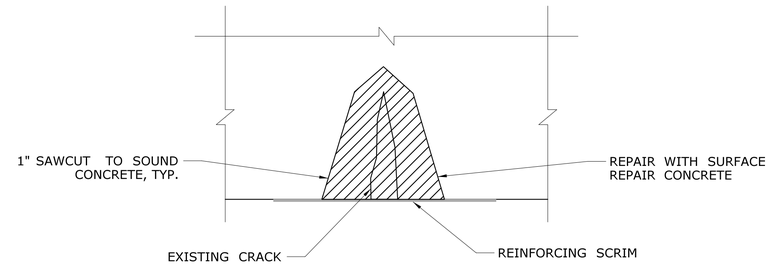

CONCRETE CRACK REPAIR

SCALE: N.T.S.

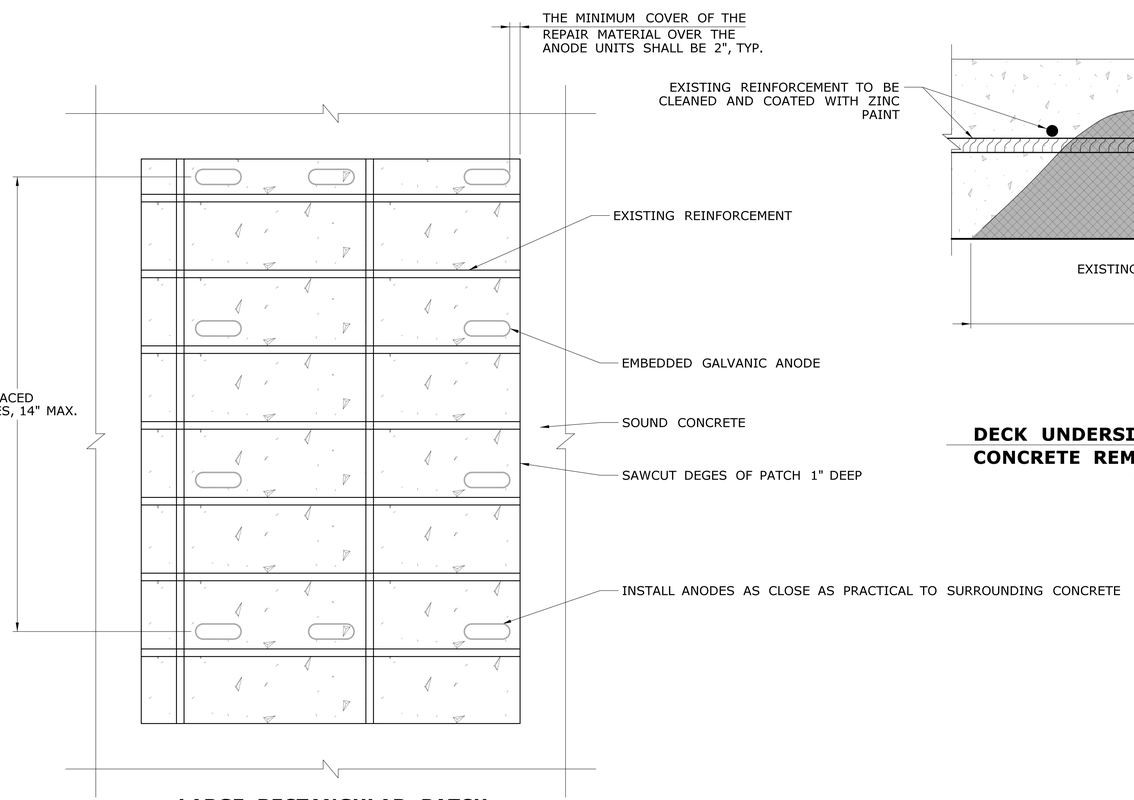

LARGE RECTANGULAR PATCH

SCALE: N.T.S.

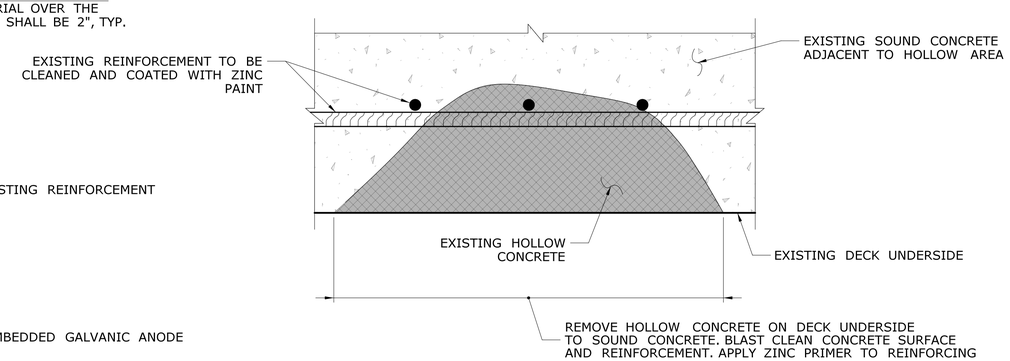

DECK UNDERSIDE REHABILITATION HOLLOW CONCRETE REMOVAL SPAN 10 AND 11

SCALE: N.T.S.

CONCRETE REPAIR NOTES

THE ELEVATION VIEWS OF THE SUBSTRUCTURE NOTE THE LOCATIONS OF UNSOUND OR DETERIORATED CONCRETE TO BE REPAIRED. THE METHOD USED TO DELINEATE AREAS OF CONCRETE TO BE REPAIRED SHALL NOT PERMANENTLY MARK THE CONCRETE, LEAVE ANY RESIUDE AFTER REMOVAL, OR REQUIRE HARSH CHEMICALS TO REMOVE.

THE CONTRACTOR SHALL REMOVE THE DETERIORATED CONCRETE IN ACCORDANCE WITH THE GUIDELINES SET IN THESE NOTES AND IN THE SPECIAL PROVISIONS.

EXPOSED REINFORCEMENT ON THE UNDERSIDE OF THE BRIDGE DECK SHALL BE TOUCHED UP WITH ZINC PAINT AND PAID FOR UNDER THE ITEM, "CLEAN AND COAT EXPOSED REINFORCING STEEL." HOLLOW CONCRETE ON THE DECK UNDERSIDE WITHIN SPANS 10 AND 11 OVER ROUTE 15 SHALL BE REMOVED TO SOUND CONCRETE AND THE EXISTING REINFORCEMENT CLEANED AND COATED WITH ZINC PAINT. PATCHING ON THE DECK UNDERSIDE IS NOT REQUIRED.

SURFACE REPAIR CONCRETE SHALL BE USED FOR ALL SUBSTRUCTURE REPAIRS.

IF THERE IS NOT SUFFICIENT EXISTING REINFORCEMENT AVAILABLE, THEN GALVANIZED MECHANICAL ANCHORS @ 6" O.C. (OR AS DIRECTED BY THE ENGINEER) SHALL BE INSTALLED INTO SOUND CONCRETE TO ENGAGE THE WELDED WIRE FABRIC.

BEFORE APPLYING THE PATCHING MATERIAL, THE REINFORCING BARS SHALL BE BLAST CLEANED AND EMBEDDED GALVANIC ANODES INSTALLED.

AT ABUTMENTS, SURFACE REPAIR CONCRETE SHALL STOP ONE INCH ABOVE THE GRADE. NO REPAIR SHALL BE PERFORMED BELOW THIS LIMIT.

REINFORCING BAR REPAIRS: REINFORCING WHICH NEEDS TO BE REPLACED, SHALL BE REMOVED TO A POINT WHERE IT IS SOUND. THE PATCH SHALL EXTEND A SUFFICIENT DISTANCE BEYOND THIS POINT TO DEVELOP A SPLICE LENGTH SPECIFIC IN THE TABLE ON THIS SHEET. WELDING TO EXISTING REINFORCING BARS SHALL NOT BE ALLOWED.

RESTRICTIONS: THE REMOVAL OF DETERIORATED CONCRETE SHALL PROCEED AS NOTED IN THE PLANS. IF REMOVAL EXTENDS MORE THAN $1\frac{1}{2}$" BEHIND THE MAIN REINFORCING BARS, THE REMOVAL WORK SHALL BE STOPPED AND THE ENGINEER NOTIFIED IMMEDIATELY.

MAXIMUM HAMMER SIZE USED TO REMOVE DETERIORATED CONCRETE SHALL BE 15 POUNDS.

AT PIER COLUMNS AND CAPS, IF REMOVAL OF DETERIORATED CONCRETE EXTENDS INSIDE THE MAIN REINFORCING, REMOVAL SHALL BE LIMITED TO ONE FACE OF THE MEMBER AT A TIME AND A MAXIMUM AREA OF 4 SQUARE FEET OF REMOVAL MAY BE PERMITTED ON MORE THAN ONE FACE OF THE COLUMN SIMULTANEOUSLY IF THE AREAS OF REMOVAL ARE NOT ADJACENT TO OR DIRECTLY OPPOSITE ONE ANOTHER.

IF A REBAR SPLICE IS ENCOUNTERED DURING REMOVAL OF CONCRETE IN A PIER COLUMN OR CAP, WORK AT THAT LOCATION SHALL BE STOPPED AND THE ENGINEER SHALL BE NOTIFIED. WORK AT THAT LOCATION SHALL NOT PROCEED UNTIL DIRECTION IS GIVEN BY THE ENGINEER.

BEFORE EXPOSING THE MAIN REINFORCING BARS OF MORE THAN ONE PIER COLUMN AT THE SAME TIME, THE ENGINEER SHALL BE CONSULTED.

COLUMN REPAIR RESTRICTIONS:

COLUMNS SHALL BE PATCHED STARTING AT THE BOTTOM OF THE COLUMNS AND WORKING YOUR WAY TOWARDS THE TOP OF THE COLUMN.

COLUMNS SHALL BE PATCHED ONE FACE AT A TIME. NO MORE THAN 10% OF THE CROSS SECTIONAL AREA OF A COLUMN CAN BE REMOVED AS PART OF ONE PATCH NOT TO EXCEED 5 FEET IN HEIGHT. IF DEPTH OF REMOVAL IS EXCESSIVE, THAT FACE OF THE COLUMN MAY NEED TO BE PATCHED IN SECTIONS.

A PATCH SHALL REACH ITS DESIRED STRENGTH (MINIMUM COMPRESSIVE STRENGTH AT 28 DAYS) BEFORE REMOVAL OPERATIONS FOR THE NEXT PATCH SHALL BEGIN. THERE WILL BE NO ADDITIONAL PAYMENT IF A SPECIAL SEQUENCE IS REQUIRED FOR PERFORMING CONCRETE REPAIR.

PIER CAP RESTRICTIONS:

AT THE PIER CAP, NO MORE THAN ONE THIRD OF THE UNDERSIDE OF THE CAP SHALL BE REMOVED AT ONE TIME. IF THE ENTIRE ENDERSIDE OF THE CAP IS TO BE PATCHED, BEGIN AT THE COLUMN AND PATCH ONE THIRD OF THE CLEAR SPAN OF THE CAP. AFTER THE PATCH HAS GAINED SUFFICIENT STRENGTH (MINIMUM COMPRESSIVE STRENGTH AT 28 DAYS), BEGIN AT THE OPPOSITE END OF THE CAP AND PATCH ONE THIRD OF THE SPAN. THE MIDDLE THIRD SHALL BE PATCHED LAST.

PAY ITEM NOTES:

ANODES SHALL BE PAID FOR UNDER THE ITEM "EMBEDDED GALVANIC ANODES."

SAWCUTTING SHALL BE INCLUDED IN THE CONTRACT BID PRICE OF THE APPLICABLE REPAIR PAY ITEM.

REINFORCING BARS SHALL BE PAID FOR AT THE CONTRACT UNIT PRICE FOR "VARIABLE QUANTITY DEFORMED STEEL BARS."

GALVANIZED ANCHORS SHALL BE PAID FOR UNDER THE ITEM "VARIABLE QUANTITY SURFACE REPAIR CONCRETE."

ALL CONCRETE REPAIRS, INCLUDING BUT NOT LIMITED TO CRACK REPAIR, SHALL BE PAID FOR UNDER "VARIABLE QUANTITY SURFACE REPAIR CONCRETE."

REV.	DATE	REVISION DESCRIPTION	SHEET NO.

THE INFORMATION, INCLUDING ESTIMATED QUANTITIES OF WORK, SHOWN ON THESE SHEETS IS BASED ON LIMITED INVESTIGATIONS BY THE STATE AND IS IN NO WAY WARRANTED TO INDICATE THE CONDITIONS OF ACTUAL QUANTITIES OF WORK WHICH WILL BE REQUIRED.

Plotted Date: 1/12/2021

DESIGNER/DRAFTER: ECO
CHECKED BY: ZMK
SCALE AS NOTED

STATE OF CONNECTICUT
DEPARTMENT OF TRANSPORTATION

Filename: ...\0042-0325 Concrete Repair Details - 2.dgn

SIGNATURE/BLOCK:
OFFICE OF ENGINEERING
APPROVED BY:

PROJECT TITLE:
REHABILITATION OF BRIDGE NO. 05844A CARRYING I-84 OVER ROUTE 15

TOWN: EAST HARTFORD

DRAWING TITLE:
CONCRETE REPAIR DETAILS - 2

PROJECT NO. 0042-0325
DRAWING NO. S-18
SHEET NO. 04.18

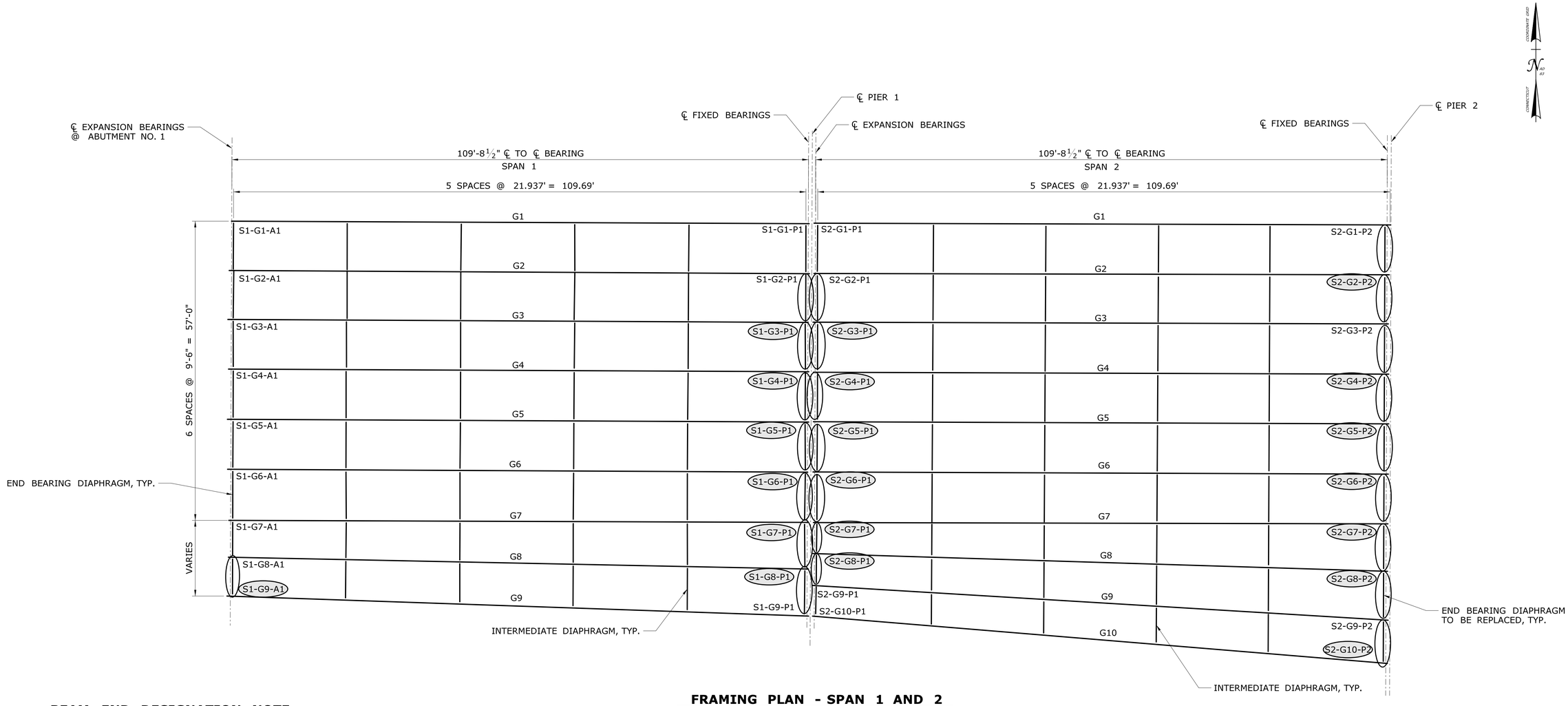

FRAMING PLAN - SPAN 1 AND 2

SCALE: 1" = 10'

BEAM END DESIGNATION NOTE

S(X)-G(X)-A(X)
S(X)-G(X)-P(X)

S(X) = SPAN NO.
G(X) = GIRDER NO.
A(X) = ABUTMENT NO.
P(X) = PIER NO.

DENOTES LOCATION OF BEAM END DETERIORATION

DENOTES LOCATION OF DIAPHRAGM REPLACEMENT

REV.	DATE	REVISION DESCRIPTION	SHEET NO.

THE INFORMATION, INCLUDING ESTIMATED QUANTITIES OF WORK, SHOWN ON THESE SHEETS IS BASED ON LIMITED INVESTIGATIONS BY THE STATE AND IS IN NO WAY WARRANTED TO INDICATE THE CONDITIONS OF ACTUAL QUANTITIES OF WORK WHICH WILL BE REQUIRED.

Plotted Date: 1/12/2021

DESIGNER/DRAFTER: ECO
CHECKED BY: ZMK
SCALE AS NOTED

STATE OF CONNECTICUT
DEPARTMENT OF TRANSPORTATION

Filename: ...\0042-0325 Framing Plan - Span 1 and 2.dgn

SIGNATURE/BLOCK:
OFFICE OF ENGINEERING
APPROVED BY:

PROJECT TITLE:
REHABILITATION OF BRIDGE NO. 05844A CARRYING I-84 OVER ROUTE 15

TOWN: **EAST HARTFORD**

DRAWING TITLE:
FRAMING PLAN SPAN 1 AND 2

PROJECT NO. **0042-0325**
DRAWING NO. **S-19**
SHEET NO. **04.19**

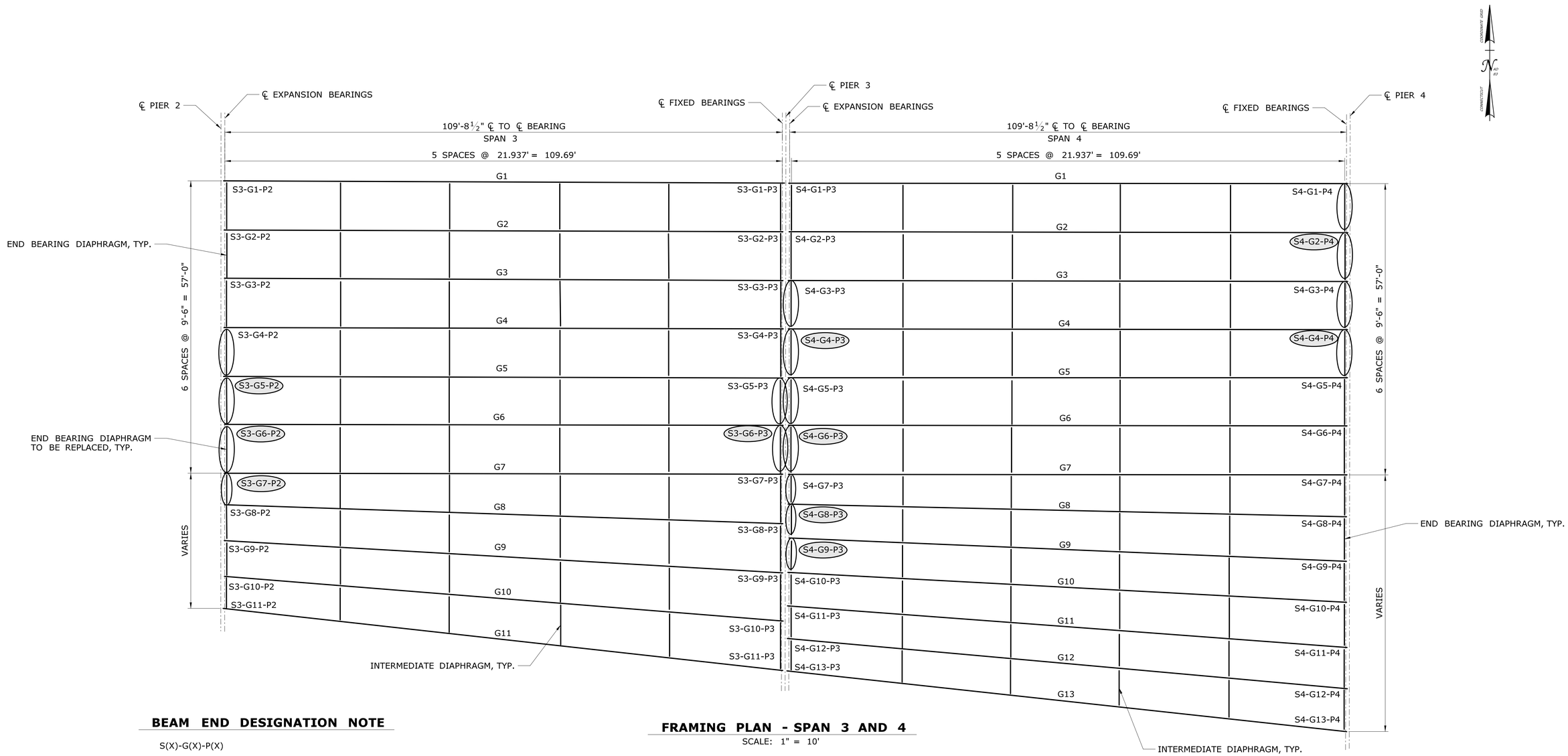

FRAMING PLAN - SPAN 3 AND 4

SCALE: 1" = 10'

BEAM END DESIGNATION NOTE

S(X)-G(X)-P(X)

S(X) = SPAN NO.
G(X) = GIRDER NO.
P(X) = PIER NO.

DENOTES LOCATION OF BEAM END DETERIORATION

DENOTES LOCATION OF DIAPHRAGM REPLACEMENT

REV.	DATE	REVISION DESCRIPTION	SHEET NO.

THE INFORMATION, INCLUDING ESTIMATED QUANTITIES OF WORK, SHOWN ON THESE SHEETS IS BASED ON LIMITED INVESTIGATIONS BY THE STATE AND IS IN NO WAY WARRANTED TO INDICATE THE CONDITIONS OF ACTUAL QUANTITIES OF WORK WHICH WILL BE REQUIRED.

Plotted Date: 1/12/2021

DESIGNER/DRAFTER: ECO
CHECKED BY: ZMK
SCALE AS NOTED

STATE OF CONNECTICUT
DEPARTMENT OF TRANSPORTATION

Filename: ...\0042-0325 Framing Plan - Span 3 and 4.dgn

SIGNATURE/ BLOCK:
OFFICE OF ENGINEERING
APPROVED BY:
Andrew J Cardinali

PROJECT TITLE:
REHABILITATION OF BRIDGE NO. 05844A CARRYING I-84 OVER ROUTE 15

TOWN: **EAST HARTFORD**

DRAWING TITLE:
FRAMING PLAN SPAN 3 AND 4

PROJECT NO. **0042-0325**
DRAWING NO. **S-20**
SHEET NO. **04.20**

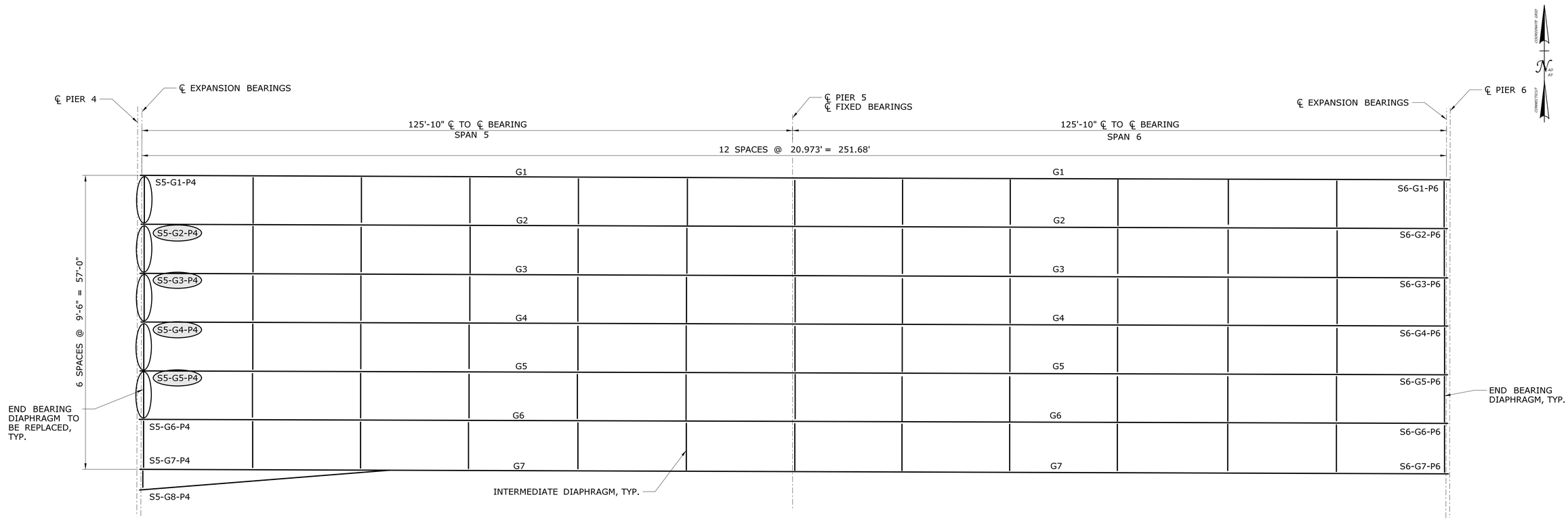

FRAMING PLAN - SPAN 5 AND 6

SCALE: 1" = 10'

BEAM END DESIGNATION NOTE

S(X)-G(X)-P(X)

S(X) = SPAN NO.
G(X) = GIRDER NO.
P(X) = PIER NO.

DENOTES LOCATION OF BEAM END DETERIORATION

DENOTES LOCATION OF DIAPHRAGM REPLACEMENT

REV.	DATE	REVISION DESCRIPTION	SHEET NO.

THE INFORMATION, INCLUDING ESTIMATED QUANTITIES OF WORK, SHOWN ON THESE SHEETS IS BASED ON LIMITED INVESTIGATIONS BY THE STATE AND IS IN NO WAY WARRANTED TO INDICATE THE CONDITIONS OF ACTUAL QUANTITIES OF WORK WHICH WILL BE REQUIRED.

Plotted Date: 1/12/2021

DESIGNER/DRAFTER: ECO
CHECKED BY: ZMK
SCALE AS NOTED

STATE OF CONNECTICUT
DEPARTMENT OF TRANSPORTATION

Filename: ...\0042-0325 Framing Plan - Span 5 and 6.dgn

SIGNATURE/ BLOCK:
OFFICE OF ENGINEERING
APPROVED BY:

PROJECT TITLE:
REHABILITATION OF BRIDGE NO. 05844A CARRYING I-84 OVER ROUTE 15

TOWN: **EAST HARTFORD**

DRAWING TITLE: **FRAMING PLAN SPAN 5 AND 6**

PROJECT NO. **0042-0325**
DRAWING NO. **S-21**
SHEET NO. **04.21**

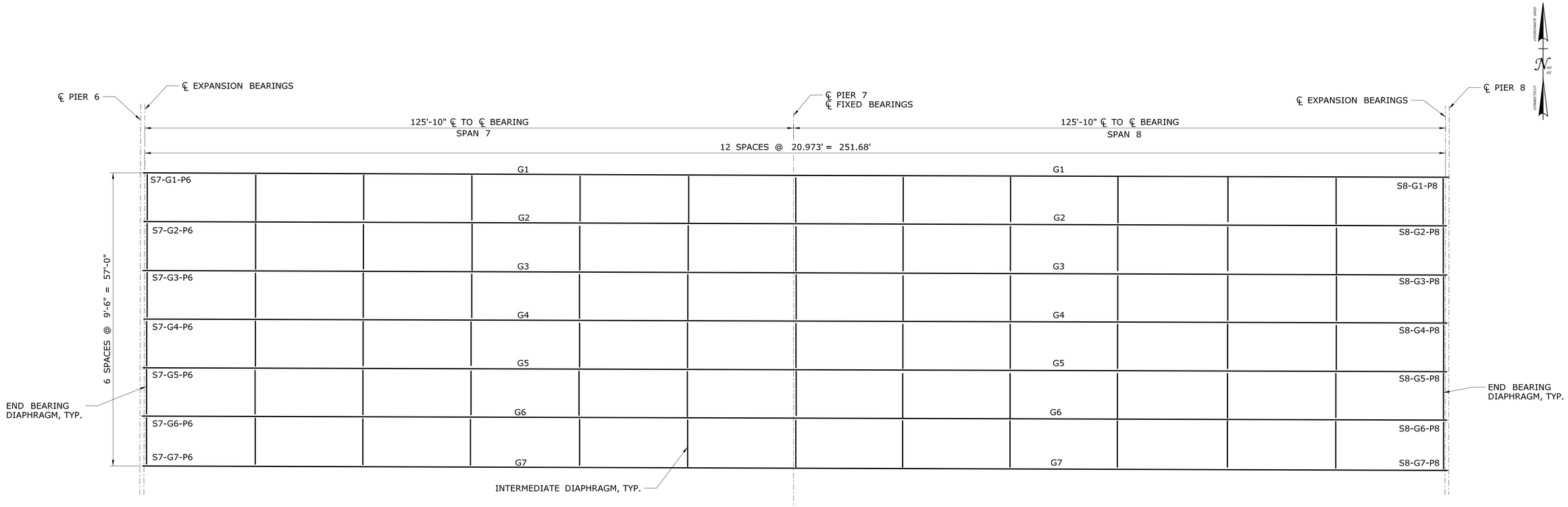

FRAMING PLAN - SPAN 7 AND 8

SCALE: 1" = 10'

BEAM END DESIGNATION NOTE

S(X)-G(X)-P(X)

S(X) = SPAN NO.
G(X) = GIRDER NO.
P(X) = PIER NO.

REV.	DATE	REVISION DESCRIPTION	SHEET NO.

THE INFORMATION, INCLUDING ESTIMATED QUANTITIES OF WORK, SHOWN ON THESE SHEETS IS BASED ON LIMITED INVESTIGATIONS BY THE STATE AND IS IN NO WAY WARRANTED TO INDICATE THE CONDITIONS OF ACTUAL QUANTITIES OF WORK WHICH WILL BE REQUIRED.

Plotted Date: 1/12/2021

DESIGNER/DRAFTER: ECO
CHECKED BY: ZMK
SCALE AS NOTED

STATE OF CONNECTICUT
DEPARTMENT OF TRANSPORTATION

Filename: ...\0042-0325 Framing Plan - Span 7 and 8.dgn

SIGNATURE/BLOCK:
OFFICE OF ENGINEERING
APPROVED BY:

PROJECT TITLE:
REHABILITATION OF BRIDGE NO. 05844A CARRYING I-84 OVER ROUTE 15

TOWN: **EAST HARTFORD**

DRAWING TITLE: **FRAMING PLAN SPAN 7 AND 8**

PROJECT NO. **0042-0325**
DRAWING NO. **S-22**
SHEET NO. **04.22**

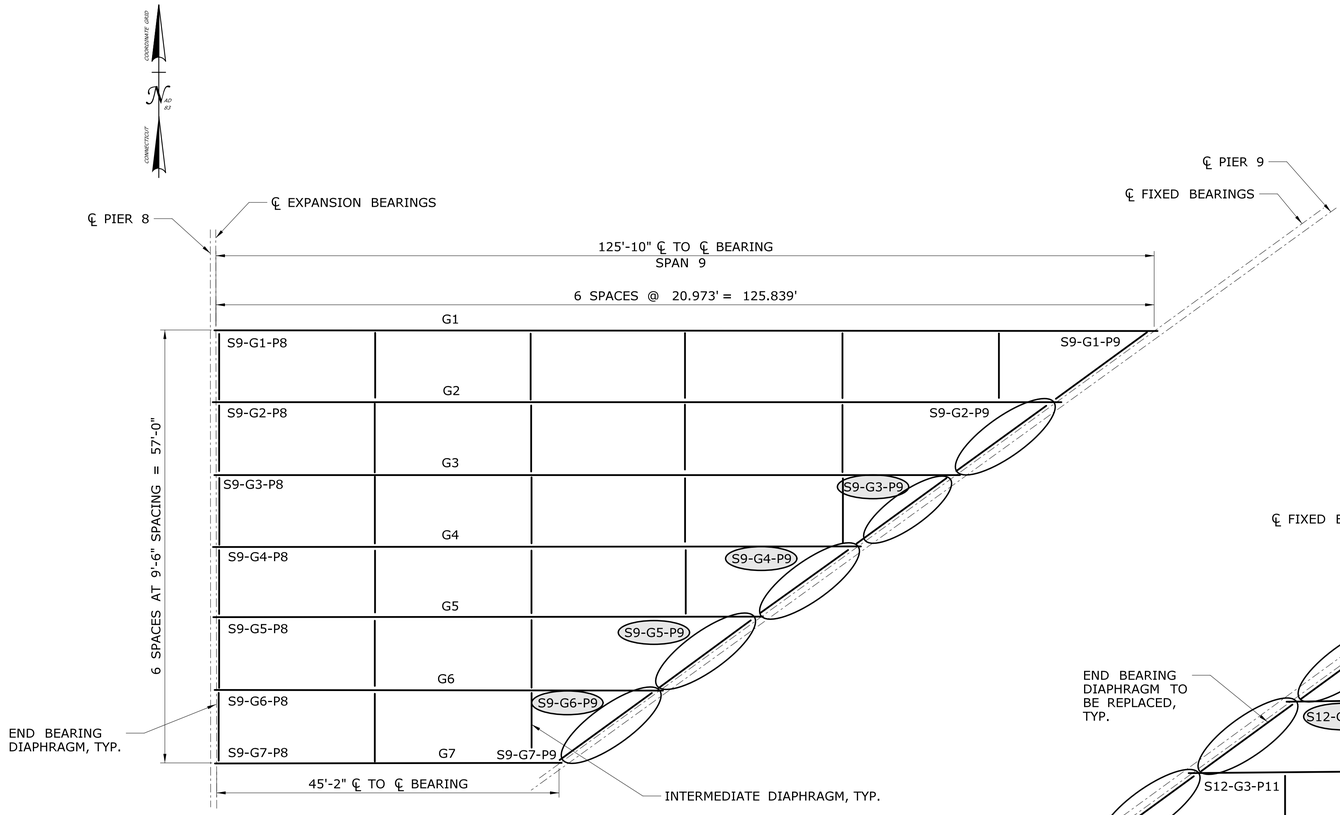

FRAMING PLAN - SPAN 9

SCALE: 1" = 10'

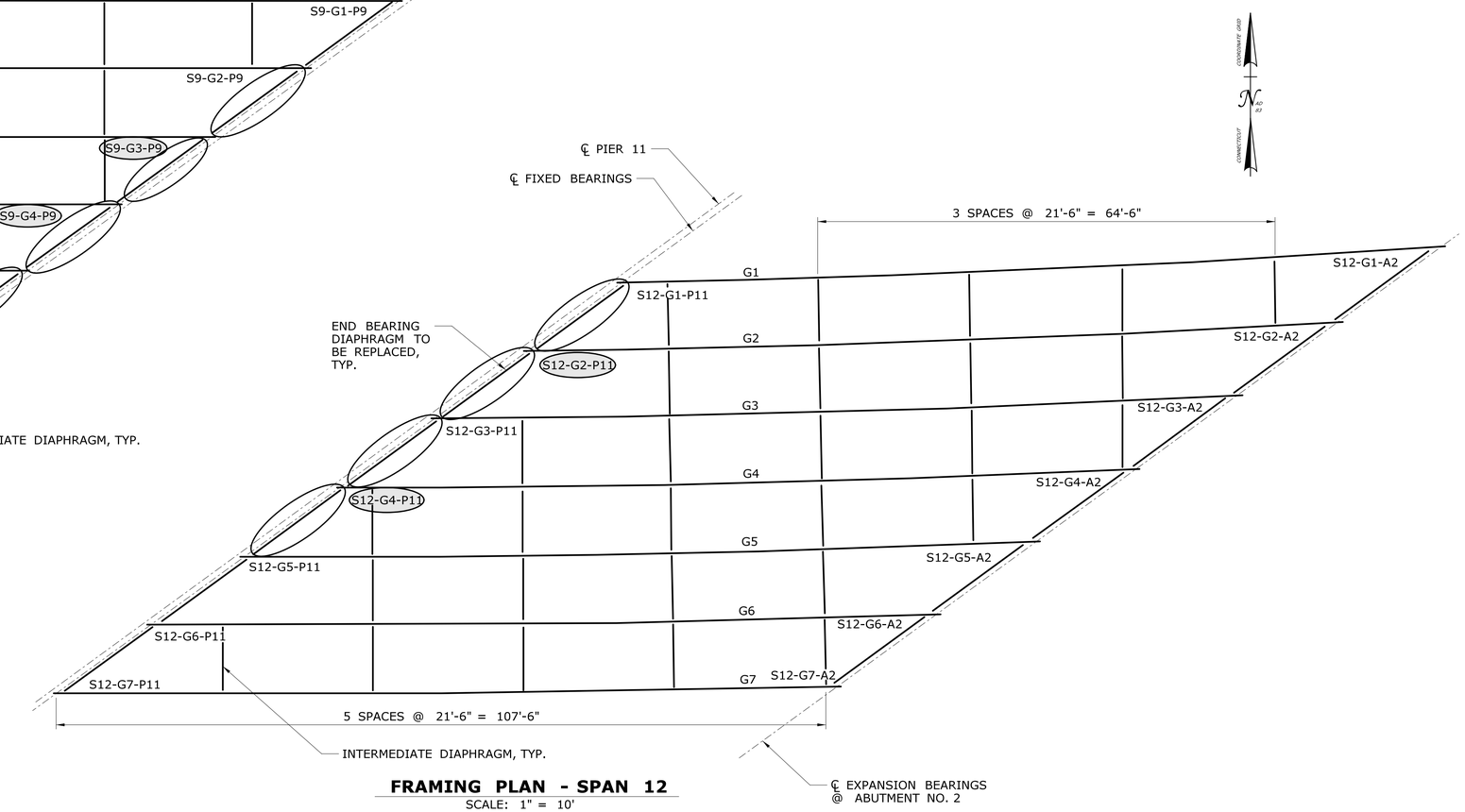

FRAMING PLAN - SPAN 12

SCALE: 1" = 10'

BEAM END DESIGNATION NOTE

S(X)-G(X)-P(X)
S(X)-G(X)-A(X)

S(X) = SPAN NO.
G(X) = GIRDER NO.
P(X) = PIER NO.
A(X) = ABUTMENT NO.

DENOTES LOCATION OF BEAM END DETERIORATION

DENOTES LOCATION OF DIAPHRAGM REPLACEMENT

REV.	DATE	REVISION DESCRIPTION	SHEET NO.

THE INFORMATION, INCLUDING ESTIMATED QUANTITIES OF WORK, SHOWN ON THESE SHEETS IS BASED ON LIMITED INVESTIGATIONS BY THE STATE AND IS IN NO WAY WARRANTED TO INDICATE THE CONDITIONS OF ACTUAL QUANTITIES OF WORK WHICH WILL BE REQUIRED.

Plotted Date: 1/12/2021

DESIGNER/DRAFTER: ECO
CHECKED BY: ZMK
SCALE AS NOTED

STATE OF CONNECTICUT
DEPARTMENT OF TRANSPORTATION

Filename: ...\0042-0325 Framing Plan - Span 9 and 12.dgn

SIGNATURE/BLOCK: **OFFICE OF ENGINEERING**
APPROVED BY:

PROJECT TITLE: **REHABILITATION OF BRIDGE NO. 05844A CARRYING I-84 OVER ROUTE 15**

TOWN: **EAST HARTFORD**

DRAWING TITLE: **FRAMING PLAN SPAN 9 AND 12**

PROJECT NO. **0042-0325**
DRAWING NO. **S-23**
SHEET NO. **04.23**

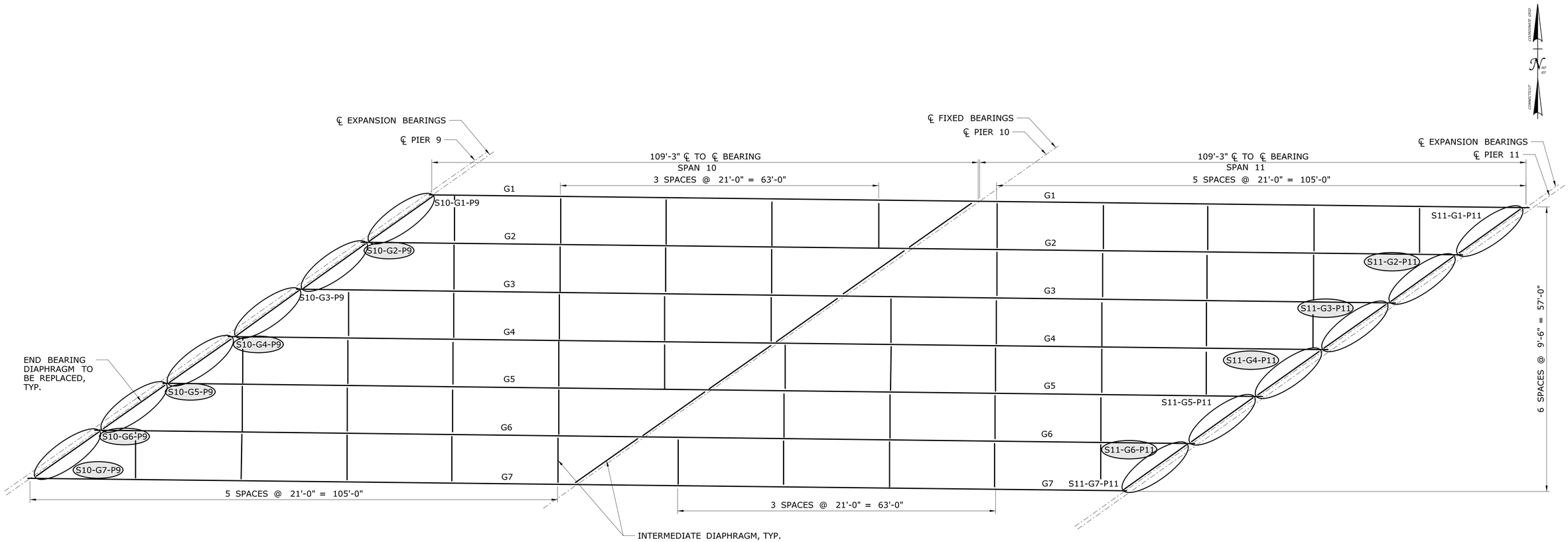

FRAMING PLAN - SPAN 10 AND 11

SCALE: 1" = 10'

BEAM END DESIGNATION NOTE

S(X)-G(X)-P(X)

S(X) = SPAN NO.
G(X) = GIRDER NO.
P(X) = PIER NO.

DENOTES LOCATION OF BEAM END DETERIORATION

DENOTES LOCATION OF DIAPHRAGM REPLACEMENT

REV.	DATE	REVISION DESCRIPTION	SHEET NO.

THE INFORMATION, INCLUDING ESTIMATED QUANTITIES OF WORK, SHOWN ON THESE SHEETS IS BASED ON LIMITED INVESTIGATIONS BY THE STATE AND IS IN NO WAY WARRANTED TO INDICATE THE CONDITIONS OF ACTUAL QUANTITIES OF WORK WHICH WILL BE REQUIRED.

Plotted Date: 1/12/2021

DESIGNER/DRAFTER: ECO
CHECKED BY: ZMK
SCALE AS NOTED

STATE OF CONNECTICUT
DEPARTMENT OF TRANSPORTATION

Filename: ...\0042-0325 Framing Plan - Span 10 and 11.dgn

SIGNATURE/ BLOCK:
OFFICE OF ENGINEERING
APPROVED BY:

PROJECT TITLE:
REHABILITATION OF BRIDGE NO. 05844A CARRYING I-84 OVER ROUTE 15

TOWN: EAST HARTFORD

DRAWING TITLE: FRAMING PLAN SPAN 10 AND 11

PROJECT NO. 0042-0325
DRAWING NO. S-24
SHEET NO. 04.24

UHPC BEAM END REPAIR TABLE

BEAM END LOCATION	SPAN	GIRDER	DETERIORATION (%)	APPROXIMATE LENGTH OF DETERIORATION	APPROXIMATE HEIGHT OF DETERIORATION	TYPE	NUMBER OF STUDS PER LINE									LENGTH OF UHPC BLOCK	HEIGHT OF UHPC BLOCK	HEIGHT OF PAINT ABOVE UHPC
							A1	B1	A2	B2	A3	B3	A4	B4	TOTAL			
S1-G9-A1	1	9	28	6"	60"	1B	4	4	4	4	4	4	4	4	16	27"	30"	30"
S1-G3-P1	1	3	35	8"	8"	1A	4	4	4	4	4	4	4	4	16	22"	26"	34"
S1-G4-P1	1	4	19	60"	6"	1A	4	4	4	4	4	4	4	4	16	22"	22"	38"
S1-G5-P1	1	5	50	84"	5"	1A	4	4	4	4	4	4	4	4	16	22"	22"	38"
S1-G6-P1	1	6	41	36"	7"	1A	4	4	4	4	4	4	4	4	16	22"	26"	34"
S1-G7-P1	1	7	21	60"	6"	1A	4	4	4	4	4	4	4	4	16	22"	22"	38"
S1-G8-P1	1	8	19	48"	3"	1A	4	4	4	4	4	4	4	4	16	22"	22"	38"
S2-G3-P1	2	3	21	33"	3"	1A	4	4	4	4	4	4	4	4	16	22"	22"	38"
S2-G4-P1	2	4	31	72"	5"	1A	4	4	4	4	4	4	4	4	16	22"	22"	38"
S2-G5-P1	2	5	31	90"	6"	1A	4	4	4	4	4	4	4	4	16	22"	22"	38"
S2-G6-P1	2	6	26	102"	5"	1A	4	4	4	4	4	4	4	4	16	22"	22"	38"
S2-G7-P1	2	7	26	96"	8"	1A	4	4	4	4	4	4	4	4	16	22"	26"	34"
S2-G8-P1	2	8	26	60"	4"	1A	4	4	4	4	4	4	4	4	16	22"	22"	38"
S2-G2-P2	2	2	24	48"	3"	1A	4	4	4	4	4	4	4	4	16	22"	22"	38"
S2-G4-P2	2	4	31	60"	5"	1A	4	4	4	4	4	4	4	4	16	22"	22"	38"
S2-G5-P2	2	5	35	36"	5"	1A	4	4	4	4	4	4	4	4	16	22"	22"	38"
S2-G6-P2	2	6	26	36"	4"	1A	4	4	4	4	4	4	4	4	16	22"	22"	38"
S2-G7-P2	2	7	31	36"	6"	1A	4	4	4	4	4	4	4	4	16	22"	22"	38"
S2-G8-P2	2	8	24	36"	3"	1A	4	4	4	4	4	4	4	4	16	22"	22"	38"
S2-G10-P2	2	10	18	1310"	16"	1B	4	4	4	4	4	4	4	4	16	22"	30"	30"
S3-G5-P2	3	5	31	60"	10"	1A	4	4	4	4	4	4	4	4	16	22"	26"	34"
S3-G6-P2	3	6	35	96"	6"	1A	4	4	4	4	4	4	4	4	16	22"	22"	38"
S3-G7-P2	3	7	31	48"	9"	1A	4	4	4	4	4	4	4	4	16	22"	26"	34"
S3-G6-P3	3	6	22	96"	5"	1A	4	4	4	4	4	4	4	4	16	22"	22"	38"
S4-G4-P3	4	4	21	48"	6"	1A	4	4	4	4	4	4	4	4	16	22"	22"	38"
S4-G6-P3	4	6	26	72"	5"	1A	4	4	4	4	4	4	4	4	16	22"	22"	38"
S4-G8-P3	4	8	26	72"	6"	1A	4	4	4	4	4	4	4	4	16	22"	22"	38"
S4-G9-P3	4	9	31	72"	6"	1A	4	4	4	4	4	4	4	4	16	22"	22"	38"
S4-G2-P4	4	2	22	12"	7"	1A	4	4	4	4	4	4	4	4	16	22"	26"	38"
S4-G4-P4	4	4	36	60"	8"	1A	4	4	4	4	4	4	4	4	16	22"	26"	38"
S5-G2-P4	5	2	33	36"	4"	1A	4	4	4	4	4	4	4	4	16	22"	22"	38"
S5-G3-P4	5	3	23	48"	5"	1A	4	4	4	4	4	4	4	4	16	22"	22"	38"
S5-G4-P4	5	4	23	48"	5"	1A	4	4	4	4	4	4	4	4	16	22"	22"	38"
S5-G5-P4	5	5	23	48"	5"	1A	4	4	4	4	4	4	4	4	16	22"	22"	38"
S9-G3-P9	9	3	19	37"	2"	1A	4	4	4	4	4	4	4	4	16	22"	18"	42"
S9-G4-P9	9	4	29	37"	12"	1A	4	4	4	4	4	4	4	4	16	22"	30"	30"
S9-G5-P9	9	5	17	49"	4"	1A	4	4	4	4	4	4	4	4	16	22"	22"	38"
S9-G6-P9	9	6	19	49"	4"	1A	4	4	4	4	4	4	4	4	16	22"	22"	38"
S10-G2-P9	10	2	19	61"	3"	2A	4	4	4	4	4	4	4	4	16	22"	22"	38"
S10-G4-P9	10	4	19	37"	6"	2A	4	4	4	4	4	4	4	4	16	22"	22"	38"
S10-G5-P9	10	5	28	49"	5"	2A	4	4	4	4	4	4	4	4	16	22"	22"	38"
S10-G6-P9	10	6	21	49"	5"	2A	4	4	4	4	4	4	4	4	16	22"	22"	38"
S10-G7-P9	10	7	19	85"	10"	2B	4	4	4	4	4	4	4	4	16	22"	26"	34"
S11-G2-P11	11	2	16	25"	3"	2A	4	4	4	4	4	4	4	4	16	22"	22"	38"
S11-G3-P11	11	3	53	73"	18"	2A	4	4	4	4	4	4	4	4	16	22"	30"	30"
S11-G4-P11	11	4	30	121"	12"	2A	4	4	4	4	4	4	4	4	16	22"	30"	30"
S11-G6-P11	11	6	21	25"	2"	2A	4	4	4	4	4	4	4	4	16	22"	18"	42"
S12-G2-P11	12	2	24	241"	4"	2A	4	4	4	4	4	4	4	4	16	22"	22"	38"
S12-G4-P11	12	4	39	181"	4"	2A	4	4	4	4	4	4	4	4	16	22"	22"	38"

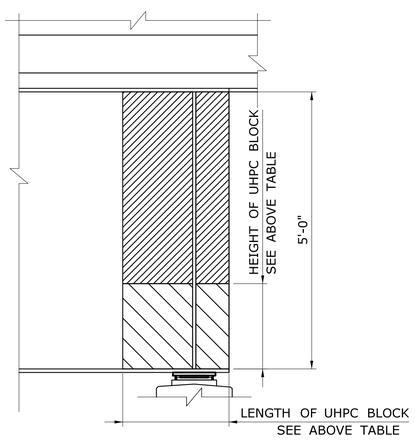

SURFACE PREPARATION LIMITS

SCALE: 3/4" = 1'-0"

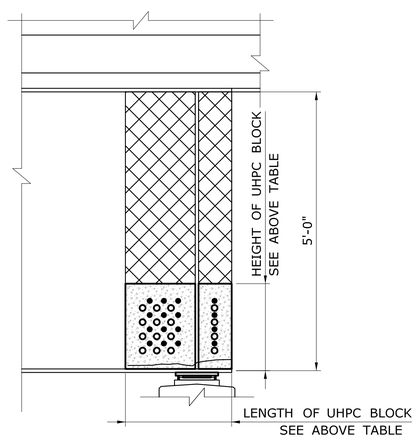

PAINTING LIMITS

SCALE: 3/4" = 1'-0"

LEGEND

PORTION OF BEAM TO BE CLEANED AND PAID FOR UNDER THE ITEM "BEAM END REPAIRS WITH ULTRA HIGH PERFORMACE CONCRETE - PARTIAL HEIGHT"

PORTION OF BEAM TO BE CLEANED AND PAID FOR UNDER THE ITEM "LOCALIZED PAINT REMOVAL AND FIELD PAINTING OF EXISTING STEEL"

PORTION OF BEAM TO BE PAINTED AND PAID FOR UNDER THE ITEM "LOCALIZED PAINT REMOVAL AND FIELD PAINTING OF EXISTING STEEL"

BEAM END REHABILITATION NOTES

1. THE FRAMING PLANS SHOWN ON DRAWING NOS. S-19 THROUGH S-24 HAVE BEEN PREPARED BASED ON INFORMATION GATHERED DURING FIELD INSPECTION AND FROM THE EXISTING BRIDGE PLANS. ACTUAL FIELD CONDITIONS MAY VARY AND MAY REQUIRE MODIFICATIONS TO CONSTRUCTION DETAILS AND WORK QUANTITIES. THE CONTRACTOR SHALL PERFORM ALL WORK IN ACCORDANCE WITH FIELD CONDITIONS OR AS DIRECTED BY THE ENGINEER.
2. NO PAINT SHALL BE APPLIED UNDER THE UHPC BLOCK.
3. THE "UHPC BEAM END REPAIR TABLE" INDICATES APPROXIMATE LIMITS OF THE DETERIORATED AREAS OF THE BEAM ENDS. ADDITIONAL LIMITS OR LOCATIONS MAY BE ADDED DURING CONSTRUCTION AS APPROVED BY THE ENGINEER.
4. BEAM ENDS SHALL BE REPAIRED BY ENCASING THE BEAM END IN ULTRA HIGH PERFORMANCE CONCRETE (UHPC) AS SHOWN ON DRAWING NO. S-26 AND IN ACCORDANCE WITH THE SPECIAL PROVISION "BEAM END REPAIRS WITH ULTRA HIGH PERFORMACE CONCRETE - PARTIAL HEIGHT".
5. THE CONTRACTOR SHALL PROVIDE ACCESS TO BEAM END REPAIR LOCATIONS SHOWN ON THE PLANS. SEE SPECIAL PROVISIONS.
6. HEADED STUDS SHALL BE WELDED TO CLEAN SECTIONS OF THE WEB. STUDS MAY BE WELDED IN SECTIONS OF THE WEB WITH MINOR (UP TO 1/16") SECTION LOSS. STUDS SHALL BE PAID FOR UNDER THE ITEM "WELDED STUDS."
7. THE STUD SPACING SHALL BE A MINIMUM OF 3" AND A MAXIMUM OF 6". THE SPACING MAY BE VARIED WITHIN THIS RANGE TO ACCOMMODATE THE NUMBER OF STUDS SHOWN IN THE PLANS. THE STUD PATTERN SHALL BE LAID OUT BY THE CONTRACTOR AND APPROVED BY THE ENGINEER IN THE FIELD PRIOR TO WELDING THE STUDS.
8. THE NUMBER OF STUDS SHOWN IN THE PLANS IS A MINIMUM VALUE BASED ON ANTICIPATED FIELD CONDITIONS. SHOULD THE CONTRACTOR BE UNABLE TO ACCOMMODATE THE MINIMUM NUMBER OF STUDS SHOWN IN THE PLANS DUE TO THE AREA OF DETERIORATED STEEL BEING LARGER THAN ANTICIPATED, THE ENGINEER SHALL BE NOTIFIED IMMEDIATELY. WORK AT THAT LOCATION SHALL NOT PROCEED UNTIL DIRECTION IS GIVEN BY THE ENGINEER.
9. ALL HEADED STUDS SHALL BE WELDED USING A STUD GUN. AT LOCATIONS WHERE THE USE OF A STUD GUN IS NOT POSSIBLE DUE TO LIMITED CLEARANCE, UP TO A MAXIMUM OF 3 STUDS MAY BE WELDED USING AN ALL-AROUND 5/16" FILLET WELD. IF MORE THAN 3 STUDS IN ANY GIVEN BEAM END NEED TO BE WELDED USING A FILLET WELD, THE ENGINEER SHALL BE NOTIFIED. FILLET WELDED STUDS SHALL BE PLACED AT A SPACING OF 6".
10. THE DISTANCE FROM THE TOP OF THE BOTTOM FLANGE TO THE FIRST STUD SHALL BE A MINIMUM OF 6", BUT NOT LESS THAN 2" BEYOND THE DETERIORATED STEEL.
11. STUD WELDING DETAILS, PROCEDURES, AND TESTING METHODS SHALL CONFORM TO THE AASHTO/AWS D1.5/1.5: 2015 - BRIDGE WELDING CODE, UNLESS OTHERWISE NOTED ON THE PLANS OR IN THE SPECIAL PROVISION, "WELDED STUDS".
12. ALL EXPOSED INTERFACES BETWEEN THE UHPC PANEL AND STEEL GIRDER SHALL BE SEALED WITH JOINT SEALANT. THIS SHALL BE PAID FOR UNDER THE ITEM "BEAM END REPAIRS WITH ULTRA HIGH PERFORMANCE CONCRETE - PARTIAL HEIGHT."
13. FORMWORK SHALL BE SEALED TO CONTAIN THE FLUIDITY OF THE UHPC AND SHALL BE APPROVED BY THE ENGINEER PRIOR TO POURING THE UHPC, SEE SPECIAL PROVISIONS.
14. MAXIMUM HEIGHT OF UHPC BLOCK SHALL NOT EXCEED 30" UNLESS APPROVED BY THE ENGINEER. ONCE THE BEAM ENDS ARE CLEANED, IF ADJUSTMENTS NEED TO BE MADE TO THE PLACEMENT OF STUDS IN ORDER TO WELD ONTO NON-DETERIORATED STEEL, THE ENGINEER SHALL BE NOTIFIED IMMEDIATELY.
15. IF THE TOP PITCH OF THE UHPC PANEL CANNOT BE MET DURING CASTING, THE CONTRACTOR SHALL GRIND THE TOP OF THE PANEL TO THE REQUIRED SLOPE AFTER THE REMOVAL OF THE FORMS. THE COST OF THIS WORK SHALL BE INCLUDED IN THE ITEM "BEAM END REPAIRS WITH ULTRA HIGH PERFORMANCE CONCRETE - PARTIAL HEIGHT."
16. THE SURFACE PREPARATION OF THE EXISTING STEEL FOR AREAS BENEATH THE UHPC BLOCK SHALL BE PAID FOR UNDER THE ITEM "BEAM END REPAIRS WITH ULTRA HIGH PERFORMANCE CONCRETE - PARTIAL HEIGHT." THE SURFACE PREPARATION OF THE EXISTING STEEL ABOVE THE UHPC BLOCK AND WITHIN THE LIMITS SHOWN ON THIS SHEET SHALL BE PAID FOR UNDER THE ITEM "LOCALIZED PAINT REMOVAL AND FIELD PAINTING OF EXISTING STEEL."

REV.	DATE	REVISION DESCRIPTION	SHEET NO.

THE INFORMATION, INCLUDING ESTIMATED QUANTITIES OF WORK, SHOWN ON THESE SHEETS IS BASED ON LIMITED INVESTIGATIONS BY THE STATE AND IS IN NO WAY WARRANTED TO INDICATE THE CONDITIONS OF ACTUAL QUANTITIES OF WORK WHICH WILL BE REQUIRED.

Plotted Date: 1/12/2021

DESIGNER/DRAFTER: ECO
CHECKED BY: ZMK
SCALE AS NOTED

STATE OF CONNECTICUT
DEPARTMENT OF TRANSPORTATION

Filename: ..\0042-0325 UHPC Beam End Repair Details - 1.dgn

SIGNATURE/BLOCK: OFFICE OF ENGINEERING
APPROVED BY: Andrew J. Cardinali

PROJECT TITLE: REHABILITATION OF BRIDGE NO. 05844A CARRYING I-84 OVER ROUTE 15

TOWN: EAST HARTFORD

DRAWING TITLE: UHPC BEAM END REPAIR DETAILS - 1

PROJECT NO. 0042-0325
DRAWING NO. S-25
SHEET NO. 04.25

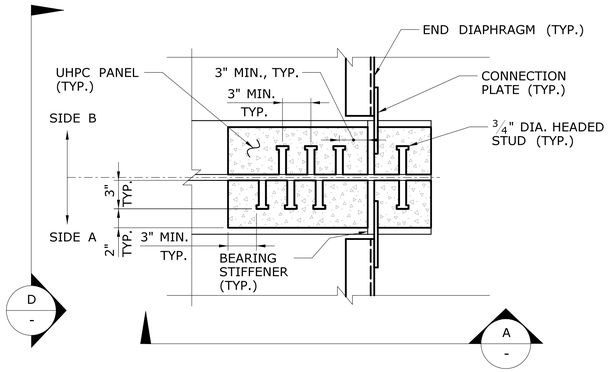

SHEAR CONNECTOR DETAIL TYPE 1A REPAIR

SCALE: 1½" = 1'

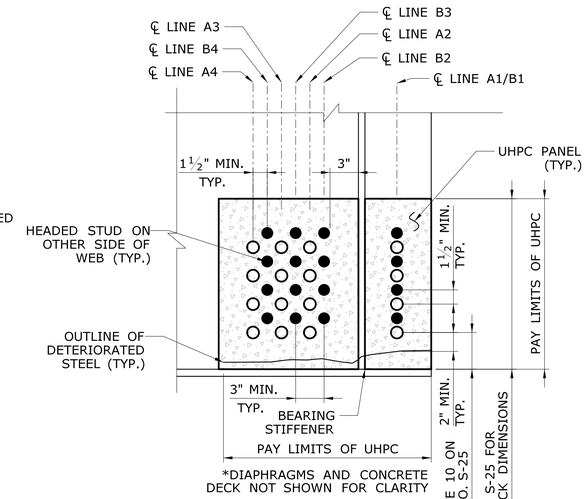

SECTION A -

SCALE: 1½" = 1'

TYPE 1 BEAM END REPAIR

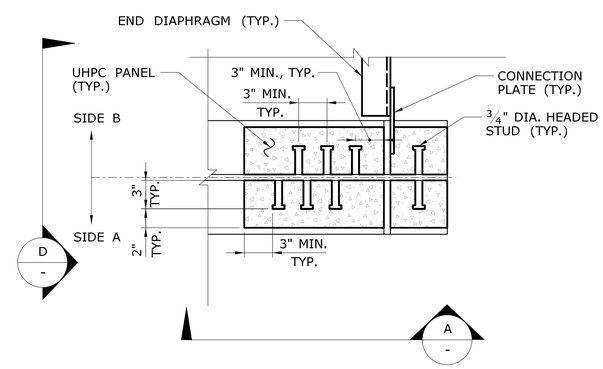

SHEAR CONNECTOR DETAIL TYPE 1B REPAIR

SCALE: 1½" = 1'

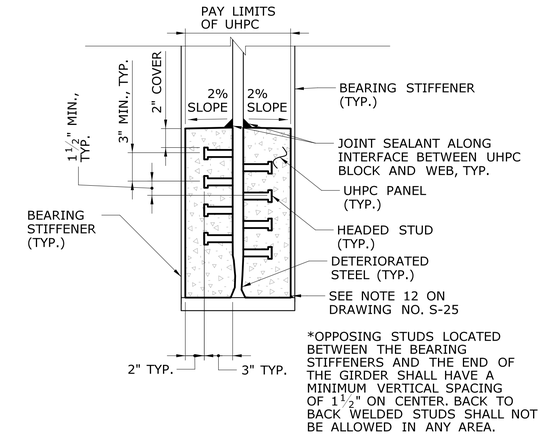

SECTION D -

SCALE: 1½" = 1'

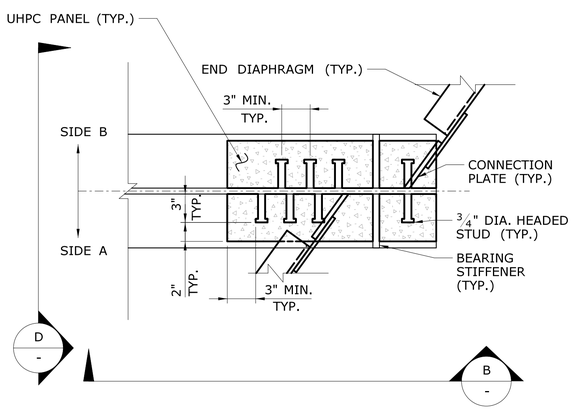

SHEAR CONNECTOR DETAIL TYPE 2A REPAIR

SCALE: 1½" = 1'

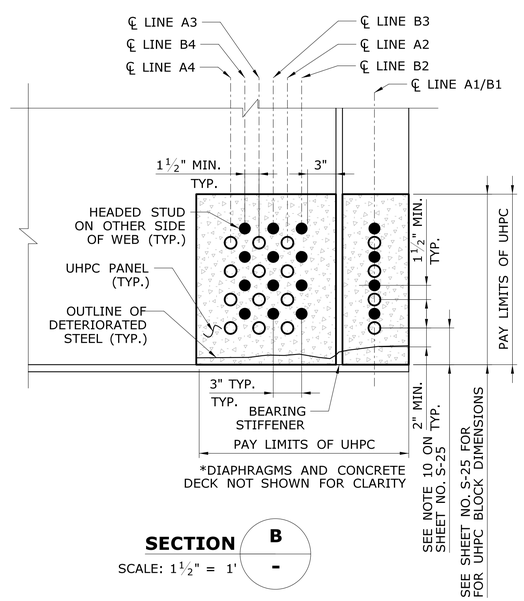

SECTION B -

SCALE: 1½" = 1'

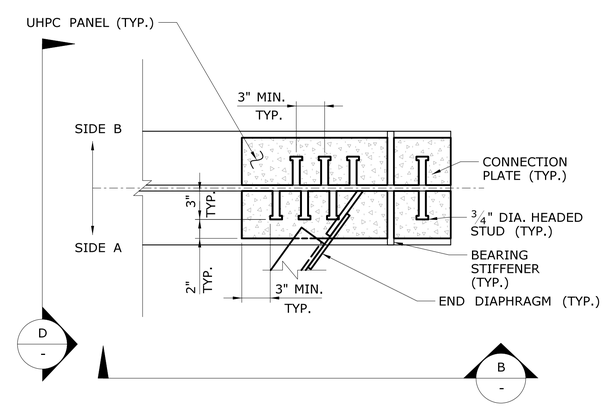

SHEAR CONNECTOR DETAIL TYPE 2B REPAIR

SCALE: 1½" = 1'

TYPE 2 BEAM END REPAIR

REV.	DATE	REVISION DESCRIPTION	SHEET NO.

THE INFORMATION, INCLUDING ESTIMATED QUANTITIES OF WORK, SHOWN ON THESE SHEETS IS BASED ON LIMITED INVESTIGATIONS BY THE STATE AND IS IN NO WAY WARRANTED TO INDICATE THE CONDITIONS OF ACTUAL QUANTITIES OF WORK WHICH WILL BE REQUIRED.

Plotted Date: 1/12/2021

DESIGNER/DRAFTER: ECO
CHECKED BY: ZMK
SCALE AS NOTED

STATE OF CONNECTICUT
DEPARTMENT OF TRANSPORTATION

Filename: ...\0042-0325 UHPC Beam End Repair Details - 2.dgn

SIGNATURE/BLOCK: **OFFICE OF ENGINEERING**
APPROVED BY:

PROJECT TITLE: **REHABILITATION OF BRIDGE NO. 05844A CARRYING I-84 OVER ROUTE 15**

TOWN: **EAST HARTFORD**

DRAWING TITLE: **UHPC BEAM END REPAIR DETAILS - 2**

PROJECT NO. **0042-0325**
DRAWING NO. **S-26**
SHEET NO. **04.26**

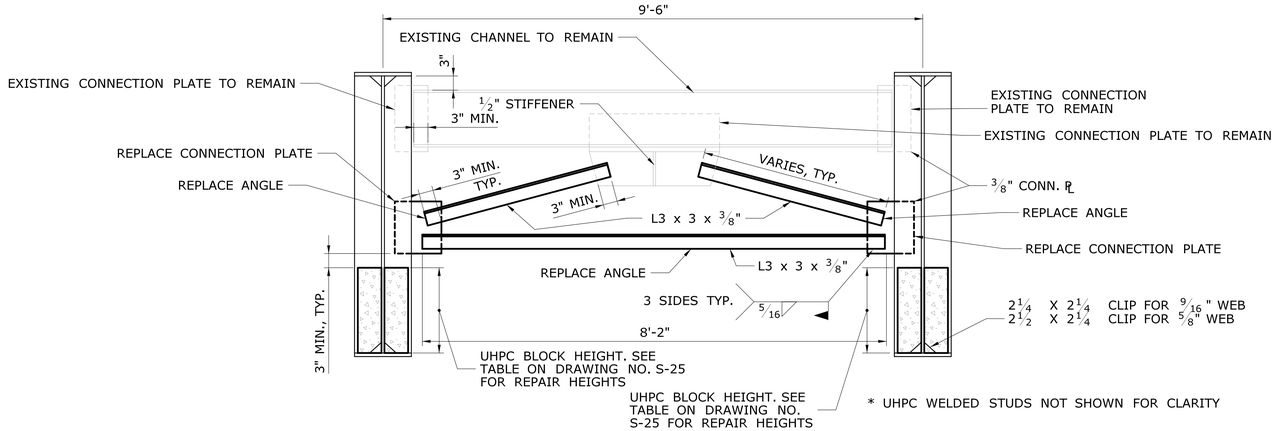

TYPICAL NEW DIAPHRAGM DETAIL
GIRDERS 1-6, PIERS 1-8

SCALE: 3/4" = 1'-0"

STRUCTURAL STEEL NOTES

1. ALL STRUCTURAL STEEL PLATES SHALL CONFORM TO AASHTO M270 GRADE 50W T2. ALL STRUCTURAL STEEL ANGLES AND CONNECTION PLATES FOR THE DIAPHRAGM INSTALLATION SHALL CONFORM TO AASHTO M270 GRADE 36 T2.
2. WELDING DETAILS, PROCEDURES AND TESTING METHODS SHALL CONFORM TO THE ANSI/AASHTO/AWS D1.5 - BRIDGE WELDING CODE, UNLESS OTHERWISE NOTED ON THE PLANS.
3. ALL FIELD FILLET WELDS SHALL BE INSPECTED IN THEIR ENTIRETY BY THE MAGNETIC PARTICLE METHOD.
4. ALL DIMENSIONS SHOWN ON THE PLANS SHALL BE VERIFIED IN THE FIELD PRIOR TO DIAPHRAGM FABRICATION TO ENSURE PROPER FIT UP OF THE STEEL REPAIRS.
5. ALL FAYING SURFACES SHALL BE THOROUGHLY CLEANED OF ALL DEBRIS, SURFACE RUST, OR ANY OTHER FOREIGN MATTER PRIOR TO INSTALLATION OF NEW CONNECTION PLATES AND ANGLES.
6. STRUCTURAL STEEL CONNECTION PLATES AND ANGLES SHALL BE PRIMED AND PAINTED IN ACCORDANCE WITH THE SPECIAL PROVISION, "STRUCTURAL STEEL (SITE NO. 1)." THE NEW PAINT COLOR SHALL CLOSELY MATCH THE EXISTING WEATHERING STEEL GIRDERS.
7. STEEL ANGLE LENGTH OF THE DIAPHRAGMS WILL VARY BASED ON THE INDIVIDUAL UHPC BLOCK HEIGHTS AT EACH BEAM END. DIAGONAL ANGLE LENGTH SHALL BE DETERMINED BY THE CONTRACTOR AT EACH LOCATION. THE CONTRACTOR IS PERMITTED TO CUT THE ANGLES TO LENGTH. IF ANGLES ARE CUT TO LENGTH, THE STEEL IN AREAS WHERE THE CUT WAS MADE SHALL BE TOUCHED UP WITH ZINC PAINT AT NO ADDITIONAL COST TO THE STATE.
8. REMOVAL OF EXISTING STEEL SHALL BE PAID FOR UNDER "REMOVAL OF EXISTING DIAPHRAGMS." THE MODIFIED DIAPHRAGMS SHALL BE PAID FOR UNDER "STRUCTUAL STEEL (SITE NO. 1)."

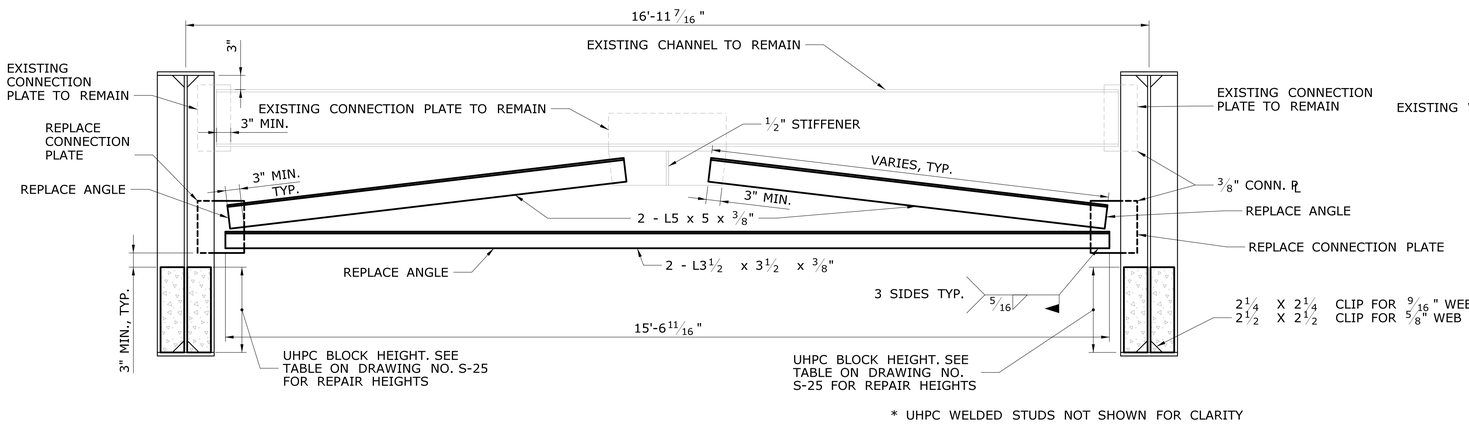

TYPICAL NEW DIAPHRAGM DETAIL
ALL GIRDERS, PIERS 9-11

SCALE: 3/4" = 1'-0"

STRUCTURAL STEEL FOR DIAPHRAGMS		
STEEL SECTION	QUANTITY	APPROXIMATE WEIGHT
L3 x 3 x 3/8" - APPROXIMATE 8'-2" LENGTH	46	59 LBS.
L3 x 3 x 3/8" - APPROXIMATE 3'-4" LENGTH	46	24 LBS.
CONNECTION PLATE(*) - 9 7/8" X 11" X 3/8"	134	12 LBS.
BENT CONNECTION PLATE(*) - 6" X 8" X 1/2"	42	6 LBS.

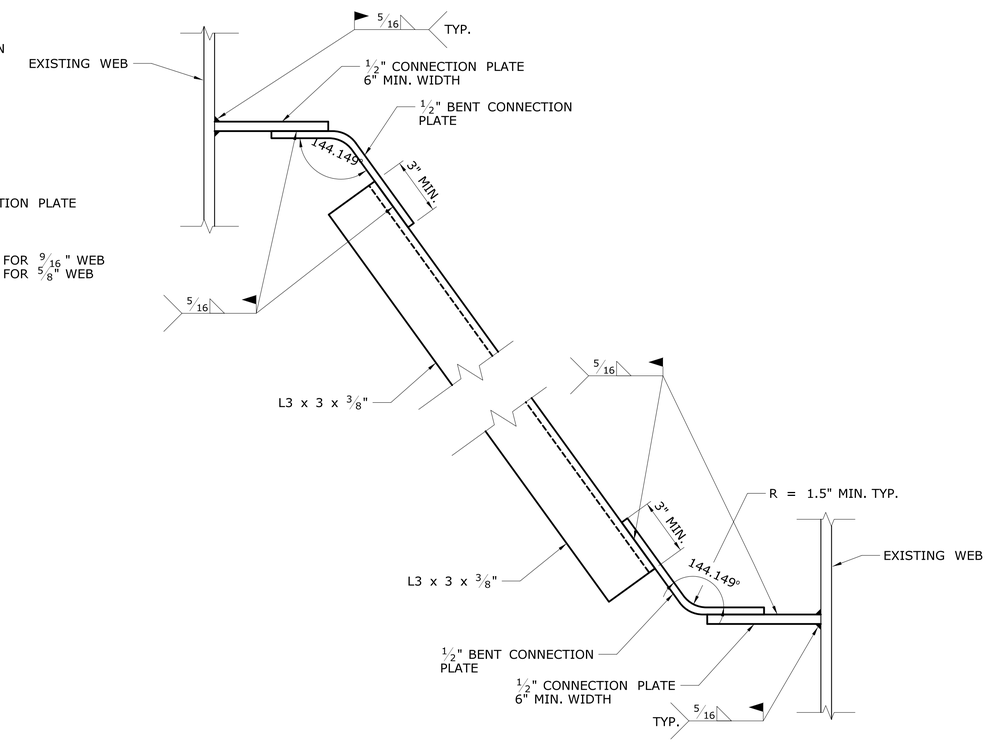

PLAN - BENT CONNECTION PLATE DETAIL

SCALE: 3" = 1'-0"

REV.	DATE	REVISION DESCRIPTION	SHEET NO.

THE INFORMATION, INCLUDING ESTIMATED QUANTITIES OF WORK, SHOWN ON THESE SHEETS IS BASED ON LIMITED INVESTIGATIONS BY THE STATE AND IS IN NO WAY WARRANTED TO INDICATE THE CONDITIONS OF ACTUAL QUANTITIES OF WORK WHICH WILL BE REQUIRED.

Plotted Date: 1/12/2021

DESIGNER/DRAFTER: ECO
CHECKED BY: ZMK
SCALE AS NOTED

STATE OF CONNECTICUT
DEPARTMENT OF TRANSPORTATION

Filename: ...\0042-0325 Diaphragm Details.dgn

SIGNATURE/BLOCK: OFFICE OF ENGINEERING
APPROVED BY: Andrew J Cardulli

PROJECT TITLE: REHABILITATION OF BRIDGE NO. 05844A CARRYING I-84 OVER ROUTE 15

TOWN: EAST HARTFORD

DRAWING TITLE: DIAPHRAGM DETAILS

PROJECT NO. 0042-0325
DRAWING NO. S-27
SHEET NO. 04.27