BARNSTABLE
IYANNOUGH RD (RTE 28) AND YARMOUTH RD

STATE	FED. AID PROJ. NO.	SHEET NO.	TOTAL SHEETS
MA	TAP/HSI/CMQ/STP/INFP(NI)-0035(043)	151	231
PROJECT FILE NO.	606272		

TEMPORARY TRAFFIC SIGNAL PLANS
STAGE 3B

606272_TR(TEMP TRAFFIC SIGNAL).DWG Plotted on 9-Apr-2021 3:10 PM

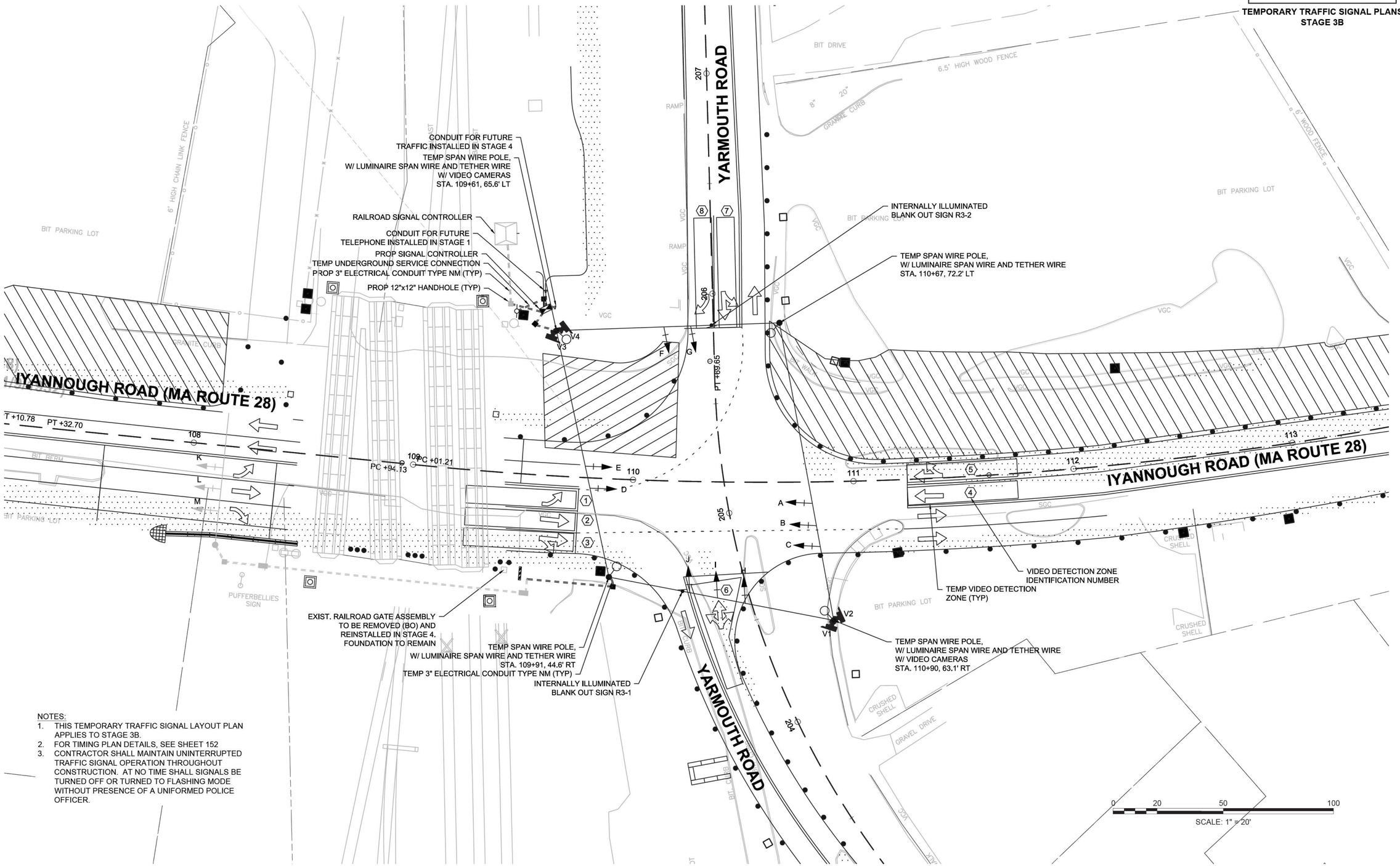

NOTES:
1. THIS TEMPORARY TRAFFIC SIGNAL LAYOUT PLAN APPLIES TO STAGE 3B.
2. FOR TIMING PLAN DETAILS, SEE SHEET 152
3. CONTRACTOR SHALL MAINTAIN UNINTERRUPTED TRAFFIC SIGNAL OPERATION THROUGHOUT CONSTRUCTION. AT NO TIME SHALL SIGNALS BE TURNED OFF OR TURNED TO FLASHING MODE WITHOUT PRESENCE OF A UNIFORMED POLICE OFFICER.

BARNSTABLE
IYANNOUGH RD (RTE 28) AND YARMOUTH RD

STATE	FED. AID PROJ. NO.	SHEET NO.	TOTAL SHEETS
MA	TAP/HSI/CMQ/STP/INFP(NI)-0035(043)	152	231
PROJECT FILE NO. 606272			

TEMPORARY TRAFFIC SIGNAL PLANS
TIMING PLAN - STAGES 1, 2, AND 3

606272_TR(TEMP TRAFFIC SIGNAL).DWG Plotted on 9-Apr-2021 3:30 PM

PHASE 2	PHASE 4	PHASE 5	PHASE 6	PHASE 8	CLEAR TO RR PRE-EMPT	RR PRE-EMPT
						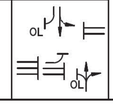

SEQUENCE AND TIMING FOR FULL ACTUATED CONTROL (ISOLATED)

STREET	DIRECTION	HOUSINGS	1	2	3	4	5	6	7	8	9	10	11	12	13	14	15	19	20	21	22	23	24	25	FLASH OPER.
ROUTE 28 (IYANNOUGH ROAD)	SB	A	RL	RL	RL	RL	RL	RL	GL	YL	RL	RL	RL	RL	RL	RL	RL	GL	GL	YL	RL	RL	RL	RL	FRL
ROUTE 28 (IYANNOUGH ROAD)	SB	B,C	G	Y	R	R	R	R	R	R	R	R	R	R	R	R	R	G	G	Y	R	R	R	R	FY
ROUTE 28 (IYANNOUGH ROAD)	SB	K,L,M	G	Y	R	R	R	R	G	Y	R	R	R	R	R	R	R	Y	R	R	R	R	R	R	FR
ROUTE 28 (IYANNOUGH ROAD)	NB	D	R	R	R	R	R	R	R	R	R	GA	Y	R	R	R	R	R	R	R	R	R	R	R	FY
ROUTE 28 (IYANNOUGH ROAD)	NB	E	R	R	R	R	R	R	R	R	R	G	Y	R	R	R	R	R	R	R	R	R	R	R	FY
YARMOUTH ROAD	EB	F,G	R	R	R	G	Y	R	R	R	R	R	R	R	R	R	R	R	R	R	R	G	Y	R	FR
YARMOUTH ROAD	WB	H,I	R	R	R	R	R	R	R	R	R	R	R	R	G	Y	R	R	R	R	R	G	Y	R	FR
YARMOUTH ROAD	WB	J	RR	RR	RR	RR	RR	RR	GR	YR	RR①	RR	RR	RR	FYR	YR②	RR②	RR	RR	RR	RR	RR	RR	RR	FR
YARMOUTH ROAD	EB	R3-2	OUT	OUT	OUT	OUT	OUT	OUT	OUT	OUT	OUT	OUT	OUT	OUT	OUT	OUT	OUT	ON	ON	ON	ON	ON	ON	ON	OUT
YARMOUTH ROAD	WB	R3-1	OUT	OUT	OUT	OUT	OUT	OUT	OUT	OUT	OUT	OUT	OUT	OUT	OUT	OUT	OUT	ON	ON	ON	ON	ON	ON	ON	OUT
TIMING IN SECONDS																									
MINIMUM GREEN (INITIAL)			10			10			6			6			6				33			HOLD*			EMERGENCY ONLY
PASSAGE TIME (VEHICLE)			2			2			2			2			2										
MAXIMUM 1 (FREE OPERATION)			45			25			22			20			22										
YELLOW CLEARANCE				4			4			4			4			4		4		4			4		
RED CLEARANCE					3			3			3			2			3				2.5			2.5	
WALK (W)																									
PEDESTRIAN CLEARANCE																									
RECALL			SOFT			OFF			OFF			SOFT			OFF			OFF				OFF			
MEMORY			NON-LOCK			NON-LOCK			NON-LOCK			NON-LOCK			–			–				–			

* OVERLAP

① TO DISPLAY FYR IF PHASE 8 IS NEXT ② TO REMAIN FYR IF PHASE 5 IS NEXT

	MAJOR ITEMS REQUIRED	
PAY ITEM	QUANTITY	ITEM
816.81	1	CONTROLLER TYPE 8ϕ, TS2-TYPE 1 CAB., FDN., & CONC. PAD
	1	SERVICE CONNECTION UNDERGROUND
	4	TEMP. WOODEN POLE WITH SPAN WIRE, TETHER WIRE, AND LUMINAIRE
	12	1 WAY, 3 SECTION SIGNAL HOUSING (12" LENS)
	1	1 WAY, 4 SECTION SIGNAL HOUSING (12" LENS)
	4	VIDEO DETECTION CAMERA AND ASSEMBLY
	4	VIDEO DETECTION CARD
	4	EMERGENCY PRE-EMPTION DETECTOR (SINGLE CHANNEL)
	1	EMERGENCY PRE-EMPTION PHASE SELECTOR (FOUR CHANNEL)
	1	CONFIRMATION STROBE (WHITE)
824.62	2	INTERNALLY ILLUMINATED BLANK OUT SIGN
		Provide all necessary duct, cable, labor, miscellaneous
		material and equipment to complete the installation.
		per MassDOT Standards and latest Specifications.

RAILROAD PRE-EMPTION OPERATION:

1. HOLD TIME VARIABLE DEPENDING ON LENGTH AND SPEED OF TRAIN.
2. UPON ACTUATION OF THE RAILROAD PRE-EMPTION, THE ACTIVE PHASE SHALL TERMINATE IMMEDIATELY IN ACCORDANCE WITH THE CLEARANCE INTERVALS. THOSE HEADS THAT ARE TO BE GREEN DURING THE RAILROAD PRE-EMPTION CLEARANCE PHASE, IF ALREADY GREEN, SHALL REMAIN GREEN. R3-1 AND R3-2 BLANK OUT SIGNS ARE ACTIVATED ONCE THEIR ASSOCIATED PHASE IS RED.
3. IF PRE-EMPTION OCCURS DURING PHASES 2 OR 5, ADVANCE TO INTERVAL 19. IF PRE-EMPTION OCCURS DURING PHASES, 4, 6, OR 8, ADVANCE TO INTERVAL 20
4. IF PRE-EMPTION OCCURS DURING PHASE 3, PHASE 3 SHALL TERMINATE IMMEDIATELY IN ACCORDANCE WITH PEDESTRIAN CLEARANCE INTERVALS AND ADVANCE TO INTERVAL 20 ONCE THE PEDESTRIAN CLEARANCE HAS TIMED OUT.
5. RAILROAD PRE-EMPTION SHALL HAVE PRIORITY OVER EMERGENCY VEHICLE PRE-EMPTION.
6. THE RAILROAD FLASHING BEACONS SHALL BE ACTIVATED IMMEDIATELY UPON RECEIPT OF TRAIN ACTUATION.
7. DURING PRE-EMPTION, LIMITED SERVICE FOR EASTBOUND AND WESTBOUND MOVEMENTS ON YARMOUTH ROAD. ALL OTHER VEHICULAR SIGNALS DISPLAY SOLID RED. PEDESTRIAN SIGNALS SHOW SOLID "DON'T WALK". R3-1 AND R3-2 BLANK OUT SIGNS ARE DISPLAYED.
8. TRAIN LEAVES TRACK CIRCUIT. LIMITED SERVICE YARMOUTH ROAD VEHICULAR SIGNALS SHOWING GREEN GO TO YELLOW CLEARANCE. ALL OTHER VEHICULAR SIGNALS DISPLAY SOLID RED. PEDESTRIAN SIGNALS SHOW SOLID "DON'T WALK". R3-1 AND R3-2 BLANK OUT SIGNS ARE DISPLAYED.
9. UPON TERMINATION OF THE RAILROAD PRE-EMPTION PHASE, THE CONTROLLER SHALL RESUME OPERATION IN PHASE 5. R3-1 AND R3-2 BLANK OUT SIGNS ARE EXTINGUISHED.
10. A MINIMUM OF 60 SECONDS SHALL BE PROVIDED FROM WHEN THE RAILROAD CIRCUIT ACTIVATES THE WARNING DEVICES TO WHEN THE GATE ARMS BEGIN TO LOWER.

PREFERENTIAL PHASING SEQUENCE

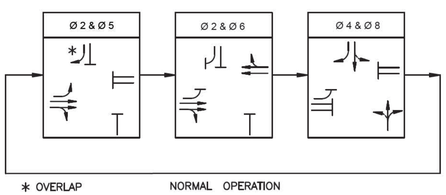

* OVERLAP NORMAL OPERATION

VIDEO DETECTOR DATA

DETECTOR NUMBER	CAMERA NUMBER	CHANNEL NUMBER	ZONE SIZE	Ø CALLED	Ø EXT.	MODE A=PULSE B=PRES.	DELAY TIME	EXT. TIME
1	V1	1	8' X 50'	Ø 5	Ø 5	B	-	-
2	V1	2	8' X 50'	Ø 2	Ø 2	B	-	-
3	V1	2	8' X 50'	Ø 2	Ø 2	B	-	-
4	V3	3	8' X 50'	Ø 6	Ø 6	B	-	-
5	V3	3	8' X 50'	Ø 6	Ø 6	B	-	-
6	V4	4	16' X 50'	Ø 8	Ø 8	B	-	-
7	V2	5	8' X 50'	Ø 4	Ø 4	B	-	-
8	V2	6	8' X 50'	Ø 4	Ø 4	B	-	-

SIGNAL IDENTIFICATION

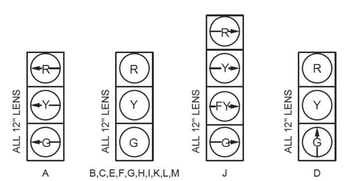

NOTES:

1. ALL SIGNALS SHALL HAVE TUNNEL VISORS.
2. ALL SIGNALS SHALL BE EQUIPPED WITH 12" LED MODULES AND 5" LOUVERED BACKPLATES.
3. ALL BACKPLATES SHALL HAVE A 3" RETROREFLECTIVE BORDER.

BARNSTABLE
IYANNOUGH RD (RTE 28) AND YARMOUTH RD

STATE	FED. AID PROJ. NO.	SHEET NO.	TOTAL SHEETS
MA	TAP/HSI/CMQ/STP/INFP(NI)-0035(043)	153	231
PROJECT FILE NO.	606272		

TEMPORARY TRAFFIC SIGNAL PLANS
SUMMER 2023

606272_TR(TEMP TRAFFIC SIGNAL).DWG Plotted on 9-Apr-2021 3:10 PM

CONDUIT FOR FUTURE TRAFFIC INSTALLED IN STAGE 4
TEMP SPAN WIRE POLE, W/ LUMINAIRE SPAN WIRE AND TETHER WIRE W/ VIDEO CAMERAS STA. 109+61, 65.6' LT
RAILROAD SIGNAL CONTROLLER
CONDUIT FOR FUTURE TELEPHONE INSTALLED IN STAGE 1
PROP SIGNAL CONTROLLER
TEMP UNDERGROUND SERVICE CONNECTION
PROP 3" ELECTRICAL CONDUIT TYPE NM (TYP)
PROP 12"x12" HANDHOLE (TYP)
INTERNALLY ILLUMINATED BLANK OUT SIGN R3-2
TEMP SPAN WIRE POLE, W/ LUMINAIRE SPAN WIRE AND TETHER WIRE STA. 110+67, 72.2' LT
VIDEO DETECTION ZONE IDENTIFICATION NUMBER
TEMP VIDEO DETECTION ZONE (TYP)
TEMP SPAN WIRE POLE, W/ LUMINAIRE SPAN WIRE AND TETHER WIRE W/ VIDEO CAMERAS STA. 110+90, 63.1' RT
EXIST. RAILROAD GATE ASSEMBLY TO BE REMOVED (BO) AND REINSTALLED IN STAGE 4. FOUNDATION TO REMAIN
TEMP SPAN WIRE POLE, W/ LUMINAIRE SPAN WIRE AND TETHER WIRE STA. 109+91, 44.6' RT
TEMP 3" ELECTRICAL CONDUIT TYPE NM (TYP)
INTERNALLY ILLUMINATED BLANK OUT SIGN R3-1

IYANNOUGH ROAD (MA ROUTE 28)
YARMOUTH ROAD
BIT PARKING LOT
BIT DRIVE
BIT WALK
BIT CURB
GRANITE CURB
6' HIGH CHAIN LINK FENCE
6.5' HIGH WOOD FENCE
6' WOOD FENCE
VGC
SGC
RAMP
CRUSHED SHELL
GRAVEL DRIVE
BIT BERM
PUFFERBELLIES SIGN
PT +10.78
PT +32.70
PC +94.13
PC +01.21
PT +69.65

NOTES:
1. THIS TEMPORARY TRAFFIC SIGNAL LAYOUT PLAN APPLIES TO STAGE SUMMER 2023.
2. FOR TIMING PLAN DETAILS, SEE SHEET 154
3. CONTRACTOR SHALL MAINTAIN UNINTERRUPTED TRAFFIC SIGNAL OPERATION THROUGHOUT CONSTRUCTION. AT NO TIME SHALL SIGNALS BE TURNED OFF OR TURNED TO FLASHING MODE WITHOUT PRESENCE OF A UNIFORMED POLICE OFFICER.
4. RELOCATE CONFLICTING UTILITY POLES AND OVERHEAD WIRES PRIOR TO INSTALLATION OF TEMPORARY TRAFFIC SIGNALS.

0 20 50 100
SCALE: 1" = 20'

BARNSTABLE
IYANNOUGH RD (RTE 28) AND YARMOUTH RD

STATE	FED. AID PROJ. NO.	SHEET NO.	TOTAL SHEETS
MA	TAP/HSI/CMQ/STP/INFP(NI)-0035(043)	154	231
PROJECT FILE NO.	606272		

TEMPORARY TRAFFIC SIGNAL PLANS
TIMING PLAN - SUMMER

606272_TR(TEMP TRAFFIC SIGNAL).DWG Plotted on 9-Apr-2021 3:30 PM

PHASE 2	PHASE 4	PHASE 5	PHASE 6	PHASE 8	CLEAR TO RR PRE-EMPT	RR PRE-EMPT
					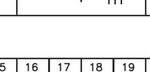	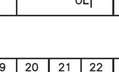

SEQUENCE AND TIMING FOR FULL ACTUATED CONTROL (ISOLATED)

STREET	DIRECTION	HOUSINGS	1	2	3	4	5	6	7	8	9	10	11	12	13	14	15	16	17	18	19	20	21	22	FLASH OPER.
ROUTE 28 (IYANNOUGH ROAD)	SB	A,N	RL	RL	RL	RL	RL	RL	GL	YL	RL	RL	RL	RL	RL	RL	RL	GL	GL	YL	RL	RL	RL	RL	FRL
ROUTE 28 (IYANNOUGH ROAD)	SB	B,C	G	Y	R	R	R	R	R	R	R	R	R	R	R	R	R	G	G	Y	R	R	R	R	FY
ROUTE 28 (IYANNOUGH ROAD)	SB	K,L,M,Q	G	Y	R	R	R	R	G	Y	R	R	R	R	R	R	R	Y	R	R	R	R	R	R	FR
ROUTE 28 (IYANNOUGH ROAD)	NB	D	R	R	R	R	R	R	R	R	R	GA	Y	R	R	R	R	R	R	R	R	R	R	R	FY
ROUTE 28 (IYANNOUGH ROAD)	NB	E	R	R	R	R	R	R	R	R	R	G	Y	R	R	R	R	R	R	R	R	R	R	R	FY
YARMOUTH ROAD	EB	O	RL	RL	RL	FYL	YL	RL	RL	RL	RL	RL	RL	RL	RL	RL	RL	RL	RL	RL	RL	RL	RL	RL	FRL
YARMOUTH ROAD	EB	F,G	R	R	R	G	Y	R	R	R	R	R	R	R	R	R	R	R	R	R	R	G	Y	R	FR
YARMOUTH ROAD	WB	P	RL	RL	RL	RL	RL	RL	RL	RL	RL	RL	RL	RL	FYL	YL	RL	RL	RL	RL	RL	FYL	YL	RL	FRL
YARMOUTH ROAD	WB	H,I	R	R	R	R	R	R	R	R	R	R	R	R	G	Y	R	R	R	R	R	G	Y	R	FR
YARMOUTH ROAD	WB	J	RR	RR	RR	RR	RR	RR	GR	YR	RR[1]	RR	RR	RR	FYR	YR[2]	RR[3]	RR	RR	RR	RR	RR	RR	RR	FR
YARMOUTH ROAD	EB	R3-2	OUT	OUT	OUT	OUT	OUT	OUT	OUT	OUT	OUT	OUT	OUT	OUT	OUT	OUT	OUT	ON	ON	ON	ON	ON	ON	ON	OUT
YARMOUTH ROAD	WB	R3-1	OUT	OUT	OUT	OUT	OUT	OUT	OUT	OUT	OUT	OUT	OUT	OUT	OUT	OUT	OUT	ON	ON	ON	ON	ON	ON	ON	OUT
TIMING IN SECONDS																									
MINIMUM GREEN (INITIAL)			10			10			6			6			6										EMERGENCY ONLY
PASSAGE TIME (VEHICLE)			2			2			2			2			2										
MAXIMUM 1			45			25			22			20			22				33			HOLD*			
MAXIMUM 2																									
YELLOW CLEARANCE				4			4			4			4			4		4		4			4		
RED CLEARANCE					3			3			3			2			3				2.5			2.5	
WALK (W)																									
PEDESTRIAN CLEARANCE																									
RECALL			SOFT			OFF			OFF			SOFT			OFF			OFF				OFF			
MEMORY			NON-LOCK			NON-LOCK			NON-LOCK			NON-LOCK			-			-				-			

* OVERLAP
[1] TO DISPLAY FYR IF PHASE 8 IS NEXT
[2] TO REMAIN FYR IF PHASE 5 IS NEXT
[3] SEE RAILROAD PRE-EMPTION OPERATION NOTE 1

TRAFFIC SIGNAL NOTES:

1. IF THE ASSIGNED RIGHT OF WAY FOR ANY TRAFFIC MOVEMENT IS TO REMAIN IN EFFECT DURING THE NEXT CALLED PHASE, THE SIGNAL INDICATIONS FOR THAT TRAFFIC MOVEMENTS WILL NOT CHANGE DURING THE CLEARANCE INTERVAL.
2. IF THE ASSIGNED RIGHT OF WAY FOR ANY TRAFFIC MOVEMENT IS TO CHANGE DURING THE NEXT CALLED PHASE, THE SIGNAL INDICATIONS FOR THAT TRAFFIC MOVEMENT WILL DISPLAY THE APPROPRIATE CLEARANCE INTERVALS.
3. THE SIGNAL SHALL PROVIDE STOP AND GO OPERATION 24 HOURS A DAY. FLASHING OPERATION SHALL BE FOR EMERGENCY ONLY.

RAILROAD PRE-EMPTION OPERATION:

1. HOLD TIME VARIABLE DEPENDING ON LENGTH AND SPEED OF TRAIN.
2. UPON ACTUATION OF THE RAILROAD PRE-EMPTION, THE ACTIVE PHASE SHALL TERMINATE IMMEDIATELY IN ACCORDANCE WITH THE CLEARANCE INTERVALS. THOSE HEADS THAT ARE TO BE GREEN DURING THE RAILROAD PRE-EMPTION CLEARANCE PHASE, IF ALREADY GREEN, SHALL REMAIN GREEN. R3-1 AND R3-2 BLANK OUT SIGNS ARE ACTIVATED ONCE THEIR ASSOCIATED PHASE IS RED.
3. IF PRE-EMPTION OCCURS DURING PHASES 2 OR 5, ADVANCE TO INTERVAL 19. IF PRE-EMPTION OCCURS DURING PHASES, 4, 6, OR 8, ADVANCE TO INTERVAL 20
4. IF PRE-EMPTION OCCURS DURING PHASE 3, PHASE 3 SHALL TERMINATE IMMEDIATELY IN ACCORDANCE WITH PEDESTRIAN CLEARANCE INTERVALS AND ADVANCE TO INTERVAL 20 ONCE THE PEDESTRIAN CLEARANCE HAS TIMED OUT.
5. RAILROAD PRE-EMPTION SHALL HAVE PRIORITY OVER EMERGENCY VEHICLE PRE-EMPTION.
6. THE RAILROAD FLASHING BEACONS SHALL BE ACTIVATED IMMEDIATELY UPON RECEIPT OF TRAIN ACTUATION.
7. DURING PRE-EMPTION, LIMITED SERVICE FOR EASTBOUND AND WESTBOUND MOVEMENTS ON YARMOUTH ROAD. ALL OTHER VEHICULAR SIGNALS DISPLAY SOLID RED. PEDESTRIAN SIGNALS SHOW SOLID "DON'T WALK". R3-1 AND R3-2 BLANK OUT SIGNS ARE DISPLAYED.
8. TRAIN LEAVES TRACK CIRCUIT. LIMITED SERVICE YARMOUTH ROAD VEHICULAR SIGNALS SHOWING GREEN GO TO YELLOW CLEARANCE. ALL OTHER VEHICULAR SIGNALS DISPLAY SOLID RED. PEDESTRIAN SIGNALS SHOW SOLID "DON'T WALK". R3-1 AND R3-2 BLANK OUT SIGNS ARE DISPLAYED.
9. UPON TERMINATION OF THE RAILROAD PRE-EMPTION PHASE, THE CONTROLLER SHALL RESUME OPERATION IN PHASE 5. R3-1 AND R3-2 BLANK OUT SIGNS ARE EXTINGUISHED.
10. A MINIMUM OF 60 SECONDS SHALL BE PROVIDED FROM WHEN THE RAILROAD CIRCUIT ACTIVATES THE WARNING DEVICES TO WHEN THE GATE ARMS BEGIN TO LOWER.

	MAJOR ITEMS REQUIRED	
PAY ITEM	QUANTITY	ITEM
816.81	1	CONTROLLER TYPE 8ϕ, TS2-TYPE 1 CAB., FDN., & CONC. PAD
	1	SERVICE CONNECTION UNDERGROUND
	4	TEMP. WOODEN POLE WITH SPAN WIRE, TETHER WIRE, AND LUMINAIRE
	18	1 WAY, 3 SECTION SIGNAL HOUSING (12" LENS)
	1	1 WAY, 4 SECTION SIGNAL HOUSING (12" LENS)
	4	VIDEO DETECTION CAMERA AND ASSEMBLY
	4	VIDEO DETECTION CARD
	4	EMERGENCY PRE-EMPTION DETECTOR (SINGLE CHANNEL)
	1	EMERGENCY PRE-EMPTION PHASE SELECTOR (FOUR CHANNEL)
	1	CONFIRMATION STROBE (WHITE)
824.62	2	INTERNALLY ILLUMINATED BLANK OUT SIGN
		Provide all necessary duct, cable, labor, miscellaneous
		material and equipment to complete the installation.
		per MassDOT Standards and latest Specifications.

PREFERENTIAL PHASING SEQUENCE

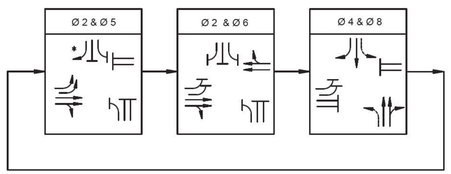

NORMAL OPERATION
(PHASES NOT CALLED MAY BE SKIPPED)

VIDEO DETECTOR DATA

DETECTOR NUMBER	CAMERA NUMBER	CHANNEL NUMBER	ZONE SIZE	Ø CALLED	Ø EXT.	MODE A=PULSE B=PRES.	DELAY TIME	EXT. TIME
1	V1	1	8' X 50'	Ø 5	Ø 5	B	-	-
2	V1	1	8' X 50'	Ø 5	Ø 5	B	-	-
3	V1	2	8' X 50'	Ø 2	Ø 2	B	-	-
4	V1	2	8' X 50'	Ø 2	Ø 2	B	-	-
5	V3	3	8' X 50'	Ø 6	Ø 6	B	-	-
6	V3	3	8' X 50'	Ø 6	Ø 6	B	-	-
7	V4	4	8' X 50'	Ø 4	Ø 4	B	-	-
8	V4	4	8' X 50'	Ø 4	Ø 4	B	-	-
9	V4	4	8' X 50'	Ø 4	Ø 4	B	-	-
10	V2	5	8' X 50'	Ø 8	Ø 8	B	-	-
11	V2	5	8' X 50'	Ø 8	Ø 8	B	-	-
12	V2	6	8' X 50'	Ø 8	Ø 8	B	-	-

SIGNAL IDENTIFICATION

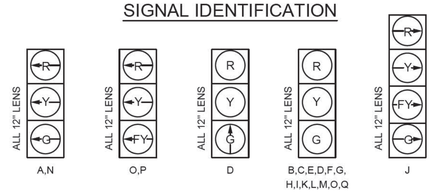

NOTES:

1. ALL SIGNALS SHALL HAVE TUNNEL VISORS.
2. ALL SIGNALS SHALL BE EQUIPPED WITH 12" LED MODULES AND 5" LOUVERED BACKPLATES.
3. ALL BACKPLATES SHALL HAVE A 3" RETROREFLECTIVE BORDER.

BARNSTABLE
IYANNOUGH RD (RTE 28) AND YARMOUTH RD

STATE	FED. AID PROJ. NO.	SHEET NO.	TOTAL SHEETS
MA	TAP/HSI/CMQ/STP/INFP(NI)-0035(043)	155	231
PROJECT FILE NO.	606272		

SUBSURFACE UTILITY ENGINEERING
SHEET 1 OF 1

606272_SUE(TP).DWG Plotted on 21-May-2013 9:50 AM

QUALITY LEVEL A VACUUM EXCAVATION
TP-1

NORTHING	2703773.2'
EASTING	990097.8'
GROUND EL.	33.6'
MEASURE DOWN TOP	-5.1'
MEASURE DOWN BOT.	UNAVAILABLE
TOP UTILITY EL.	28.5'
BOT. UTILITY EL.	UNAVAILABLE

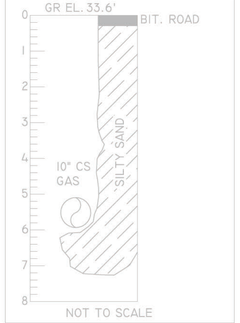

NOT TO SCALE

QUALITY LEVEL A VACUUM EXCAVATION
TP-2

NORTHING	2703780.9'
EASTING	990127.2'
GROUND EL.	34.1'
MEASURE DOWN TOP	-2.1'
MEASURE DOWN BOT.	UNAVAILABLE
TOP UTILITY EL.	32.0'
BOT. UTILITY EL.	UNAVAILABLE

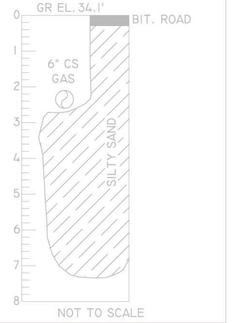

NOT TO SCALE

QUALITY LEVEL A VACUUM EXCAVATION
TP-3

NORTHING	2703273.4'
EASTING	990499.0'
GROUND EL.	33.6'
MEASURE DOWN TOP	-2.1'
MEASURE DOWN BOT.	UNAVAILABLE
TOP UTILITY EL.	31.5'
BOT. UTILITY EL.	UNAVAILABLE



NOT TO SCALE

QUALITY LEVEL A VACUUM EXCAVATION
TP-4

NORTHING	2703275.0'
EASTING	990498.1'
GROUND EL.	33.5'
MEASURE DOWN TOP	-4.0'
MEASURE DOWN BOT.	UNAVAILABLE
TOP UTILITY EL.	29.5'
BOT. UTILITY EL.	UNAVAILABLE

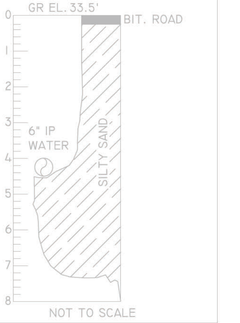

NOT TO SCALE

QUALITY LEVEL A VACUUM EXCAVATION
TP-5

NORTHING	2703502.1'
EASTING	990610.5'
GROUND EL.	34.3'
MEASURE DOWN TOP	-4.5'
MEASURE DOWN BOT.	UNAVAILABLE
TOP UTILITY EL.	29.8'
BOT. UTILITY EL.	UNAVAILABLE

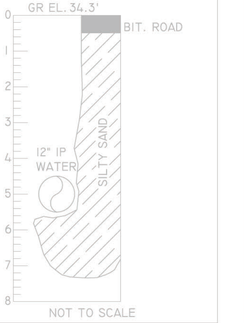

NOT TO SCALE

QUALITY LEVEL A VACUUM EXCAVATION
TP-6

NORTHING	2703511.5'
EASTING	990595.0'
GROUND EL.	34.7'
MEASURE DOWN TOP	-6.5'
MEASURE DOWN BOT.	UNAVAILABLE
TOP UTILITY EL.	28.2'
BOT. UTILITY EL.	UNAVAILABLE

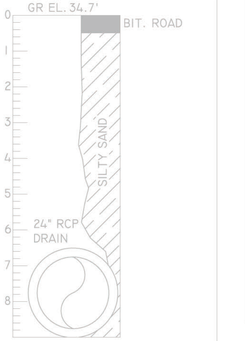

NOT TO SCALE

QUALITY LEVEL A VACUUM EXCAVATION
TP-7

NORTHING	2703547.2'
EASTING	990616.0'
GROUND EL.	35.1'
MEASURE DOWN TOP	-4.2'
MEASURE DOWN BOT.	UNAVAILABLE
TOP UTILITY EL.	30.9'
BOT. UTILITY EL.	UNAVAILABLE

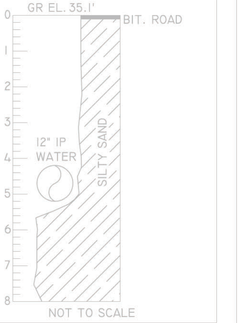

NOT TO SCALE

QUALITY LEVEL A VACUUM EXCAVATION
TP-8

NORTHING	2703835.2'
EASTING	990144.4'
GROUND EL.	34.7'
MEASURE DOWN TOP	-5.6'
MEASURE DOWN BOT.	UNAVAILABLE
TOP UTILITY EL.	29.1'
BOT. UTILITY EL.	UNAVAILABLE

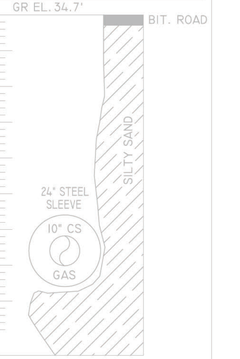

NOT TO SCALE

QUALITY LEVEL A VACUUM EXCAVATION
TP-9

NORTHING	2703859.4'
EASTING	990111.5'
GROUND EL.	34.7'
MEASURE DOWN TOP	-3.4'
MEASURE DOWN BOT.	UNAVAILABLE
TOP UTILITY EL.	31.3'
BOT. UTILITY EL.	UNAVAILABLE

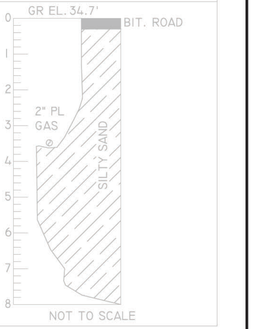

NOT TO SCALE

QUALITY LEVEL A VACUUM EXCAVATION
TP-10

NORTHING	2703856.7'
EASTING	990115.9'
GROUND EL.	34.7'
MEASURE DOWN TOP	-4.1'
MEASURE DOWN BOT.	UNAVAILABLE
TOP UTILITY EL.	30.6'
BOT. UTILITY EL.	UNAVAILABLE

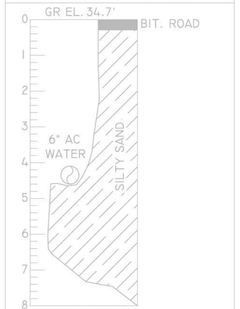

NOT TO SCALE

QUALITY LEVEL A VACUUM EXCAVATION
TP-11

NORTHING	2704142.0'
EASTING	990986.2'
GROUND EL.	28.6'
MEASURE DOWN TOP	-4.5'
MEASURE DOWN BOT.	UNAVAILABLE
TOP UTILITY EL.	24.1'
BOT. UTILITY EL.	UNAVAILABLE

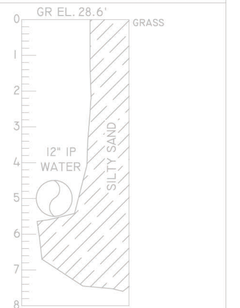

NOT TO SCALE

QUALITY LEVEL A VACUUM EXCAVATION
TP-12

NORTHING	2704168.8'
EASTING	990949.9'
GROUND EL.	29.5'
MEASURE DOWN TOP	-3.5'
MEASURE DOWN BOT.	UNAVAILABLE
TOP UTILITY EL.	26.0'
BOT. UTILITY EL.	UNAVAILABLE

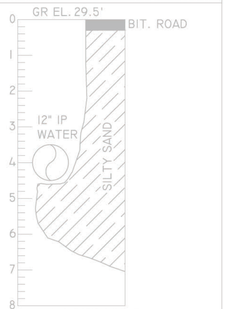

NOT TO SCALE

QUALITY LEVEL A VACUUM EXCAVATION
TP-13

NORTHING	2704111.4'
EASTING	990904.2'
GROUND EL.	30.5'
MEASURE DOWN TOP	-3.7'
MEASURE DOWN BOT.	UNAVAILABLE
TOP UTILITY EL.	26.8'
BOT. UTILITY EL.	UNAVAILABLE

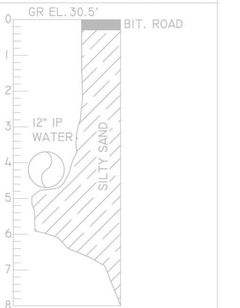

NOT TO SCALE

QUALITY LEVEL A VACUUM EXCAVATION
TP-14

NORTHING	2703644.7'
EASTING	990650.7'
GROUND EL.	35.4'
MEASURE DOWN TOP	-3.9'
MEASURE DOWN BOT.	UNAVAILABLE
TOP UTILITY EL.	31.5'
BOT. UTILITY EL.	UNAVAILABLE

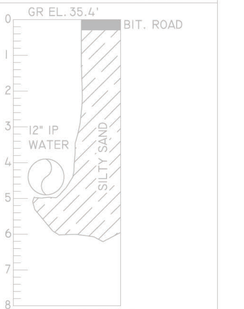

NOT TO SCALE

QUALITY LEVEL A VACUUM EXCAVATION
TP-15

NORTHING	2703523.3'
EASTING	990601.4'
GROUND EL.	34.6'
MEASURE DOWN TOP	-9.8'
MEASURE DOWN BOT.	UNAVAILABLE
TOP UTILITY EL.	24.8'
BOT. UTILITY EL.	UNAVAILABLE

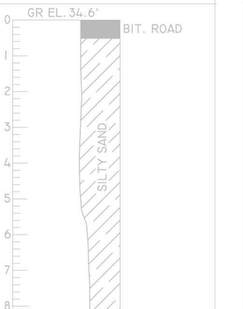

NOT TO SCALE

QUALITY LEVEL A VACUUM EXCAVATION
TP-16

NORTHING	2703783.9'
EASTING	990076.1'
GROUND EL.	34.6'
MEASURE DOWN TOP	-4.0'
MEASURE DOWN BOT.	UNAVAILABLE
TOP UTILITY EL.	30.6'
BOT. UTILITY EL.	UNAVAILABLE

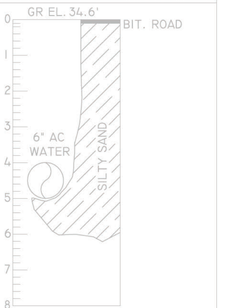

NOT TO SCALE

QUALITY LEVEL A VACUUM EXCAVATION
TP-17

NORTHING	2703635.6'
EASTING	990665.3'
GROUND EL.	35.7'
MEASURE DOWN TOP	-10.0'(APPROX)
MEASURE DOWN BOT.	UNAVAILABLE
TOP UTILITY EL.	25.7'(APPROX)
BOT. UTILITY EL.	UNAVAILABLE

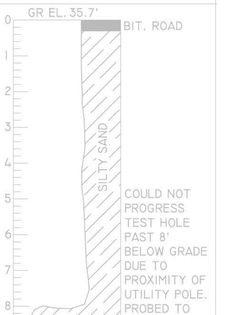

NOT TO SCALE

BARNSTABLE
IYANNOUGH RD (RTE 28) AND YARMOUTH RD

STATE	FED. AID PROJ. NO.	SHEET NO.	TOTAL SHEETS
MA	TAP/HSI/CMQ/STP/INFP(NI)-0035(043)	156	231
PROJECT FILE NO. 606272			

UTILITY PLANS
SHEET 1 OF 11

606272_UT(UTILITY PLANS).DWG Plotted on 3-Jun-2021 3:21 PM

N

NAD 83

BEGIN PROJECT STA. 101+20.10 (RTE 28) N 2704032.7292 E 989812.7260

PROP 1P SERVICE CONNECTION: PROP 1 - 2" CATV PVC, 1 - 2" TEL PVC, 1 - 3" ELEC PVC. TEL AND CATV TO RUN ABOVE ELEC. CONNECT EXIST METER TO HH (ITEM 826.71 ALSO INCLUDES HH) (SEE NOTE 5 ON SHEET 156).

PROP TWO (2) 1P SERVICE CONNECTIONS: 1 - 2" CATV PVC, 1 - 2" TEL PVC, 1 - 3" ELEC PVC. TEL AND CATV TO RUN ABOVE ELEC. CONNECT EXIST METER TO HH (ITEM 826.71 ALSO INCLUDES HH) (SEE NOTE 5 ON SHEET 156)

PERM. EASEMENT

PROP HH (SEE NOTE 1)

PROP CATV PED (BO)

PROP TEL PED (BO)

RADIUS = 3'

RADIUS = 4'

EXIST. SHLO

REM UP #150/ 17 (BO)

REM UP #150/ 16 (BO)

PROP 2 - 4" CATV, 1 - 4" TEL, 2 - 4" ELEC CONC. ENCASED CONDUITS (TRENCH - A5 ON SHEET 167)

PROP 2 - 4" CATV, 1 - 4" TEL, 2 - 4" ELEC CONC. ENCASED CONDUITS (TRENCH - A5 ON SHEET 167)

TEMP EASEMENT

REM UP #150/ 15 (BO)

PROP CROSSING: PROP TRENCH UNDER EXIST 2" GAS

PROP CROSSING: PROP TRENCH UNDER EXIST 8" WATER

PT +47.81

REM UP #9184/ 50 (BO)

CONNECT TO EXIST 10" G HP GAS MAIN (BO)

REM EXIST OHW (BO)

RECORD LOCATION OF UNDERGROUND ELECTRIC. UNDERGROUND ELECTRIC NOT FOUND DURING SUE INVESTIGATION, AND THEREFORE DETERMINED TO NOT EXIST.

PROP CROSSING: PROP TRENCH A5 UNDER 10" CS G AND PROP 12" RCP DRAIN

REM UP #9184/51 - 150/ 14.5 (BO)

PROP CROSSING: PROP TRENCH A5 UNDER PROP 12" RCP DRAIN

PROP LIGHT HH (TYP)

PROP LIGHT POLE (TYP)

PROP. HL-PUE

PROP. HS-PUE

RET. GG

REM UP #150/ 14 (BO)

TEMP. EASEMENT

REM OHW (BO)

PROP 1P SERVICE CONNECTION: PROP 1 - 2" CATV PVC, 1 - 2" TEL PVC, 1 - 3" ELEC PVC. TEL AND CATV TO RUN ABOVE ELEC. CONNECT EXIST METER TO HH (ITEM 826.71 ALSO INCLUDES HH) (SEE NOTE 5 ON SHEET 156).

PERM. EASE

CONNECT TO EXIST 6" G CS (BO)

IYANNOUGH ROAD (ROUTE 28)

R&R GG (BO)

HL - PUE EASEMENT

PROP 8" PL GAS MAIN (BO)

REM EXIST 6" G CS (BO)

CONNECT 2" PL GAS TO EXIST 2" PL GAS (BO)

PROP 2" PL GAS (BO)

RET 10" G CS

ADJ. GG (BO)

PROP 2 - 4" CATV, 4 - 4" TEL, 9 - 6" ELEC CONC. ENCASED CONDUITS (TRENCH - A8 ON SHEET 168)

R&R GAS SERVICE TO AVOID CB CONFLICT (BO) (CB IS LOW POINT)

REM. GG (BO)

PROP 8" PL GAS MAIN (BO)

R&R GAS WITNESS STAKE (BO)

CONNECT PROP 8" PL GAS MAIN TO EXIST 8" PL GAS MAIN (BO)

CONNECT 2" PL GAS TO PROP 8" PL GAS (BO)

PROP. SHLO

EXIST. SHLO

UTILITY CROSSING: EXIST 10" G CS UNDER 12" RCP

PROP 6'x10' EMH

PROP TMH

PROP CATV HANDHOLE

RADIUS = 30'

PERM. EASEMENT

PROP. SHLO

ADJ. GG (BO)

PERM. EASEMENT

PROP CROSSING: PROP TRENCH - A8 UNDER EXIST GAS SERVICE LINE

PROP THREE (3) 1P SERVICE CONNECTIONS: 1 - 2" CATV PVC, 1 - 2" TEL PVC, 1 - 3" ELEC PVC (CONC. ENCASED). TEL AND CATV TO RUN ABOVE ELEC. CONNECT EXIST METER TO HH (ITEM 826.70 ALSO INCLUDES HH) (SEE NOTE 5 ON SHEET 156)

REM UP #197/ 2; REPLACE WITH 30' UP #197/ 2A WITH 15' DE SW GUY (BO)

REM UP #197/ 3 (BO) LOCATION APPROXIMATE

PROP 2 - 2" CATV PVC, 2 - 2" TEL PVC, 2 - 4" ELEC PVC (CONC. ENCASED) SEE NOTE 5

PROP 1 - 4" CATV PVC, 1 - 4" TEL PVC, 2 - 4" ELEC PVC (CONC. ENCASED) (826.70)

PROP CATV PED (BO)

PROP TEL PED (BO)

ENGINE HOUSE ROAD

PROP HH (SEE NOTE 1)

PROP OHW (BO)

PC +44.67

PT +48.79

PROP 2 - 4" CATV, 2 - 4" TEL, 9 - 6" ELEC CONC. ENCASED CONDUITS (TRENCH - A9 ON SHEET 168)

REM UP #150/ 14S (BO)

REM UP #9184/ 52 - 197/ 1 (BO)

PROP 2 - 4" CATV PVC SWEEPS & 2 - 4" TEL PVE SWEEPS

PROP 30' UP #9184/ 52 - 197/ 1 WITH 2 - 15' DE GUYS (BO)

PROP 9 - 6" ELEC CONC. ENCASED CONDUITS (TRENCH - E1 ON SHEET 169)

EXIST UTILITY EASEMENT

TEMP. EASEMENT

PROP. COUNTY LAYOUT

GLIDE SLOPE SURFACE - RW15-AC5300-ROW12-OEI

TRANSPOR

MARY DUNN

UTILITY NOTES:

1. ALL ELECTRIC HANDHOLES (HH) SHALL BE APPROVED BY EVERSOURCE ENERGY AND SHALL BE POLYMER CONCRETE.
2. LIGHTING CONDUIT IS NOT SHOWN ON THE PLANS FOR CLARITY. SEE LIGHTING PLANS FOR CONDUITS.
3. FOR ALL PROPOSED UTILITY TRENCH CROSSINGS WITH EXISTING UTILITIES INCLUDING WATER, ELECTRIC AND GAS; THE EXISTING UTILITIES SHALL BE FIELD VERIFIED FOR LOCATION AND DEPTH. PROPOSED UTILITIES SHALL BE INSTALLED TO MAINTAIN MINIMUM SEPARATION REQUIREMENTS FROM EXISTING UTILITIES.
4. ALL UTILITY POLE LENGTHS NOTED IN THE UTILITY POLE LABELS ARE FOR THE ACTUAL POLE LENGTH. THE EMBEDMENT DEPTH OF A UTILITY POLE IS 10% OF THE POLE LENGTH PLUS TWO ADDITIONAL FEET. FOR EXAMPLE A UTILITY POLE LABELED AS "40 FT UP" REFERS TO A TOTAL POLE LENGTH OF 40 FEET, INCLUDING AN EMBEDMENT DEPTH OF 6 FT (4 FT (10% OF 40 FT) + 2 FT = 6 FT), RESULTING IN A 34 FOOT HIGH POLE ABOVE THE GROUND.
5. CONTRACTOR TO COORDINATE CABLE AND TELEPHONE SERVICE WITH EACH RESPECTIVE UTILITY COMPANY WHERE AN ELECTRIC SERVICE RISER RELOCATION (ITEM 826.70) AND ELECTRIC SERVICE RELOCATION (ITEM 826.71) IS REQUIRED. CONDUIT FOR CABLE AND TELEPHONE SERVICE WILL BE PAID FOR WITH ITEM 804.2. 2 INCH ELECTRICAL CONDUIT TYPE NM - PLASTIC (UL). ELECTRICAL CONDUIT ASSOCIATED WITH ITEM 827.70 AND ITEM 827.71 IS INCIDENTAL TO ITEM 827.70 AND ITEM 827.71, RESPECTIVELY.
6. SUBSURFACE UTILITY ENGINEERING (SUE) INFORMATION IS ACTUAL FIELD LOCATION AND SUPERSEDES THE RECORD LOCATION OF EACH RESPECTIVE UTILITY.

0 20 50 100

SCALE: 1" = 20'

CONTINUED ON SHEET 165

CONTINUED ON SHEET 157

CONTINUED ON SHEET 164

BARNSTABLE
IYANNOUGH RD (RTE 28) AND YARMOUTH RD

STATE	FED. AID PROJ. NO.	SHEET NO.	TOTAL SHEETS
MA	TAP/HSI/CMQ/STP/INFP(NI)-0035(043)	157	231
PROJECT FILE NO.	606272		

UTILITY PLANS
SHEET 2 OF 11

606272_UT(UTILITY PLANS).DWG Plotted on 3-Jun-2021 12:57 PM

CONTINUED ON SHEET NO. 160

N

NAD 83

REM UP #/ 60 -3 (BO)

#192
1 STORY
COMMERCIAL
SILL=38.46

N/F
ATLANTIS IYANOUGH REALTY LLC
180 IYANNOUGH RD
MAP 328 PARCEL 131
BOOK 25973 PAGE 311

PERM ACCESS EASEMENT

PERM WATER EASEMENT

PROP 1P SERVICE CONNECTION: PROP 1 - 2" CATV PVC, 1 - 2" TEL PVC, 1 - 3" ELEC PVC. TEL AND CATV TO RUN ABOVE ELEC. CONNECT EXIST METER TO HH (ITEM 826.71 ALSO INCLUDES HH) (SEE NOTE 5 ON SHEET 156).

PERM. EASEMENT
RADIUS = 3'

PROP 2 - 4" CATV, 1 - 4" TEL, 2 - 4" ELEC CONC. ENCASED CONDUITS (TRENCH - A5 ON SHEET 167)

TEMP. EASEMENT

BIT PARKING LOT

REM OHW (BO)

PROP HH (SEE NOTE 1)
PROP 1-3" ELEC
PROP TYPE TRANSFORMER (BO) (SEE SHEET 175); PAD BY CONTRACTOR
PROP CATV PED (BO)
PROP TEL PED (BO)
PROP 4-4" ELEC CONC ENCASED CONDUITS

PROP. SHLO

4-4" RM CONDUIT (BO)

PROP 4'X4' EMH (BO)

PROP 5'X5' EMH

LIGHTING LOAD CENTER

PROP 2 - 4" CATV, 1 - 4" TEL, 4 - 4" ELEC CONC. ENCASED CONDUITS (TRENCH - A4 ON SHEET 167)

CONTINUED ON SHEET NO. 156

EXTEND GAS SERVICE CONNECTION (BO)

PROP 8" PL GAS MAIN (BO)

PROP CROSSING: PROP TRENCHES OVER PROP 12" RCP DRAIN

PROP TMH

PROP CATV HANDHOLE

PROP 2-4" CATV CONC ENCASED CONDUITS

PROP CATV CABINET (BO)

PROP 6'x10' EMH

PROP 1 - 4" ELEC CONC. ENCASED CONDUIT

PROP EHH

EXTEND GAS SERVICE CONNECTION (BO)

PROP 2" PVC CATV (TO BUNGALOW)

PROP 2 - 4" CATV, 6 - 4" TEL, 9 - 6" ELEC, 4 - 4" ELEC CONC. ENCASED CONDUITS (TRENCH - A2 ON SHEET 167)

PROP 1 - 3" TEL (TO TRAFFIC SIGNAL CONTROLLER)

PROP 4 - 4" ELEC CONC. ENCASED CONDUITS

PROP RR

BUNGALOW (BO)

PROP ELEC HH AND 3" PVC TO EMH

PROP TYPE 1 TRANSFORMER (SEE SHEET 175)

PROP 5'x5' EMH

PROP 2 - 4" ELEC CONC. ENCASED CONDUITS LIGHTING LOAD CENTERS (2)

PROP 4'X4' EMH (BO)

PROP 1 - 3" ELEC

PROP TRAFFIC SIGNAL CONTROLLER

REM OHW (BO)

REM UP #36/ 18 (BO)

REM OHW (BO)

REM UP #36/ 17.54 (BO)

PROP 4-4" ELEC CONC ENCASED CONDUITS

REM OHW (BO)

PROP 8" PL GAS MAIN (BO)

PROP CROSSING: PROP TRENCHES OVER PROP 12" DRAIN

REM TEL

RADIUS = 4'

RADIUS = 3'

PROP CROSSING: GAS OVER 36" DRAIN

PROP ELEC HH

PROP 2 - 4" CATV, 6 - 4" TEL, 9 - 6" ELEC CONC. ENCASED CONDUITS (TRENCH - A1 ON SHEET 167)

R&R GAS VENT (BO)

EXIST GAS 8" PL (BO)

PROP GAS CONNECTION (BO)

PROP 5'x10' EMH

PROP 4'X4' EMH (BO)

PROP TRENCH E1

PROP 4'X4' EMH (BO)

PROP 4 - 4" TEL / 2 - 4" CATV CONDUITS

PROP CATV HANDHOLE

PROP TMH

PERM. EASEMENT

PROP CONDUITS, GROUT, SPACERS THROUGH EXISTING CASING PIPES (SEE SHEET 170)

PROP 2 - 4" CATV, 6 - 4" TEL, 9 - 6" ELEC CONC. ENCASED CONDUITS (TRENCH - A1 ON SHEET 167)

TEMP. EASEMENT

REM UP #36/ 16 & UP #36/15 (BO)

REM. GAS LINE (BO)

REM. GAS LINE (BO)

REM OHW (BO)

REM OHW (BO)

TEMP. EASEMENT

FENCE BY OTHERS

PROP 6" PL (BO)

PROP. TOWN LO

TEMP. EASEMENT

PROP CROSSING: PROP 8" PL GAS (BO) UNDER TRENCHES

PROP 1 - 4" CATV, 1 - 4" TEL, 4 - 4" ELEC. CONC. ENCASED CONDUITS (TRENCH - A3 ON SHEET 167) CROSS UNDER EXIST WATER (SEE SUE DATA, SHEET 155)

PROP 1P SERVICE CONNECTION: 1 - 2" CATV PVC, 1 - 2" TEL PVC, 1 - 3" ELEC PVC. TEL AND CATV TO RUN ABOVE ELEC. CONNECT EXIST METER TO HH (ITEM 826.71 ALSO INCLUDES HH) (SEE NOTE 5 ON SHEET 156)

N/F
EILA S. DESROCHERS, KATRLK KORPELA, KORPELA REVOCABLE EDUCATION TRUST
114 IYANNOUGH RD
MAP 328 PARCELS 144, 145 & 147
BOOK 3088 PAGE 170

N/F
D&S MACDONALD FAMILY TRUST

PROP HH (SEE NOTE 1)

PROP 5'x5' EMH

PROP BOLLARDS

PERM. EASEMENT

RADIUS = 3' (TYP.)

TYPE 2 TRANSFORMER (SEE SHEET 175)

PROP CATV PED (BO)

PROP TEL PED (BO)

PROP THREE (3) - 3P ELEC SERVICE RELOCATION: 1 - 2" CATV PVC, 1 - 2" TEL PVC, 1 - 4" PVC ELEC PVC. TEL AND CATV TO RUN ABOVE ELEC. CONNECT EXIST METER TO HH (ITEM 826.71 ALSO INCLUDES HH) (SEE NOTE 5 ON SHEET 156).

PROP 1 - 4" CATV, 1 - 4" TEL, CONC. ENCASED CONDUITS

RET. L.P.

RET. L.P.

N/F
HESS RETAIL STORES LLC
MAP 328, LOT 151
BK.28253, PG.164

BIT PARKING LOT

GAS PUMP CANOPY

METAL POSTS

CONC. PAD

REM UP #36/ 17A (BO)

PROP. HS EASEMENT

TEMP. EASEMENT

R&R. L.P. (BO)

LANDSCAPED AREA

PROP 8" PL GAS (BO)

REM OHW (BO)

REM ELECTRIC

ADJ. GG (BO)

SAWCUT

PROP. HS EASEMENT

REM UP #36/ 16A

RET. GG

REM UGND ELECTRIC

REM OHW (BO)

TEMP. EASEMENT

TEMP. EASEMENT

PROP 1P SERVICE CONNECTION: 1 - 2" CATV PVC, 1 - 2" TEL PVC, 1 - 3" ELEC PVC (CONC. ENCASED). TEL AND CATV TO RUN ABOVE ELEC., CONNECT EXIST METER TO HH (ITEM 826.70) (SEE NOTE 5 ON SHEET 156)

PROP. HS EASEMENT

PROP HH (SEE NOTE 1)

N/F
RICHARD G. & MAUREEN J. MAHONEY
MAP 328, LOT 158
BK.27072, PG.337

N/F
153 REALTY TRUST
MAP 328, LOT 157
BK.27640, PG.73

N/F
HOWARD J + LORRAINE FINKEL, TR
H.J.M. REALTY TRUST
MAP 328 PARCEL 231
BOOK 26997 PAGE 331

148 CEDAR STREET

PERM. EASEMENT

#131
1 STORY
WOOD
COMMERCIAL

N/F
CONSTANCE TRACY
131 IYANNOUGH RD
MAP 328 PARCEL 149
BOOK 5661 PAGE 149

#153
2 STORY
COMMERCIAL

#193
1 STORY
COMMERCIAL

N/F
GAS INC &
AMERIGAS PROPANE L.P.
193 IYANNOUGH RD
MAP 328 PARCEL 202
BOOK 1209 PAGE 558

N/F
COMMONWEALTH
MAP 328 PARCEL 156/002
BOOK 3498 PAGE 92

PROP 1 - 4" CATV, 1 - 4" TEL, CONC. ENCASED CONDUITS

REM OHW (BO)

REM UP #150/ 18A (BO) (LOCATION APPROX.)

PROP 1P SERVICE CONNECTION: 1 - 2" CATV PVC, 1 - 2" TEL PVC, 1 - 3" ELEC PVC. TEL AND CATV TO RUN ABOVE ELEC. CONNECT EXIST METER TO HH (ITEM 826.71) (SEE NOTE 5 ON SHEET 156)

PROP TEL PED (BO)

PROP CATV PED (BO)

TEMP. EASEMENT

ADJ. GG (BO)

PERM. EASEMENT

PROP 6'x10' EMH

PROP 4" PVC

PROP HH (SEE NOTE 1)

RADIUS = 4' (TYP.)

PROP TMH

PROP CATV HANDHOLE

RADIUS = 3'

PROP CROSSING: UTILITIES OVER EXIST 8" PL GAS

RET EXIST 8" PL GAS (BO)

EXIST. SHLO

R&R GAS VENT (BO)

108

109

110

111

112

113

204

YARMOUTH ROAD

BIT PARKING LOT

BIT DRIVE

BIT BERM

CONC. PAD

LANDSCAPED AREA

CRUSHED SHELL

DECK

GAS PUMP CANOPY

METAL POSTS

GRANITE CURB

6.5' HIGH WOOD FENCE

6' WOOD FENCE

6' HIGH CHAIN LINK FENCE

8" WOOD RAIL FENCE

10" WOOD RAIL FENCE

8" PVC

10" PVC

8"W AC

6"G CS

UNDERGROUND ELEC.

OHW

WGT

VGC

SGC

SCALE: 1" = 20'

0 20 50 100

CONTINUED ON SHEET NO. 159

BARNSTABLE
IYANNOUGH RD (RTE 28) AND YARMOUTH RD

STATE	FED. AID PROJ. NO.	SHEET NO.	TOTAL SHEETS
MA	TAP/HSI/CMQ/STP/INFP(NI)-0035(043)	158	231
PROJECT FILE NO.	606272		

UTILITY PLANS
SHEET 3 OF 11

606272_UT(UTILITY PLANS).DWG Plotted on 3-Jun-2021 12:59 PM

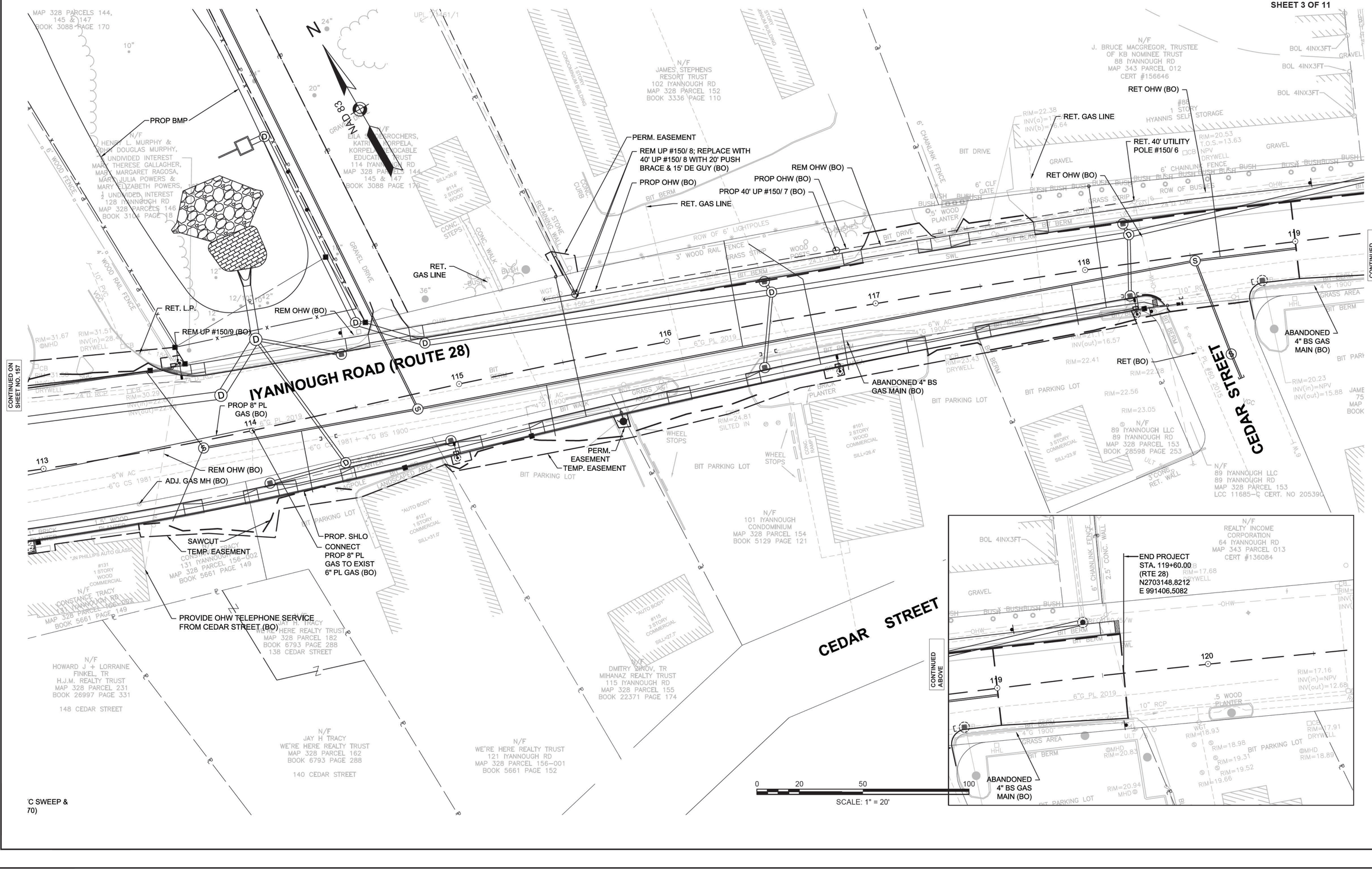

BARNSTABLE
IYANNOUGH RD (RTE 28) AND YARMOUTH RD

STATE	FED. AID PROJ. NO.	SHEET NO.	TOTAL SHEETS
MA	TAP/HSI/CMQ/STP/INFP(NI)-0035(043)	159	231
PROJECT FILE NO. 606272			

UTILITY PLANS
SHEET 4 OF 11

606272_UT(UTILITY PLANS).DWG Plotted on 3-Jun-2021 1:00 PM

CONTINUED ON SHEET NO. 157

N

NAD 83

N/F GAS INC & AMERIGAS PROPANE L.P. 193 IYANNOUGH RD MAP 328 PARCEL 203 BOOK 1209 PAGE

N/F AMERIGAS PROPANE L.P. 193 IYANNOUGH RD MAP 328 PARCEL 203 BOOK 9570 PAGE 09

N/F GAS INC & AMERIGAS PROPANE L.P. MAP 328 PARCEL 202 BOOK 1209 PAGE 558

IYANNOUGH RD

UP #150

UP /2 NO WIRES

RSW / BROKEN

RR TIE

RSW 59A M.P.

N/F COMMONWEALTH OF MASSACHUSETTS BK 3182 PG 263

N/F COMMONWEALTH OF MASSACHUSETTS MAP 328 PARCEL 156/002 BOOK 3498 PAGE 92

FENCE BY OTHERS

PROP 2 - 4" CATV, 6 - 4" TEL, 9 - 6" ELEC CONC. ENCASED CONDUITS (TRENCH - A1 ON SHEET 167)

TEMP. EASEMENT

REM UP #36/ 16 & UP #36/15 (BO)

TEMP. EASEMENT

REM OHW (BO)

TEMP. EASEMENT

PROP 6-6" ELEC CONC ENCASED CONDUITS

PROP SWITCHING ENCLOSURE

PROP 6'X10' EMH

PROP 6-6" ELEC CONC ENCASED CONDUITS

PROP SWITCHING ENCLOSURE

PERM. EASEMENT

PROP CATV HANDHOLE

PROP TMH

REM UP #36/ 14 (BO)

REM OHW (BO)

ADJ. SMH

REM OHW (BO)

PROP 2 - 4" CATV, 4 - 4" TEL, 4 - 6" ELEC, 4 - 4" ELEC CONC. ENCASED CONDUITS (TRENCH - A6 ON SHEET 167)

HANDICAP RAMP

DECK

N/F RAILROAD CROSSING, LLC MAP 328, LOT 238 BK.25150, PG.44

1 STORY RAILROAD CARS No. 165

RR TIES WITH LANDSCAPING

RIM=35.17

INV(OUT)=23.06

INV(OUT)=22.89

RIM=35.24

INV(OUT)=29.24

1.5 STORY WOOD No. 88 SILL=38.32

COVERED PORCH

LANDSCAPING W/RAILROAD TIES

BEGIN PROJECT STA. 300+00.00 (YARMOUTH RD) N 2703158.1708 E 990423.6465

RADIUS = 3'

PROP TEL PED (BO)

PROP CATV PED (BO)

PROP TWO (2) - 3P ELEC SERVICE RELOCATIONS: 1 - 2" CATV PVC, 1 - 2" TEL PVC, 1 - 4" PVC ELEC PVC (SEE NOTE 1) CONNECT EXIST UGND SERVICE TO HH. (ITEM 826.71) (SEE NOTE 5 ON SHEET 156)

RADIUS = 3'

REM UP #36/ 13 (BO)

REM TREE

REM OHW (BO)

REM TREE

YARMOUTH ROAD

END LAYOUT 2/23/1962

CONC. WALK

BIT. WALK

BIT. BERM

PROP 6" PL (BO)

TEMP. EASEMENT

PROP. HS EASEMENT

REM TEL. 4-4"PVC

REM OHW (BO)

REM UP #56/ 14 (BO)

PROP. HS EASEMENT

PROP OHW SERVICE CONNECTION (BO)

ADJ. SMH

PROP 6" PL UNDER UTILITIES (BO)

REM OHW (BO)

REM OHW (BO)

EXIST LO

REM UP #36/ 14S (BO)

ADJ. GG (BO)

GAS CONNECTION (BO)

PROP. HS EASEMENT

REM OHW (BO)

PROP 1 - 4" CATV PVC SWEEP, 1 - 4" TEL PVC SWEEP & 2 - 6" ELEC RGS RISERS & SWEEPS

TEMP. EASEMENT

PROP 45' UP #56/ 13 WITH 15' DE GUY (BO)

RADIUS = 3'

PROP TEL PED (BO)

PROP CATV PED (BO)

PROP TWO (2) - 3P ELEC SERVICE RELOCATIONS: 1 - 2" CATV PVC, 1 - 2" TEL PVC, 1 - 4" PVC ELEC PVC (SEE NOTE 1) CONNECT EXIST UGND SERVICE TO HH. (ITEM 826.71) (SEE NOTE 5 ON SHEET 156)

RADIUS = 3'

PROP OHW (BO)

PERM. EASEMENT

PROP 2 - 4" TEL & 2 - 6" ELEC CONC. ENCASED CONDUITS

PROP 2 - 4" TEL PVC SWEEPS & 2 - 6"ELEC RGS RISERS & SWEEPS

PROP 45' UP #56/ 12 WITH 15' DE GUY (BO)

REM UP #36/ 13S (BO)

153 REALTY TRUST MAP 328, LOT 157 BK.27640, PG.73

N/F RICHARD G. & MAUREEN J. MAHONEY MAP 328, LOT 158 BK.27072, PG.337

N/F HOWARD J + LORRAINE FINKEL, TR H.J.M. REALTY TRUST MAP 328 PARCEL 231 BOOK 26997 PAGE 331

148 CEDAR STREET

2 STORY WOOD No. 128 SILL=35.60

2 STORY WOOD No. 126 FINISH FLOOR=36.00

N/F ALJ REALTY CORPORATION MAP 328, LOT 159 BK.30109, PG.323

PROP 40' UP #56/ 13A (BO)

PROP OHW SERVICE CONNECTION (BO)

REM UP #56/ 13 & GUY WIRE (BO)

PROP CROSSING: PROP TRENCH UNDER PROP 6" DI WATER

REM OHW (BO)

PROP 2 - 4" CATV, 4 - 4" TEL, 4 - 6" ELEC, 2 - 4" ELEC CONC. ENCASED CONDUITS (TRENCH - A11 ON SHEET 168)

ADJ. GG (BO)

PROP. SHLO

N/F MARGARET E CICCARELLI 1999 TRUST + EUGENE C CICCARELLI MAP 328 PARCEL 160 CERT# 212369 116 CAMP STREET

PROP 1 - 4" CATV, 1 - 4" TEL & 2 - 6" ELEC CONC. ENCASED CONDUITS

TEMP. EASEMENT

PROP 1 - 4" CATV, 3 - 4" TEL, 2 - 6" ELEC, 2 - 4" ELEC CONC. ENCASED CONDUITS (TRENCH - A12 ON SHEET 168)

BEGIN PROJECT STA. 201+00.00 (CAMP ST) N 2703082.3046 E 990577.3043

REM UP #56/ 12 (BO)

PROP. HS EASEMENT

PROP 1 - 4" CATV, 3 - 4" TEL, 2 - 6" ELEC CONC. ENCASED CONDUITS

N/F MARGARET E CICCARELLI 1999 TRUST + EUGENE CICCARELLI MAP 328, LOT 160 CERT #212369

PROP 1 - 4" CATV, 1 - 4" TEL STUB OUT

CAMP STREET

EXIST LO

PROP OHW (BO)

REM OHW (BO)

RET UP #56/ 11

RET OHW (BO)

RIM=31.43 INV.S.=28.18 FULL OF LEAVES

N/F 140 YARMOUTH ROAD LIMITED LIABILITY COMPANY MAP 328, LOT 195 BK.20661, PG.278

CONC. WALK

CONC. SIDEWALK

CONC. CURB

DOUBLE YELLOW LINE

GRASS

DCBR

12"W

12"G LP 2015

10"D

8"S

6"

18"S

18"W

18"D

UP /58/16 COND

UP /58/11H COND

200+00

0 20 50 100

SCALE: 1" = 20'

GLIDE SLOPE SURFACE - RW15-AC5300-ROW11_DEPARTURE

CONTINUED ON SHEET NO. 163

CONTINUED ON SHEET NO. 161

BARNSTABLE
IYANNOUGH RD (RTE 28) AND YARMOUTH RD

STATE	FED. AID PROJ. NO.	SHEET NO.	TOTAL SHEETS
MA	TAP/HSI/CMQ/STP/INFP(NI)-0035(043)	160	231
PROJECT FILE NO. 606272			

UTILITY PLANS
SHEET 5 OF 11

606272_UT(UTILITY PLANS).DWG Plotted on 3-Jun-2021 1:01 PM

NAD 83

PROP 2 - 4" CATV, 6 - 4" TEL, 9 - 6" ELEC CONC. ENCASED CONDUITS (TRENCH - A1 ON SHEET 167)

REM TEL PEDESTAL (BO)

REM EXIST 4" G CS (BO)

PROP 8" PL GAS MAIN (BO)

PROP 6'x10' EMH (SEE SHEET 178 FOR RIM INFORMATION)

PROP CATV HANDHOLE

PROP TMH (SEE SHEET 178 FOR RIM INFORMATION)

PROP CROSSING: PROP 8" PL GAS MAIN UNDER PROP 2 - 4" CATV

PROP 2 - 4" CATV CONC. ENCASED CONDUITS

REM OHW (BO)

REM UP #36/ 19A (BO)

PROP CATV PED (BO)

RET UGND CATV

PROP CROSSING: PROP 8" PL GAS UNDER PROP 12" DRAIN (BO)

REM OHW (BO)

TEMP. EASEMENT

EXTEND GAS SERVICE CONNECTION (BO)

REM UP #36/ 19 (BO)

REM GAS SERVICE (BUILDING HAS BEEN DEMOLISHED) (BO)

REM OHW (BO)

REM UP #36/ 18A (BO)

PROP. RAILROAD SIDELINE

PROP 2 - 4" CATV, 6 - 4" TEL, 9 - 6" ELEC CONC. ENCASED CONDUITS (TRENCH - A1 ON SHEET 167)

EXTEND GAS SERVICE CONNECTION (BO)

PROP 8" PL GAS MAIN (BO)

REM OHW (BO)

ADJ. GG (BO)

PROP. TOWN LO

TEMP. EASEMENT

PROP CROSSING: PROP 8" PL GAS (BO) UNDER TRENCHES

YARMOUTH ROAD

N/F TOWN OF BARNSTABLE MAP 328, LOT 142-2 BK.20708, PG.330

N/F COMMONWEALTH OF MASSACHUSETTS & YARMOUTH ROAD MAP 328 PARCEL 183 BOOK 3498 PAGE 92

N/F ATLANTIS IYANOUGH REALTY LLC 180 IYANNOUGH RD MAP 328 PARCEL 131 BOOK 25973 PAGE 311

N/F CEMAC, INC. MAP 328, LOT 137 BK.8255, PG.87

N/F SUNRISE NOMINEE TRUST MAP 328, LOT 148 PROBATE 99P1184EP BOOK 27837 PAGE 158

N/F EILA S. DESROCHERS, KATRI K KORPELA KORPELA REVOCABLE EDUCATION TRUST 114 IYANNOUGH RD MAP 328 PARCELS 144, 145 & 147 BOOK 3088 PAGE 170

N/F EILA S. DESROCHERS, KATRUK KORPELA, KORPELA REVOCABLE EDUCATION TRUST 114 IYANNOUGH RD MAP 328 PARCELS 144,

N/F D&S MACDONALD FAMILY TRUST

0 20 50 100

SCALE: 1" = 20'

CONTINUED ON SHEET NO. 157

CONTINUED ON SHEET NO. 162

BARNSTABLE
IYANNOUGH RD (RTE 28) AND YARMOUTH RD

STATE	FED. AID PROJ. NO.	SHEET NO.	TOTAL SHEETS
MA	TAP/HSI/CMQ/STP/NFP(N/I)-0035(043)	161	231
PROJECT FILE NO.	606272		

UTILITY PLANS
SHEET 6 OF 11

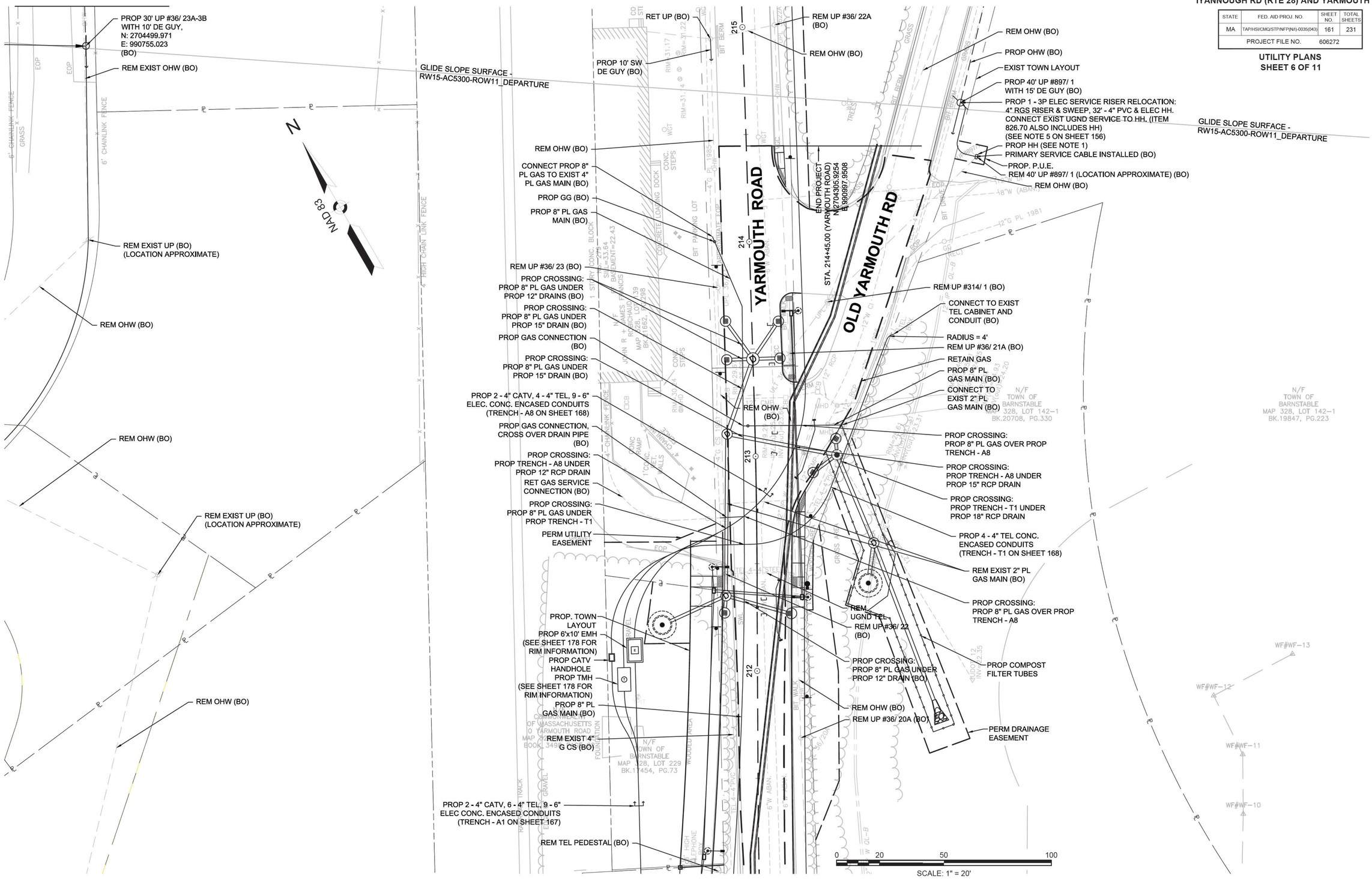

CONTINUED ON SHEET NO. 160

606272_UT(UTILITY PLANS).DWG Plotted on 3-Jun-2021 1:02 PM

BARNSTABLE
IYANNOUGH RD (RTE 28) AND YARMOUTH RD

STATE	FED. AID PROJ. NO.	SHEET NO.	TOTAL SHEETS
MA	TAP/HSI/CMQ/STP/INFP(NI)-0035(043)	162	231
PROJECT FILE NO. 606272			

UTILITY PLANS
SHEET 7 OF 11

606272_UT(UTILITY PLANS).DWG Plotted on 3-Jun-2021 1:03 PM

N

NAD 83

BROOKS ROAD

YARMOUTH ROAD

OLD YARMOUTH ROAD

PROP OHW (BO)

PROP 45' UP #36/ 23A-3 WITH 15' GUY & 15' DE GUY
N: 2704645.387
E: 990833.915
(BO)

PROP 45' UP #36/ 23A-2
N: 2704575.558
E: 990969.964
(BO)

PROP 93' - 36" STEEL CASING PIPE (BO)

PROP 9 - 6" PVC CONDUITS WITH ENDS OF PVC CONDUITS CAPPED (SEE SHEET 173)

PROP. CLEARING AND GRUBBING

RET CHAINLINK FENCE

PROP OHW (BO)

PROP. CLEARING AND GRUBBING

PROP 50' UP #36/ 23A-1
N: 2704536.851
E: 991045.254
(BO)

RET EXIST OHW

PROP 2 - 4" TEL CONC. ENCASED CONDUITS

PROP 50' UP #36/23A-0.5 WITH 15' DE GUY (BO)

PROP. PERM EASEMENT

PROP OHW (BO)

PROP 2 - 4" TEL PVC SWEEPS

PROP OHW (BO)

RET EXIST OHW

REM UP #36/ 23A (BO)

PROP 2 - 4" CATV, 2 - 6" ELEC CONC. ENCASED CONDUITS

RET UP #36/ 24A; PROP 20' PUSH BRACE (BO) (LOCATION APPROXIMATE)

PROP. PERM EASEMENT

PROP 50' UP #36/ 23A WITH 15' GUY & 15' DE GUY (BO)

PROP 2 - 4" TEL PVC SWEEPS & 2 - 6" ELEC RGS RISERS & SWEEPS

PROP 2 - 4" TEL, 2 - 6" ELEC CONC. ENCASED CONDUIT

PROP 4 - 4" TEL, 2 - 6" ELEC CONC. ENCASED CONDUIT

PROP 50' UP #36/ 22A WITH 20' PUSH BRACE & 15' DE GUY (BO)

PROP 2 - 4" CATV PVC SWEEP & 2 - 6" ELEC RGS RISERS & SWEEPS

PROP. P.U.E.

PROP OHW (BO)

RET 40' UP #314/ 3

PROP 15' DE GUY ON UP #314/ 3 (BO)

PROP. P.U.E.

GLIDE SLOPE SURFACE - RW15-AC5300-ROW11_DEPARTURE

PROP 2 - 4" CATV, 4 - 4" TEL, 4 - 6" ELEC. CONC. ENCASED CONDUITS (TRENCH - A10 ON SHEET 168)

PROP 6-6" ELEC CONC ENCASED CONDUITS

PROP SWITCHING ENCLOSURE

PROP CATV HANDHOLE

PROP 6'x10' EMH

PROP TEL HANDHOLE

REM EXIST UP 235 & GUY (BO)

PROP 30' UP #36/ 23A-3A
N: 2704561.906
E: 990788.232
(BO)

RET EXIST OHW, CONNECT TO PROP 30' UP (BO)

PROP OHW, REM EXIST OHW (BO)

PROP 30' UP #36/ 23A-3B WITH 10' DE GUY,
N: 2704499.971
E: 990755.023
(BO)

REM EXIST OHW (BO)

GLIDE SLOPE SURFACE - RW15-AC5300-ROW11_DEPARTURE

RET UP (BO)

PROP 10' SW DE GUY (BO)

REM UP #36/ 22A (BO)

REM OHW (BO)

REM OHW (BO)

PROP OHW (BO)

EXIST TOWN LAYOUT

PROP 40' UP #897/ 1 WITH 15' DE GUY (BO)

PROP 1 - 3P ELEC SERVICE RISER RELOCATION: 4" RGS RISER & SWEEP, 32' - 4" PVC & ELEC HH.

N/F TOWN OF BARNSTABLE MAP 328, LOT 142--1 BK.19847, PG.223

CONTINUED ON SHEET NO. 166

CONTINUED ON SHEET NO. 161

0 20 50 100

SCALE: 1" = 20'

BARNSTABLE
IYANNOUGH RD (RTE 28) AND YARMOUTH RD

STATE	FED. AID PROJ. NO.	SHEET NO.	TOTAL SHEETS
MA	TAP/HSI/CMQ/STP/INFP(NI)-0035(043)	163	231
PROJECT FILE NO. 606272			

UTILITY PLANS
SHEET 8 OF 11

606272_UT(UTILITY PLANS).DWG Plotted on 3-Jun-2021 1:04 PM

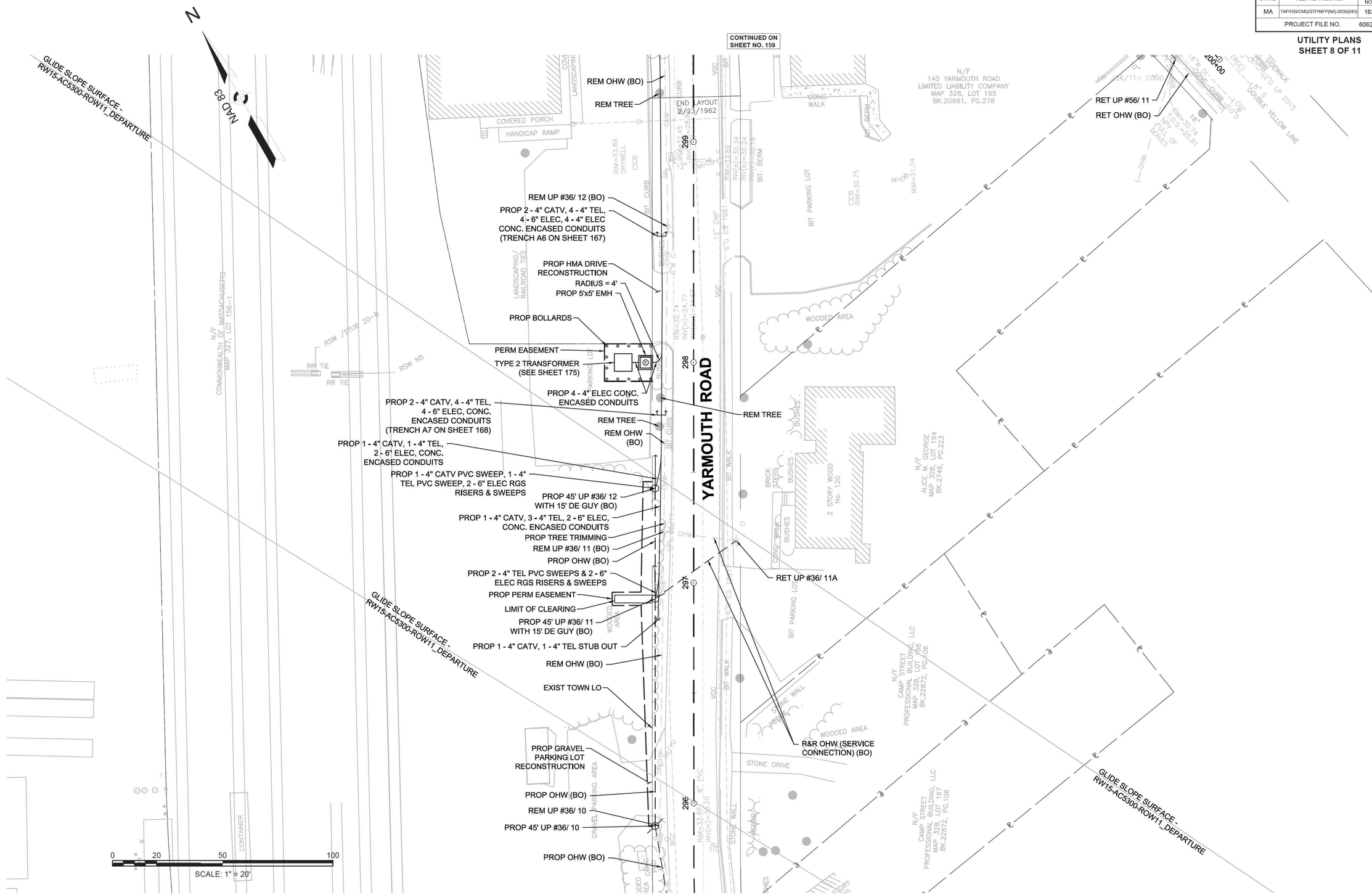

BARNSTABLE
IYANNOUGH RD (RTE 28) AND YARMOUTH RD

STATE	FED. AID PROJ. NO.	SHEET NO.	TOTAL SHEETS
MA	TAP/HSI/CMQ/STP/INFP(NI)-0035(043)	164	231
PROJECT FILE NO. 606272			

UTILITY PLANS
SHEET 9 OF 11

606272_UT(UTILITY PLANS).DWG Plotted on 3-Jun-2021 3:24 PM

CONTINUED ON SHEET 156

ENGINE HOUSE ROAD

TRANSPORTATION AVE.

PROP CATV PED (BO)
PROP TEL PED (BO)
PROP HH (SEE NOTE 1)
PROP HH (SEE NOTE 1)
PROP OHW (BO)
PC +44.67
PROP 2 - 4" CATV, 2 - 4" TEL, 9 - 6" ELEC CONC. ENCASED CONDUITS (TRENCH - A9 ON SHEET 168)
REM UP #150/ 14S (BO)
REM UP #9184/ 52 - 197/ 1 (BO)
PROP 2 - 4" CATV PVC SWEEPS & 2 - 4" TEL PVE SWEEPS
PROP 30' UP #9184/ 52 - 197/ 1 WITH 2 - 15' DE GUYS (BO)
PROP 9 - 6" ELEC CONC. ENCASED CONDUITS (TRENCH - E1 ON SHEET 169)
EXIST UTILITY EASEMENT
PROP 30' UP #9184/ 52-52.5 (BO)
PROP 6'x10' EMH
PROP 6-6" ELEC CONC ENCASED CONDUITS
PROP SWITCHING ENCLOSURE
R&R CHAIN LINK FENCE TO INSTALL EMH AND SWITCHING ENCLOSURE
R&R CURB
PROP 4 - 6" ELEC CONC. ENCASED CONDUITS (TRENCH - E2 ON SHEET 169)
REM UP #9184/ 53 REPLACE WITH 40' UP #9184/ 53 WITH 2 -15' DE GUYS (BO) (LOCATION APPROXIMATE)
REM UP #9184/ 54 (BO)
PROP 2 - 6" ELEC RGS RISERS & SWEEPS
PROP 2 - 4" CATV PVC SWEEPS
PROP OHW (BO)
PROP 2 - 6" ELEC CONC. ENCASED CONDUITS
PROP 45' UP #9184/ 54 WITH 15' DE GUY (BO)
PROP 2 - 6" ELEC RGS RISERS & SWEEPS
REM UP #9184/ 55; REPLACE WITH 50' UP #9184/ 55 WITH 2 - 15' DE GUYS (BO)
PROP 20' CHAIN LINK GATE
PROP LOAM AND SEED
R&R BOLLARD
PROP HMA SIDEWALK
R&R CHAIN LINK FENCE TO INSTALL ELECTRIC TRENCH
PROP HMA PARKING AREA AFTER TRENCH IS INSTALLED.
PROP CLEARING AND GRUBBING
PERM EASEMENT
TEMP. EASEMENT
PROP. COUNTY LAYOUT
GLIDE SLOPE SURFACE - RW15-AC5300-ROW12-OEI
GLIDE SLOPE SURFACE - RW15-AC5300-ROW11_DEPARTURE

N/F RIDGEWOOD AVENUE LIMITED PARTNERSHIP MAP 328 PARCEL 210/002 BOOK 9605 PAGE 15 55 ENGINE HOUSE ROAD

N/F BODICK NOMINEE TRUST 207 IYANNOUGH RD MAP 328 PARCEL 237 BOOK 31495 PAGE 76

N/F AMERIGAS PROPANE L.P. 193 IYANNOUGH RD MAP 328 PARCEL 203 BOOK 9670 PAGE 09

N/F GAS INC & AMERIGAS PROPANE L.P. MAP 328 PARCEL 202 BOOK 1209 PAGE 558

IYANNOUGH RD

N/F NINE ENGINE HOUSE ROAD CONDOMINIUM MAP 328 PARCEL 204 BOOK 18595 PAGE 311 9A ENGINE HOUSE ROAD

N

NAD 83

0 20 50 100
SCALE: 1" = 20'

BARNSTABLE
IYANNOUGH RD (RTE 28) AND YARMOUTH RD

STATE	FED. AID PROJ. NO.	SHEET NO.	TOTAL SHEETS
MA	TAP/HSI/CMQ/STP/INFP(NI)-0035(043)	165	231
PROJECT FILE NO. 606272			

UTILITY PLANS
SHEET 10 OF 11

606272_UT(UTILITY PLANS).DWG Plotted on 3-Jun-2021 1:06 PM

N

NAD 83

N/F
INHABITANTS OF BARNSTABLE
#290 IYANNOUGH ROAD
MAP 328, PARCEL 107
BOOK 517 PAGE 176

PROP 2 - 4" CATV SWEEPS
PERMANENT EASEMENT
PROP 15' GUY ON UP #150/ 20 (BO)
REM OHW (BO)
RET UP #150/ 20 (VERIFY #) (BO)
RET OHW
RET OHW
(2) 8" PTC STEEL
TO NANTUCKET
OL-B
PROP 2 - 4" CATV CONC. ENCASED CONDUITS (TRENCH - C1 ON SHEET 169)
PROP CATV HANDHOLE
REM UP #150/ 19 (VERIFY #) (BO)
PROP 2 - 4" CATV CONC. ENCASED CONDUITS (TRENCH - C1 ON SHEET 169)
REM UP #150/ 18 (BO)
GLIDE SLOPE SURFACE - AIRSPACE-P77-APPROACH-RW33
GLIDE SLOPE SURFACE - RW15-AC5300-ROW11_DEPARTURE
RET UP (VERIFY #) (BO)
(LOCATION APPROXIMATE)

IYANNOUGH ROAD (ROUTE 28)

RIDGEWOOD AVE
(LOCATION APPROXIMATE)

ENGINE HOUSE ROAD

BEGIN PROJECT
STA. 101+20.10 (RTE 28)
N 2704032.7293
E 989812.7260

N/F
BERGER REALTY LLC
258 IYANNOUGH RD
MAP 328 PARCEL 109
BOOK 30366 PAGE 54

GAS PUMP CANOPY
METAL POSTS
CONC. PAD
ABANDONED STATION
BIT PARKING LOT
BIT BERM
EXIST. SHLO
OHW
#150
100+00
101
CONNECT TO EXIST 6" G CS (BO)
8"W AC
8"G CS 1981
6" CS G OL-B
LANDSCAPED AREA
N/F
RIDGEWOOD AVENUE LLC
48 ENGINE HOUSE RD
MAP 328 PARCEL 007
BOOK 17108 PAGE 259
GRASS AREA
LANDSCAPED AREA
3' WOOD RAIL FENCE
5'X4' CONC. PAD
BIT PARKING LOT
2' WOOD PLANTER
R&R GG (BO)
RIM=36.59
MHD
CB
RIM=35.98
#251
"SUBWAY"
1-STORY WOOD COMMERCIAL
SILL=37.2'
SMH (REC)
GREASE TRAP
SMH VALVE CHAMBER
EOP
GRAVEL
OHW
GRASS
REM UP #197/ 4 (BO)
(LOCATION APPROXIMATE)

CONTINUED ON SHEET 156

0 20 50 100
SCALE: 1" = 20'

BARNSTABLE
IYANNOUGH RD (RTE 28) AND YARMOUTH RD

STATE	FED. AID PROJ. NO.	SHEET NO.	TOTAL SHEETS
MA	TAP/HSI/CMQ/STP/NFP(N/I)-0035(043)	166	231
PROJECT FILE NO.	606272		

UTILITY PLANS
SHEET 11 OF 11

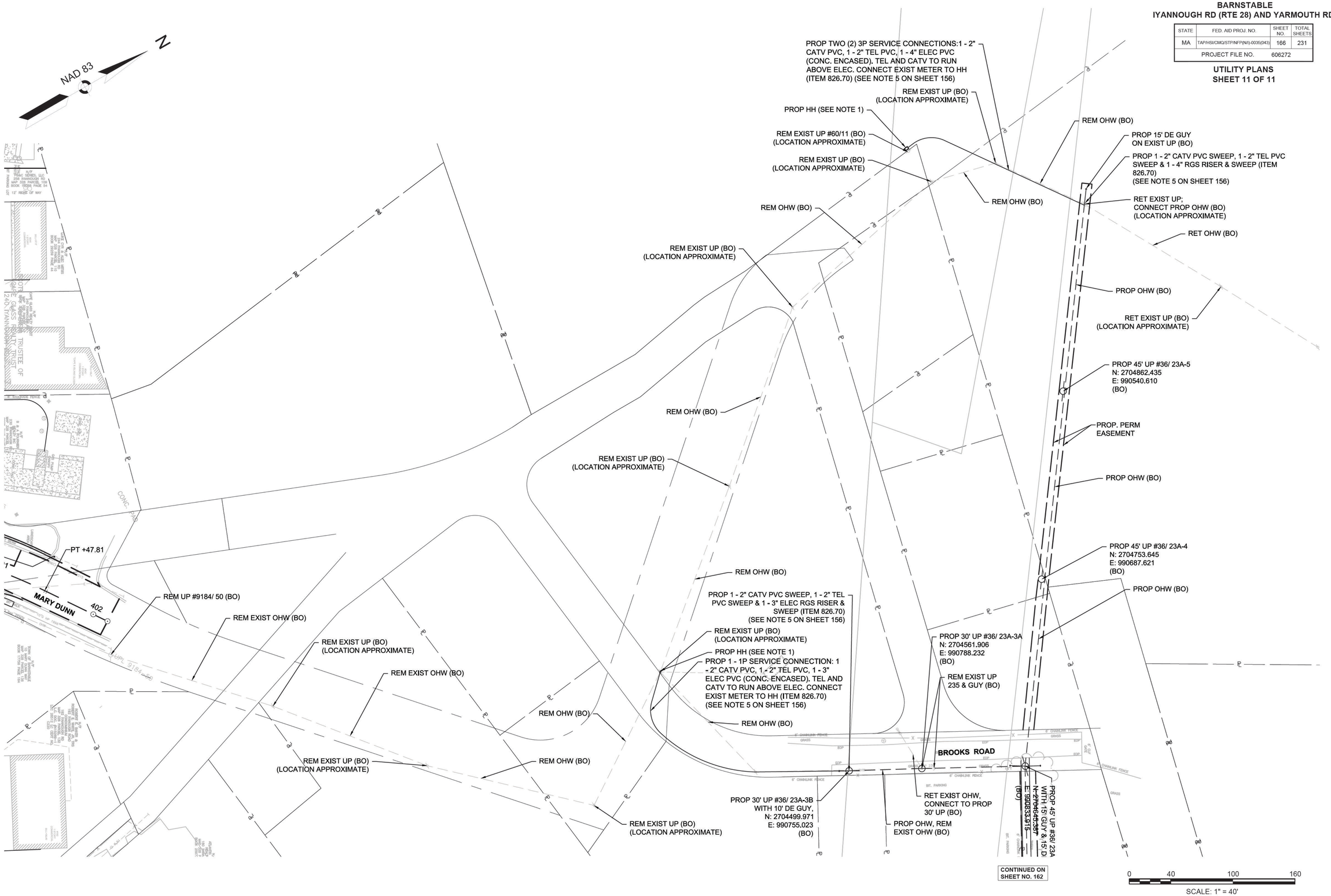

CONTINUED ON SHEET NO. 162

0 40 100 160
SCALE: 1" = 40'

606272_UT(UTILITY PLANS).DWG Plotted on 3-Jun-2021 1:08 PM

BARNSTABLE
IYANNOUGH RD (RTE 28) AND YARMOUTH RD

STATE	FED. AID PROJ. NO.	SHEET NO.	TOTAL SHEETS
MA	TAP/HSI/CMQ/STP/INFP(NI)-0035(043)	167	231
PROJECT FILE NO.	606272		

UTILITY DETAILS
SHEET 1 OF 11

606272_UTUTILITY DETAILS).DWG Plotted on 8-Apr-2021 5:49 PM

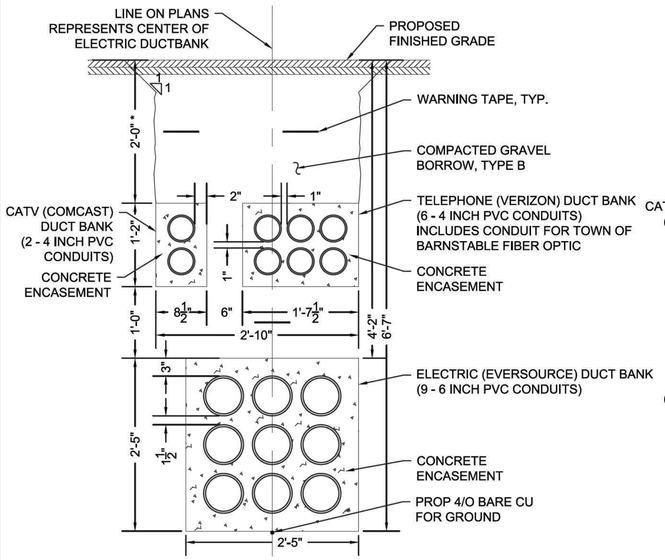

ELECTRIC / TELEPHONE / CATV TRENCH - A1

* FOR TRENCH A1, BETWEEN STATIONS 210+00 AND 212+00 MIN COVER SHALL BE 3.50 FEET BELOW THE PROPOSED EDGE OF GUTTER OF THE WEST SIDE OF YARMOUTH ROAD (TO ACCOUNT FOR FUTURE ROADWAY WIDENING)

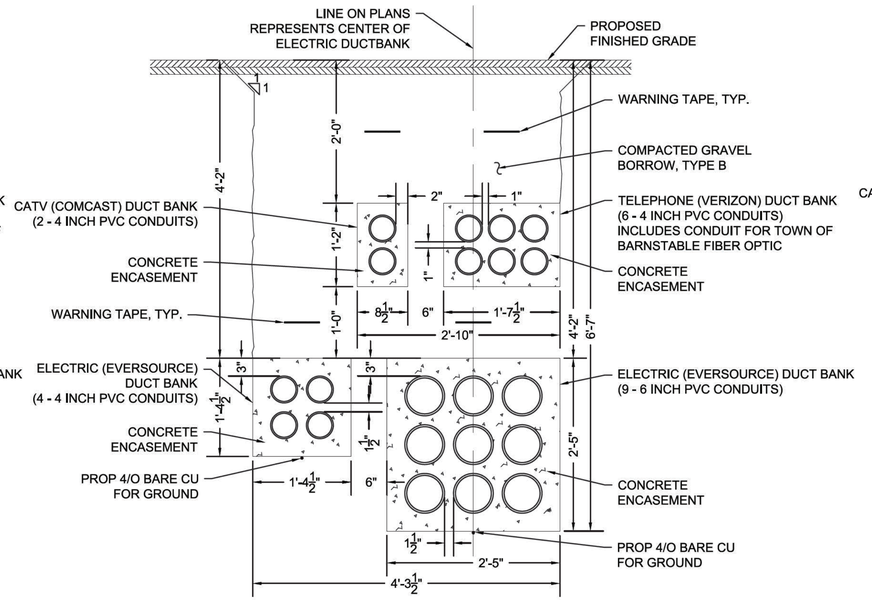

ELECTRIC / TELEPHONE / CATV TRENCH - A2

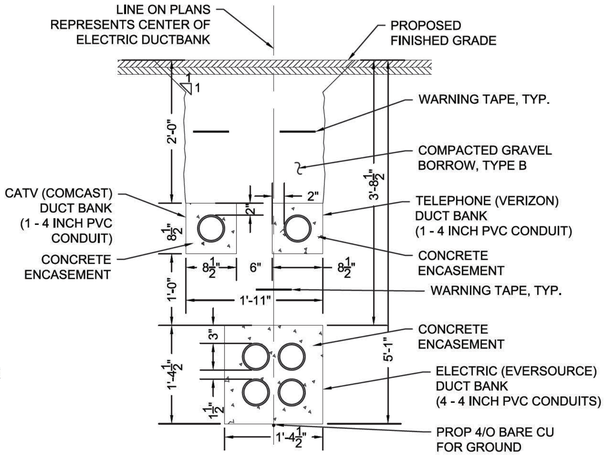

ELECTRIC / TELEPHONE / CATV TRENCH - A3

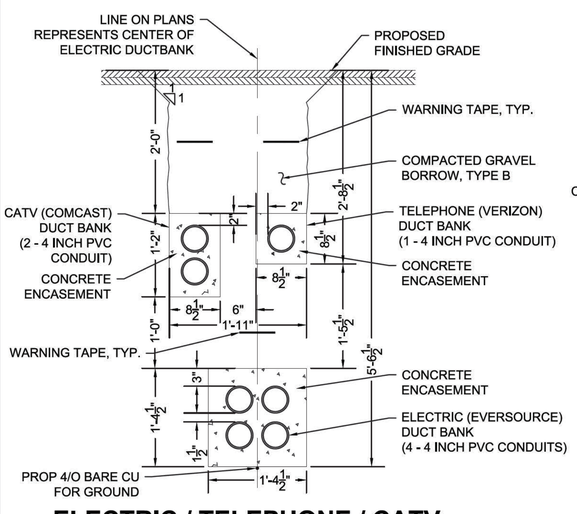

ELECTRIC / TELEPHONE / CATV TRENCH - A4

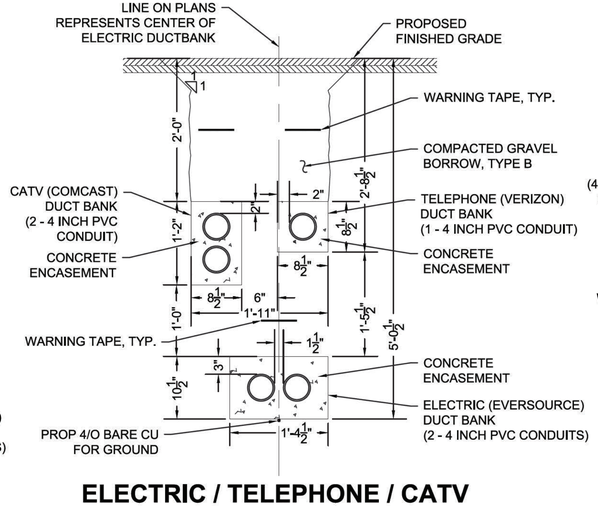

ELECTRIC / TELEPHONE / CATV TRENCH - A5

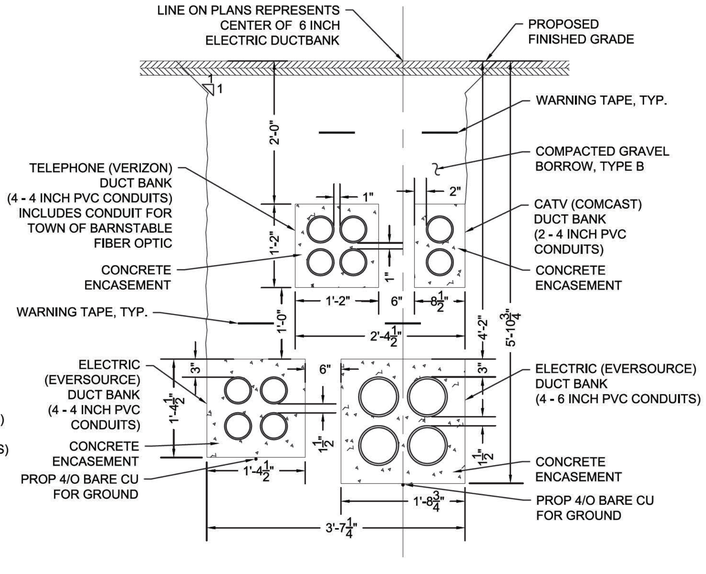

ELECTRIC / TELEPHONE / CATV TRENCH - A6

UTILITY TRENCH NOTES:

1. ALL CONSTRUCTION OF DUCT BANKS INCLUDING TRENCH, EXCAVATION, AND BACKFILL SHALL CONFORM TO UTILITY DETAILS AND SPECIFICATIONS.
2. FOR ALL DUCTS USE SCHEDULE 40 CONDUITS ENCASED IN 2,500 PSI, 3/8 INCH, 520 CEMENT CONCRETE CONCRETE. USE PLASTIC SPACERS TO MAINTAIN CONDUIT SPACING. SPACERS SHALL MEET UTILITY SPECIFICATIONS FOR DESIGN AND SPACING.
3. ALL TRENCH EXCAVATION ACTIVITIES SHALL COMPLY WITH ALL APPROPRIATE OSHA STANDARDS.
4. EACH DUCT BANK SHALL HAVE ASSOCIATED WARNING TAPE INSTALLED. ELECTRIC DUCT BANKS WILL HAVE 6 INCH, COLOR RED, DETECTABLE METALLIC WARNING TAPE PLACED 6 INCHES ABOVE CONCRETE ENCASEMENT. TELEPHONE AND CATV DUCT BANKS WILL HAVE 6 INCH, COLOR ORANGE, DETECTABLE METALLIC WARNING TAPE PLACED 12 INCHES ABOVE EACH CONCRETE ENCASEMENT.
5. A UTILITY COMPANY REPRESENTATIVE FROM EVERSOURCE SHALL BE PRESENT FOR ALL ELECTRICAL CONDUIT INSTALLED.
6. A UTILITY COMPANY REPRESENTATIVE FROM VERIZON SHALL BE PRESENT FOR ALL TELEPHONE CONDUIT INSTALLED.
7. A UTILITY COMPANY REPRESENTATIVE FROM COMCAST SHALL BE PRESENT FOR ALL CATV CONDUIT INSTALLED.
8. A MINIMUM OF 12 INCHES OF SEPARATION IS REQUIRED FOR CROSSINGS WITH GAS, WATER, SEWER AND DRAINAGE.
9. CONDUITS SHALL BE BLOWN CLEAN USING COMPRESSED AIR. RUN MANDREL THRU EACH CONDUIT TO CONFIRM VIABLE PATHWAY.
10. WOVEN POLYESTER MULE TAPE WITH MINIMUM STRENGTH OF 2500 LB TENSILE STRENGTH TO BE INSTALLED WITHIN EACH CONDUIT.
11. FOR ALL TRENCHES EXCEPT FOR E1 AND E2, TWO FEET OF COVER IS THE MINIMUM. TRENCH SHALL MAINTAIN MINIMUM SEPARATION REQUIREMENTS WHEN CROSSING UNDER GAS, AND WATER PIPES.

BARNSTABLE
IYANNOUGH RD (RTE 28) AND YARMOUTH RD

STATE	FED. AID PROJ. NO.	SHEET NO.	TOTAL SHEETS
MA	TAP/HSI/CMQ/STP/INFP(NI)-0035(043)	168	231
PROJECT FILE NO. 606272			

UTILITY DETAILS
SHEET 2 OF 11

606272_UTUTILITY DETAILS).DWG Plotted on 8-Apr-2021 5:49 PM

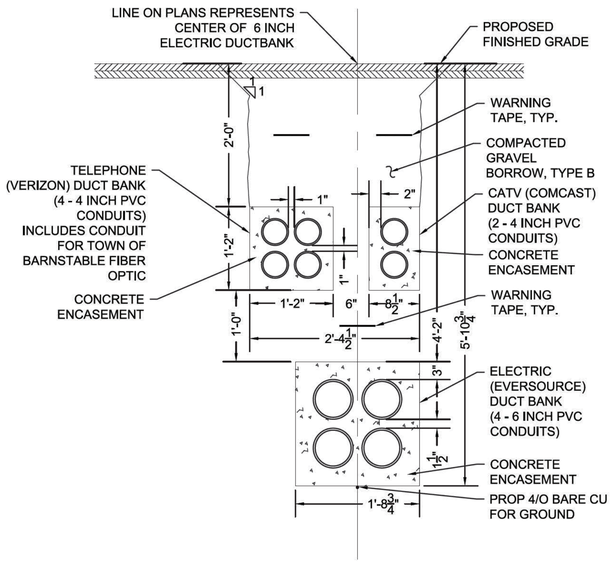

ELECTRIC / TELEPHONE / CATV TRENCH - A7

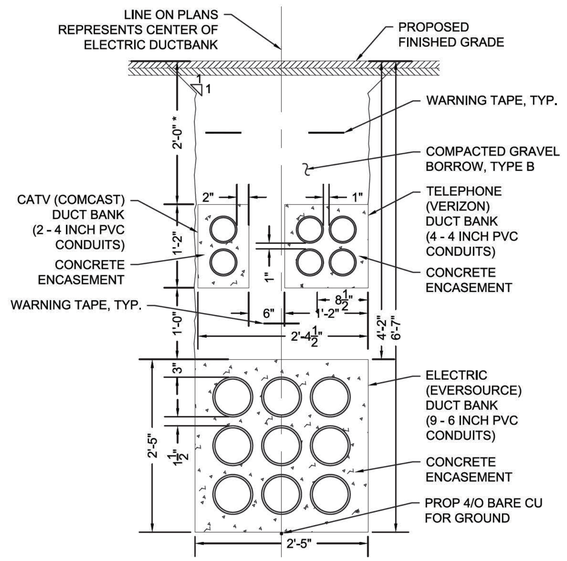

* FOR TRENCH A8, BETWEEN STATIONS 212+00 AND 213+50, MIN COVER SHALL BE 3.50 FEET.

ELECTRIC / TELEPHONE / CATV TRENCH - A8

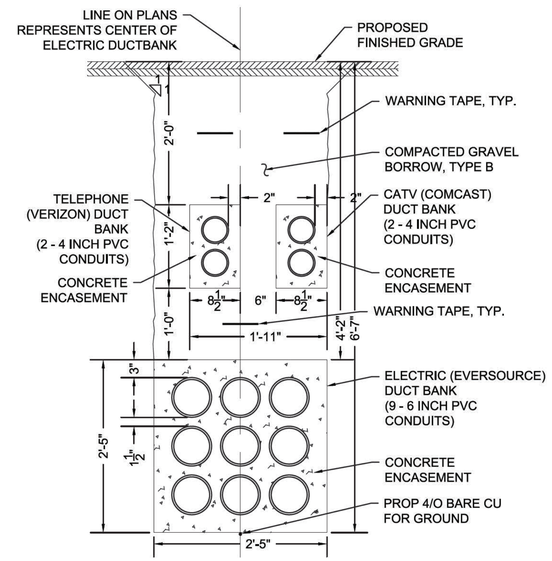

ELECTRIC / TELEPHONE / CATV TRENCH - A9

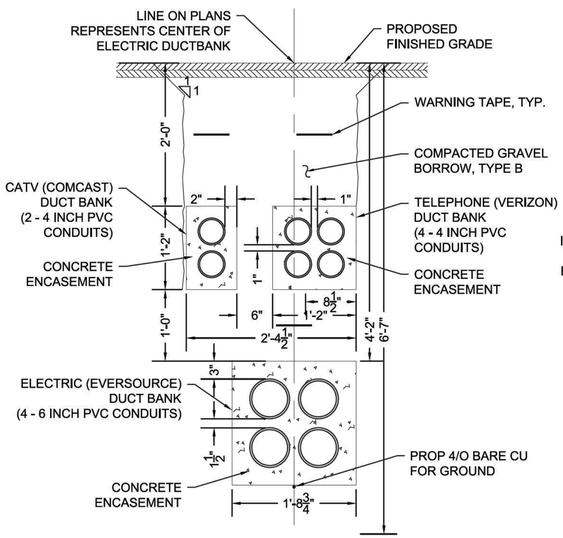

ELECTRIC / TELEPHONE / CATV TRENCH - A10

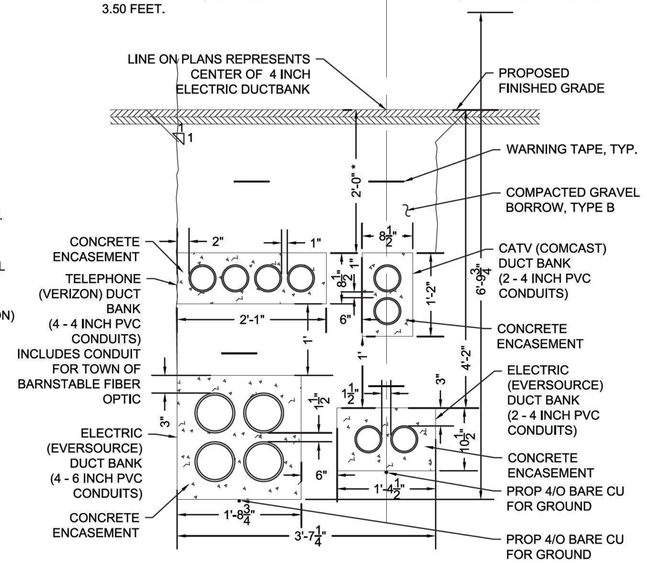

* TRENCH WILL CROSS OVER EXISTING GRAVITY SEWER.

ELECTRIC / TELEPHONE / CATV TRENCH - A11

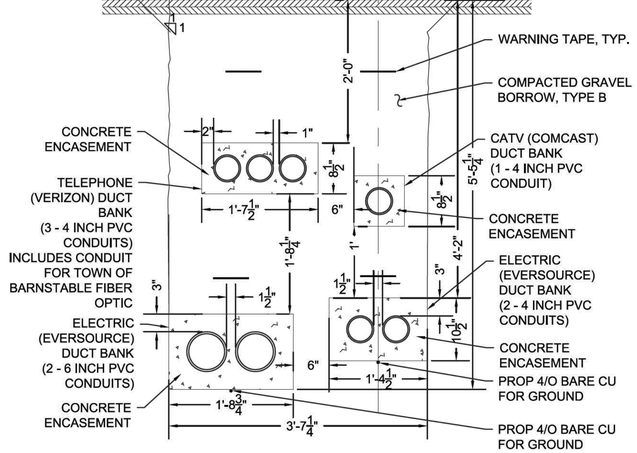

ELECTRIC / TELEPHONE / CATV TRENCH - A12

606272_UT(UTILITY DETAILS).DWG Plotted on 8-Apr-2021 5:50 PM

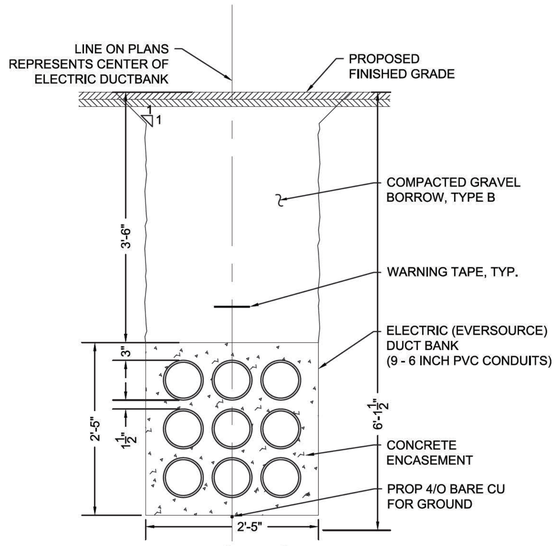

ELECTRIC TRENCH - E1

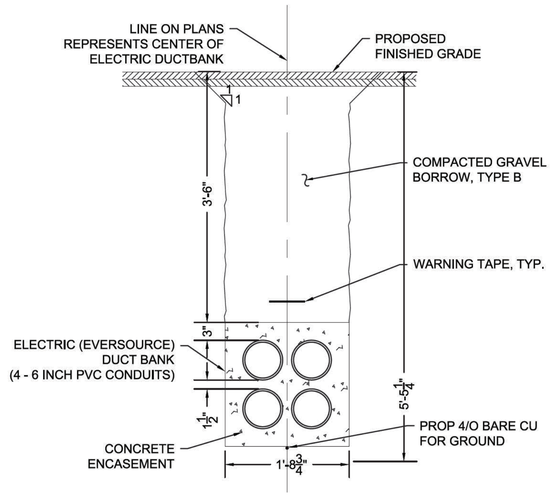

ELECTRIC TRENCH - E2

* 2' OF COVER IS THE MINIMUM. TRENCH SHALL MAINTAIN MINIMUM SEPARATION REQUIREMENTS WHEN CROSSING UNDER GAS, AND WATER PIPES.

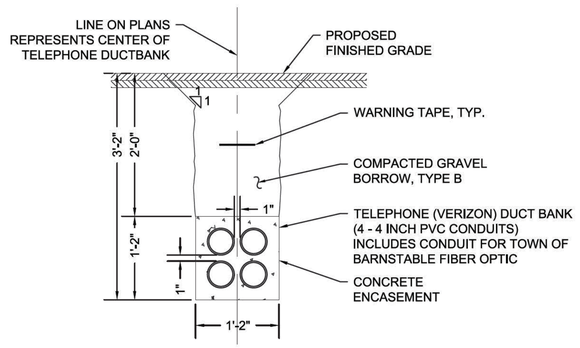

TELEPHONE TRENCH - T1

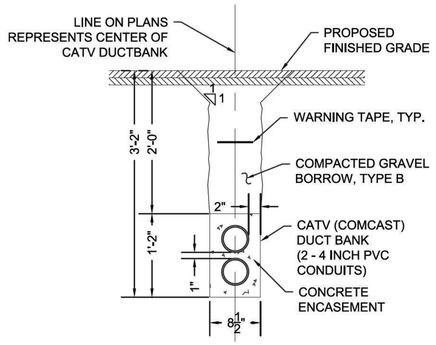

CATV TRENCH - C1

* 2' OF COVER IS THE MINIMUM. TRENCH SHALL MAINTAIN MINIMUM SEPARATION REQUIREMENTS WHEN CROSSING UNDER GAS, AND WATER PIPES.

GENERAL NOTES:

1. WHENEVER EQUIPMENT OR PERSONNEL ARE WORKING CLOSER THAN 15 FEET TO THE CENTERLINE OF AN ADJACENT TRACK, THAT TRACK SHALL BE CONSIDERED AS BEING OBSTRUCTED. INSOFAR AS POSSIBLE, ALL OPERATIONS SHALL BE CONDUCTED OUTSIDE THIS DISTANCE. ALL OPERATIONS WITHIN THE RAIL ROAD RIGHT OF WAY SHALL BE CONDUCTED ONLY WITH THE PERMISSION OF, AND AS DIRECTED BY, A DULY QUALIFIED RAILROAD EMPLOYEE PRESENT AT THE SITE OF THE WORK. CROSSING OF TRACKS AT GRADE WITH EQUIPMENT OR VEHICLES IS PROHIBITED EXCEPT BY PRIOR ARRANGEMENT WITH AND AS DIRECTED BY THE RAILROAD.
2. PRIOR TO CONSTRUCTION ACTIVITIES WITHIN 15 FEET OF THE CENTERLINE OF A RAILROAD TRACK, CONTRACTOR SHALL COORDINATE AND CONFIRM THAT THE RAILROAD IS OUT OF SERVICE TO COMPLETE THE WORK.
3. WELDED PLATES WERE INSTALLED BY OTHERS IN MARCH 2021 AT EACH RESPECTIVE END OF ELECTRIC AND TELECOM STEEL CASING PIPES. CONTRACTOR TO REMOVE WELDED PLATES PRIOR TO INSTALLING BULKHEAD, PVC CONDUITS, SPACERS, AND GROUT.
4. RUBBER SLEEVE END SEALS LOCATED AT EACH END OF RESPECTIVE CASING PIPES FOR WATER AND GAS WERE INSTALLED BY OTHERS IN MARCH 2021.
5. FOR BULKHEAD DETAILS AT ENDS OF STEEL CASING PIPES AND ELEVATIONS OF STEEL CASING PIPES SEE SHEET 171.
6. THE ENDS OF EXISTING 18 INCH SEWER CASING PIPE INSTALLED BY OTHERS IN MARCH 2021 ARE EXISTING SEWER MANHOLES. THESE SEWER MANHOLES ARE SHOWN ON SHEET 174.
7. FOR RAILROAD DATA CHARTS FOR STEEL PIPES CROSSING UNDER RAILROAD TRACKS SEE SHEET 172. CHARTS ARE SHOWN FOR REFERENCE. STEEL PIPES WERE INSTALLED BY OTHERS (BO) IN MARCH 2021.

BARNSTABLE
IYANNOUGH RD (RTE 28) AND YARMOUTH RD

STATE	FED. AID PROJ. NO.	SHEET NO.	TOTAL SHEETS
MA	TAP/HSI/CMQ/STP/INFP(NI)-0035(043)	170	231
PROJECT FILE NO. 606272			

UTILITY DETAILS
SHEET 4 OF 11

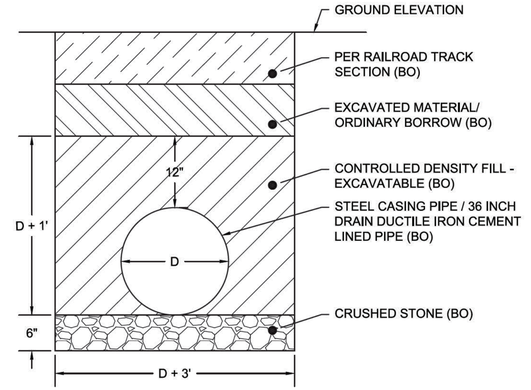

CASING PIPE TRENCH (BO)

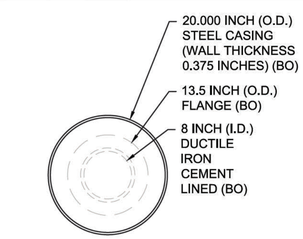

P:10 20" WATER (BO)

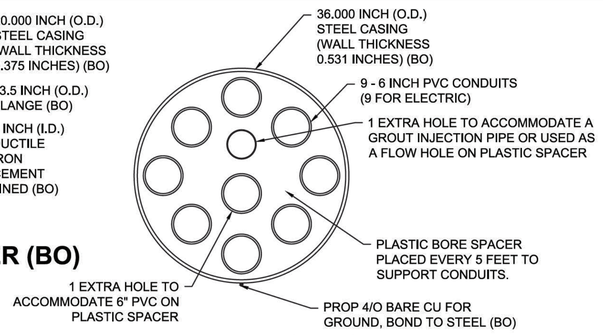

P-9: 36" ELECTRIC

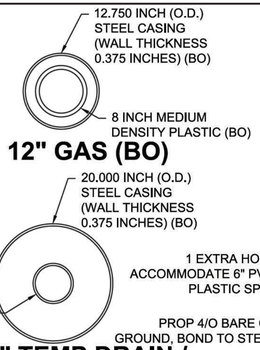

P-4: 12" GAS (BO)

P-8: 20" TEMP DRAIN / SEWER (BO)

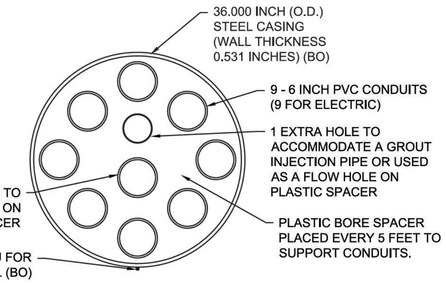

P-3: 36" ELECTRIC

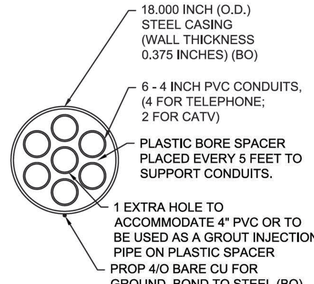

P-2: 18" TELEPHONE

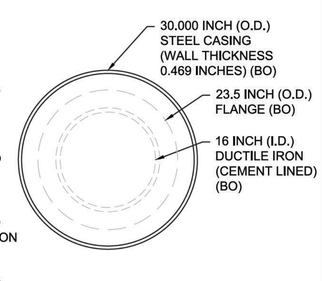

P-1: 30" WATER (BO)

PROPOSED STEEL CASING PIPES (P-9, P-10) NORTH OF INTERSECTION (BO)

PROPOSED STEEL CASING PIPES (P-1 - P-8) UNDER RAILROAD TRACKS ON ROUTE 28 (BO)

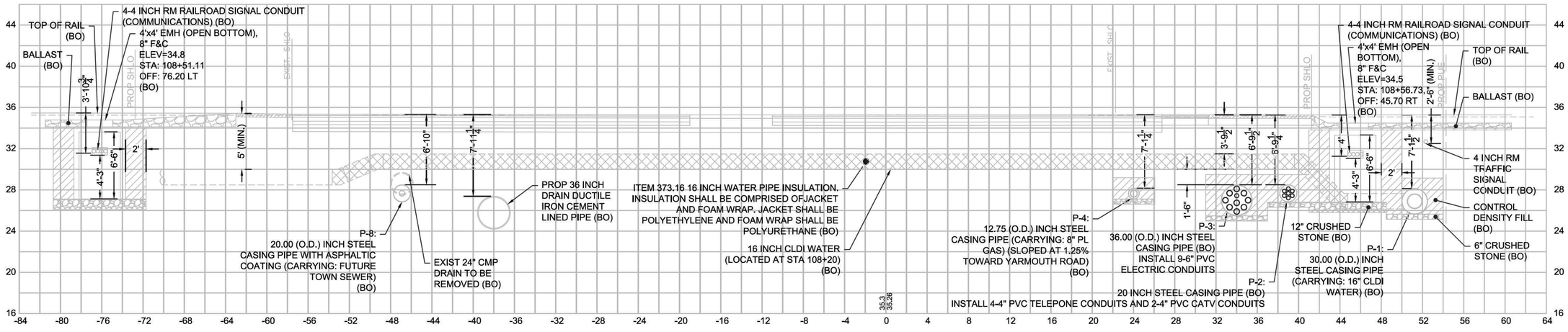

TYPICAL CROSS SECTION AT ON GRADE RAILROAD CROSSING SHOWING PROPOSED CASING PIPES (SECTION SHOWS AT STATION 109+00)

606272_UTUTILITY DETAILS).DWG Plotted on 9-Apr-2021 12:48 PM

SEWER / TEMP DRAINAGE STRUCTURE TABLE (BO)							
NAME	BASELINE	STATION	OFFSET	RIM ELEV.	INV. ELEV. IN	INV. ELEV. OUT	REMARKS
SMH X	ROUTE 28	108+27.07	48.51 L	35.33	I=28.28' (EX MHD) *	I=27.21' (SMH Y)	SEE SEWER NOTES
SMH Y	ROUTE 28	109+59.09	44.62 L	35.34	I=26.58' (SMH X)	I=27.06' (EX MHD) *	SEE SEWER NOTES

SEWER NOTES:

1. SMH X AND SMH Y ARE USED TO TIE INTO THE EXISTING REINFORCED CONCRETE PIPE (RCP). THE EXISTING PIPE BETWEEN SMH X AND SMH Y WILL BE REMOVED. A PROPOSED 18" STEEL PIPE WILL BE INSTALLED BETWEEN SMH X AND SMH Y. THIS STEEL PIPE IS USED TO CONVEY STORMWATER RUNOFF DURING THE TEMPORARY CONDITION. THE PERMANENT CONDITION FOR THE STEEL PIPE IS TO FUNCTION AS A CASING PIPE USED FOR A FUTURE SEWER FORCEMAIN. SMH X AND SMH Y TO REMAIN AFTER TEMPORARY CONDITION. (BO).
2. ONCE CONTRACTOR HAS PROPOSED DRAINAGE SYSTEM OPERATIONAL, THE EXISTING RCP ENTERING AND EXITING SMH X AND SMH Y SHALL BE REMOVED. THE SPACE (ON THE CORE LOCATION) ON THE MANHOLES SHALL BE SEALED WITH BRICK AND MORTAR AND APPROVED BY THE ENGINEER.

BARNSTABLE
IYANNOUGH RD (RTE 28) AND YARMOUTH RD

STATE	FED. AID PROJ. NO.	SHEET NO.	TOTAL SHEETS
MA	TAP/HSI/CMQ/STP/INFP(NI)-0035(043)	171	231
PROJECT FILE NO. 606272			

UTILITY DETAILS
SHEET 5 OF 11

606272_UT(UTILITY DETAILS).DWG Plotted on 8-Apr-2021 5:51 PM

LOCATION OF BOTTOM OF STEEL CASING PIPE ENDS (BO)										
			WEST OF RAILROAD TRACKS				EAST OF RAILROAD TRACKS			
NAME	O.D. (IN.)	CARRIER PIPE	BASELINE	STATION	OFFSET	B.O.P. ELEV.	BASELINE	STATION	OFFSET	B.O.P. ELEV.
P-1	30.00	WATER	ROUTE 28	108+30.80	50.95 R	26.00	ROUTE 28	109+65.68	52.91 R	25.31
P-2	18.00	TELECOM	ROUTE 28	108+29.49	38.70 R	27.00	ROUTE 28	109+64.89	40.60 R	27.00
P-3	36.00	ELECTRIC	ROUTE 28	108+29.51	33.70 R	25.50	ROUTE 28	109+65.10	35.61 R	25.50
P-4	12.75	GAS	ROUTE 28	108+29.55	23.70 R	27.44	ROUTE 28	109+65.54	25.63 R	24.70
P-8	20.00	TEMP DRAIN	SMH X				SMH Y			

LOCATION OF BOTTOM OF STEEL CASING PIPE ENDS (BO)								
			WEST OF RAILROAD TRACKS			EAST OF RAILROAD TRACKS		
NAME	O.D. (IN.)	CARRIER PIPE	NORTHING	EASTING	B.O.P. ELEV.	NORTHING	EASTING	B.O.P. ELEV.
P-9	36.00	ELECTRIC	2704581.813	990968.664	25.00	2704539.346	991051.402	25.00

NOTES:

1. CARRIER PIPE SUPPORTS, UTILIZE STAINLESS STEEL CASING SPACERS. SPACERS TO BE APPROVED BY ENGINEER.
2. UTILIZE RUBBER SLEEVE END SEAL. END SEALS TO BE APPROVED BY ENGINEER.

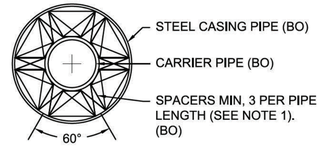

CARRIER PIPE DETAIL FOR WATER (BO), GAS (BO)

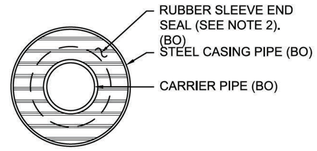

BULKHEAD DETAIL AT ENDS OF CASING FOR WATER (BO), GAS (BO)

ATTENTION SAFETY ENGINEER:
DANGER: DO NOT STAND IN FRONT OF BULK HEAD WHILE INJECTING GROUT.
REASON: THE BULK HEAD SHOWN ON THIS DRAWING HAS NOT BEEN PRESSURE TESTED.

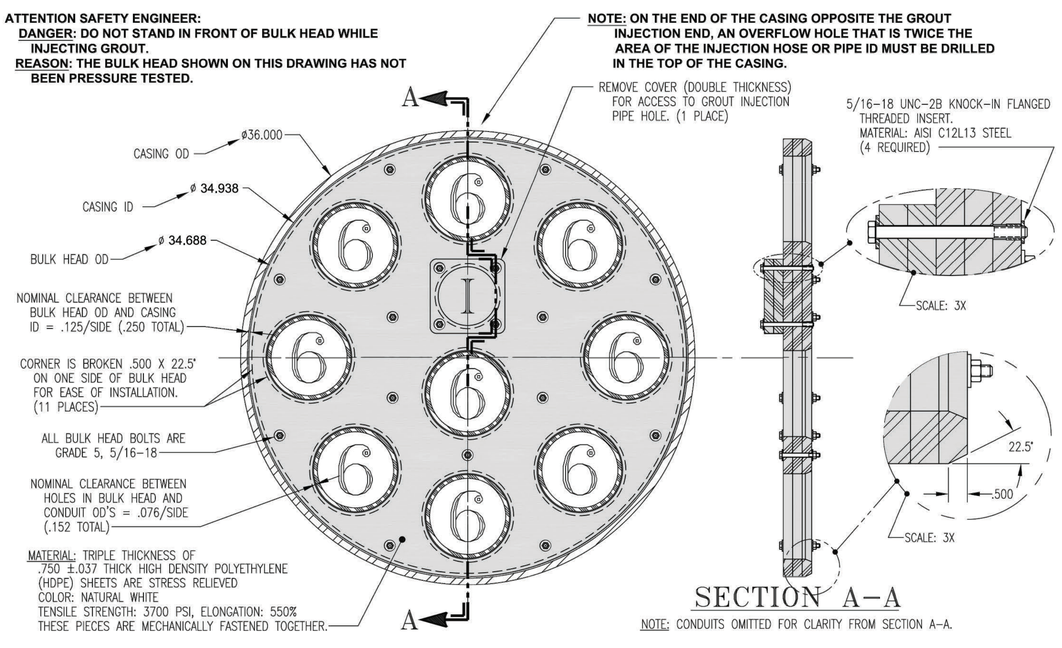

BULKHEAD DETAIL AT ENDS OF CASING FOR ELECTRIC

ATTENTION SAFETY ENGINEER:
DANGER: DO NOT STAND IN FRONT OF BULK HEAD WHILE INJECTING GROUT.
REASON: THE BULK HEAD SHOWN ON THIS DRAWING HAS NOT BEEN PRESSURE TESTED.

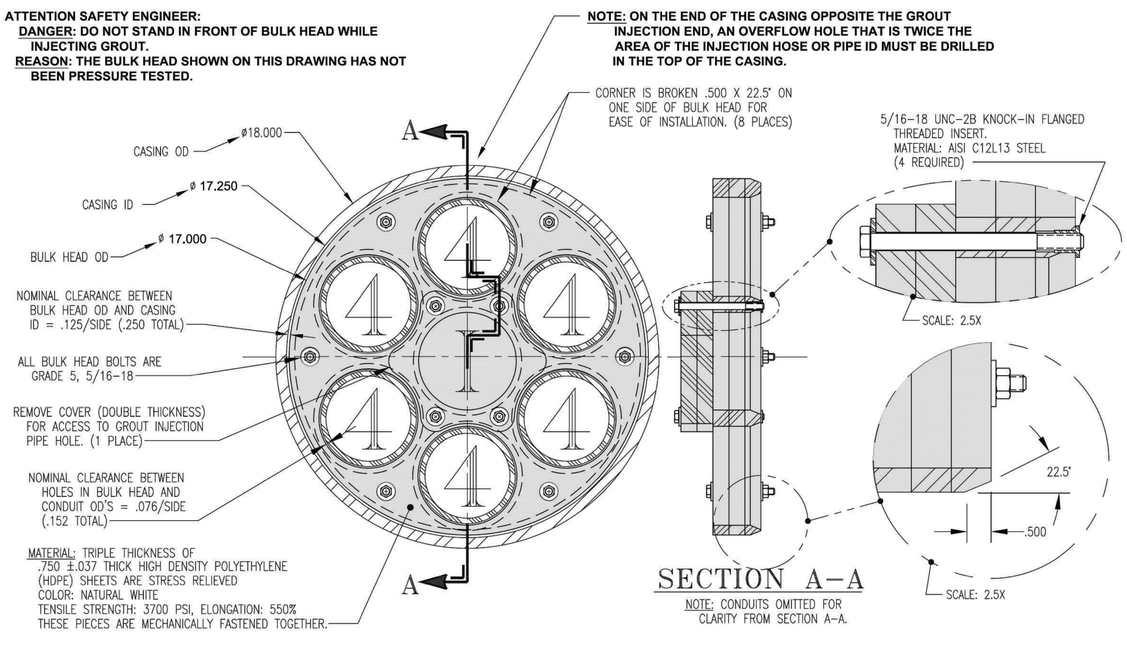

BULKHEAD DETAIL AT ENDS OF CASING FOR TELEPHONE

PIPE CROSSING RAILROAD AT IYANNOUGH ROAD (RT 28) - DATA CHART		
DESCRIPTION	CARRIER PIPE	CASING PIPE
CONTENTS TO BE HANDLED	WATER	16" DI WATER
INSIDE DIAMETER (INCHES)	16	29.062
OUTSIDE DIAMETER (INCHES)	17.4	30.000
MAX. OUTSIDE DIAM. (AT JOINTS) (INCHES)	19.74	N/A
PIPE MATERIAL	DUCTILE IRON	STEEL
SPECIFICATION AND GRADE		
WALL THICKNESS (INCHES)	0.6	0.469
ACTUAL WORKING PRESSURE		
TYPE OF JOINT	MECHANICAL JOINT	WELDED
COATING		YES
METHOD OF INSTALLATION	INSERTION	OPEN CUT
SEALS: BOTH ENDS: ONE END: TYPE:		BOTH
BURY: TOP OF RAIL TO TOP OF CASING		6'-6" MIN.
BURY: (NOT BENEATH TRACKS)	5'-0" MIN.	
BURY: (ROADWAY DITCHES)	5'-0" MIN.	
TYPE, SIZE AND SPACING OF SUPPORTS		
DISTANCE C.L. OF TRACK TO FACE OF PIT	N/A	N/A
BURY: BASE OF RAIL TO BOTTOM OF PIT		N/A
CATHODIC PROTECTION: YES OR NO	NO	NO

P-1: 30" STEEL CASING PIPE FOR WATER

PIPE CROSSING RAILROAD AT IYANNOUGH ROAD (RT 28) - DATA CHART		
DESCRIPTION	CARRIER PIPE	CASING PIPE
CONTENTS TO BE HANDLED	GAS	8" PL GAS
INSIDE DIAMETER (INCHES)	7.347	12.000
OUTSIDE DIAMETER (INCHES)	8.625	12.750
MAX. OUTSIDE DIAM. (AT JOINTS) (INCHES)	N/A	N/A
PIPE MATERIAL	MEDIUM PLASTIC	STEEL
SPECIFICATION AND GRADE		
WALL THICKNESS (INCHES)	0.639	0.375
ACTUAL WORKING PRESSURE		
TYPE OF JOINT	FUSED	WELDED
COATING	N/A	YES
METHOD OF INSTALLATION	INSERTION	OPEN CUT
SEALS: BOTH ENDS: ONE END: TYPE:		BOTH
BURY: TOP OF RAIL TO TOP OF CASING		6'-6" MIN.
BURY: (NOT BENEATH TRACKS)	3'-0" MIN.	
BURY: (ROADWAY DITCHES)	3'-0" MIN.	
TYPE, SIZE AND SPACING OF SUPPORTS		
DISTANCE C.L. OF TRACK TO FACE OF PIT	N/A	N/A
BURY: BASE OF RAIL TO BOTTOM OF PIT		N/A
CATHODIC PROTECTION: YES OR NO	NO	YES

P-4: 12" STEEL CASING PIPE FOR GAS

PIPE CROSSING RAILROAD AT IYANNOUGH ROAD (RT 28) - DATA CHART		
DESCRIPTION	CARRIER PIPE	CASING PIPE
CONTENTS TO BE HANDLED	SEWER (FUTURE)	FUTURE SEWER
INSIDE DIAMETER (INCHES)	-	19.250
OUTSIDE DIAMETER (INCHES)	-	20.000
MAX. OUTSIDE DIAM. (AT JOINTS) (INCHES)	-	N/A
PIPE MATERIAL	-	STEEL
SPECIFICATION AND GRADE		
WALL THICKNESS (INCHES)	-	0.375
ACTUAL WORKING PRESSURE		
TYPE OF JOINT	-	WELDED
COATING		YES
METHOD OF INSTALLATION	-	OPEN CUT
SEALS: BOTH ENDS: ONE END: TYPE:		BOTH
BURY: TOP OF RAIL TO TOP OF CASING		6'-6" MIN.
BURY: (NOT BENEATH TRACKS)	-	
BURY: (ROADWAY DITCHES)	-	
TYPE, SIZE AND SPACING OF SUPPORTS		
DISTANCE C.L. OF TRACK TO FACE OF PIT	-	N/A
BURY: BASE OF RAIL TO BOTTOM OF PIT		N/A
CATHODIC PROTECTION: YES OR NO	-	NO

P-8: 18" STEEL CASING PIPE FOR FUTURE SEWER / TEMP DRAINAGE

PIPE CROSSING RAILROAD AT IYANNOUGH ROAD (RT 28) - DATA CHART		
DESCRIPTION	CARRIER PIPE	CASING PIPE
CONTENTS TO BE HANDLED	ELECTRICAL	9-6" CONDUITS
INSIDE DIAMETER (INCHES)	6 EA	34.938
OUTSIDE DIAMETER (INCHES)	6.625	36.000
MAX. OUTSIDE DIAM. (AT JOINTS) (INCHES)	N/A	N/A
PIPE MATERIAL	PVC	STEEL
SPECIFICATION AND GRADE		
WALL THICKNESS (INCHES)	0.375	0.531
ACTUAL WORKING PRESSURE		
TYPE OF JOINT	SOLVENT WELD	WELDED
COATING		YES
METHOD OF INSTALLATION	INSERTION	OPEN CUT
SEALS: BOTH ENDS: ONE END: TYPE:		BOTH
BURY: TOP OF RAIL TO TOP OF CASING		6'-6" MIN.
BURY: (NOT BENEATH TRACKS)	2'-6" MIN.	
BURY: (ROADWAY DITCHES)	2'-6" MIN.	
TYPE, SIZE AND SPACING OF SUPPORTS		
DISTANCE C.L. OF TRACK TO FACE OF PIT	N/A	N/A
BURY: BASE OF RAIL TO BOTTOM OF PIT		N/A
CATHODIC PROTECTION: YES OR NO	NO	NO

P-3: 36" STEEL CASING PIPE FOR ELECTRIC

PIPE CROSSING RAILROAD AT IYANNOUGH ROAD (RT 28) - DATA CHART		
DESCRIPTION	CARRIER PIPE	CASING PIPE
CONTENTS TO BE HANDLED	TELEPHONE/CATV	6-4" CONDUITS
INSIDE DIAMETER (INCHES)	4 EA	17.250
OUTSIDE DIAMETER (INCHES)	4.50	18.000
MAX. OUTSIDE DIAM. (AT JOINTS) (INCHES)	N/A	N/A
PIPE MATERIAL	PVC	STEEL
SPECIFICATION AND GRADE		
WALL THICKNESS (INCHES)	0.375	0.375
ACTUAL WORKING PRESSURE		
TYPE OF JOINT	SOLVENT WELD	WELDED
COATING		YES
METHOD OF INSTALLATION	INSERTION	OPEN CUT
SEALS: BOTH ENDS: ONE END: TYPE:		BOTH
BURY: TOP OF RAIL TO TOP OF CASING		6'-6" MIN.
BURY: (NOT BENEATH TRACKS)	2'-0" MIN.	
BURY: (ROADWAY DITCHES)	2'-0" MIN.	
TYPE, SIZE AND SPACING OF SUPPORTS		
DISTANCE C.L. OF TRACK TO FACE OF PIT	N/A	N/A
BURY: BASE OF RAIL TO BOTTOM OF PIT		N/A
CATHODIC PROTECTION: YES OR NO	NO	NO

P-2: 18" STEEL CASING PIPE FOR TELEPHONE AND CABLE

PIPE CROSSING RAILROAD - DATA CHART		
DESCRIPTION	CARRIER PIPE	CASING PIPE
CONTENTS TO BE HANDLED	WATER	8" DI WATER
INSIDE DIAMETER (INCHES)	8	19.250
OUTSIDE DIAMETER (INCHES)	9.2	20.000
MAX. OUTSIDE DIAM. (AT JOINTS) (INCHES)	13.5	N/A
PIPE MATERIAL	DUCTILE IRON	STEEL
SPECIFICATION AND GRADE		
WALL THICKNESS (INCHES)	0.6	0.375
ACTUAL WORKING PRESSURE		
TYPE OF JOINT	MECHANICAL JOINT	WELDED
COATING		YES
METHOD OF INSTALLATION	INSERTION	OPEN CUT
SEALS: BOTH ENDS: ONE END: TYPE:		BOTH
BURY: TOP OF RAIL TO TOP OF CASING		6'-6" MIN.
BURY: (NOT BENEATH TRACKS)	5'-0" MIN.	
BURY: (ROADWAY DITCHES)	5'-0" MIN.	
TYPE, SIZE AND SPACING OF SUPPORTS		
DISTANCE C.L. OF TRACK TO FACE OF PIT	N/A	N/A
BURY: BASE OF RAIL TO BOTTOM OF PIT		N/A
CATHODIC PROTECTION: YES OR NO	NO	NO

P-10: 20" STEEL CASING FOR REDUNDANT WATER

PIPE CROSSING RAILROAD AT IYANNOUGH ROAD (RT 28) - DATA CHART		
DESCRIPTION	CARRIER PIPE	CASING PIPE
CONTENTS TO BE HANDLED	ELECTRICAL	9-6" CONDUITS
INSIDE DIAMETER (INCHES)	6 EA	34.938
OUTSIDE DIAMETER (INCHES)	6.625	36.000
MAX. OUTSIDE DIAM. (AT JOINTS) (INCHES)	N/A	N/A
PIPE MATERIAL	PVC	STEEL
SPECIFICATION AND GRADE		
WALL THICKNESS (INCHES)	0.375	0.531
ACTUAL WORKING PRESSURE		
TYPE OF JOINT	SOLVENT WELD	WELDED
COATING		YES
METHOD OF INSTALLATION	INSERTION	OPEN CUT
SEALS: BOTH ENDS: ONE END: TYPE:		BOTH
BURY: TOP OF RAIL TO TOP OF CASING		6'-6" MIN.
BURY: (NOT BENEATH TRACKS)	2'-6" MIN.	
BURY: (ROADWAY DITCHES)	2'-6" MIN.	
TYPE, SIZE AND SPACING OF SUPPORTS		
DISTANCE C.L. OF TRACK TO FACE OF PIT	N/A	N/A
BURY: BASE OF RAIL TO BOTTOM OF PIT		N/A
CATHODIC PROTECTION: YES OR NO	NO	NO

P-9: 36" STEEL CASING PIPE FOR FUTURE ELECTRIC

BARNSTABLE
IYANNOUGH RD (RTE 28) AND YARMOUTH RD

STATE	FED. AID PROJ. NO.	SHEET NO.	TOTAL SHEETS
MA	TAP/HSI/CMQ/STP/INFP(NI)-0035(043)	172	231
PROJECT FILE NO. 606272			

UTILITY DETAILS
SHEET 6 OF 11

NOTES:

1. STEEL CASING PIPES (P-1 - P-10) INSTALLED BY OTHERS (BO) IN MARCH 2021.
2. CARRIER PIPE FOR THE FOLLOWING STEEL CASING PIPES (P-X) ARE INSTALLED BY OTHERS (BO) IN MARCH 2021.

- P-1, 16" DI WATER
- P-4, 8" PL GAS
- P-10, 8" DI WATER

606272_UTUTILITY DETAILS).DWG Plotted on 9-Apr-2021 1:18 PM

BARNSTABLE
IYANNOUGH RD (RTE 28) AND YARMOUTH RD

STATE	FED. AID PROJ. NO.	SHEET NO.	TOTAL SHEETS
MA	TAP/HSI/CMQ/STP/INFP(NI)-0035(043)	173	231
PROJECT FILE NO. 606272			

UTILITY DETAILS
SHEET 7 OF 11

606272_UTUTILITY DETAILS).DWG Plotted on 8-Apr-2021 5:52 PM

PROPOSED 36 INCH STEEL CASING FOR ELEC CONC. ENCASED CONDUITS UNDER RAILROAD TRACKS UNDER ROUTE 28

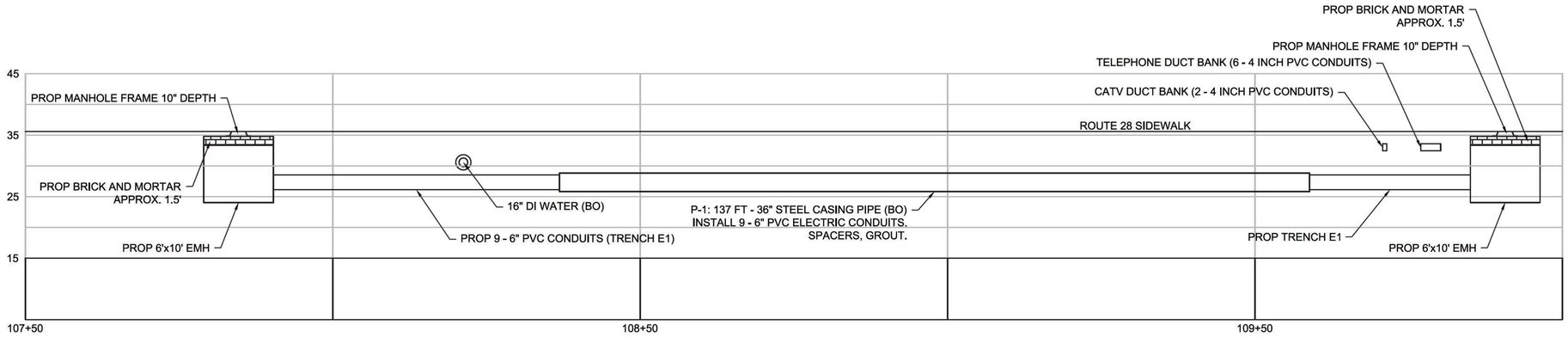

ROUTE 28 PROFILE

PROPOSED 36 INCH STEEL CASING FOR FUTURE ELECTRIC UNDER RAILROAD TRACKS

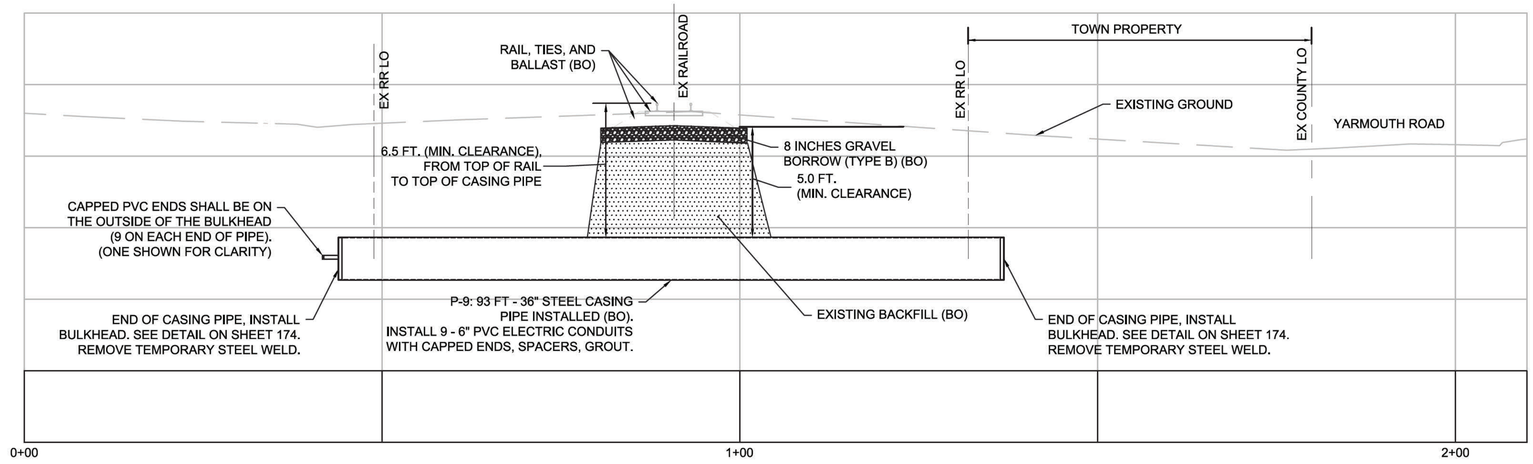

HOR. SCALE IN FEET
10 0 10 20
5 0 5 10
VER. SCALE IN FEET

606272_UT(UTILITY DETAILS).DWG Plotted on 8-Apr-2021 5:52 PM

2'–0" x 3'–0" **COMCAST** FLAT WALL PULL BOX x 36" DEEP

NOTES:
- CONCRETE IS DESIGNED FOR H–20–44 BRIDGE LOADING USING 5,500 PSI COMPRESSIVE STRENGTH CONCRETE AND 60,000 PSI A–706 REINFORCING STEEL.
- COVER DESIGNED FOR PARKWAY LOADING 200 PSF. OR TRAFFIC H–20 LOADING.
- VAULT TO BE PLACED ON A 6" BASE OF CRUSHER RUN FOR EASE OF INSTALLATION AND EVEN LOAD DISTRIBUTION.

RACKING PACKAGE:

14 HOLE CABLE RACKS W/ BOLTS = 4.

ORDERING INFORMATION:

PER VERIZON SPECIFICATIONS.
TOTAL WEIGHT FOR ASSEMBLY AS SHOWN 1,521#.

1. PB2436F–B30–05, 30" BOTTOM SECTION. WT. 1,115 lbs.
2. PB2436–T6F, 6" TOP SECTION W/CAST IN (F2436–PB–ANG) GALV. ANGLE FRAME. WT. 259 Lbs.
3A. SC2436–PSRAL, ONE PIECE SLIP RESISTANT PARKWAY COVER W/ RED PRIMER, ALUMINUM FINISH, MARKED "VERIZON".
3B. SC2436–TSRAL, ONE PIECE SLIP RESISTANT TRAFFIC COVER W/ RED PRIMER, ALUMINUM FINISH, MARKED "VERIZON".
5. 6" x 7" DIA. SUMP x 4" DEEP. BOTTOM SECTION (1).
6. 20" x 20" KNOCKOUT x 3" DEEP. BOTTOM SECTION (2)
7. 8" x 16" KNOCKOUT x 3" DEEP. BOTTOM SECTION (4).
8. 1" DIA. BLIND THRU GROUND ROD HOLE. BOTTOM SECTION (2)
9. 7/8" DIA. PULL IRON. BOTTOM SECTION (2)
10. 1/2" P–35–T INSERT W/CLEAN–OUT HOLE. TOP SECTION (2) FRAME MTD.
11. 1/2" PLASTIC INSERT. BOTTOM SECTION (16).

PARKWAY ASSEMBLY WITH STEEL B/D COVER K2436–FP36–13P.

LIGHT TRAFFIC ASSEMBLY WITH STEEL B/D COVER K2436–FP36–13T.

GENERAL NOTES:
1. Minimum soil bearing capacity is hereby assumed to be 2000 PSF unless otherwise documented by a geotechnical report that shall be provided to Jensen Precast by the end user. Jensen Precast shall not be held responsible for the soil bearing capacity.
2. Installation of Manholes, Vaults, Handholes, Meter Boxes etc. will be as per Jensen installation procedures.
3. Structural modification to the Jensen line of products is not permitted without prior written approval from Jensen Engineering Department.
4. Do not scale the drawings, verify all dimensions including rough openings, if any discrepancies are found, notify the Jensen Engineer immediately.
5. The Jensen Engineer will interpret the intent of the drawings in case of possible conflict or discrepancy.
6. Permissible Variations:
   Dimensional Tolerances – The length, width, height, or dia. measurements of the structure when measured on the inside surfaces shall not deviate form design dimensions by more than the following:

Dimensions:	Tolerance:
0 to 5 Feet	1/4"
5 to 10 Feet	3/8"

   10 to 20 Feet as agreed upon between the supplier and purchaser.
7. Squareness Tolerance:
   The inside of the precast concrete component shall be square as determined by diagonal measurements. The difference between such measurements shall not exceed the following:

Measured Length:	Allowable Difference
0 to 10 Feet	1/2"
10 to 20 Feet	3/4"

   20 Feet and over as agreed upon between the supplier and purchaser.

NOTE TO CONTRACTOR:

1. COMCAST DOES NOT HAVE A STANDARD HANDHOLE TO MEET THE REQUIRED LOADING FOR THIS PROJECT. AS A RESULT COMCAST IS OK WITH USING THIS STANDARD VERIZON DETAIL FOR USE ON THIS PROJECT. THE COVER SHALL SAY "COMCAST".

CHANGE VERIZON COVER TO SAY "COMCAST" FOR CATV HANDHOLES. FOR VERIZON HANDHOLE, COVER SHALL REMAIN "VERIZON".

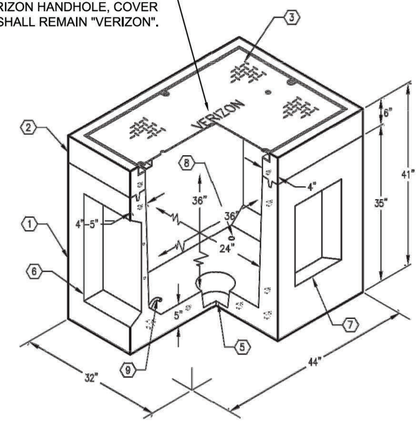

MINIMUM EXCAVATION SIZE:
3'–2" x 4'–8" x DEPTH REQ'D.

JENSEN PRECAST
AUTOCAD REL. 14

K2436–FP36–13
PER VERIZON SPECS. 03–01–02

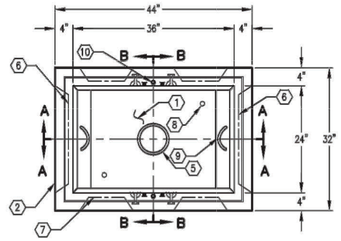

PLAN VIEW

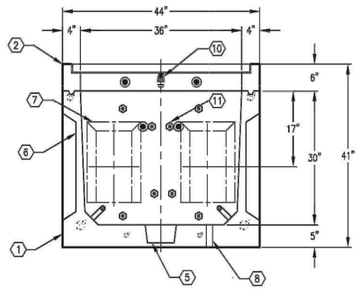

SECTION A–A

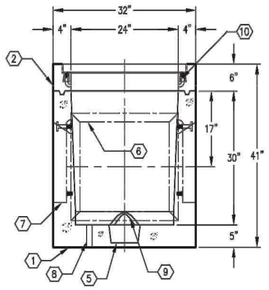

SECTION B–B

JENSEN PRECAST

#	DATE	DESCRIPTION	BY

K2436–FP36–13
PER VERIZON SPECS. 03–01–02

CATV AND TELEPHONE HANDHOLES

606272_UT(UTILITY DETAILS).DWG Plotted on 8-Apr-2021 5:53 PM

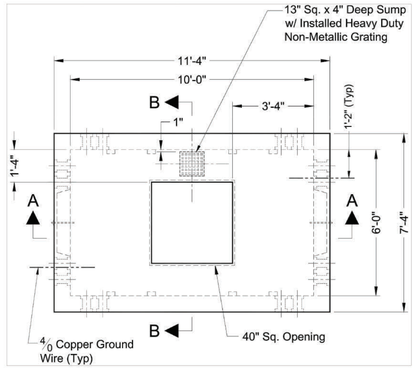

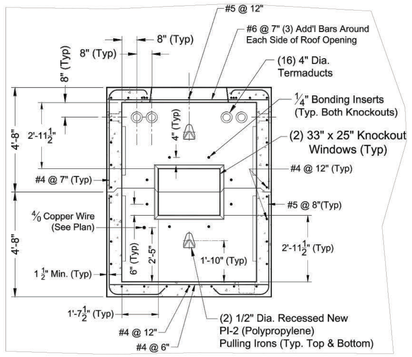

SECTION BB
NOTE: SHORT WALLS ARE MIRROR IMAGES

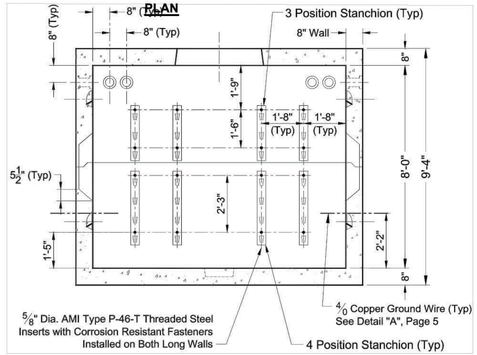

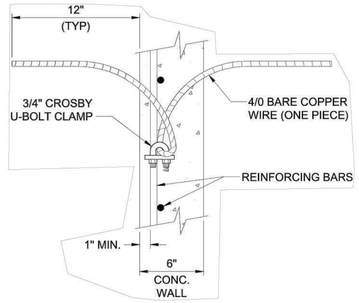

DETAIL "A"

SECTION AA

ELECTRIC MANHOLE 6'X10'
NTS

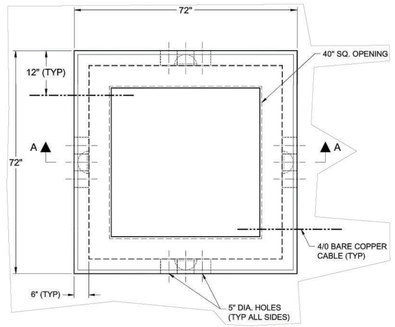

PLAN

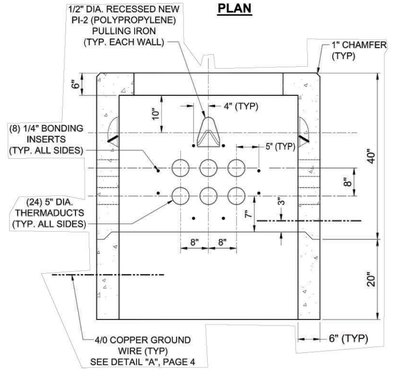

SECTION AA

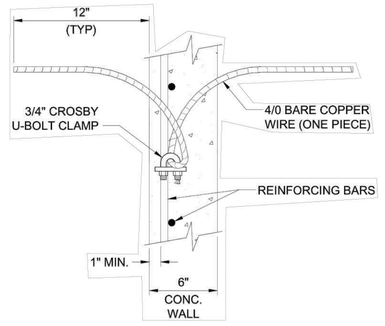

DETAIL "A"

ELECTRIC MANHOLE 5'X5'
NTS

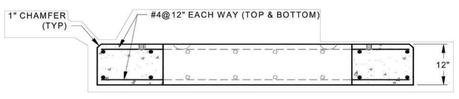

SECTION AA

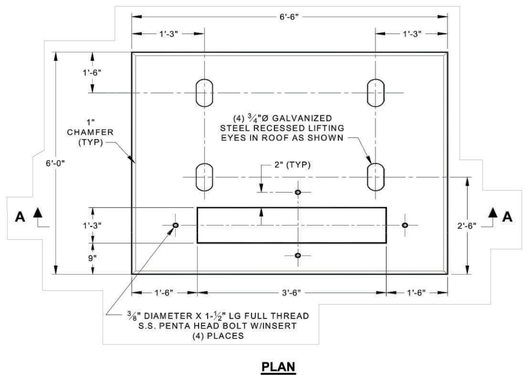

PLAN

TYPE 1 TRANSFORMER
(3 PHASE PAD TRANSFORMERS UP TO 300kVA)
NTS

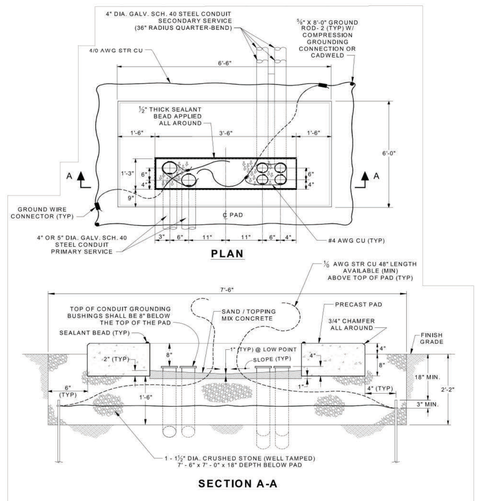

3 PHASE PAD TRANSFORMER UP TO 300kVA INSTALLATION & GROUNDING DETAIL
NTS

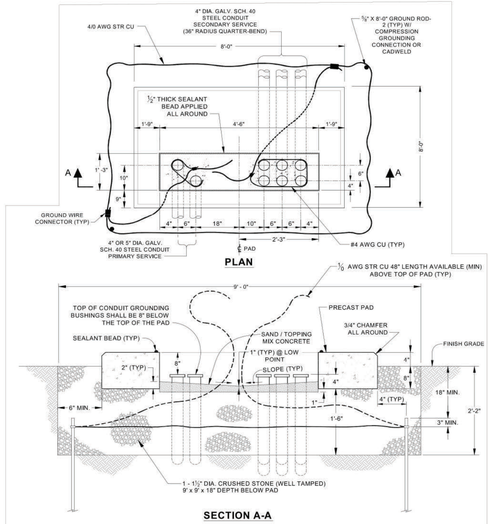

3 PHASE PAD TRANSFORMER UP TO 2,500kVA INSTALLATION & GROUNDING DETAIL
NTS

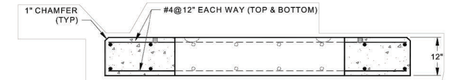

SECTION AA

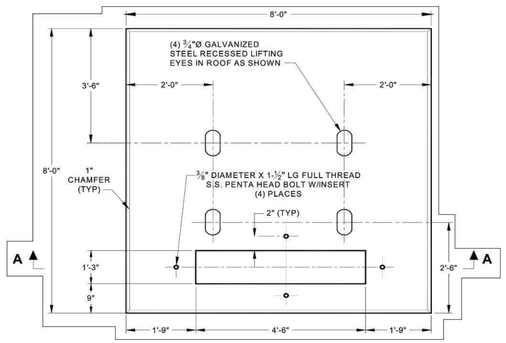

PLAN

TYPE 2 TRANSFORMER
(3 PHASE PAD TRANSFORMER UP TO 2500kVA)
NTS

BARNSTABLE
IYANNOUGH RD (RTE 28) AND YARMOUTH RD

STATE	FED. AID PROJ. NO.	SHEET NO.	TOTAL SHEETS
MA	TAP/HSI/CMQ/STP/INFP(NI)-0035(043)	176	231
PROJECT FILE NO.	606272		

UTILITY DETAILS
SHEET 10 OF 11

606272_UT(UTILITY DETAILS).DWG Plotted on 8-Apr-2021 5:53 PM

Issued 13-Aug-07	MATERIAL STANDARD ELECTRIC OPERATIONS ORGANIZATION NSTAR ELECTRIC	M1300 Revision #0 Page 2 of 3

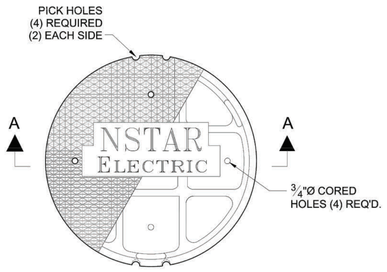

NOTE: COVER RAISED DIAMOND DESIGN
"NSTAR" IN 3" LETTERS
"E" & "LECTRIC" IN 2" & 1-1/2" LETTERS

PLAN

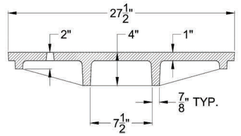

SECTION A-A

Fig. 1 – No. 1 Manhole Cover

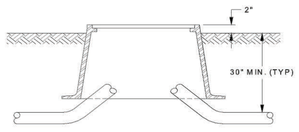

Figure 1 - Typical Handhole Installation

Issued 13-Aug-07	MATERIAL STANDARD ELECTRIC OPERATIONS ORGANIZATION NSTAR ELECTRIC	M1303 Revision #0 Page 2 of 3

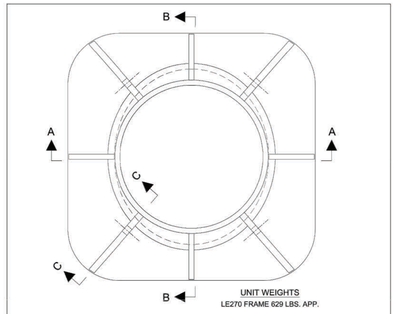

FIG. 1 – NO. 1 MANHOLE FRAME

Issued 13-Aug-07	MATERIAL STANDARD ELECTRIC OPERATIONS ORGANIZATION NSTAR ELECTRIC	M1308 Revision #0 Page 2 of 2

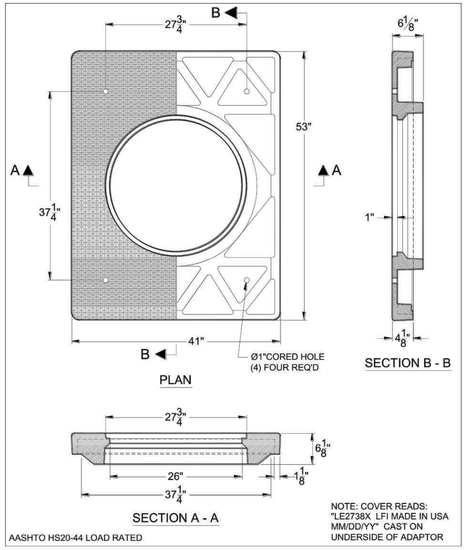

NOTE: DRAWING IS NOT TO SCALE

Issued 13-Aug-07	MATERIAL STANDARD ELECTRIC OPERATIONS ORGANIZATION NSTAR ELECTRIC	M1303 Revision #0 Page 3 of 3

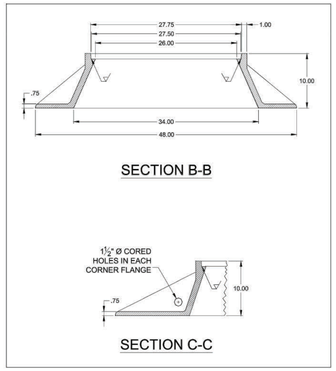

FIG. 2 – NO. 1 MANHOLE FRAME

ISSUED 07-Aug-09	CONSTRUCTION STANDARD ELECTRIC OPERATIONS ORGANIZATION NSTAR ELECTRIC	C3814 Revision 0 Page 11 of 17

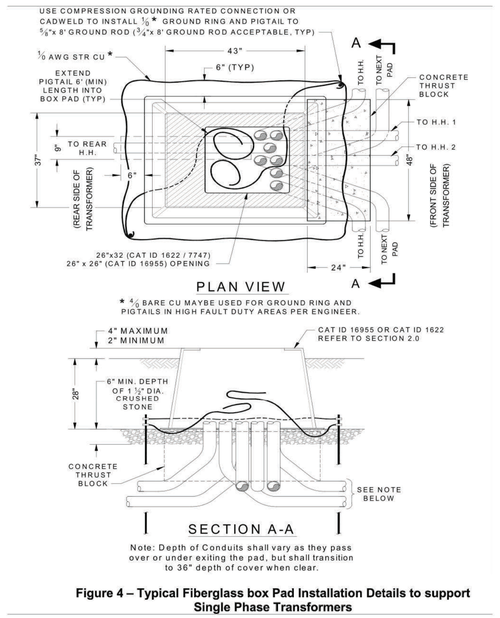

Note: Depth of Conduits shall vary as they pass over or under exiting the pad, but shall transition to 36" depth of cover when clear.

Figure 4 – Typical Fiberglass box Pad Installation Details to support Single Phase Transformers

Issued 13-Aug-07	MATERIAL STANDARD ELECTRIC OPERATIONS ORGANIZATION NSTAR ELECTRIC	M1307 Revision #0 Page 2 of 2

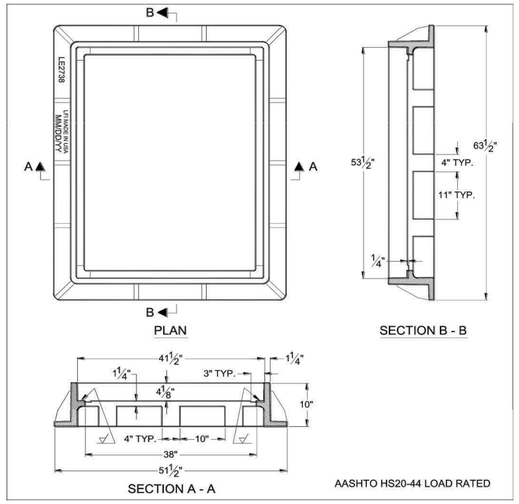

ISSUED 07-Aug-09	CONSTRUCTION STANDARD ELECTRIC OPERATIONS ORGANIZATION NSTAR ELECTRIC	C3814 Revision 0 Page 14 of 17

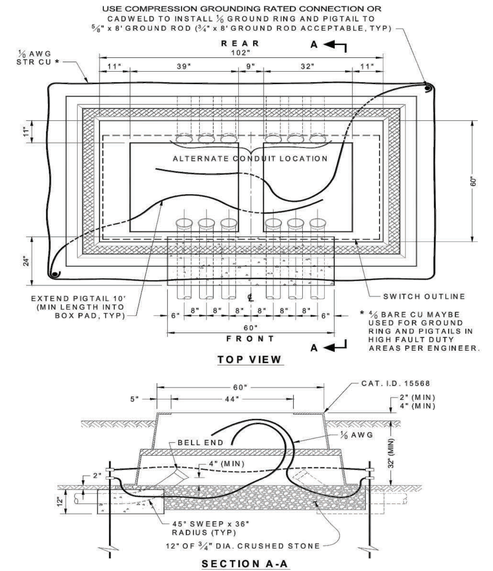

Figure 7– Typical Fiberglass box Pad Installation Details to support 15kV, G & W Model PVI-9, SF-6 Switch

606272_UT(UTILITY DETAILS).DWG Plotted on 4-Jun-2021 10:32 AM

5'–0" X 10'–6" VERIZON MANHOLE x 6'–6" DEEP

NOTES:

- MANHOLE DESIGNED IN ACCORDANCE WITH AASHTO H–20–44 TRAFFIC BRIDGE LOADING USING 5,500 PSI [37.92MPa] COMPRESSIVE STRENGTH CONCRETE AND 60,000 PSI [413.2MPa] YIELD STRENGTH ASTM A–706 STEEL REINFORCEMENT PER CALCS. #31148.
- MANHOLE TO BE PLACED ON A MIN. 6" BASE OF CRUSHER RUN FOR EASE OF INSTALLATION AND EVEN LOAD DISTRIBUTION.
- LIMIT OF COVER OVER ROOF SECTION IS 1'–6" TO 5'–0".
- ALL WALLS AND CEILINGS SHALL BE PAINTED WHITE.

THE FOLLOWING MATERIAL TO BE SHIPPED WITH THE MANHOLE

a) 7/8" x 1 3/4" GASKET (45 FT. REQ'D.).
b) 1/2" x 2" HEX HEAD PLATED BOLTS (32 REQ'D.).
c) 1/2" x 1 1/4" HEX HEAD PLATED BOLTS (24 REQ'D.).
d) 1/2" HEAVY HEX HEAD GALV. NUT (24 REQ'D.).
e) 1/4" x 3/4" HEX HEAD PLATED BOLTS (16 REQ'D.).
f) 1/4" FENDER WASHER PLATED (32 REQ'D.).
g) BONDING RIBBON (28 FT.).
h) 14 HOLE CABLE RACKS (8 REQ'D.).
i) 32 HOLE CABLE RACKS (8 REQ'D.).
j) S SUPPORTS (30 REQ'D.).
k) A–338.3 LADDER STEPS (2 REQ'D.).
l) A–3600 LADDER 8' (1 REQ'D.).

ORDERING INFORMATION:

K5106FM78–13 FOR ASSEMBLY AS SHOWN.
APPROVED FOR VERIZON SPEC. GTS–8395.
TOTAL WEIGHT OF ASSEMBLY SHOWN AS 27,325 Lbs.

1. UV5106–B54–13, 54" BOTTOM SECTION. WT. 17,122 lbs.
2. UV5106–T24–13, 24" TOP SECTION. WT. 10,203 lbs.
3. 12" x 13" DIA. SUMP x 5" DEEP. BOTTOM SECTION (1) CORE MTD.
4. 4" DIA. GRAY TERMS, LOCATE AS FOLLOWS: BOTTOM SECTION (16) SHELL MTD.
5. 7" x 12" K.O. x 4 1/2" DEEP. DRAFT T=2", S1–S2=1", B=0". TOP SECTION (4) SHELL MTD.
6. 7/8" DIA. 3 3/8" GALV. PULL IRON. TOP SECTION (4) CORE MTD.
6A. 7/8" DIA. x 9" GALV. PULL IRON BTM. SECTION (4) CORE MTD.
7. 1/2" PLASTIC RACKING INSERT. BOTTOM SECTION (16) CORE MTD. TOP SECTION (8) CORE MTD.
8. 1/2" THR'D. BRONZE INSERT BRAZED TO STRUCTURAL STEEL. "GRD" SHALL BE STENCILED IN RED LETTERS ON THE CONCRETE ABOVE INSERT. BOTTOM SECTION (8) CORE MTD.; TOP SECTION (8) CORE MTD.
9. 1/4" THR'D. BRONZE INSERT W/TAIL BRAZED TO STRUCTURAL STEEL. "GRD" SHALL BE STENCILED IN RED LETTER ON THE CONCRETE ABOVE EACH INSERT. BOTTOM SECTION (4) CORE MTD.; TOP SECTION (4) CORE MTD.
10. 1/4" P–15–T INSERT. BOTTOM SECTION (4) CORE MTD.; TOP SECTION (4) CORE MTD.

GENERAL NOTES:
1. Minimum soil bearing capacity is hereby assumed to be 2000 PSF unless otherwise documented by a geotechnical report that shall be provided to Jensen Precast by the end user. Jensen Precast shall not be held responsible for the soil bearing capacity.
2. Installation of Manholes, Vaults, Handholes, Meter Boxes etc. will be as per Jensen installation procedures.
3. Structural modification to the Jensen line of products is not permitted without prior written approval from Jensen Engineering Department.
4. Do not scale the drawings, verify all dimensions including rough openings. If any discrepancies are found, notify the Jensen Engineer immediately.
5. The Jensen Engineer will interpret the intent of the drawings in case of possible conflict or discrepancy.
6. Permissible Variations:
   Dimensional Tolerances – The length, width, height, or dia. measurements of the structure when measured on the inside surfaces shall not deviate form design dimensions by more than the following:

Dimensions:	Tolerance:
0 to 5 Feet	1/4"
5 to 10 Feet	3/8"
10 to 20 Feet	as agreed upon between the supplier and purchaser.

7. Squareness Tolerance:
   The inside of the precast concrete component shall be square as determined by diagonal measurements. The difference between such measurements shall not exceed the following:

Measured Length:	Allowable Difference
0 to 10 Feet	1/2"
10 to 20 Feet	3/4"
20 Feet and over	as agreed upon between the supplier and purchaser.

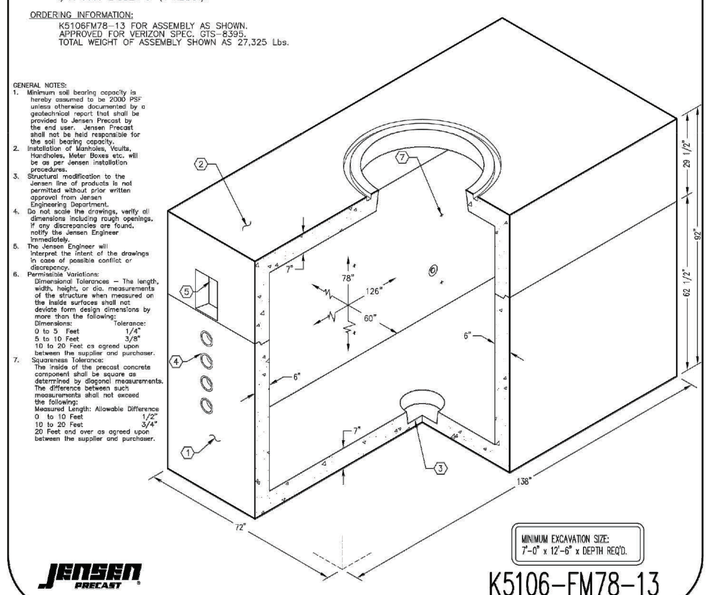

MINIMUM EXCAVATION SIZE:
7'–0" x 12'–6" x DEPTH REQ'D.

JENSEN PRECAST
AUTOCAD REL. 14

K5106–FM78–13
PER VERIZON SPEC'S GTS–8395 02–01–02

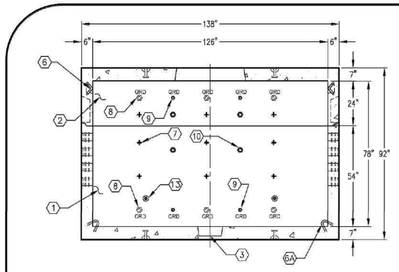

SECTION A–A

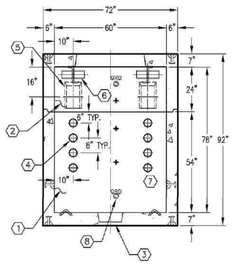

SECTION B–B

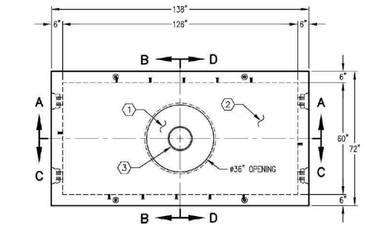

PLAN VIEW

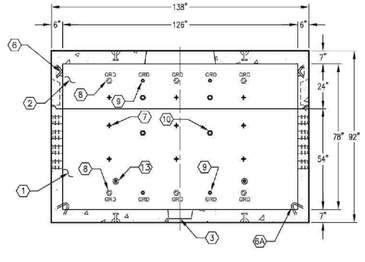

SECTION C–C

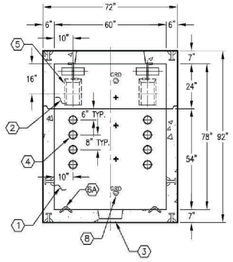

SECTION D–D

#	DATE	DESCRIPTION	BY

JENSEN PRECAST

K5106–FM78–13
PER VERIZON SPECS. GTS–8395

R-1750 Series
Telephone Design Large Manhole Frame, Solid Lid

Heavy Duty

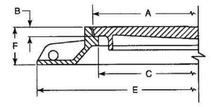



Illustrating R-1750-B

Furnished with machined horizontal and vertical bearing surfaces.

Covers can be bolted to frame with two pentagon head special monel security bolts upon request.



Wrenches available to fit special bolt at extra cost. Advise quantity required.

Dimensions in inches

Catalog No. Standard	Catalog No. Security Bolted	A	B	C	E	F	Anchor Bolt Circle*	Grate Alt.
R-1750-A	R-1750-AB	26	1 3/8	24	43	10		R-2300
R-1750-B	R-1750-BB	29	1 3/8	27	46	10	43-1/2	R-2290
R-1750-B1	R-1750-B1B	29	1 3/8	27	46	5 5/8	43-1/2	R-2290-A
R-1750-B2	R-1750-B2B	29	1 3/8	27	46	3 1/2	43-1/2	
R-1750-C	R-1750-CB	32	1 3/8	30	49	10	43-1/2	
R-1750-C1	R-1750-C1B	32	1 3/8	30	49	5 5/8	43-1/2	
R-1750-C1S	R-1750-C1SB	32	1 3/8	30	46	5 5/8	43-1/2	R-2750
R-1750-CS	R-1750-CSB	32	1 3/8	30	46	10	43-1/2	R-2255

* Furnished standard with four 1" diameter holes in base flange, equally spaced.

CLICK HERE to return to the Table of Contents

606272_UTUTILITY STRUCTURE TABLE).DWG Plotted on 9-Dec-2020 10:46 AM

UTILITY TABLE NOTES:

1. THIS LOCATION IS OUTSIDE OF THE SURVEY LIMITS. THE GROUND ELEVATION IS APPROXIMATE, CONTRACTOR TO PROVIDE GROUND ELEVATION.
2. DUE TO FUTURE WIDENING OF ROADWAY, TOP OF MANHOLE STRUCTURE TO BE 3.5 FT BELOW GUTTER ELEVATION OF WEST SIDE OF YARMOUTH ROAD. PROVIDE A RISER SECTION TO ATTAIN RIM ELEVATION SHOWN.
3. DUE TO FUTURE WIDENING OF ROADWAY, TOP OF HANDHOLES TO BE 3.5 FT BELOW GUTTER ELEVATION OF WEST SIDE OF YARMOUTH ROAD. GRADE TO EXPOSE TOP OF HANDHOLE.
4. THE GROUND ELEVATION NOTED IS THE SAME AS THE EXISTING GROUND ELEVATION.
5. ALL STATIONS AND OFFSETS ARE TO CENTER OF THE STRUCTURES.

TRANSFORMER PADS

NAME	BASELINE	STATION	OFFSET	GROUND ELEV.	REMARKS
PPT 1	ROUTE 28	107+84.77	79.67 L	34.97	SEE NOTE 4
PPT 2	YARMOUTH AND CAMP	206+21.21	82.66 L	35.07	SEE NOTE 4
PPT 3	YARMOUTH AND CAMP	206+99.36	53.68 R	35.74	SEE NOTE 4
PPT 4	YARMOUTH AND CAMP	200+81.17	292.23 L	33.92	SEE NOTE 4

SWITCHING ENCLOSURE

NAME	BASELINE	STATION	OFFSET	GROUND ELEV.	REMARKS
SE 1	YARMOUTH AND CAMP	215+57.07	32.04 R	33.24	SEE NOTE 4
SE 2	ROUTE 28	105+92.98	252.27 R	35.00	SEE NOTE 1
SE 3	YARMOUTH AND CAMP	203+35.59	47.40 L	35.11	
SE 4	YARMOUTH AND CAMP	203+30.39	51.72 L	34.84	

TEL HANDHOLE

NAME	BASELINE	STATION	OFFSET	GROUND ELEV.	REMARKS
TEL HH 1	YARMOUTH AND CAMP	215+46.55	18.11 R	32.39	SEE NOTE 4

CATV HANDHOLE

NAME	BASELINE	STATION	OFFSET	GROUND ELEV.	REMARKS
CATV HH 1	ROUTE 28	99+19.15	51.78 L	37.50	SEE NOTE 1
CATV HH 2	ENGINE HOUSE ROAD	501+63.11	64.67 R	35.17	SEE NOTE 4
CATV HH 3	ROUTE 28	107+90.77	43.37 R	35.67	
CATV HH 4	ROUTE 28	109+76.51	46.00 R	36.20	SEE NOTE 4
CATV HH 5	YARMOUTH AND CAMP	203+29.96	62.92 L	34.43	SEE NOTE 4
CATV HH 6	YARMOUTH AND CAMP	207+02.44	64.50 L	35.12	SEE NOTE 4
CATV HH 8	YARMOUTH AND CAMP	210+48.27	63.90 L	34.28	SEE NOTE 3 & 4
CATV HH 9	YARMOUTH AND CAMP	212+06.39	67.67 L	33.00	SEE NOTES 1 & 3
CATV HH 10	YARMOUTH AND CAMP	215+61.09	15.03 R	32.08	SEE NOTE 4

ELECTRIC HANDHOLE

NAME	BASELINE	STATION	OFFSET	GROUND ELEV.	REMARKS
EHH 1	ROUTE 28	102+39.71	55.02 L	36.01	
EHH 2	ROUTE 28	103+36.11	56.11 L	36.15	
EHH 3	ROUTE 28	107+84.77	85.67 L	35.07	SEE NOTE 4
EHH 4	ROUTE 28	109+53.43	87.18 L	34.62	SEE NOTE 4
EHH 5	ROUTE 28	109+54.14	79.84 L	34.68	
EHH 6	YARMOUTH AND CAMP	202+24.66	147.18 L	33.73	SEE NOTE 4
EHH 7	YARMOUTH AND CAMP	201+51.37	25.72 L	32.33	SEE NOTE 4
EHH 8	YARMOUTH AND CAMP	206+93.45	72.78 L	35.10	SEE NOTE 4
EHH 9	YARMOUTH AND CAMP	206+90.91	43.01 R	35.87	SEE NOTE 4
EHH 10	YARMOUTH AND CAMP	207+04.32	41.79 R	35.76	SEE NOTE 4
EHH 12	YARMOUTH AND CAMP	214+36.33	106.92 R	31.00	SEE NOTE 1
EHH 13	YARMOUTH AND CAMP	215+77.09	904.91 L	40.00	SEE NOTE 1

TEL MANHOLE

NAME	BASELINE	STATION	OFFSET	GROUND ELEV.	REMARKS
TMH 1	ROUTE 28	105+75.24	44.43 R	35.35	SEE NOTE 4
TMH 2	ROUTE 28	107+97.79	38.56 R	35.65	
TMH 3	ROUTE 28	109+83.89	41.56 R	35.66	
TMH 4	YARMOUTH AND CAMP	203+21.43	64.88 L	34.48	SEE NOTE 4
TMH 5	YARMOUTH AND CAMP	207+10.28	59.99 L	35.67	
TMH 6	YARMOUTH AND CAMP	210+40.50	59.39 L	34.21	SEE NOTE 2 & 4
TMH 7	YARMOUTH AND CAMP	211+96.25	61.91 L	33.00	SEE NOTES 1 & 2

CATV PEDESTALS

NAME	BASELINE	STATION	OFFSET	GROUND ELEV.	REMARKS
CATVP 1	ROUTE 28	102+43.41	62.84 L	36.09	SEE NOTE 4
CATVP 2	ROUTE 28	103+39.86	62.91 L	36.00	SEE NOTE 4
CATVP 3	ROUTE 28	107+79.60	79.36 L	34.99	SEE NOTE 4
CATVP 4	ROUTE 28	107+90.67	53.38 R	35.80	SEE NOTE 4
CATVP 5	YARMOUTH AND CAMP	202+26.52	146.29 L	33.78	SEE NOTE 4
CATVP 6	YARMOUTH AND CAMP	201+53.33	26.34 L	32.33	SEE NOTE 4
CATVP 7	YARMOUTH AND CAMP	206+92.73	46.85 R	35.94	SEE NOTE 4
CATVP 8	YARMOUTH AND CAMP	209+70.77	26.34 R	35.06	

TEL PEDESTALS

NAME	BASELINE	STATION	OFFSET	GROUND ELEV.	REMARKS
TELP 1	ROUTE 28	102+43.48	60.84 L	36.07	SEE NOTE 4
TELP 2	ROUTE 28	103+39.94	60.91 L	35.97	SEE NOTE 4
TELP 3	ROUTE 28	107+79.60	77.36 L	34.97	SEE NOTE 4
TELP 4	ROUTE 28	107+90.73	51.38 R	35.71	SEE NOTE 4
TELP 5	YARMOUTH AND CAMP	202+25.24	144.75 L	33.65	SEE NOTE 4
TELP 6	YARMOUTH AND CAMP	201+53.45	24.34 L	32.36	SEE NOTE 4
TELP 7	YARMOUTH AND CAMP	206+92.55	44.86 R	35.91	SEE NOTE 4

ELECTRIC MANHOLE

NAME	BASELINE	STATION	OFFSET	GROUND ELEV.	REMARKS
EMH 1	ROUTE 28	105+88.86	36.12 R	35.36	
EMH 2	ROUTE 28	107+84.31	33.67 R	35.48	
EMH 3	ROUTE 28	107+84.77	70.50 L	34.89	SEE NOTE 4
EMH 4	ROUTE 28	109+98.64	37.49 R	35.38	
EMH 5	YARMOUTH AND CAMP	200+74.31	284.73 L	33.82	SEE NOTE 4
EMH 6	YARMOUTH AND CAMP	203+27.04	41.69 L	35.45	
EMH 7	YARMOUTH AND CAMP	206+12.54	82.74 L	34.99	SEE NOTE 4
EMH 8	YARMOUTH AND CAMP	206+95.95	55.00 L	35.67	
EMH 9	YARMOUTH AND CAMP	206+97.62	43.63 R	35.81	SEE NOTE 4
EMH 10	YARMOUTH AND CAMP	210+53.92	54.43 L	34.00	SEE NOTES 1 & 2
EMH 11	YARMOUTH AND CAMP	212+09.75	56.92 L	33.00	SEE NOTES 1 & 2
EMH 12	YARMOUTH AND CAMP	215+57.06	23.29 R	33.40	SEE NOTE 4
EMH 13	ENGINE HOUSE ROAD	500+86.14	172.62 R	35.00	SEE NOTE 1

RAILROAD SIGNAL BRIDGE MAST, RAILROAD CANTILEVER AND TRAFFIC MAST FOUNDATIONS

NAME	BASELINE	STATION	OFFSET	NORTHING:	EASTING:	EX. GROUND ELEV.	PROP. GROUND ELEV.	TOP OF FOUNDATION ELEV.
F1 SIGNAL BRIDGE MAST	ROUTE 28	108+45.52	45.56 R	2703560.3360	990365.5769	35.57	35.19	35.50
F2 SIGNAL BRIDGE MAST	ROUTE 28	108+51.11	45.56 R	2703557.0780	990370.1111	35.44	35.14	35.50
F3 SIGNAL BRIDGE MAST	ROUTE 28	108+45.53	69.44 L	2703653.7246	990432.6856	35.80	35.30	35.50
F4 SIGNAL BRIDGE MAST	ROUTE 28	108+51.11	69.44 L	2703650.4666	990437.2198	35.29	35.30	35.50
F5 SIGNAL CANTILEVER	ROUTE 28	109+40.82	67.89 L	2703598.2241	990508.0779	35.25	35.39	35.70
F6 SIGNAL TRAFFIC MAST	ROUTE 28	108+14.24	45.17 R	2703578.9133	990340.3968	35.54	35.55	35.80

FOUNDATIONS FOR RAILROAD SIGNAL BRIDGE, RAILROAD CANTILEVER AND TRAFFIC SIGNAL TABLE (BO)

TRAFFIC HANDHOLES / PULL BOXES

NAME	BASELINE	STATION	OFFSET	GROUND ELEV.	REMARKS
THH 1	ROUTE 28	108+19.18	52.42 R	35.85	12 X 12 PULL BOX, SD2-031
THH 2	ROUTE 28	108+36.78	52.49 R	35.55	12 X 24 HANDHOLE, SD2-022
THH 3	ROUTE 28	109+53.82	53.92 R	35.28	12 X 24 HANDHOLE, SD2-022
THH 4	ROUTE 28	109+54.91	47.53 R	35.27	12 X 12 PULL BOX, SD2-031
THH 5	ROUTE 28	109+64.40	19.43 R	35.61	12 X 12 PULL BOX, SD2-031

TRAFFIC HANDHOLES / PULL BOXES TABLE (BO)

BARNSTABLE
IYANNOUGH RD (RTE 28) AND YARMOUTH RD

STATE	FED. AID PROJ. NO.	SHEET NO.	TOTAL SHEETS
MA	TAP/HSI/CMQ/STP/NFP(NI)-0035(043)	179	231
PROJECT FILE NO.	606272		

LIGHTING GENERAL NOTES AND SYMBOLS

606272_LT_COVER PAGE.DWG Plotted on 1-Dec-2020 2:22 PM

SYMBOLS

Light Info Block

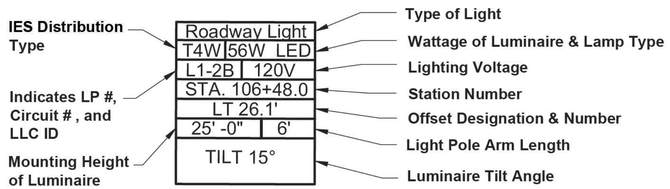

Roadway Light Pole

Electric Handhole (13" x 24" x 36")
SD2-022

Lighting Load Center (LLC)

3" PVC CONDUIT

GENERAL NOTES

1. The design of the roadway lighting system is for the intersection of Iyannough Road (Rte 28) and Yarmouth Road in the city of Barnstable.
2. The roadway lighting system shall include LED fixtures mounted on galvanized steel poles with 6 foot arms, electric handholes, and a conduit system.
3. Functional Classifications for the roadways are specified as a major (Rte 28) and a major (Yarmouth Rd) with a pedestrian area classification of medium along Rte 28 and medium along Yarmouth Rd. Therefore the maintained luminance average shall be not less than 0.9 cd/sq. m for Route 28 and 0.9 cd/sq. m for Yarmouth Road and the uniformity ratio shall be no more than 3 (avg/min).
4. Reference MassDOT Standard Specification Section 820 for furnishing and installing Roadway Lighting.
5. Conduit runs are shown approximate. Locations may be adjusted to match existing and proposed conditions as directed by the resident engineer.
6. All wiring in the Handholes, Panelboards, and Cabinets shall be permanently labeled and neatly installed.
7. All conduit and equipment to be installed and grounded in accordance with the latest edition of the National Electric Code (NEC), Massachusetts electrical code and applicable local codes.
8. All equipment and materials shall be UL Listed for its intended purpose.
9. Wire size shall be based on American Wire Gage (AWG), as applied to copper conductors. The conductor insulation shall be type USE-2 or RHH-RHW-2, Type 8 Direct Burial.
10. All wires shall be continuous from Handhole to Handhole without running splices in conduits. All wires shall extend 24" above the Handhole, connected at ends and rolled back into the Handhole.
11. Splices shall be in accordance with section 813 of the MassDOT Standard Specifications.
12. The Hot Line and Neutral connection in the pole base shall be with an approved breakaway street light fuse connector.
13. Utilities including drainage, sewer, water, gas, telecommunications and electrics are shown for reference only; see utility sheets and drainage sheets for details.
14. The locations of existing subsurface utilities shown on the plans were compiled from available record drawings and are not warranted to be correct. The locations are approximate only and in some cases may be incomplete. The contractor shall notify all agencies required and verify the location of all existing subsurface utilities prior to performing any work.
15. All splices in Handholes shall be made with waterproof molds similar to CMS/ESP Utility Products Cat. #SSBC350-4S.
16. Wire and cable furnished and installed shall be new. Wire and cable shall be protected from weather and damage during storage and handling.
17. No wire shall be drawn in to any conduit until all work which may cause cable damage is complete.
18. The contractor shall carefully mark the proposed location of the concrete foundation and then shall determine if any utilities, or underground or overhead obstruction will prevent the installation at this location. Similar marking shall be done for the conduit runs to the foundation. If such an obstruction is evident, the contractor shall request permission from the engineer to move or adjust the location of the foundation.
19. The contractor shall perform the work in a manner acceptable to the engineer so that interference with or inconvenience to business concerns or abutters on account of the construction work is kept to a minimum. The contractor shall maintain safe and reasonable access to and egress from abutting properties at all times.
20. The contractor shall be required to adhere to all regulations imposed by the city of Barnstable.
21. Electrical service to the Lighting Load Center (LLC) will be provided by Eversource. Contractor shall provide conduit and wire to utility handhole with enough slack for service connection. Contractor shall coordinate with Eversource for service connection. Contractor is responsible for all electric service connection and related fees from Eversource.
22. Install the photocell electric switch on the closest adjacent light pole. Coordinate the location with the photocell eye aimed in the northwest direction.
23. Unless otherwise noted, 3" PVC Schedule 80 conduit shall be used throughout the project area.
24. The contractor shall maintain areas in and around the work zone free and clear of debris at all times. No stock piling of equipment or material shall be permitted outside of fixed work zones.
25. All Light Poles that are not behind a guardrail shall have a Breakaway Coupling. The Breakaway Coupling shall be FHWA approved.
26. Reference the Commonwealth of Massachusetts, Department of Public Works, Standard Drawings for Traffic Signals and Highway Lighting, 1968.
27. Follow pole manufacturer's standard provisions for protecting pole finishes during transport, storage and installation. Do not store poles on ground. Store poles so they are at least 12 in above ground level and growing vegetation. Do not remove factory-applied pole wrappings until just before installing pole.
28. Materials and equipment shall be in accordance with NEC, UL, ANSI and as shown on the drawings and specified.

LIGHTING DRAWING INDEX

SHEET 179 LIGHTING GENERAL NOTES AND SYMBOLS
SHEET 180 LIGHTING PLAN 1
SHEET 181 LIGHTING PLAN 2
SHEET 182 LIGHTING PLAN 3
SHEET 183 LIGHTING PLAN 4
SHEET 184 LIGHTING PLAN 5
SHEET 185 LIGHTING PLAN 6
SHEET 186 CALCULATION INDEX
SHEET 187 PANEL SCHEDULES
SHEET 188 LIGHTING DETAILS 1
SHEET 189 LIGHTING DETAILS 2
SHEET 190 LIGHTING DETAILS 3
SHEET 191 LIGHTING DETAILS 4

BARNSTABLE
IYANNOUGH RD (RTE 28) AND YARMOUTH RD

STATE	FED. AID PROJ. NO.	SHEET NO.	TOTAL SHEETS
MA	TAP/HSI/CMQ/STP/NFP(N/I)-0035(043)	180	231
PROJECT FILE NO.	606272		

LIGHTING PLANS
SHEET 1 OF 6

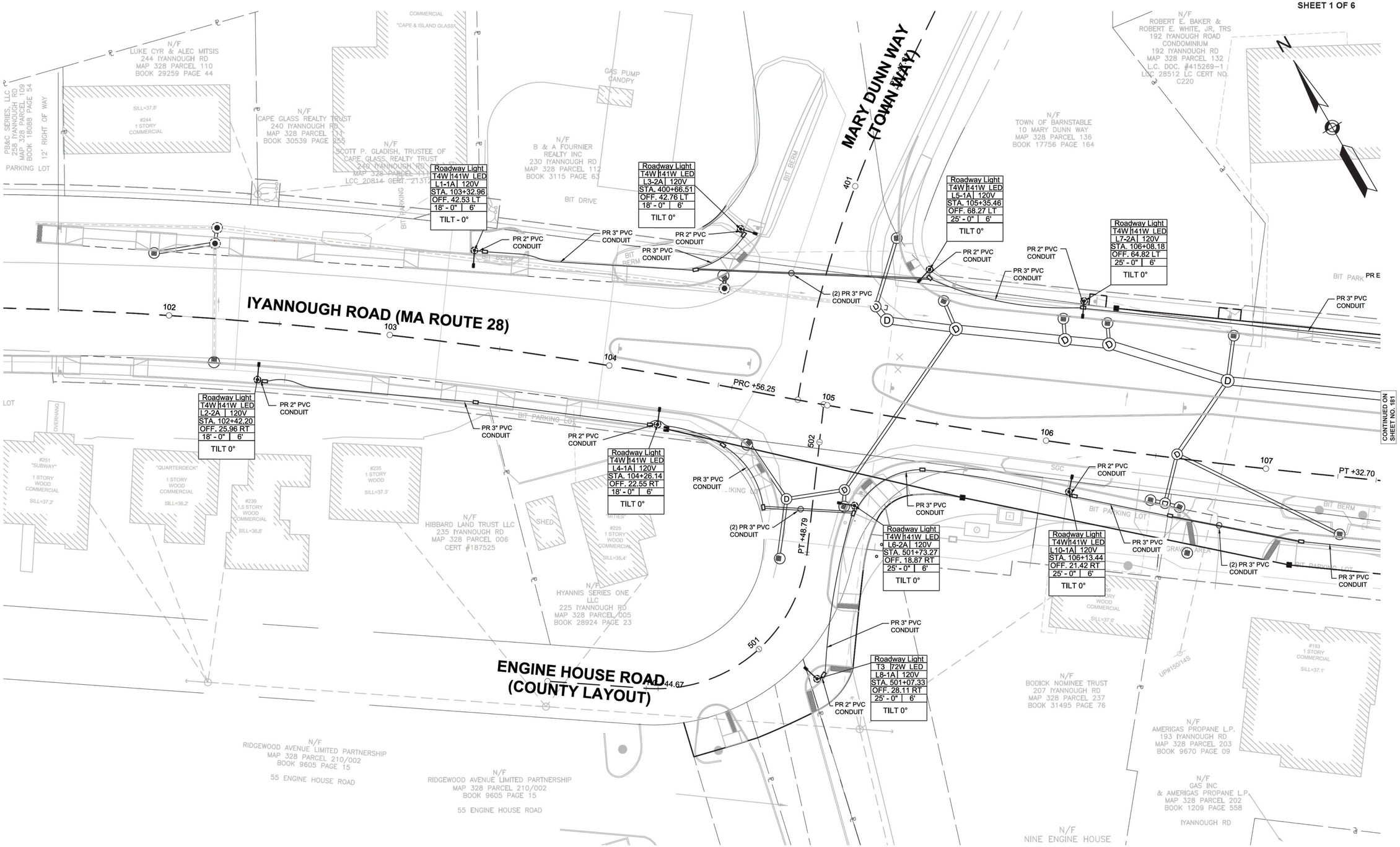

606272_LT_LIGHTING PLANS.DWG Plotted on 10-Apr-2021 2:20 PM

BARNSTABLE
IYANNOUGH RD (RTE 28) AND YARMOUTH RD

STATE	FED. AID PROJ. NO.	SHEET NO.	TOTAL SHEETS
MA	TAP/HSI/CMQ/STP/NFP(N/I)-0035(043)	181	231
PROJECT FILE NO.	606272		

LIGHTING PLANS
SHEET 2 OF 6

606272_LT_LIGHTING PLANS.DWG Plotted on 10-Apr-2021 2:21 PM

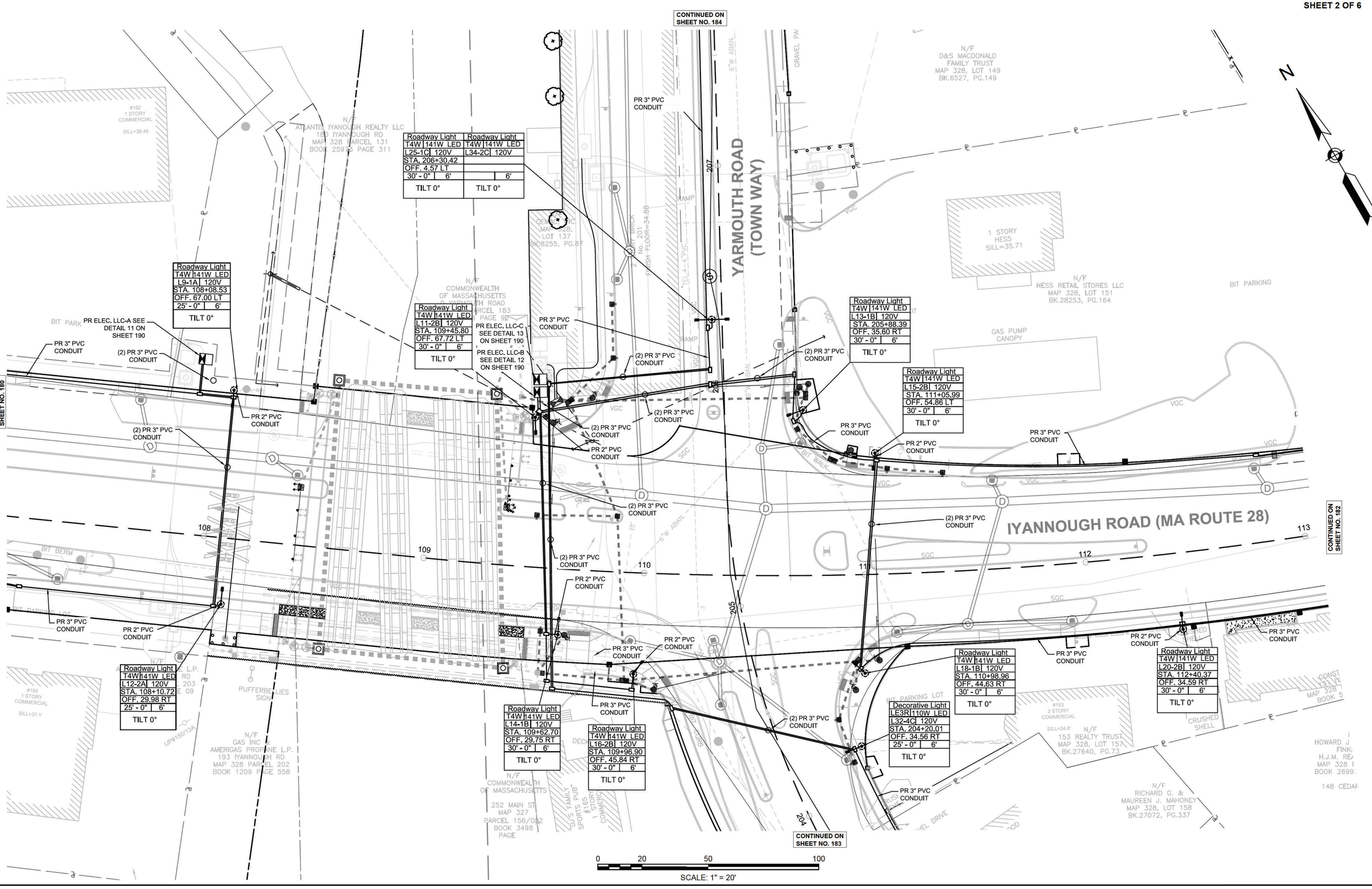

BARNSTABLE
IYANNOUGH RD (RTE 28) AND YARMOUTH RD

STATE	FED. AID PROJ. NO.	SHEET NO.	TOTAL SHEETS
MA	TAP/HSI/CMQ/STP/NFP(N/I)-0035(043)	182	231
PROJECT FILE NO.	606272		

LIGHTING PLANS
SHEET 3 OF 6

606272_LT_LIGHTING PLANS.DWG Plotted on 10-Apr-2021 2:22 PM

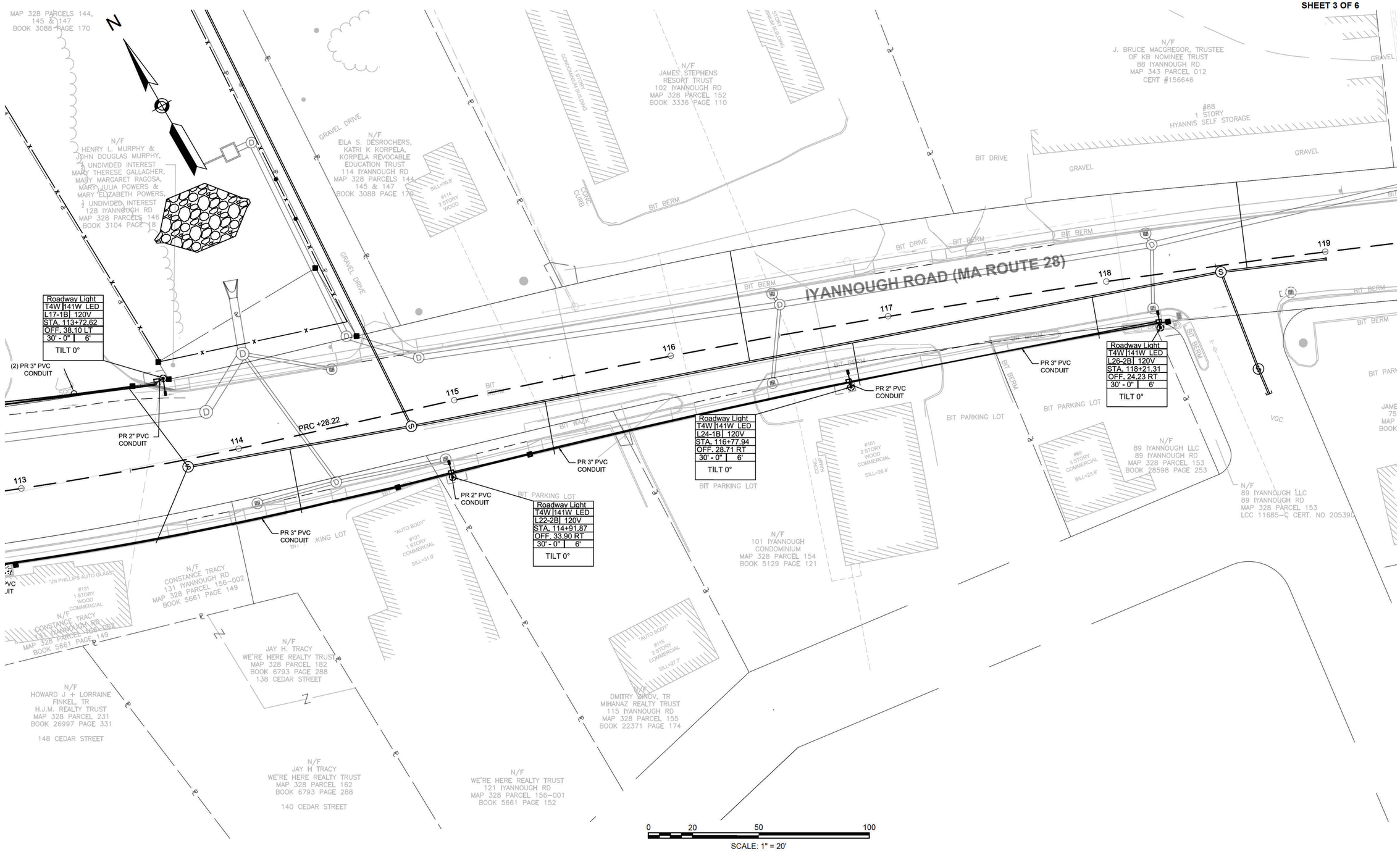

BARNSTABLE
IYANNOUGH RD (RTE 28) AND YARMOUTH RD

STATE	FED. AID PROJ. NO.	SHEET NO.	TOTAL SHEETS
MA	TAP/HSI/CMQ/STP/NFP(N/I)-0035(043)	183	231
PROJECT FILE NO.	606272		

LIGHTING PLANS
SHEET 4 OF 6

606272_LT_LIGHTING PLANS.DWG Plotted on 10-Apr-2021 2:23 PM

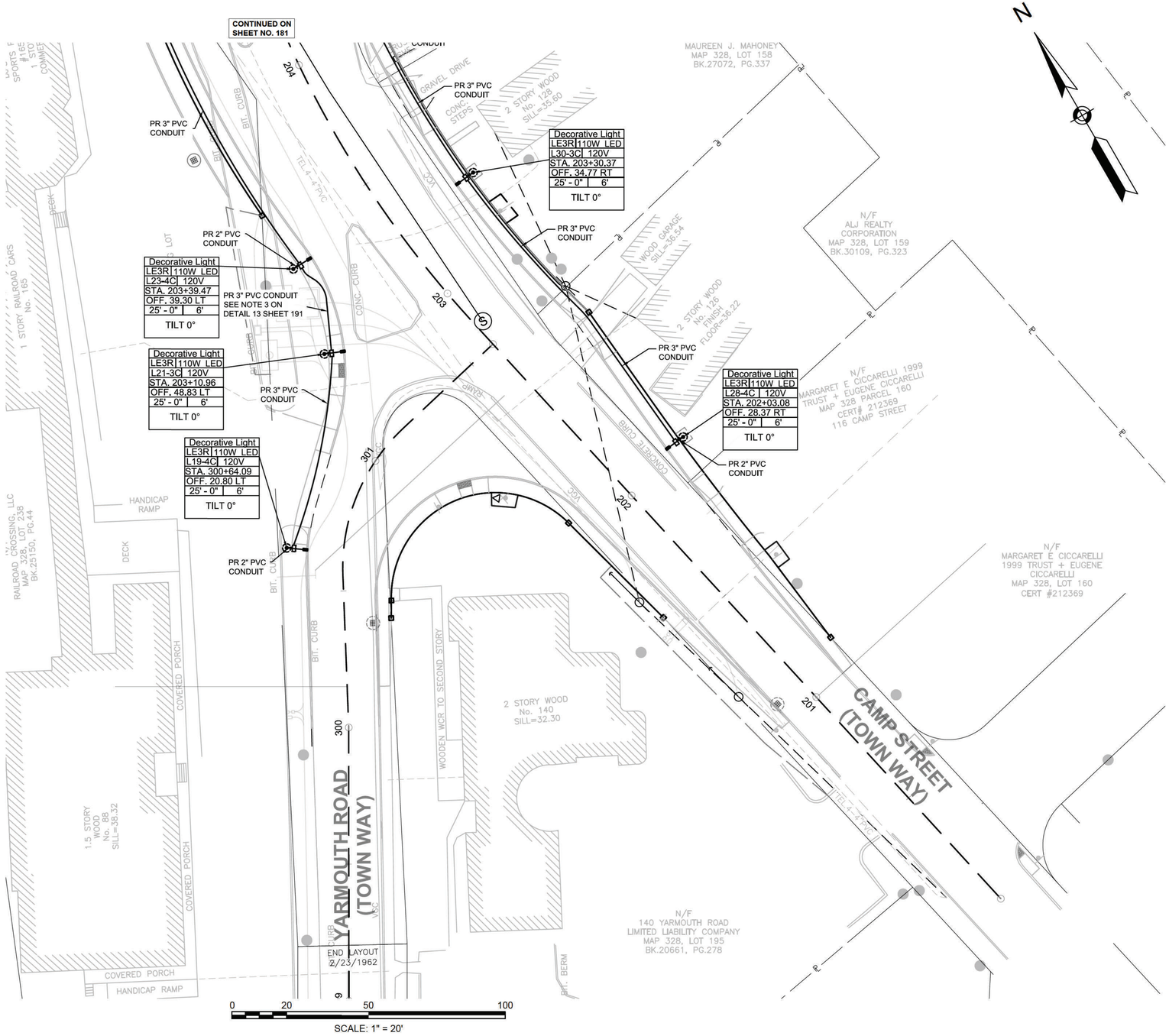

BARNSTABLE
IYANNOUGH RD (RTE 28) AND YARMOUTH RD

STATE	FED. AID PROJ. NO.	SHEET NO.	TOTAL SHEETS
MA	TAP/HSI/CMQ/STP/NFP(N/I)-0035(043)	184	231
PROJECT FILE NO.	606272		

LIGHTING PLANS
SHEET 5 OF 6

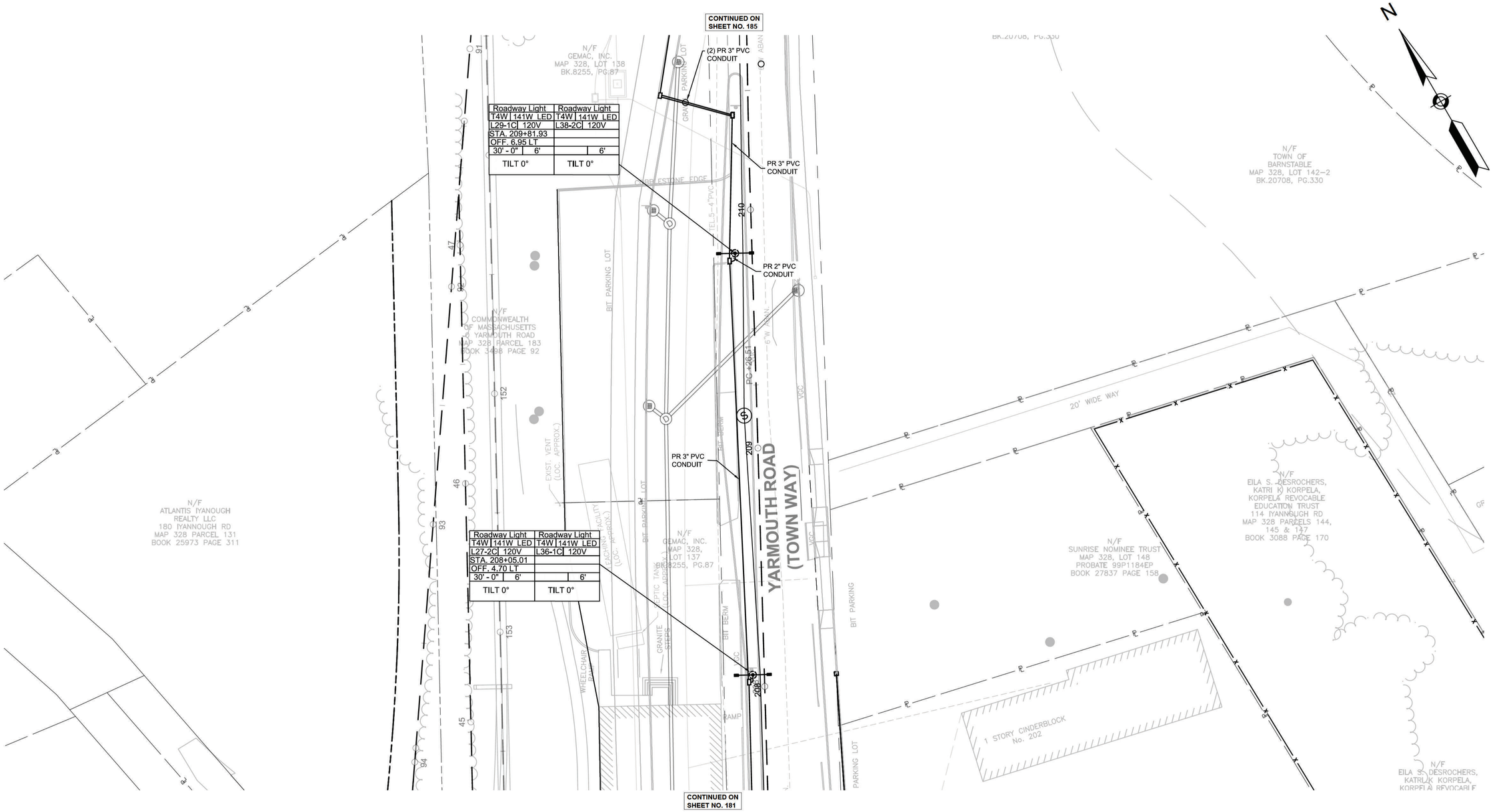

606272_LT_LIGHTING PLANS.DWG Plotted on 10-Apr-2021 2:24 PM

BARNSTABLE
IYANNOUGH RD (RTE 28) AND YARMOUTH RD

STATE	FED. AID PROJ. NO.	SHEET NO.	TOTAL SHEETS
MA	TAP/HSI/CMQ/STP/NFP(N/I)-0035(043)	185	231
PROJECT FILE NO.	606272		

LIGHTING PLANS
SHEET 6 OF 6

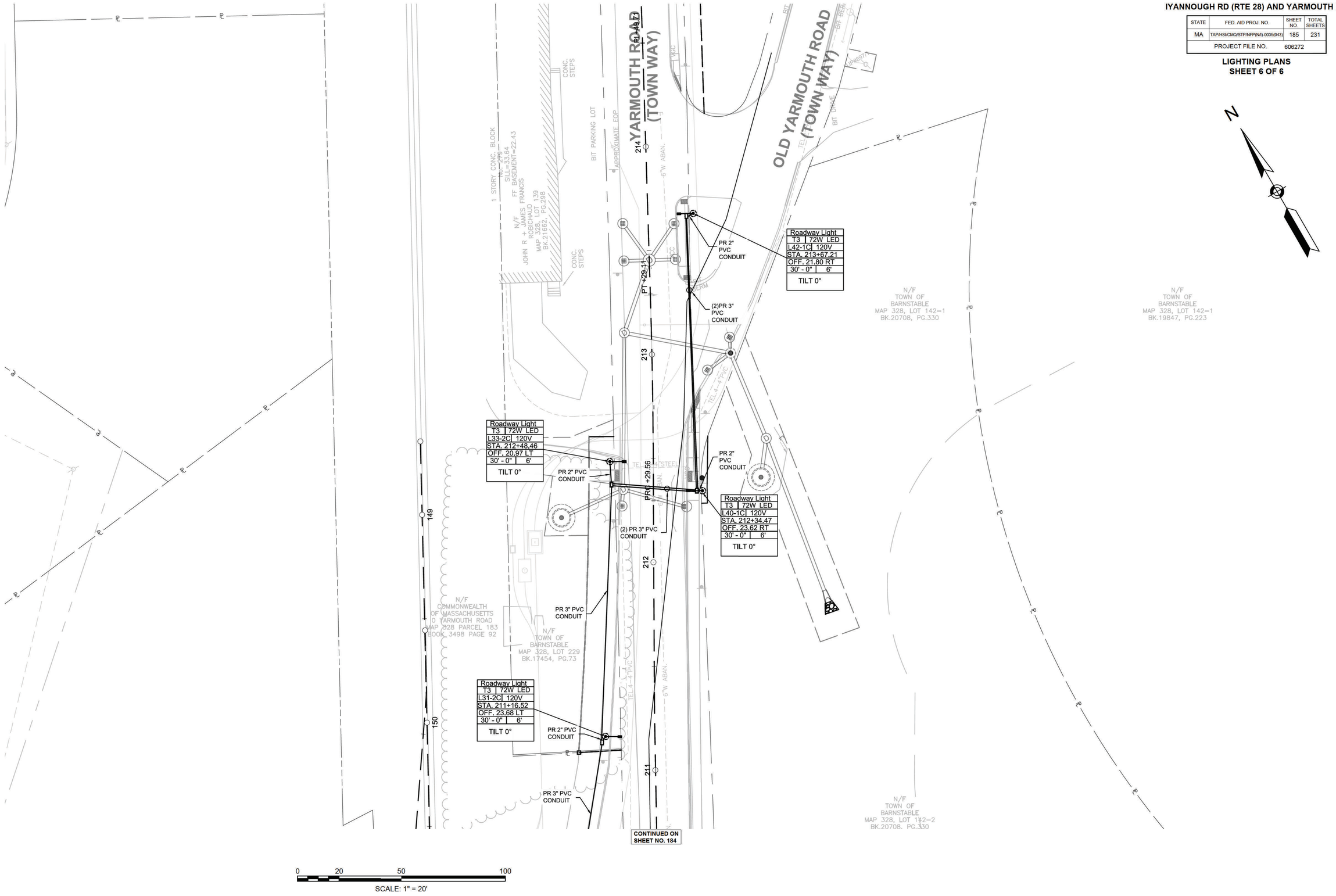

606272_LT_LIGHTING PLANS.DWG Plotted on 10-Apr-2021 2:25 PM

BARNSTABLE
IYANNOUGH RD (RTE 28) AND YARMOUTH RD

STATE	FED. AID PROJ. NO.	SHEET NO.	TOTAL SHEETS
MA	TAP/HSI/CMQ/STP/NFP(N1)-0035(043)	186	231
PROJECT FILE NO.	606272		

LIGHTING DETAILS
CALCULATION INDEX

606272_LT_CALC INDEX.DWG Plotted on 30-Oct-2020 12:45 PM

Luminaire Schedule							
QTY	Arrangement	Lumens	LLF	Description	Arm Length	Lum. Watts	Light Distribution
5	SINGLE	7693	0.89	ROADWAY LIGHT	6	72	T3
21	SINGLE	16903	0.89	ROADWAY LIGHT	6	141	T4W
3	TWIN	16903	0.89	ROADWAY LIGHT	6	141	T4W
6	SINGLE	9994	0.89	DECORATIVE LIGHT	6	110	LE3R

Calculation Summary								
Calc Zone #	Label	Units	Avg	Max	Min	Avg/Min	Max/Min	Veiling Luminance
1	Aviation & Rte 28 Intersection	Fc	2.37	3.4	1.3	1.82	2.62	-
2	Aviation Rd Intersection	Fc	1.65	2.4	0.7	2.36	3.43	-
3	Camp St Intersection	Fc	2.4	5.3	0.9	2.64	5.89	-
4	Rte 28 Intersection	Fc	2.76	3.6	2	1.38	1.80	-
5	Yarmouth North Crosswalk	Fc	2	2.1	1.8	1.11	1.17	-
6	Rte 28 EB Luminance	Cd/Sq.m	1.1	4.4	0.5	2.20	8.80	0.26
7	Rte 28 WB Luminance	Cd/Sq.m	1.09	3.8	0.5	2.18	7.60	0.2
8	Rte 28 EB-1 Luminance	Cd/Sq.m	1.14	2.7	0.5	2.28	5.40	0.13
9	Rte 28 WB-1 Luminance	Cd/Sq.m	1	1.8	0.6	1.67	3.00	0.18
10	Rte 28 EB-2 Luminance	Cd/Sq.m	0.9	2.3	0.5	1.68	4.60	0.23
11	Rte 28 WB-2 Luminance	Cd/Sq.m	0.9	2.3	0.5	1.70	4.60	0.13
12	Rte 28 EB-3 Luminance	Cd/Sq.m	1.16	2.2	0.5	2.32	4.40	0.11
13	Rte 28 WB-3 Luminance	Cd/Sq.m	0.9	2.3	0.5	1.70	4.60	0.14
14	Yarmouth NB Luminance	Cd/Sq.m	1.26	3.5	0.5	2.52	7.00	0.22
15	Yarmouth NB-2 Luminance	Cd/Sq.m	0.99	1.3	0.5	1.98	2.60	0.06
16	Yarmouth SB Luminance	Cd/Sq.m	1.1	3.2	0.5	2.20	6.40	0.12
17	Yarmouth SB-2 Luminance	Cd/Sq.m	1.1	1.5	0.6	1.83	2.50	0.09
18	Camp St NB	Cd/Sq.m	1.54	2	0.9	1.71	2.22	0.08
19	Camp St SB	Cd/Sq.m	1.18	2	0.5	2.36	4.00	0.23

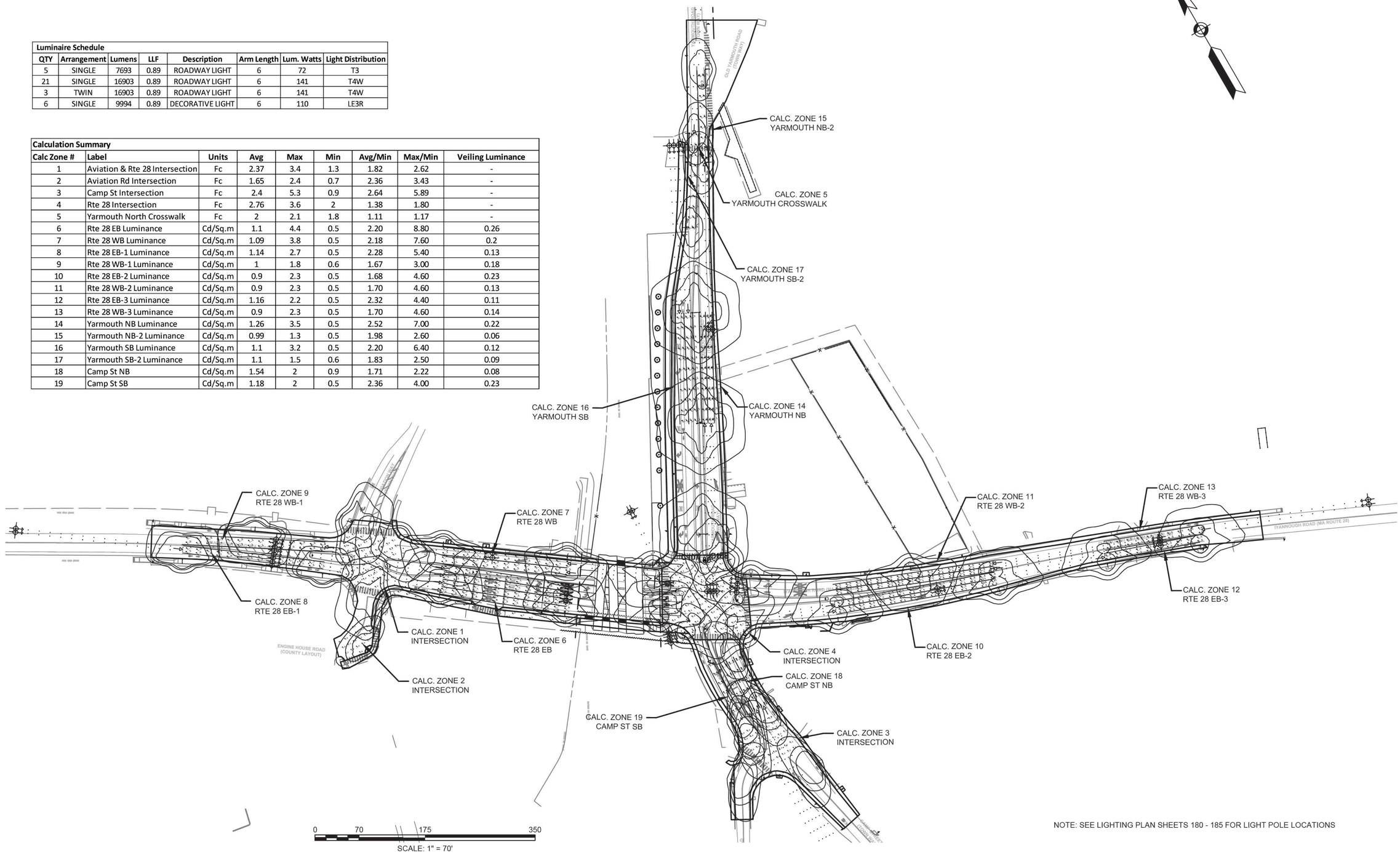

NOTE: SEE LIGHTING PLAN SHEETS 180 - 185 FOR LIGHT POLE LOCATIONS

BARNSTABLE
IYANNOUGH RD (RTE 28) AND YARMOUTH RD

STATE	FED. AID PROJ. NO.	SHEET NO.	TOTAL SHEETS
MA	TAP/HSI/CMQ/STP/NFP(N1)-0035(043)	187	231
PROJECT FILE NO.	606272		

PANEL SCHEDULES

PANEL DESIGNATION LLC-A	TYPE, SQUARE D	VOLTAGE: 240/120V
	NUMBER OF SINGLE POLES: 24	PANEL MOUNTING: SURFACE INSIDE LLC-A CABINET
	MAIN BUS RATING: 100 AMPS	PANEL ENCLOSURE (NEMA):
	MAIN CIRCUIT BREAKER: 100A	PANEL MIN, A.I.C. RATING: 22,000 AIC
	LOCATION IYANNOUGH ROAD (MA ROUTE 28)	

SPACE NO.	CKT BKR.	DESCRIPTION	LOAD-KW A	LOAD-KW B	DESCRIPTION	CKT BKR.	SPACE NO.
1	20/1	ROADWAY LIGHTING CKT-1	0.777	0.705	ROADWAY LIGHTING CKT-2	20/1	2
3	20/2	LLC EXHAUST FAN & HEATER	0.53		TIME CLOCK	20/1	4
5					SPARE		6
7	20/1	LIGHT & OUTLET		0.014	SPARE		8
9		SPARE			SPARE		10
11		SPARE			SPARE		12
13		SPARE			SPARE		14
15		SPARE			SPARE		16
17		SPARE			SPARE		18
19		SPARE			SPARE		20
21		SPARE			SPARE		22
23		SPARE			SPARE		24
		TOTAL kW	1.307	0.719			

PANEL CONNECTED LOAD (KW)

A	1.307			
B	0.719			
A&B	0.53			
	2.556	kW Total	10.65 A	Demand Load

1 "LLC-A" PANEL SCHEDULE
SCALE: N.T.S

PANEL DESIGNATION LLC-B	TYPE, SQUARE D	VOLTAGE: 240/120V
	NUMBER OF SINGLE POLES: 24	PANEL MOUNTING: SURFACE INSIDE LLC-B CABINET
	MAIN BUS RATING: 100 AMPS	PANEL ENCLOSURE (NEMA):
	MAIN CIRCUIT BREAKER: 100A	PANEL MIN, A.I.C. RATING: 22,000 AIC
	LOCATION IYANNOUGH ROAD (MA ROUTE 28)	

SPACE NO.	CKT BKR.	DESCRIPTION	LOAD-KW A	LOAD-KW B	DESCRIPTION	CKT BKR.	SPACE NO.
1	20/1	ROADWAY LIGHTING CKT-1	0.705	0.705	ROADWAY LIGHTING CKT-2	20/1	2
3		SPARE			SPARE		4
5		SPARE			SPARE		6
7	20/2	LLC EXHAUST FAN & HEATER	0.53		TIME CLOCK	20/1	8
9					SPARE		10
11	20/1	LIGHT & OUTLET		0.014	SPARE		12
13		SPARE			SPARE		14
15		SPARE			SPARE		16
17		SPARE			SPARE		18
19		SPARE			SPARE		20
21		SPARE			SPARE		22
23		SPARE			SPARE		24
		TOTAL kW	1.235	0.719			

PANEL CONNECTED LOAD (KW)

A	1.235			
B	0.719			
A&B	0.53			
	2.484	kW Total	10.35 A	Demand Load

2 "LLC-B" PANEL SCHEDULE
SCALE: N.T.S

PANEL DESIGNATION LLC-C	TYPE, SQUARE D	VOLTAGE: 240/120V
	NUMBER OF SINGLE POLES: 24	PANEL MOUNTING: SURFACE INSIDE LLC-C CABINET
	MAIN BUS RATING: 100 AMPS	PANEL ENCLOSURE (NEMA):
	MAIN CIRCUIT BREAKER: 100A	PANEL MIN, A.I.C. RATING: 22,000 AIC
	LOCATION IYANNOUGH ROAD (MA ROUTE 28)	

SPACE NO.	CKT BKR.	DESCRIPTION	LOAD-KW A	LOAD-KW B	DESCRIPTION	CKT BKR.	SPACE NO.
1	20/1	ROADWAY LIGHTING CKT-1	0.705	0.705	ROADWAY LIGHTING CKT-2	20/1	2
3	20/1	ROADWAY LIGHTING CKT-3	0.42	0.21	ROADWAY LIGHTING CKT-4	20/1	4
5		SPARE			SPARE		6
7	20/2	LLC EXHAUST FAN & HEATER	0.53		TIME CLOCK	20/1	8
9					SPARE		10
11	20/1	LIGHT & OUTLET		0.014	SPARE		12
13		SPARE			SPARE		14
15		SPARE			SPARE		16
17		SPARE			SPARE		18
19		SPARE			SPARE		20
21		SPARE			SPARE		22
23		SPARE			SPARE		24
		TOTAL kW	1.655	0.929			

PANEL CONNECTED LOAD (KW)

A	1.655			
B	0.929			
A&B	0.53			
	3.114	kW Total	12.98 A	Demand Load

3 "LLC-C" PANEL SCHEDULE
SCALE: N.T.S

NOTE:

1.) Contractor shall provide meter socket and wire into panel prior to contacting Eversource for meter connection.

606272_LT_SINGLE LINE DIAGRAM.DWG Plotted on 30-Oct-2020 12:45 PM

BARNSTABLE
IYANNOUGH RD (RTE 28) AND YARMOUTH RD

STATE	FED. AID PROJ. NO.	SHEET NO.	TOTAL SHEETS
MA	TAP/HSI/CMQ/STP/NFP(N/I)-0035(043)	188	231
PROJECT FILE NO.	606272		

LIGHTING DETAILS
SHEET 1 OF 4

606272_LT_LIGHTING DETAILS.DWG Plotted on 30-Oct-2020 12:46 PM

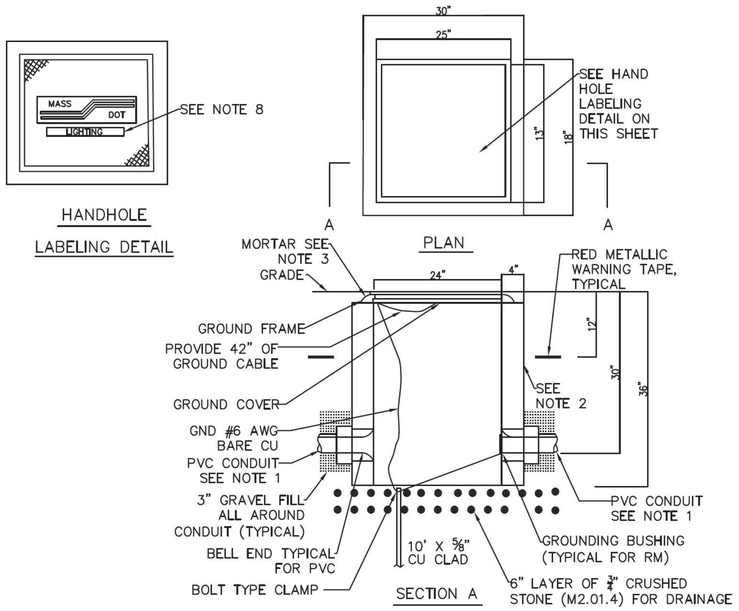

1 13"x24"x36" SD2-022 HANDHOLE
SCALE: N.T.S

ELECTRIC HANDHOLE GENERAL NOTES:

1. ALL CONDUIT ENTERING HANDHOLES SHALL EXTEND INTO THE HANDHOLE CAVITY BY AT LEAST 2".
2. ALL HANDHOLES SHALL BE PRECAST CONCRETE, AND SHALL BE FREE OF CRACKS OR OTHER DEFECTS. CONCRETE FOR PRECAST CONCRETE HANDHOLES SHALL BE 5000 PSI, 3/8 IN., 660 CEMENT CONCRETE MASONRY.
3. CAST IRON FRAME SHALL BE MORTARED TO THE SURFACE OF THE PRECAST HANDHOLE.
4. ALL CONDUIT INSTALLED IN HANDHOLES SHALL BE INSTALLED IN KNOCKOUTS PROVIDED IN THE BOX AND NO EXCESS KNOCKOUTS SHALL BE MADE. THE KNOCKOUTS ARE DESIGNED TO BE MADE PRIOR TO BACKFILLING AROUND THE HANDHOLES. AFTER THE CONDUIT HAS BEEN INSTALLED IN THE HANDHOLE, THE OPEN SPACE BETWEEN THE BOX AND THE CONDUIT WILL BE SEALED WITH CLASS B CEMENT CONCRETE MASONRY. AND CONDUIT INSTALLED IN SUCH A MANNER AS TO BLOCK COMPLETE. ACCESS TO ANY OTHER CONDUIT SHALL BE REMOVED AND RESET.
5. FOR THE EXACT NUMBER, SIZE, AND ORIENTATION OF THE CONDUITS ENTERING THE HANDHOLE, SEE PLAN SHEETS.
6. CAST IRON HANDHOLE COVERS AND FRAMES SHALL BE PRODUCED BY THE SAME MANUFACTURERS AND IN ACCORDANCE WITH MASSACHUSETTS DEPARTMENT OF TRANSPORTATION STANDARD SPECIFICATIONS.
7. METAL HANDHOLE COVER AND FRAME ARE TO BE BONDED (GROUNDED). DRILL AND TAP FRAME FOR MECHANICAL GROUND LUG CONNECTION. INSTALL A POST TOP SERVIT GROUNDING CONNECTOR SUITABLE TO ACCOMMODATE ONE BARE #6 CONDUCTOR. EXTEND #6 GROUND CONDUCTOR THROUGH FRAME LUG TO BOND COVER. PROVIDE 42" OF SLACK FROM FRAME LUG TO BOND COVER. EXOTHERMICALLY WELD GROUND CONDUCTOR TO COVER.
8. FUNCTION DESIGNATION ON THE HANDHOLE SHALL BE LABELED AS FOLLOWS PER NEC ARTICLE 314.30D:

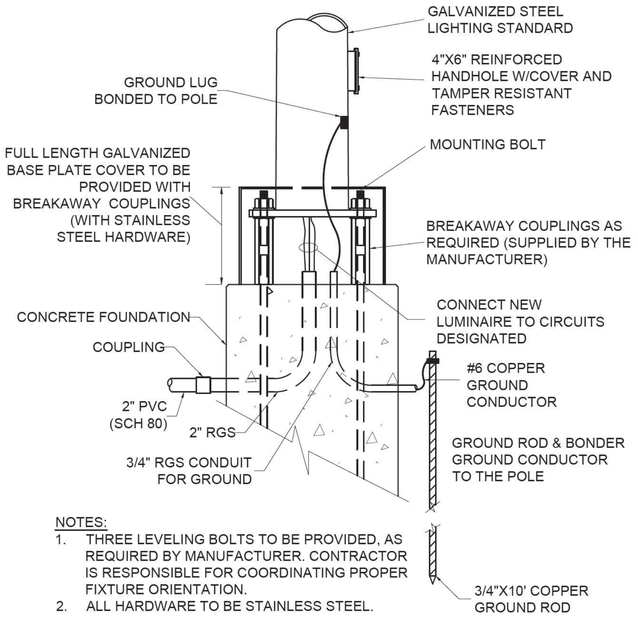

NOTES:
1. THREE LEVELING BOLTS TO BE PROVIDED, AS REQUIRED BY MANUFACTURER. CONTRACTOR IS RESPONSIBLE FOR COORDINATING PROPER FIXTURE ORIENTATION.
2. ALL HARDWARE TO BE STAINLESS STEEL.

2 ROADWAY LIGHTING POLE BREAKAWAY BASE DETAIL
SCALE: N.T.S

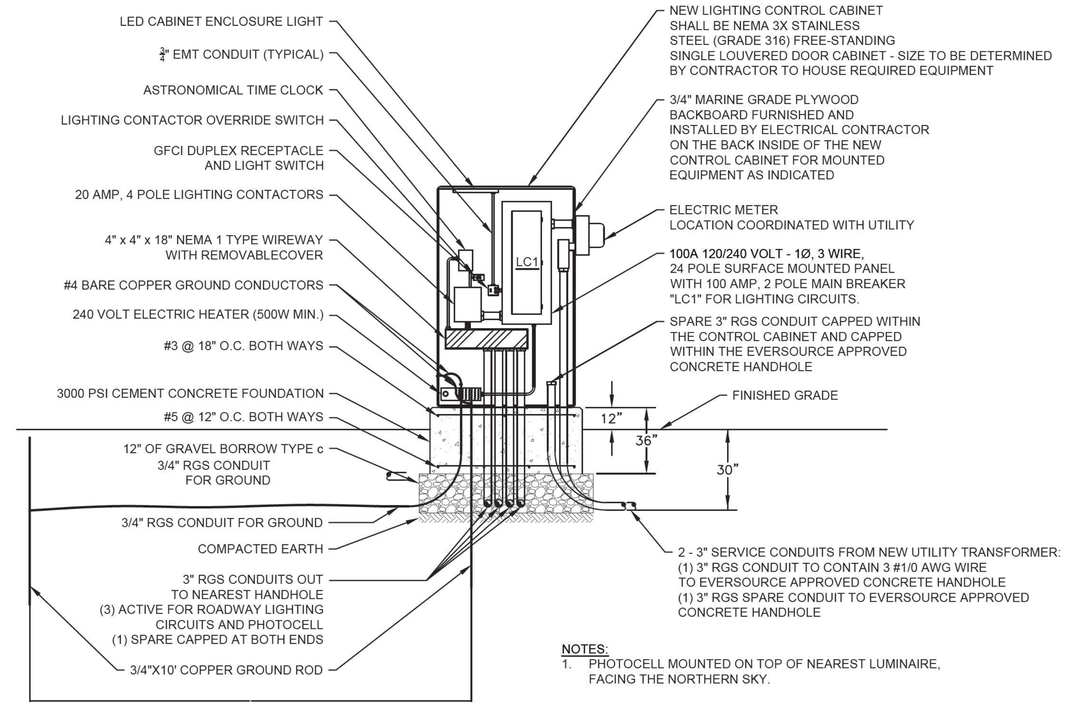

NOTES:
1. PHOTOCELL MOUNTED ON TOP OF NEAREST LUMINAIRE, FACING THE NORTHERN SKY.

3 LIGHTING LOAD CENTER DETAIL
SCALE: N.T.S

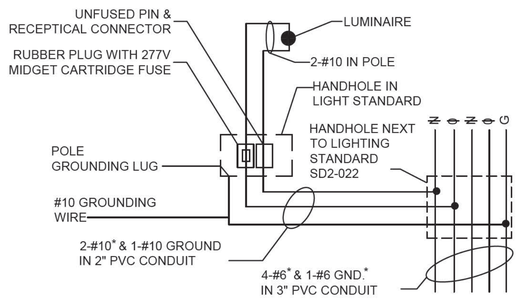

* = UNLESS OTHERWISE NOTED ON PLANS

4 WIRING DIAGRAM FOR SINGLE ARM HIGHWAY LUMINAIRE
SCALE: N.T.S

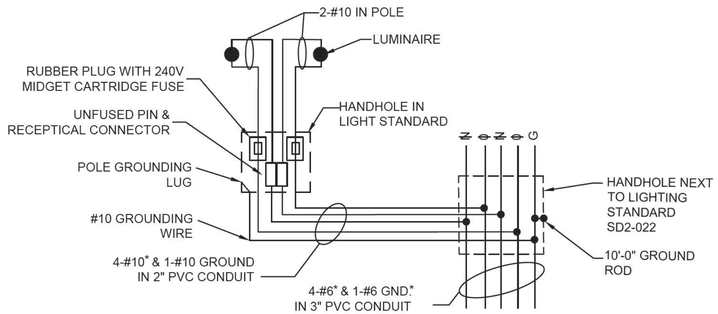

* = UNLESS OTHERWISE NOTED ON PLANS

5 WIRING DIAGRAM FOR DUAL ARM HIGHWAY LUMINAIRE
SCALE: N.T.S

BARNSTABLE
IYANNOUGH RD (RTE 28) AND YARMOUTH RD

STATE	FED. AID PROJ. NO.	SHEET NO.	TOTAL SHEETS
MA	TAP/HSI/CMQ/STP/NFP(NI)-0035(043)	189	231
PROJECT FILE NO.	606272		

LIGHTING DETAILS
SHEET 2 OF 4

606272_LT_LIGHTING DETAILS.DWG Plotted on 30-Oct-2020 12:46 PM

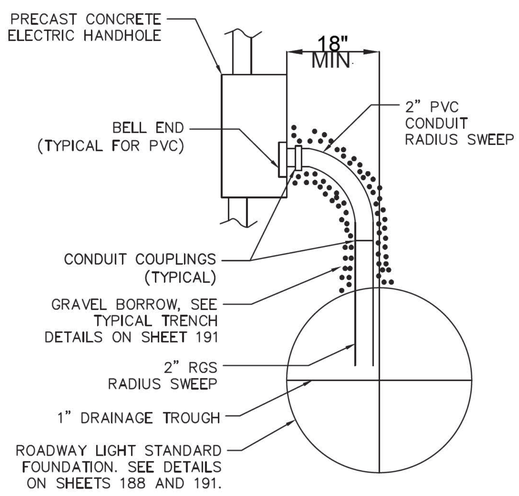

ADJACENT TO SUP PLAN

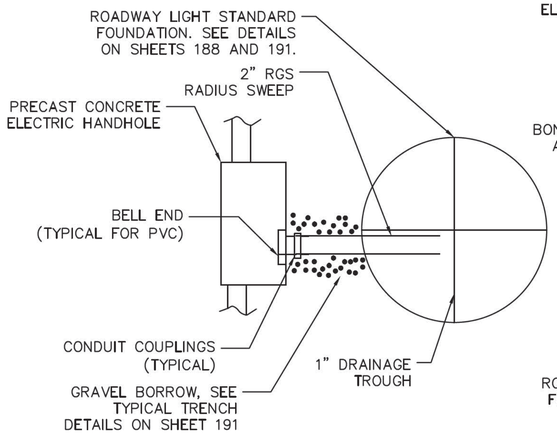

IN FRONT OF SIDEWALK PLAN

6 LIGHTING HAND HOLE AT POLE BASE
SCALE: N.T.S

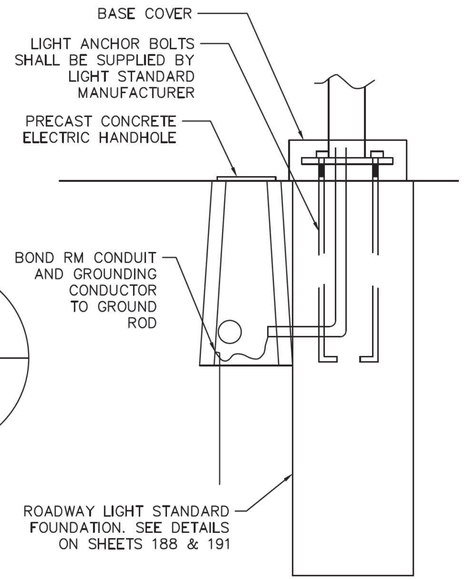

ELEVATION

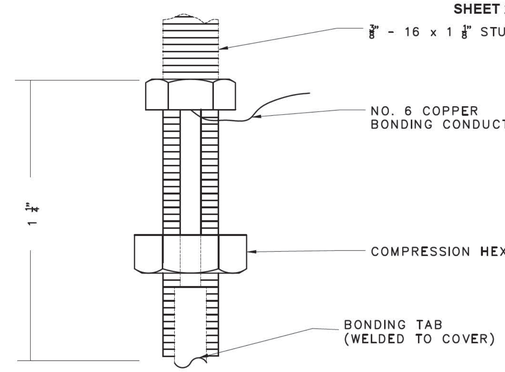

NOTES:
1. BONDING POST CONNECTOR SHALL BE LONG STUD TYPE WHICH WILL ACCOMMODATE A DOUBLE CONDUCTOR INSTALLATION.
2. ATTACH 3 FOOT LENGTH OF NO.6 COPPER BONDING CONDUCTOR FROM BONDING POST CONNECTOR INSTALLED ON COVER TO BONDING POST CONNECTOR INSTALLED ON FRAME.
3. ATTACH FREE END OF BONDING CONDUCTOR ROUTED THROUGH CONDUIT SYSTEM TO BONDING POST CONNECTOR INSTALLED ON THE FRAME.
4. LUG SHALL BE EITHER COPPER OR BRASS.

7 BONDING LUG DETAIL
SCALE: N.T.S

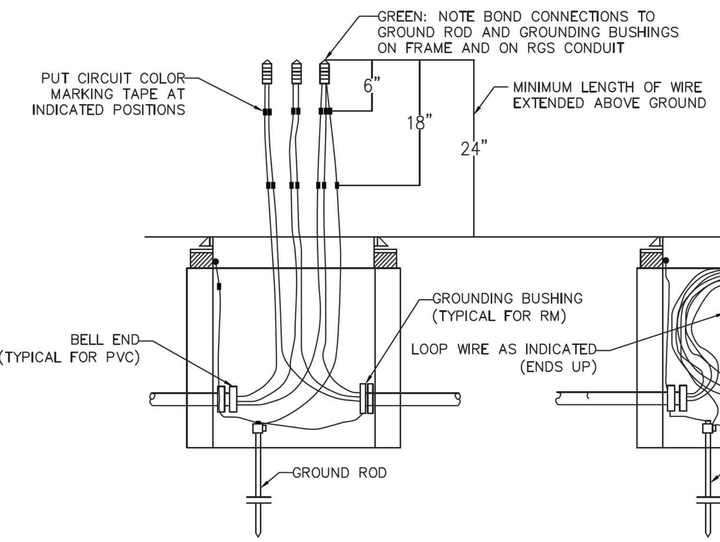

8 TYPICAL HAND HOLE WIRING DIAGRAM
SCALE: N.T.S

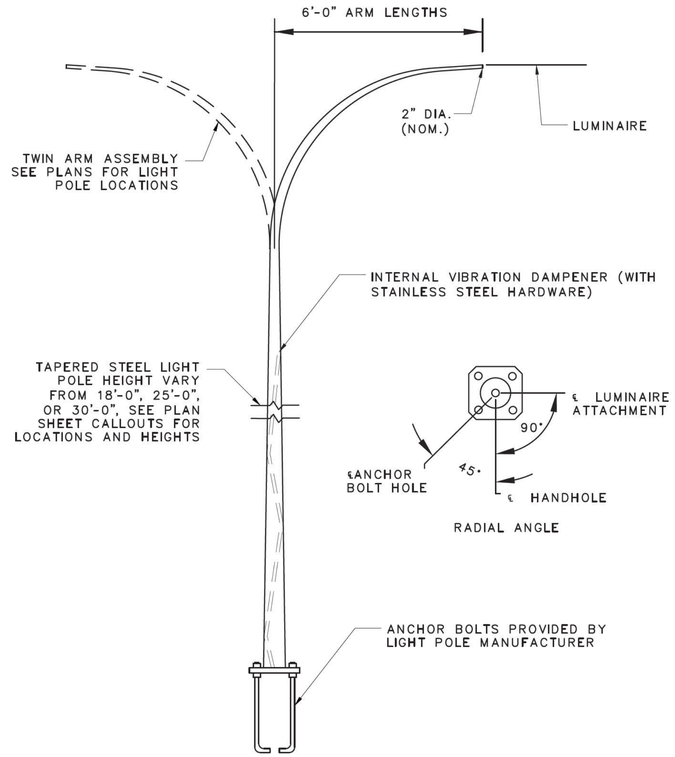

9 ROADWAY LIGHTING POLE ASSEMBLY (STEEL) DETAIL
SCALE: N.T.S

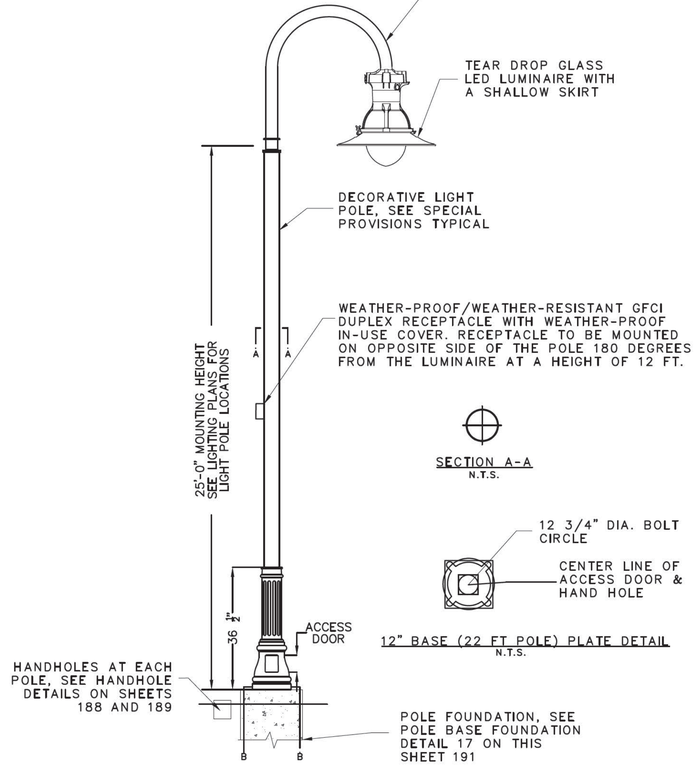

10 DECORATIVE LIGHTING POLE ASSEMBLY (STEEL) DETAIL
SCALE: N.T.S

BARNSTABLE
IYANNOUGH RD (RTE 28) AND YARMOUTH RD

STATE	FED. AID PROJ. NO.	SHEET NO.	TOTAL SHEETS
MA	TAP/HSI/CMQ/STP/NFP(NI)-0035(043)	190	231
PROJECT FILE NO.	606272		

LIGHTING DETAILS
SHEET 3 OF 4

606272_LT_LIGHTING DETAILS.DWG Plotted on 30-Oct-2020 12:47 PM

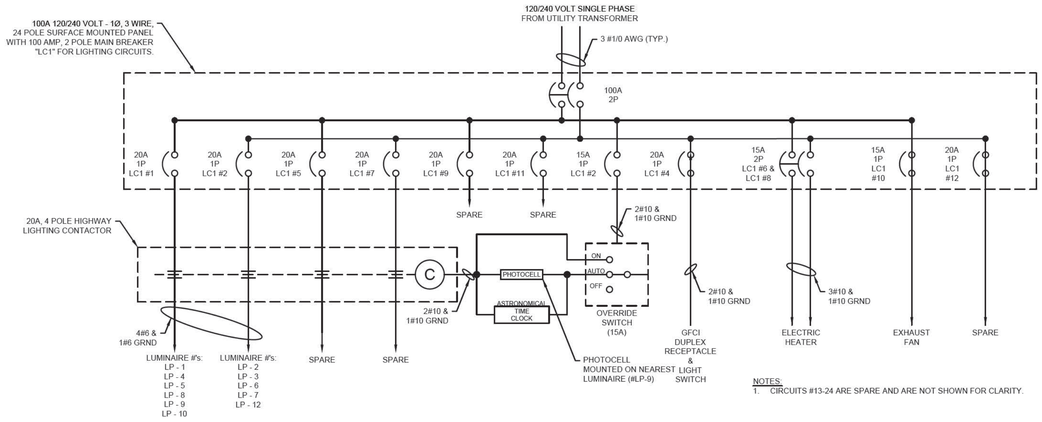

11 LIGHTING LOAD CENTER LLC-A DETAIL
SCALE: N.T.S

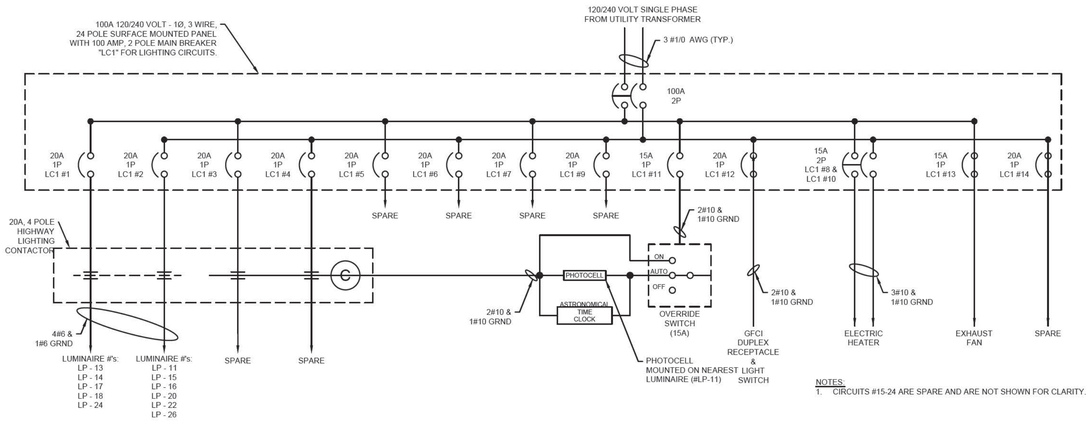

12 LIGHTING LOAD CENTER LLC-B DETAIL
SCALE: N.T.S

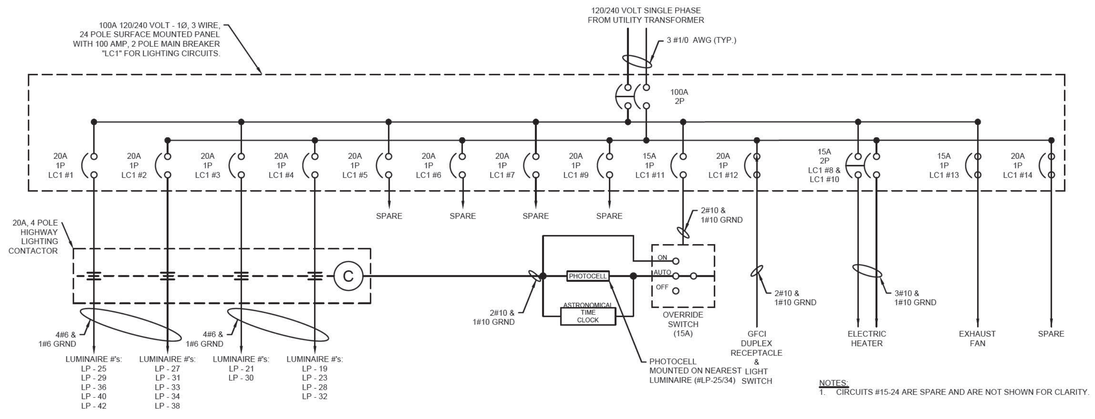

13 LIGHTING LOAD CENTER LLC-C DETAIL
SCALE: N.T.S

BARNSTABLE
IYANNOUGH RD (RTE 28) AND YARMOUTH RD

STATE	FED. AID PROJ. NO.	SHEET NO.	TOTAL SHEETS
MA	TAP/HSI/CMQ/STP/NFP(NH)-0035(043)	191	231
PROJECT FILE NO.	606272		

LIGHTING DETAILS
SHEET 4 OF 4

Plotted on 6-Apr-2021 8:39 AM
606272_LT_LIGHTING DETAILS.DWG

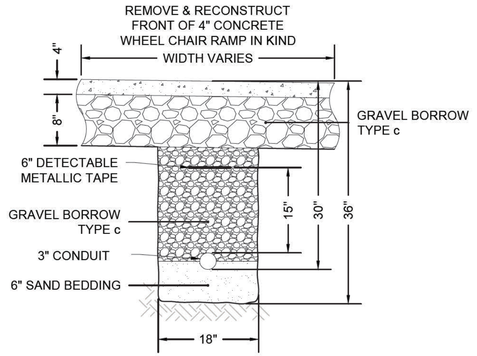

NOTES:
1. CONDUIT SHALL BE SCHEDULE 80 ELECTRICAL CONDUIT TYPE NM-PLASTIC (UL), WITH PULL ROPE.
2. WARNING TAPE COLOR SHALL BE RED PER APWA STANDARDS.
3. MINIMUM 1 FOOT SEPARATION BETWEEN CONDUITS AT UTILITY CROSSINGS.

14 CONDUIT UNDER WHEEL CHAIR RAMP DETAIL
SCALE: N.T.S

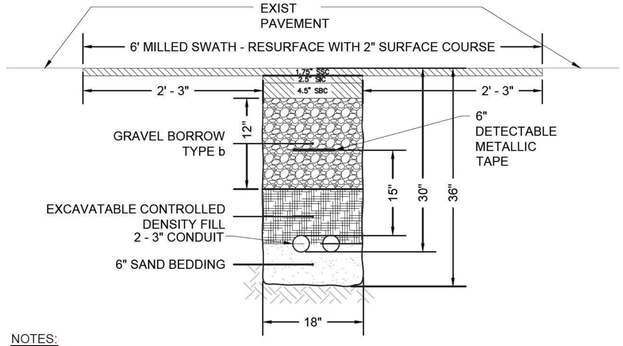

NOTES:
1. CONDUIT SHALL BE SCHEDULE 80 ELECTRICAL CONDUIT TYPE NM-PLASTIC (UL), WITH PULL ROPE.
2. WARNING TAPE COLOR SHALL BE PER APWA STANDARDS.
3. WHERE FULL DEPTH CONSTRUCTION IS PROPOSED, CONDUIT SHOULD BE CONCRETE ENCASED AND BACKFILLED WITH GRAVEL BORROW. OUTSIDE THE ROADWAY, BACKFILL IS GRAVEL BORROW TYPE C.
4. MINIMUM 1 FOOT SEPARATION BETWEEN CONDUITS AT UTILITY CROSSINGS.

15 TRENCH ROADWAY CROSSING DETAIL
SCALE: N.T.S

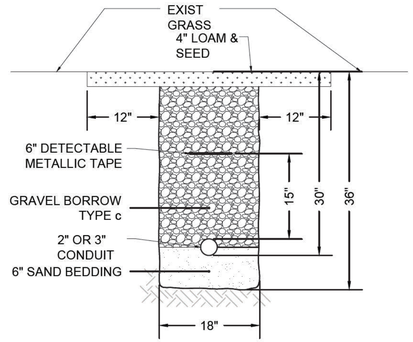

NOTES:
1. CONDUIT SHALL BE SCHEDULE 80 ELECTRICAL CONDUIT TYPE NM-PLASTIC (UL), WITH PULL ROPE.
2. WARNING TAPE COLOR SHALL BE RED PER APWA STANDARDS.

16 TRENCH UNDER GRASS DETAIL
SCALE: N.T.S

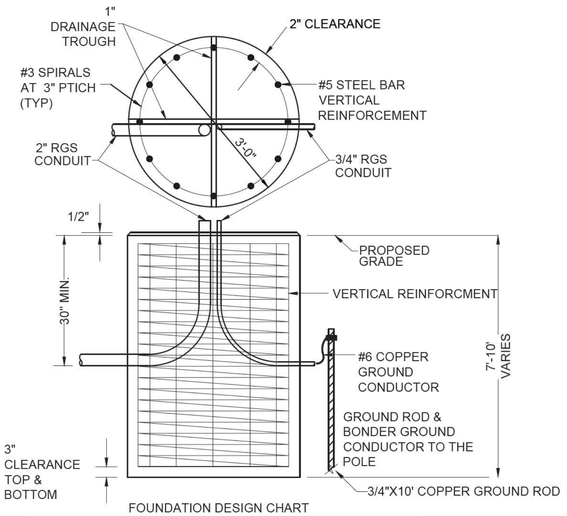

FOUNDATION DESIGN CHART

STD. DETAIL	MOUNTING HEIGHT	DIAMETER	DEPTH	VERTICAL REINFORCEMENT
SD3.013	25'-40'	3'-0"	7'-0"	8-#5

NOTES:
1. CEMENT CONCRETE FOR FOUNDATIONS TO BE 4000 PSI.
2. A MINIMUM SLOPE OF 1/8" PER FT FROM EDGE OF BASE PLATE TO FACE OF CONCRETE.
3. THE ACTUAL DEPTH OF FOUNDATION FOR MOUNTING HEIGHT BETWEEN 25'-40' WILL BE THE 7'-0" DIMENSION ABOVE PLUS THE 1/2" REVEAL AND THE ACTUAL DEPTH OF FOUNDATION FOR MOUNTING HEIGHT BETWEEN 50'-100' WILL BE THE 10'-0" DIMENSION ABOVE PLUS THE 1/2" REVEAL.
4. THE ANCHOR BOLTS SHALL BE SUPPLIED BY THE LIGHT STANDARD MANUFACTURER. THE MANUFACTURER SHALL ALSO SUPPLY A TEMPLATE FOR SETTING THE BOLTS AND SHALL INDICATE THE NECESSARY PROJECTION.
5. ORIENTATION OF SUBSURFACE HORIZONTAL RGS CONDUIT PROTRUSION FROM THE FOOTING SHALL VARY AS SHOWN ON THE PLANS.

17 LIGHT STANDARD FOUNDATION (SD3.013) DETAIL
SCALE: N.T.S

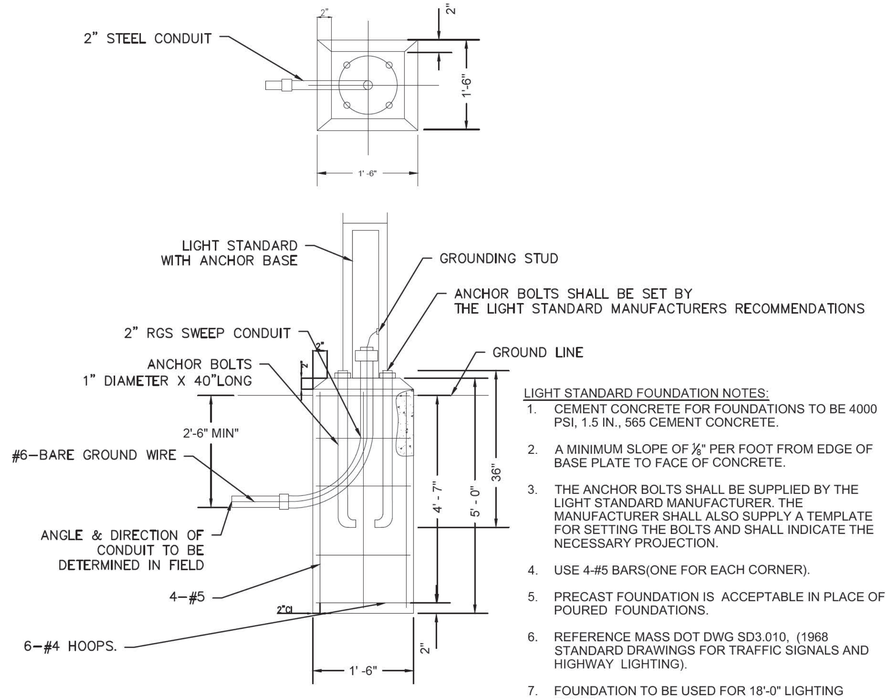

LIGHT STANDARD FOUNDATION NOTES:
1. CEMENT CONCRETE FOR FOUNDATIONS TO BE 4000 PSI, 1.5 IN., 565 CEMENT CONCRETE.
2. A MINIMUM SLOPE OF ⅛" PER FOOT FROM EDGE OF BASE PLATE TO FACE OF CONCRETE.
3. THE ANCHOR BOLTS SHALL BE SUPPLIED BY THE LIGHT STANDARD MANUFACTURER. THE MANUFACTURER SHALL ALSO SUPPLY A TEMPLATE FOR SETTING THE BOLTS AND SHALL INDICATE THE NECESSARY PROJECTION.
4. USE 4-#5 BARS(ONE FOR EACH CORNER).
5. PRECAST FOUNDATION IS ACCEPTABLE IN PLACE OF POURED FOUNDATIONS.
6. REFERENCE MASS DOT DWG SD3.010, (1968 STANDARD DRAWINGS FOR TRAFFIC SIGNALS AND HIGHWAY LIGHTING).
7. FOUNDATION TO BE USED FOR 18'-0" LIGHTING POLES.

18 LIGHT STANDARD FOUNDATION (SD3.010) DETAIL
SCALE: N.T.S

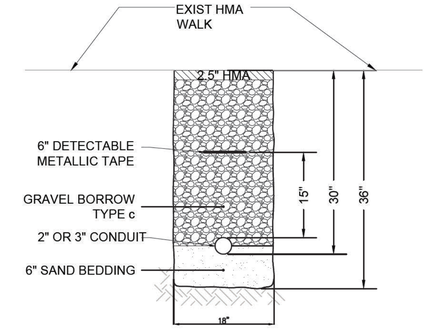

NOTES:
1. CONDUIT SHALL BE SCHEDULE 80 ELECTRICAL CONDUIT TYPE NM-PLASTIC (UL), WITH PULL ROPE.
2. WARNING TAPE COLOR SHALL BE RED PER APWA STANDARDS.

19 TRENCH HMA WALK CROSSINGS DETAIL
SCALE: N.T.S

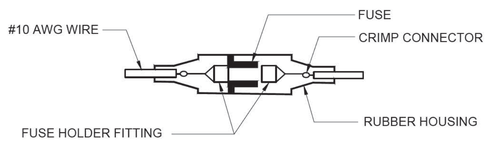

20 LUMINAIRE FUSE DETAIL
SCALE: N.T.S

SIDEWALK THROUGH DRIVEWAYS WITHOUT CURB RETURNS

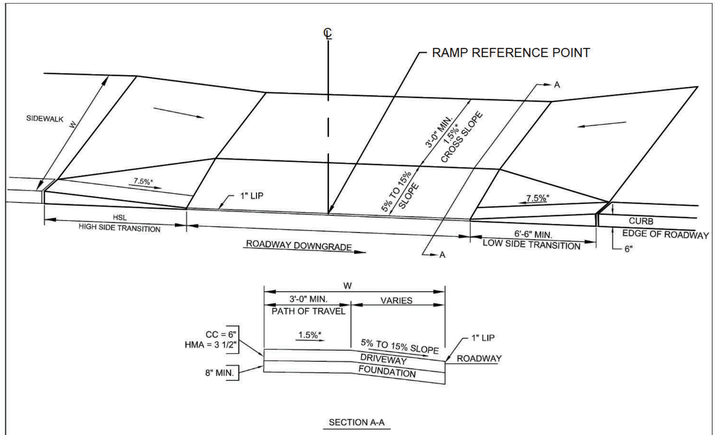

SECTION A-A

LEGEND

HSL = HIGH SIDE TRANSITION LENGTH. SEE E 107.9.0
W = SIDEWALK WIDTH
* = TOLERANCE FOR CONSTRUCTION ±0.5%
CC = CEMENT CONCRETE
HMA = HOT MIX ASPHALT

DRW #	ROADWAY	RAMP REFERENCE POINT		WIDTH OF SIDEWALK (W)	CLEAR PATH OF TRAVEL (3'-3" MIN.)	ROADWAY GUTTER SLOPE	TRANSITION RAMP LENGTH	
		STATION	OFFSET				LEFT	RIGHT
D1	ROUTE 28	107+34.63	57.50' LT	6' - 0"	4' - 0"	0.5%	6' - 6"	7' - 8"
D2	ROUTE 28	114+72.55	25.53' LT	6' - 0"	4' - 0"	-2.4%	11' - 0"	6' - 6"
D3	ROUTE 28	112+17.78	27.00' RT	6' - 0"	4' - 0"	1.1%	6'-6"	9' - 0"
D4	ROUTE 28	113+80.16	27.00' RT	6' - 0"	4' - 0"	1.4%	6'-6"	9' - 0"
D5	ROUTE 28	114+25.44	27.00' RT	6' - 0"	4' - 0"	1.8%	6'-6"	9' - 0"
D6	ROUTE 28	115+16.42	27.00' RT	6' - 0"	4' - 0"	2.7%	6' - 6"	11' - 0"
D7	ROUTE 28	116+19.96	22.40' RT	6' - 0"	4' - 0"	2.4%	6' - 6"	11' - 0"
D8	ROUTE 28	117+32.49	18.92' RT	6' - 0"	4' - 0"	1.7%	6' - 6"	9' - 0"
D9	YARMOUTH/ CAMP	201+69.47	17.63' RT	6' - 0"	4' - 0"	-1.6%	9' - 0"	6' - 6"
D10	YARMOUTH/ CAMP	202+54.78	27.00' RT	6' - 0"	4' - 0"	-1.5%	9' - 0"	6' - 6"
D11	YARMOUTH/ CAMP	203+69.34	27.00' RT	6' - 0"	4' - 0"	0.14%	6' - 6"	7' - 8"
D12	YARMOUTH/ CAMP	207+10.23	27.00' RT	6' - 0"	4' - 0"	-0.5%	7' - 8"	6' - 6"
D13	YARMOUTH/ CAMP	208+42.62	24.56' RT	6' - 0"	4' - 0"	0.3%	6' - 6"	7' - 8"
D14	YARMOUTH/ CAMP	208+83.60	23.06' RT	6' - 0"	4' - 0"	0.5%	6' - 6"	7' - 8"
D15	ROUTE 28	108+30.12	60.19' LT	5' - 6"	4' - 0"	0.2%	6' - 6"	4' - 5" *
D16	ROUTE 28	101+71.26	29.20 LT	8' - 0"	4' - 0"	0.0%	7' - 8"	6' - 6"
D17	ROUTE 28	102+11.96	28.63 LT	8' - 0"	4' - 0"	-0.6%	7' - 8"	6' - 6"
D18	ROUTE 28	103+05.61	30.86 LT	8' - 0"	4' - 0"	-0.4%	7' - 8"	6' - 6"
D19	ROUTE 28	103+76.61	35.74 LT	8' - 0"	4' - 0"	-0.3%	7' - 8"	6' - 6"
D20	ROUTE 28	101+73.25	20.44 RT	8' - 0"	4' - 0"	0.8%	6' - 6"	7' - 8"
D21	ROUTE 28	103+14.09	18.85 RT	8' - 0"	4' - 0"	0.5%	6' - 6"	7' - 8"
D22	ROUTE 28	103+71.29	18.07 RT	8' - 0"	4' - 0"	0.5%	6' - 6"	7' - 8"
D23	ROUTE 28	117+11.39	19.93 LT	5' - 6"	4' - 0"	-1.7%	9' - 0"	6' - 6"
D24	ROUTE 28	117+63.82	20.00 LT	5' - 6"	4' - 0"	-1.2%	9' - 0"	6' - 6"
D25	ROUTE 28	300+82.94	13.41 LT	5' - 6"	4' - 0"	1.3%	6' - 6"	9' - 0"

* 3" CURB REVEAL

WHEELCHAIR RAMP ON NARROW SIDEWALK WITH DETECTABLE WARNING PANEL

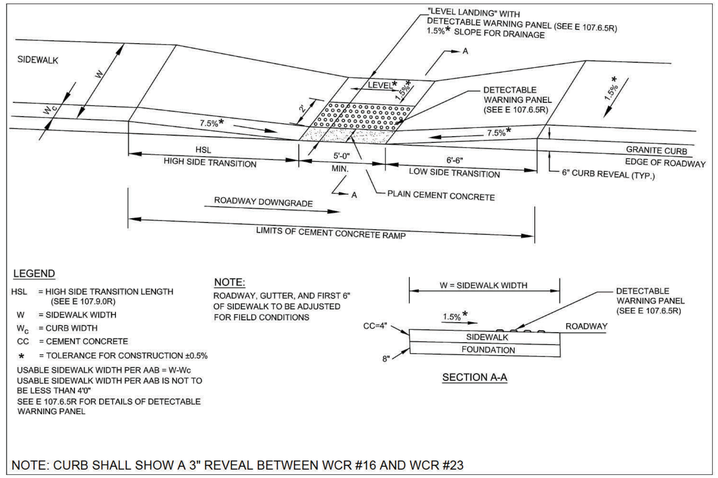

LEGEND

HSL = HIGH SIDE TRANSITION LENGTH (SEE E 107.9.0R)
W = SIDEWALK WIDTH
W_C = CURB WIDTH
CC = CEMENT CONCRETE
★ = TOLERANCE FOR CONSTRUCTION ±0.5%
USABLE SIDEWALK WIDTH PER AAB = W-Wc
USABLE SIDEWALK WIDTH PER AAB IS NOT TO BE LESS THAN 4'0"
SEE E 107.6.5R FOR DETAILS OF DETECTABLE WARNING PANEL

NOTE:
ROADWAY, GUTTER, AND FIRST 6" OF SIDEWALK TO BE ADJUSTED FOR FIELD CONDITIONS

SECTION A-A

NOTE: CURB SHALL SHOW A 3" REVEAL BETWEEN WCR #16 AND WCR #23

WCR #	ROADWAY	RAMP REFERENCE POINT		WIDTH OF SIDEWALK (W)	WIDTH OF RAMP ENTRANCE (5' MIN.)	ROADWAY GUTTER SLOPE	TRANSITION RAMP LENGTH	
		STATION	OFFSET				LEFT	RIGHT
2	ROUTE 28	105+25.80	67.70' LT	5' - 6"	5' - 0"	-2.0%	9' - 0"	6' - 6"
6	ROUTE 28	110+94.42	45.54' LT	6' - 0"	5' - 0"	-1.6%	9' - 0"	6' - 6"
16	ROUTE 28	111+01.83	31.82' RT	6' - 0"	5' - 0"	0.8%	6' - 6"	3' - 10" *
18	YARMOUTH/ CAMP	202+45.59	41.70' LT	6' - 0"	5' - 0"	1.5%	6' - 6"	9' - 0"
19	YARMOUTH/ CAMP	203+02.24	46.67' LT	6' - 0"	5' - 0"	2.9%	6' - 6"	11' - 0"
20	YARMOUTH/ CAMP	204+76.44	38.30' LT	6 - 0" (MIN)	5' - 0"	-0.4%	7' - 8"	6' - 6"
23	YARMOUTH/ CAMP	204+52.73	35.38' RT	6' - 0"	5' - 0"	0.6%	3' - 3" *	7' - 8"
24	YARMOUTH/ CAMP	205+91.65	27.07' RT	6' - 0"	5' - 0"	0.2%	6' - 6"	7' - 8"
27	YARMOUTH/ CAMP	212+41.69	16.00' RT	6' - 0"	5' - 0"	1.3%	6' - 6"	9' - 0"

* 3" CURB REVEAL

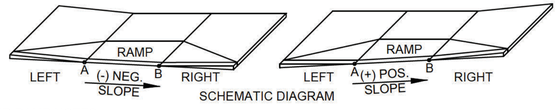

SCHEMATIC DIAGRAM

WHEELCHAIR RAMP NOTES:

1. USABLE SIDEWALK WIDTH PER AAB IS NOT TO BE LESS THAN 4'-0" (521 CMR 22.2).
2. SEE CONSTRUCTION STANDARD DETAILS (OCTOBER 2017) FOR ADDITIONAL WHEELCHAIR RAMP DETAILS.
3. DETECTABLE WARNING PANELS SHALL BE INSTALLED AT EACH WHEELCHAIR RAMP AND SHALL MEET THE REQUIREMENTS OF THE CONSTRUCTION STANDARDS OF DRAWING NUMBER: E 107.6.5R.
4. THE LOW SIDE TRANSITION LENGTH (LSL) IS 6.5'; THE HIGH SIDE TRANSITION LENGTH (HSL) VARIES DEPENDING ON THE ROADWAY PROFILE GRADE ALONG THE HIGH SIDE TRANSITION, REFER TO CONSTRUCTION STANDARD DETAIL E 107.9.0 AND THE SCHEMATIC DIAGRAM TO THE RIGHT.
5. PER PROWAG R304.2.2 AND R304.3.2 THE HIGH SIDE TRANSITION LENGTH SHALL BE LIMITED TO 15 FEET WHICH MAY RESULT IN A SLOPE EXCEEDING THAT ALLOWED BY REGULATION. IN THIS CASE, THE 15 FOOT LENGTH IS THE STANDARD FOR DETERMINING ACCEPTANCE AND THE SLOPE IS NOT THE DETERMINING VALUE PROVIDED AN APPROVED APPLICATION FOR VARIANCE HAS BEEN FILED WITH THE MASSACHUSETTS ARCHITECTURAL ACCESS BOARD.
6. THE ROADWAY GUTTER SLOPE REFERS TO THE ROADWAY SLOPE ALONG THE PRIMARY RAMP, BETWEEN POINTS "A" AND "B" IN THE SCHEMATIC DIAGRAM AT RIGHT. A NEGATIVE SLOPE (-) INDICATES A DOWNWARD SLOPE, FROM HIGH TO LOW; A POSITIVE SLOPE (+) INDICATES AN UPWARD SLOPE, FROM LOW TO HIGH. THE NOMENCLATURE FOR "LEFT" AND "RIGHT" IS INTERPRETED AS FACING THE PRIMARY RAMP FROM THE REFERENCED ALIGNMENT.
7. THE EXISTING GROUND SURFACE BEHIND THE WHEELCHAIR RAMP SHALL BE REGRADED AS NECESSARY TO RECONCILE ANY ELEVATION DIFFERENCE BETWEEN EXISTING GROUND AND THE FINAL RAMP GRADE. ALL REGRADED AREAS SHALL CONSIST OF LOAM AND SEED OR PAVEMENT MILLING MULCH AS NOTED ON THE CONSTRUCTION PLANS.

BARNSTABLE
IYANNOUGH RD (RTE 28) AND YARMOUTH RD

STATE	FED. AID PROJ. NO.	SHEET NO.	TOTAL SHEETS
MA	TAP/HSI/CMQ/STP/INFP(NI)-0035(043)	192	231
PROJECT FILE NO.	606272		

WHEELCHAIR RAMP AND DRIVEWAY SCHEDULES AND DETAILS

WHEELCHAIR RAMP FOR ONE CONTINUOUS DIRECTION OF PEDESTRIAN TRAVEL

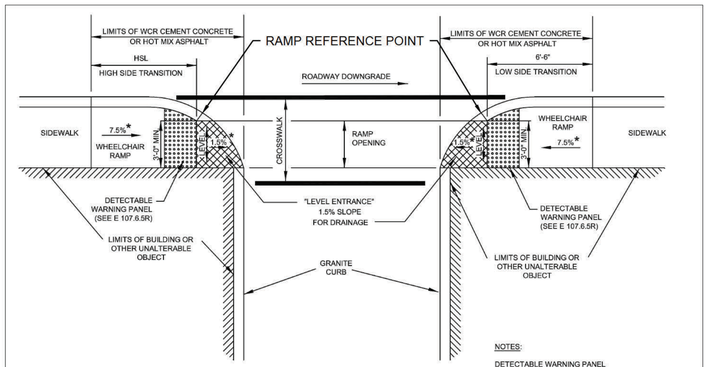

LEGEND

HSL = HIGH SIDE TRANSITION LENGTH (SEE E 107.9.0R)
★ = TOLERANCE FOR CONSTRUCTION ±0.5%

NOTES:

DETECTABLE WARNING PANEL LOCATED NOT LESS THAN 6" OR MORE THAN 24" FROM ROADWAY EDGE (GUTTER LINE). TRUNCATED DOMES TO BE ALIGNED WITH DIRECTION OF TRAVEL.

FOR DETAILS OF TRUNCATED DOMES SEE DRAWING E 107.6.5R.

ROADWAY, GUTTER, AND FIRST 6" OF SIDEWALK TO BE ADJUSTED FOR FIELD CONDITIONS.

WCR #	ROADWAY	RAMP REFERENCE POINT		WIDTH OF SIDEWALK (W)	WIDTH OF RAMP ENTRANCE (3' - 3" MIN.)	ROADWAY GUTTER SLOPE	TRANSITION RAMP LENGTH	
		STATION	OFFSET				LEFT	RIGHT
7	ROUTE 28	112+92.62	36.41' LT	6' - 0"	3' - 3"	-1.0%	7' - 8"	N/A
8	ROUTE 28	113+70.57	32.96' LT	6' - 0"	3' - 3"	-2.1%	N/A	6' - 6"
11	ROUTE 28	106+72.74	32.50' RT	10' - 0"	10' - 0"	-0.1%	N/A	6' - 6"
12	ROUTE 28	107+04.02	32.52' RT	10' - 0"	10' - 0"	-0.3%	7' - 8"	N/A
17	ROUTE 28	118+31.68	18.13' RT	6' - 0"	3' - 3"	1.9%	N/A	9' - 0"
25	YARMOUTH/ CAMP	206+31.24	29.33' RT	6' - 0"	3' - 3"	-0.7%	N/A	6' - 6"
26	YARMOUTH/ CAMP	206+74.34	29.44' RT	6' - 0"	3' - 3"	-0.7%	7' - 8"	N/A
28	YARMOUTH/ CAMP	212+73.78	18.73' RT	6' - 0"	3' - 3"	1.2%	N/A	9' - 0"
29	YARMOUTH/ CAMP	213+35.33	16.12' RT	6' - 0"	3' - 3"	0.2%	6' - 6"	N/A
30	YARMOUTH/ CAMP	213+74.70	15.81' RT	6' - 0"	3' - 3"	-0.5%	N/A	6' - 6"
31	YARMOUTH/ CAMP	214+31.73	13.85' RT	4' - 6"	3' - 3"	-0.7%	7' - 8"	N/A
32	ROUTE 28	119+60.00	29.37' LT	6' - 0"	6' - 0"	-1.9%	9' - 0"	N/A
33	ENGINE HOUSE RD	501+32.29	23.12' RT	10' - 0"	10' - 0"	1.6%	6' - 6"	N/A
35	ROUTE 28	101+39.37	33.87' LT	8' - 0"	8' - 0"	-0,7%	N/A	7' - 8"
36	ROUTE 28	101+19.91	25.35' RT	7' - 0"	7' - 0"	-0.6%	N/A	7' - 8"
37	YARMOUTH/ CAMP	200+59.02	25.35' RT	4' - 0" (EX.)	3' - 3"	-0.8%	6' - 6"	N/A
38	YARMOUTH/ CAMP	200+06.56	25.35' RT	4' - 0" (EX.)	3' - 3"	-0.8%	N/A	7' - 8"

606272_HD16(WCR DETAILS).DWG Plotted on 11-Apr-2021 10:29 AM

BARNSTABLE
IYANNOUGH RD (RTE 28) AND YARMOUTH RD

STATE	FED. AID PROJ. NO.	SHEET NO.	TOTAL SHEETS
MA	TAP/HSI/CMQ/STP/INFP(NI)-0035(043)	193	231
PROJECT FILE NO.	606272		

WHEELCHAIR RAMP AND DRIVEWAY SCHEDULES AND DETAILS

606272_HDT6(WCR DETAILS).DWG Plotted on 26-Mar-2021 11:07 AM

WHEELCHAIR RAMP WITH LANDSCAPING STRIP

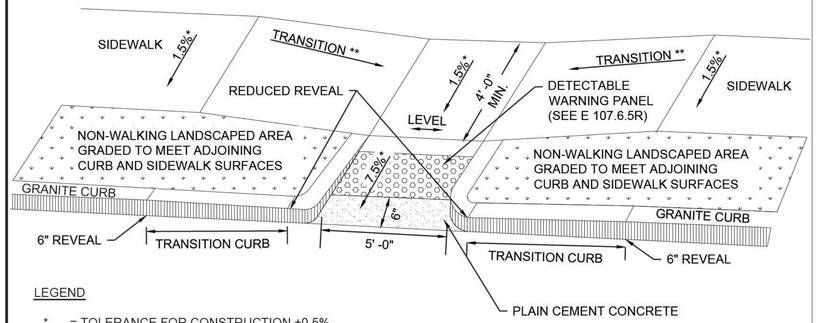

WCR #	ROADWAY	RAMP REFERENCE POINT		WIDTH OF SIDEWALK (W)	WIDTH OF RAMP ENTRANCE (5' MIN.)	ROADWAY GUTTER SLOPE	TRANSITION RAMP LENGTH	
		STATION	OFFSET				LEFT	RIGHT
10	ROUTE 28	105+22.82	31.47' RT	10' - 0"	5' - 0"	-1.7%	9' - 0"	6' - 6"
22	YARMOUTH/ CAMP	212+41.80	16.00' LT	10' - 0"	5' - 0"	-1.3%	9' - 0"	N/A

WHEELCHAIR RAMP 13 - SHARED USE PATH AT WEST END OF GRADE CROSSING

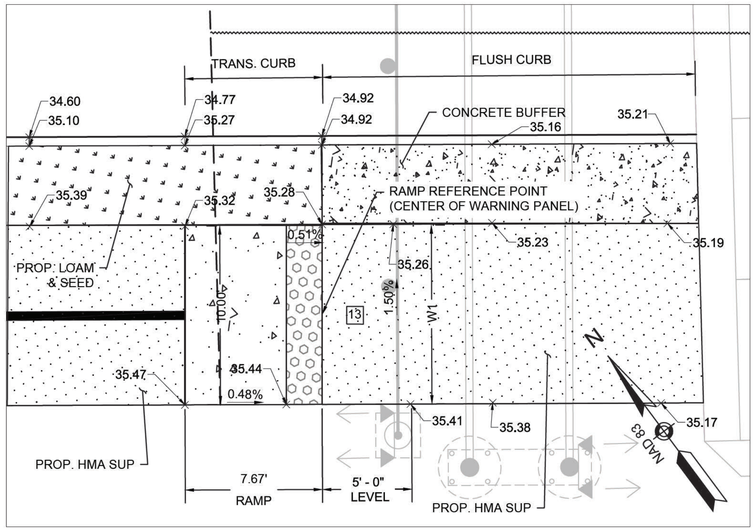

WCR #	ROADWAY	RAMP REFERENCE POINT		WIDTH OF SIDEWALK (W)	WIDTH OF RAMP ENTRANCE (W1) (5' MIN.)	ROADWAY GUTTER SLOPE	TRANSITION RAMP LENGTH	
		STATION	OFFSET				LEFT	RIGHT
13	ROUTE 28	108+36.29	37.00' RT	10' - 0"	10' - 0"	1.2%	N/A	7' -8"

WHEELCHAIR RAMP 34 - ENGINE HOUSE ROAD

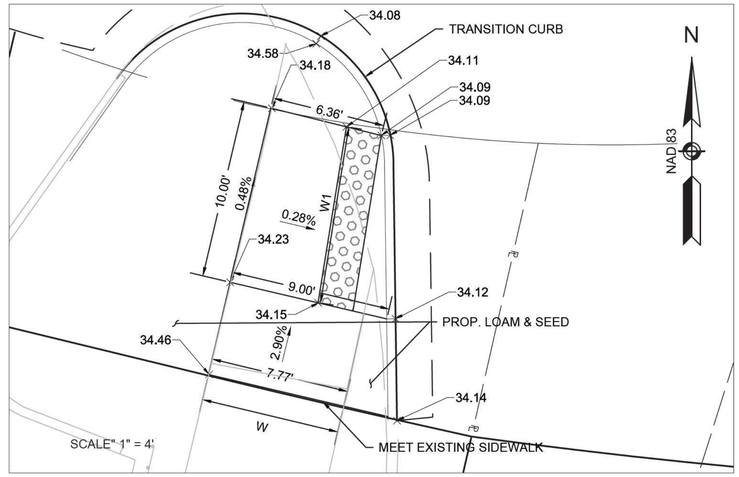

WCR #	ROADWAY	RAMP REFERENCE POINT		WIDTH OF SIDEWALK (W)	WIDTH OF RAMP ENTRANCE (W1) (5' MIN.)	ROADWAY GUTTER SLOPE	TRANSITION RAMP LENGTH	
		STATION	OFFSET				LEFT	RIGHT
34	ENGINE HOUSE RD	500+76.86	24.05' RT	10' - 4"	10' - 0"	-0.3%	5' - 6"	N/A

WHEELCHAIR RAMP 14 & 15 - SHARED USE PATH AT EAST END OF GRADE CROSSING

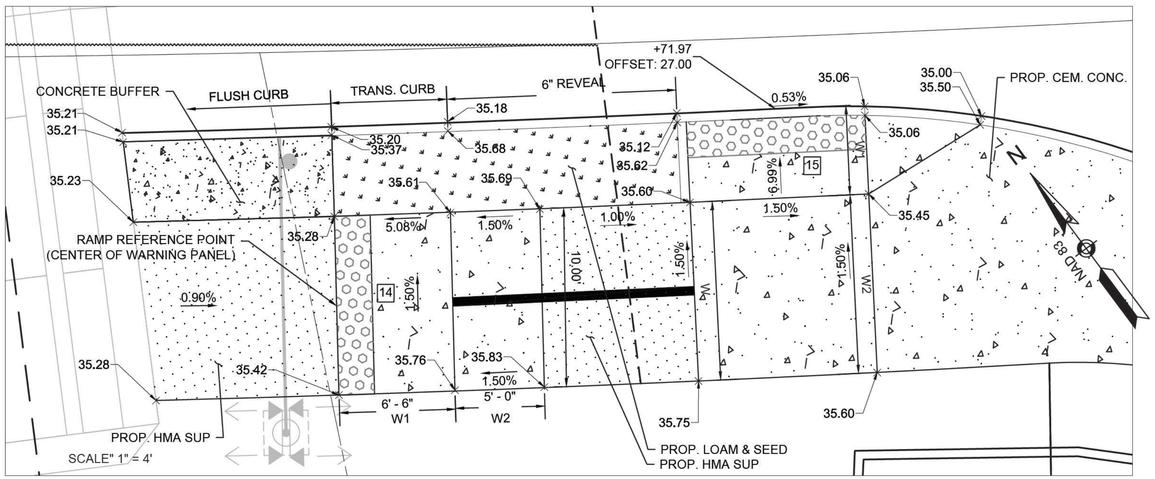

WCR #	ROADWAY	RAMP REFERENCE POINT		LENGTH OF PRIMARY RAMP (W1)	WIDTH OF SIDEWALK (W)	WIDTH OF RAMP ENTRANCE (5' MIN.)	DEPTH OF LEVEL LANDING (W2)	ROADWAY GUTTER SLOPE	TRANSITION RAMP LENGTH	
		STATION	OFFSET						LEFT	RIGHT
14	ROUTE 28	109+47.52	37.00' RT	6' - 6"	10' - 0"	10' - 0"	5' - 0"	0.1%	6' - 6"	N/A
15	ROUTE 28	109+71.94	27.00' RT	5' - 0"	15' - 0"	10' - 0"	10' - 0"	0.7%	6' - 6"	N/A

WHEELCHAIR RAMPS 4, 5 & 21 - NORTHWEST QUADRANT OF INTERSECTION

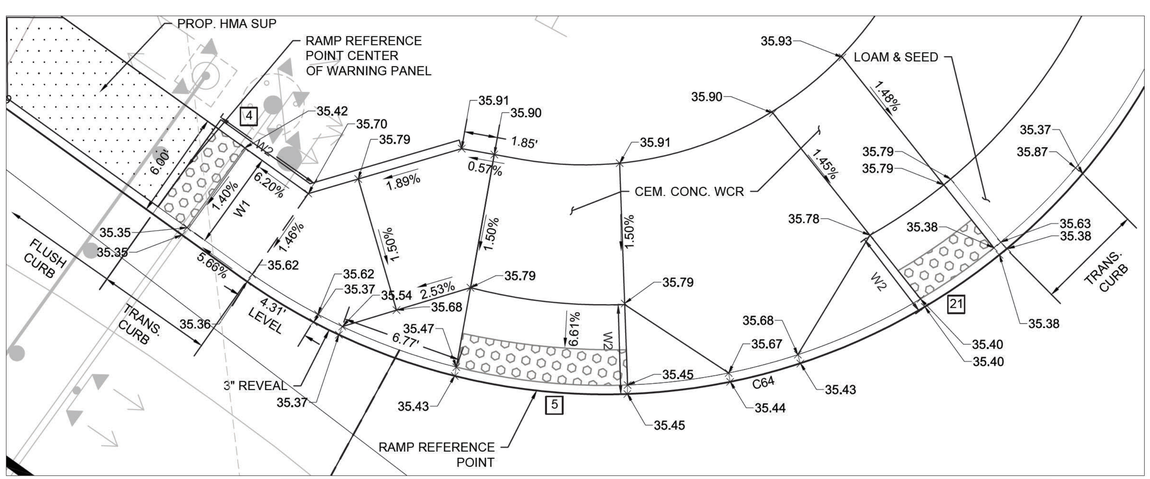

WCR #	ROADWAY	RAMP REFERENCE POINT		LENGTH OF PRIMARY RAMP (W2)	WIDTH OF SIDEWALK (W)	WIDTH OF RAMP ENTRANCE (W1) (5' MIN.)	ROADWAY GUTTER SLOPE	TRANSITION RAMP LENGTH	
		STATION	OFFSET					LEFT	RIGHT
4	ROUTE 28	109+38.69	63.30' LT	6' - 6"	6' - 0"	5' - 6"	0.3%	N/A	6' - 6"
5	ROUTE 28	109+64.51	60.83' LT	5' - 0"	12' - 9"	10' - 0"	-0.2%	7' - 8"	6' - 6"
21	YARMOUTH/ CAMP	205+94.28	50.02' LT	5' - 0"	13' - 10"	5' - 0"	0.4%	7' - 8"	N/A

STATE	FED. AID PROJ. NO.	SHEET NO.	TOTAL SHEETS
MA	TAP/HSI/CMQ/STP/INFP(NI)-0035(043)	194	231
PROJECT FILE NO.	606272		

WHEELCHAIR RAMP AND DRIVEWAY SCHEDULES AND DETAILS

606272_HD16(WCR DETAILS).DWG Plotted on 11-Apr-2021 10:24 AM

WHEELCHAIR RAMP LESS THAN 12' - 4" SIDEWALK

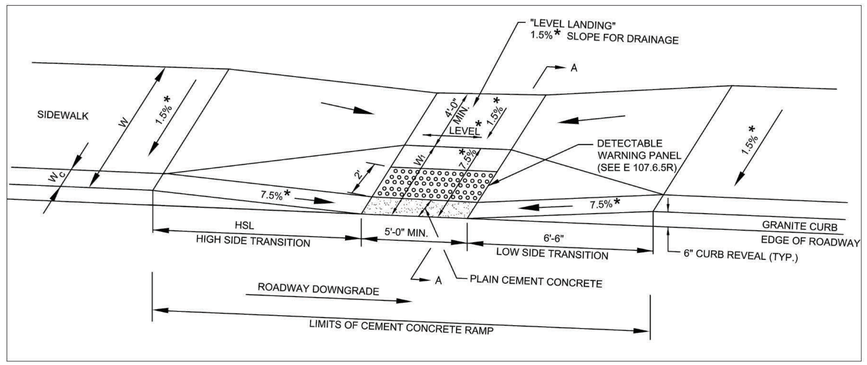

WCR #	ROADWAY	RAMP REFERENCE POINT		WIDTH OF SIDEWALK (W)	WIDTH OF RAMP ENTRANCE (5' MIN.)	ROADWAY GUTTER SLOPE	TRANSITION RAMP LENGTH	
		STATION	OFFSET				LEFT	RIGHT
1	ROUTE 28	104+50.55	58.07' LT	8' - 0"	5' - 0"	2.5%	6' - 6"	11' - 0"
9	ROUTE 28	104+77.82	31.65' RT	8' - 0"	5' - 0"	0.8%	6' - 6"	7' - 8"

WHEELCHAIR RAMP 3 - ROUTE 28 AT RR GRADE CROSSING

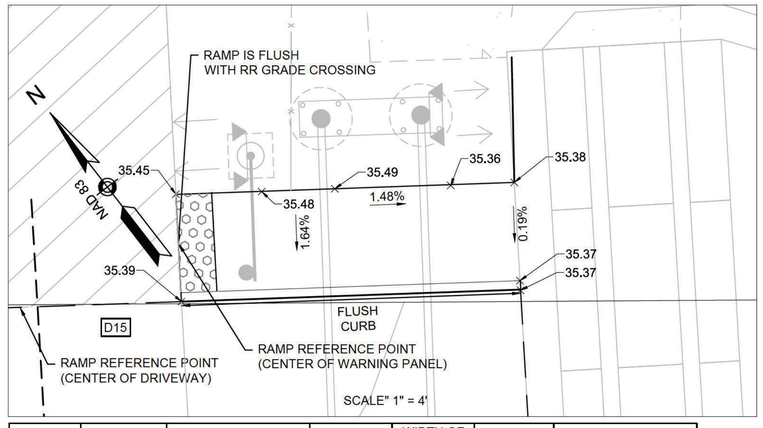

WCR #	ROADWAY	RAMP REFERENCE POINT		WIDTH OF SIDEWALK (W)	WIDTH OF RAMP ENTRANCE (W1) (5' MIN.)	ROADWAY GUTTER SLOPE	TRANSITION RAMP LENGTH	
		STATION	OFFSET				LEFT	RIGHT
3	ROUTE 28	108+37.32	62.75' LT	6' - 0"	6' - 0"	0.6%	N/A	N/A

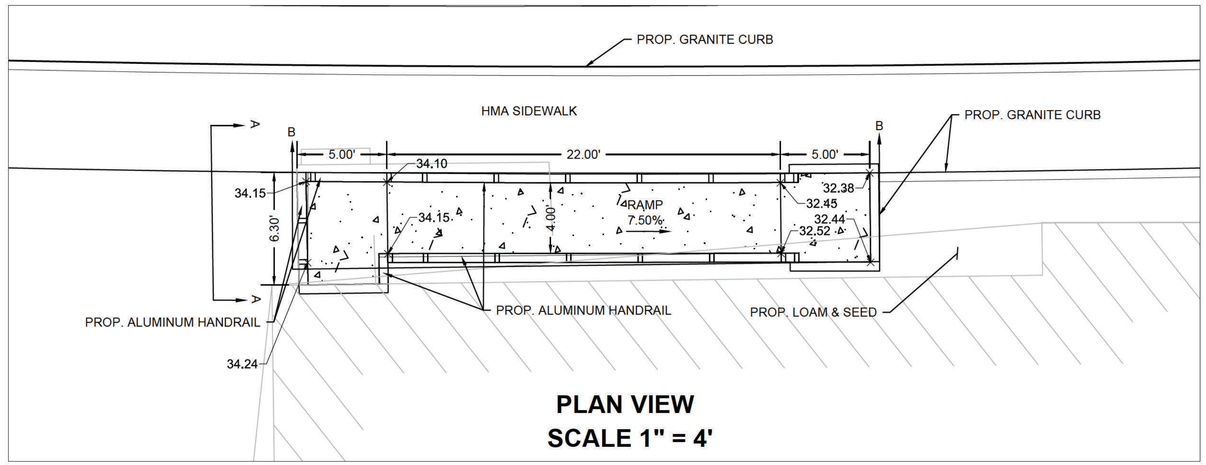

PLAN VIEW
SCALE 1" = 4'

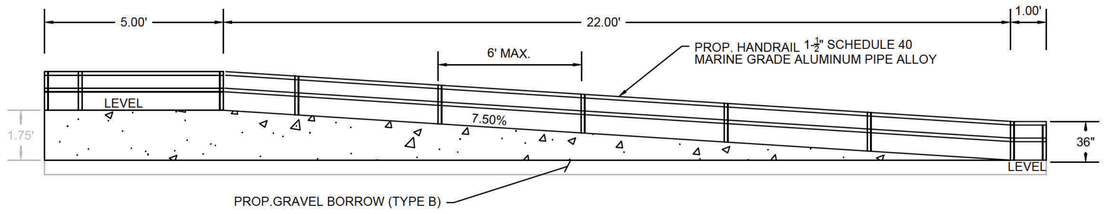

SECTION B-B
NOT TO SCALE

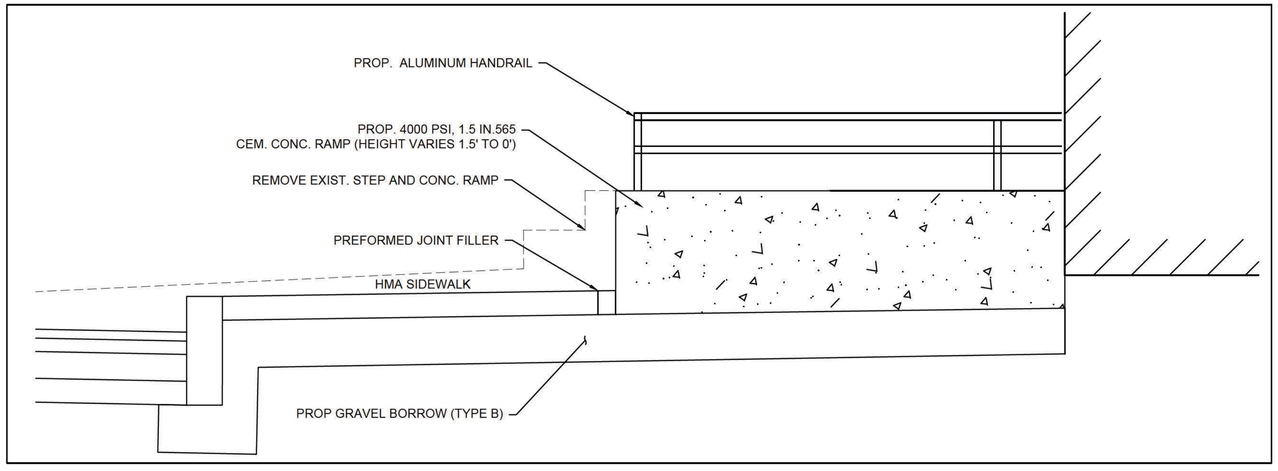

SECTION A-A
131 IYANNOUGH ROAD RAMP DETAIL

606272_HD16(WCR DETAILS-2).DWG Plotted on 8-Apr-2021 11:21 AM

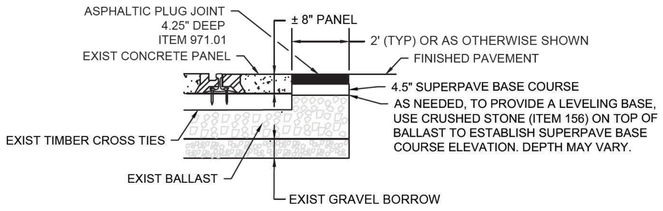

ASPHALTIC PLUG JOINT DETAIL
N.T.S.

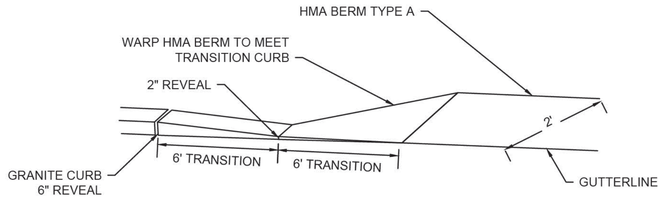

GRANITE CURB TO HMA BERM TRANSITION
NOT TO SCALE

LETTERED GRANITE BOUND DETAIL
NOT TO SCALE

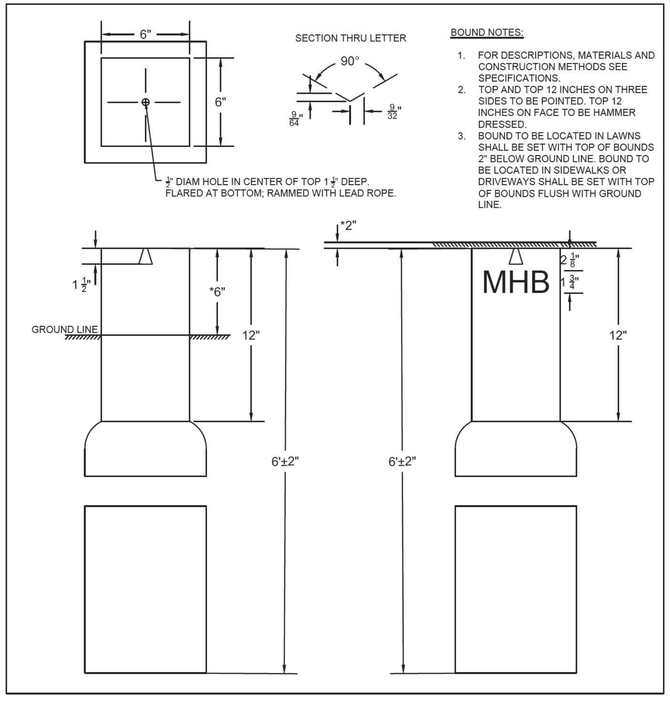

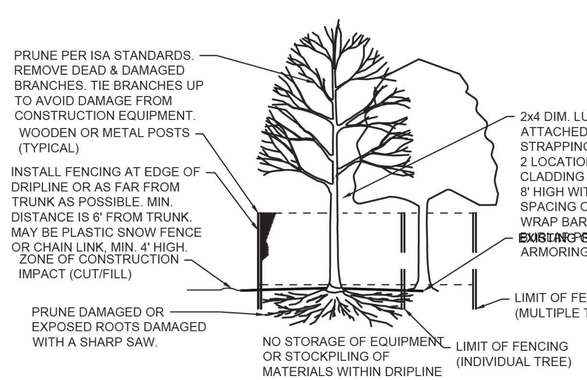

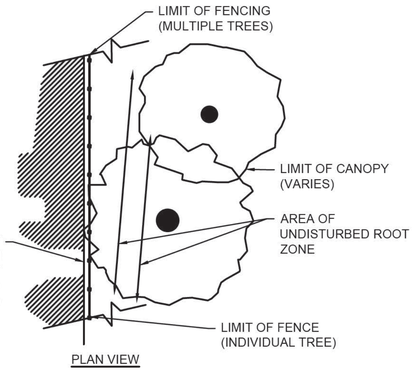

TREE PROTECTION
NOT TO SCALE

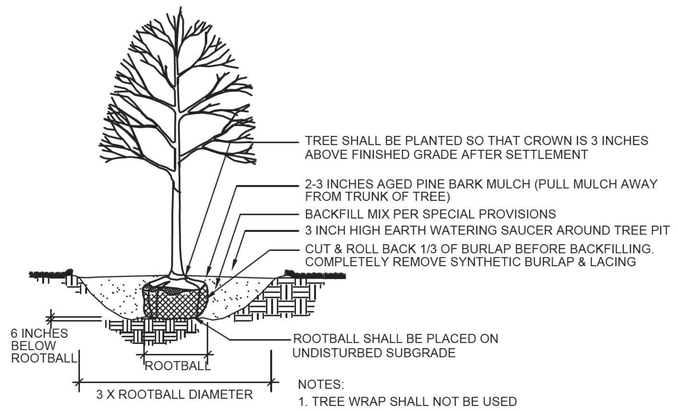

NOTES:
1. TREE WRAP SHALL NOT BE USED
2. TREE SHALL BE SET PLUMB
3. WATERING SAUCER SHALL BE FLOODED TWICE DURING THE FIRST 24 HOURS AFTER PLANTING

TREE PLANTING
NOT TO SCALE

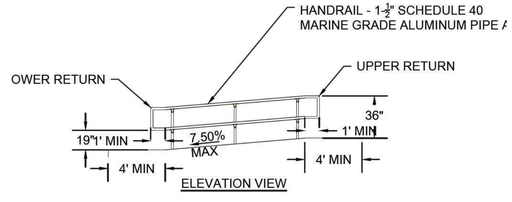

DETAIL - ALUMINUM HANDRAIL
NOT TO SCALE

BARNSTABLE
IYANNOUGH RD (RTE 28) AND YARMOUTH RD

STATE	FED. AID PROJ. NO.	SHEET NO.	TOTAL SHEETS
MA	TAP/HSI/CMQ/STP/INFP(NI)-0035(043)	196	231
PROJECT FILE NO. 606272			

CROSS SECTIONS - ROUTE 28

606272_HD12(XSEC RT28).DWG Plotted on 11-Apr-2021 9:56 AM

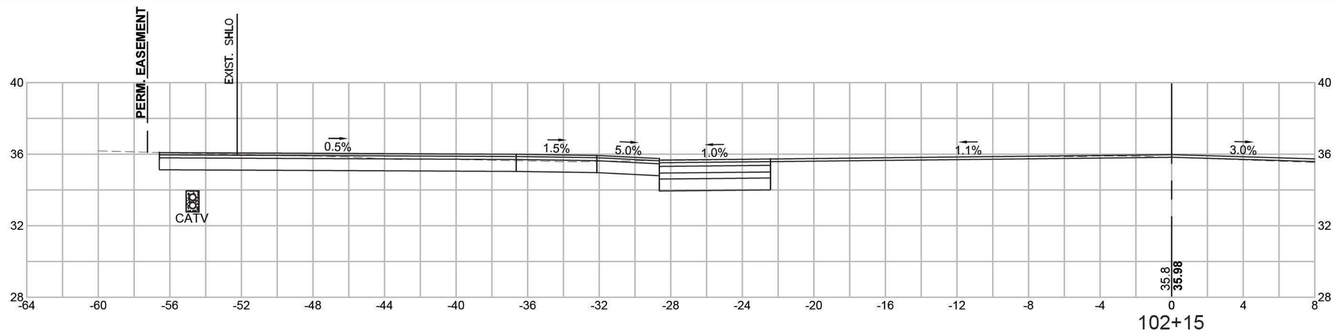

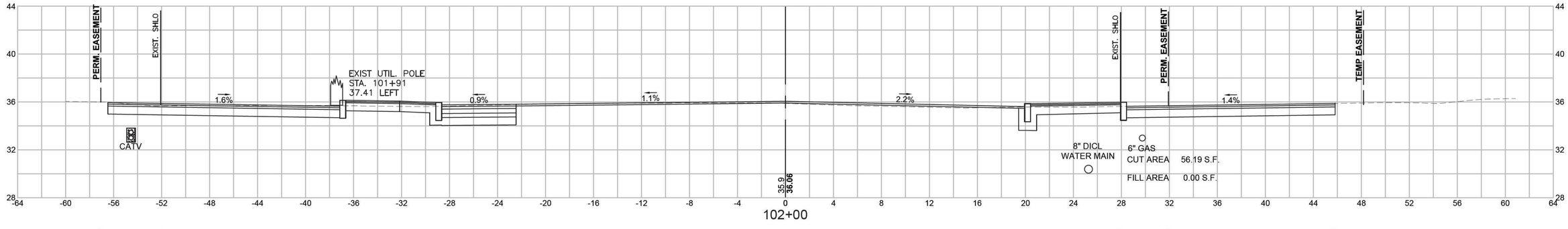

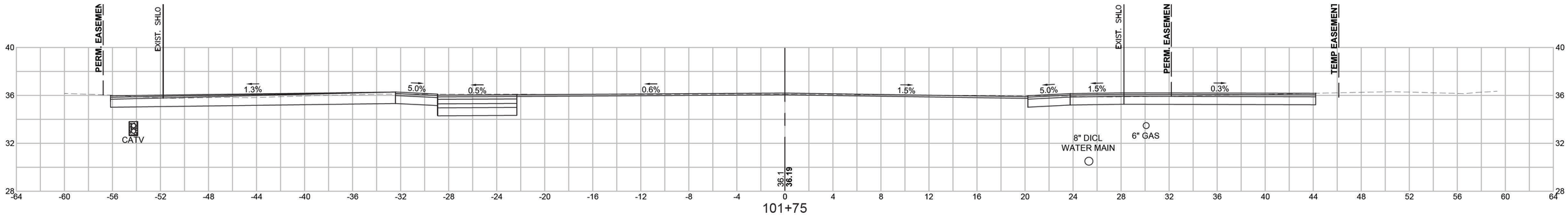

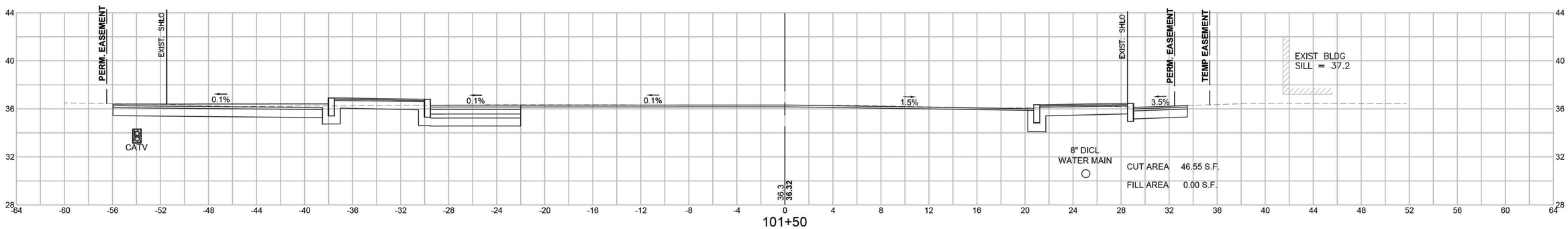

HOR. SCALE IN FEET
4 0 4 8
4 0 4 8
VER. SCALE IN FEET

BARNSTABLE
IYANNOUGH RD (RTE 28) AND YARMOUTH RD

STATE	FED. AID PROJ. NO.	SHEET NO.	TOTAL SHEETS
MA	TAP/HSI/CMQ/STP/INFP(NI)-0035(043)	197	231
PROJECT FILE NO.	606272		

CROSS SECTIONS - ROUTE 28

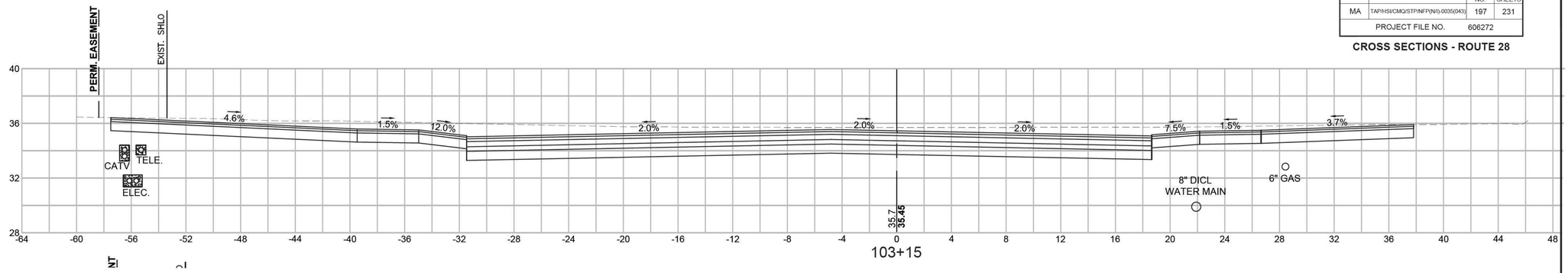

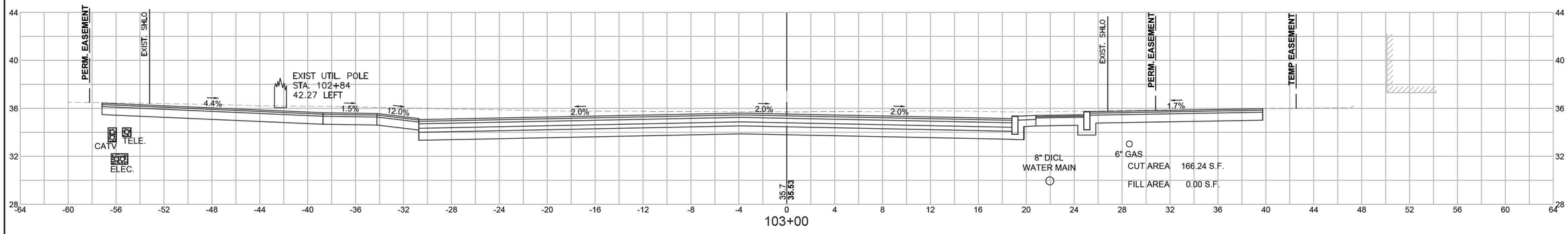

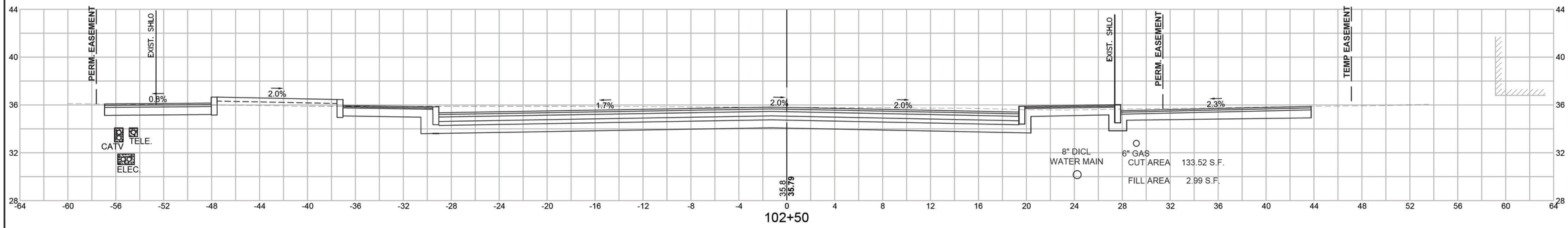

HOR. SCALE IN FEET
4 0 4 8
4 0 4 8
VER. SCALE IN FEET

606272_HD12\XSEC RT28).DWG Plotted on 30-Oct-2020 1:02 PM

BARNSTABLE
IYANNOUGH RD (RTE 28) AND YARMOUTH RD

STATE	FED. AID PROJ. NO.	SHEET NO.	TOTAL SHEETS
MA	TAP/HSI/CMQ/STP/NFP(NI)-0035(043)	198	231
PROJECT FILE NO.	606272		

CROSS SECTIONS - ROUTE 28

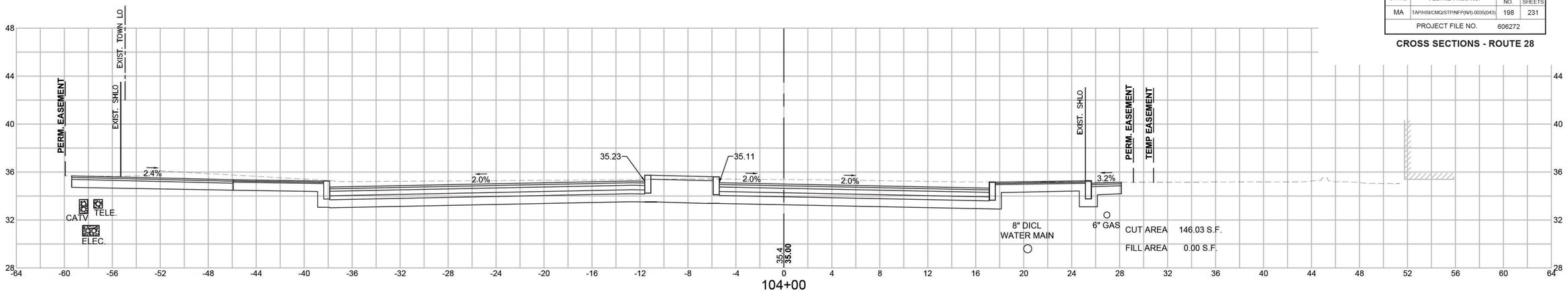

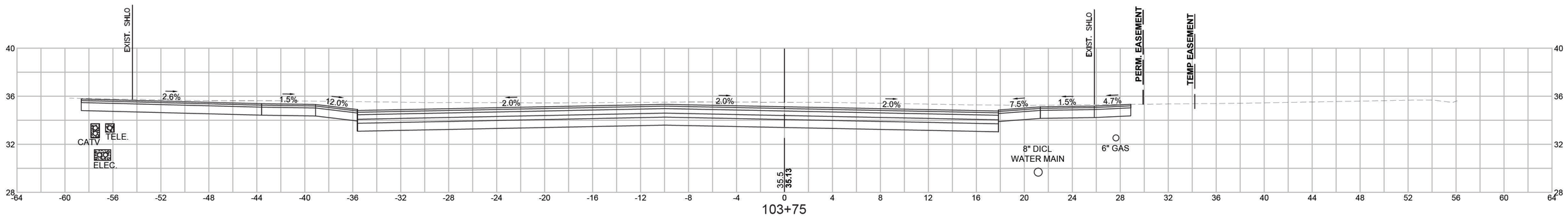

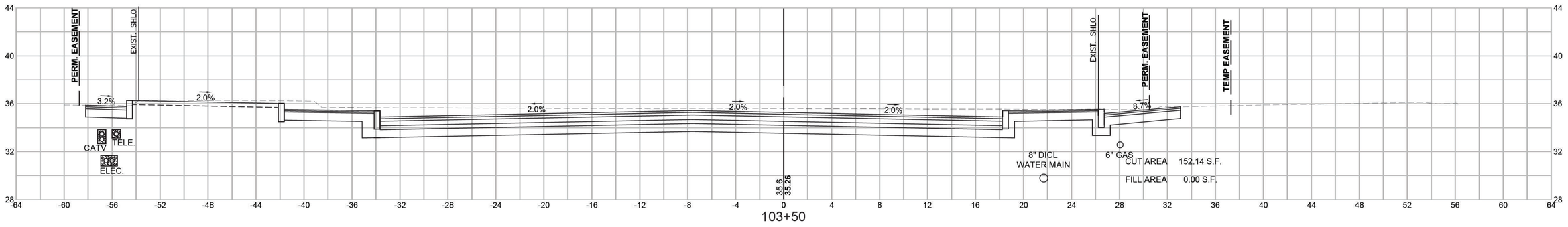

HOR. SCALE IN FEET
4 0 4 8
4 0 4 8
VER. SCALE IN FEET

606272_HD12(XSEC RT28).DWG Plotted on 30-Oct-2020 1:03 PM

BARNSTABLE
IYANNOUGH RD (RTE 28) AND YARMOUTH RD

STATE	FED. AID PROJ. NO.	SHEET NO.	TOTAL SHEETS
MA	TAP/HSI/CMQ/STP/NFP(NI)-0035(043)	199	231
PROJECT FILE NO.	606272		

CROSS SECTIONS - ROUTE 28

Plotted on 10-Apr-2021 6:52 PM
606272_HD12(XSEC RT28).DWG

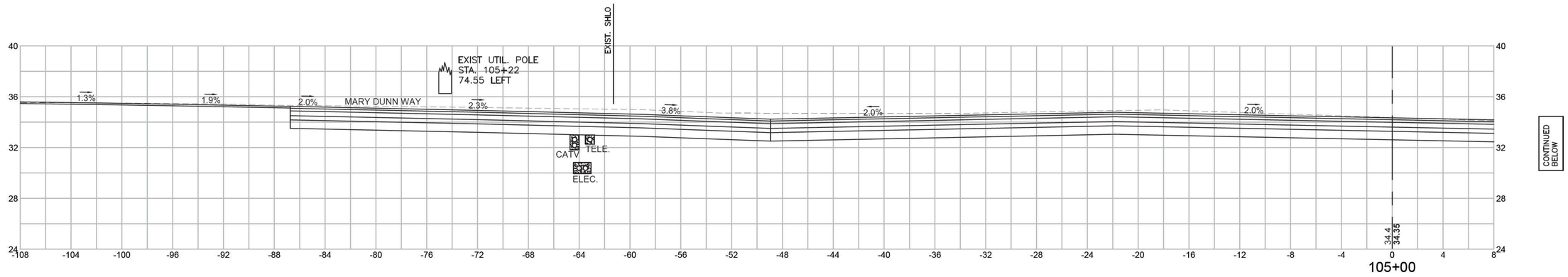

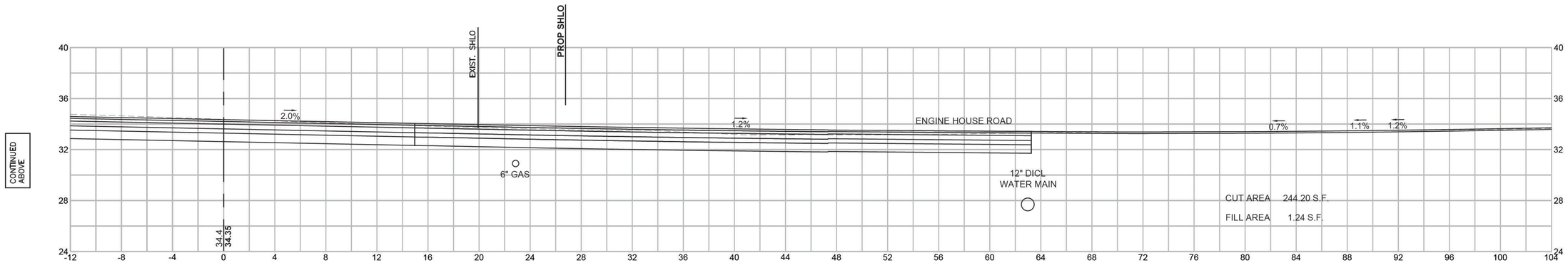

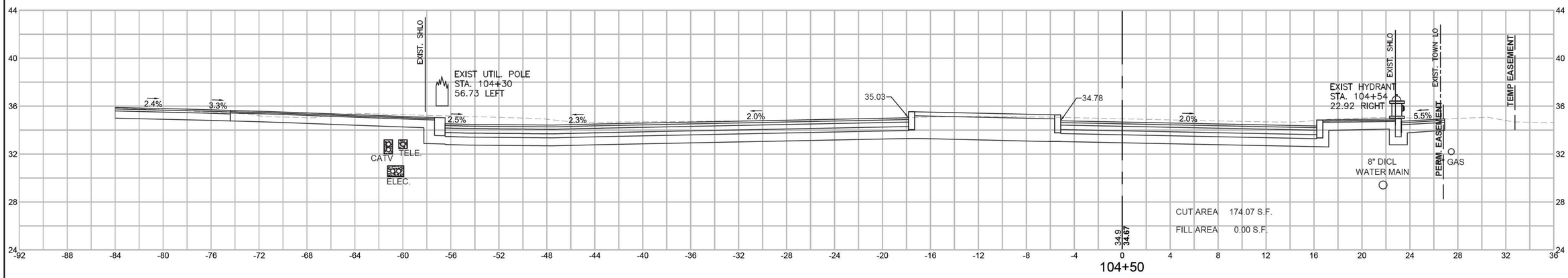

HOR. SCALE IN FEET
4 0 4 8
4 0 4 8
VER. SCALE IN FEET

BARNSTABLE
IYANNOUGH RD (RTE 28) AND YARMOUTH RD

STATE	FED. AID PROJ. NO.	SHEET NO.	TOTAL SHEETS
MA	TAP/HSI/CMQ/STP/NFP(NI)-0035(043)	200	231
PROJECT FILE NO.	606272		

CROSS SECTIONS - ROUTE 28

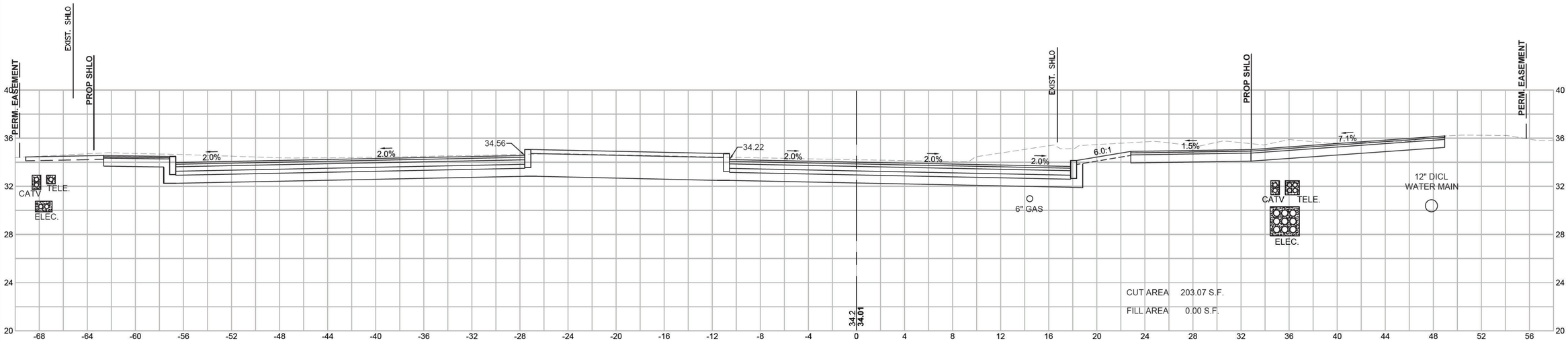

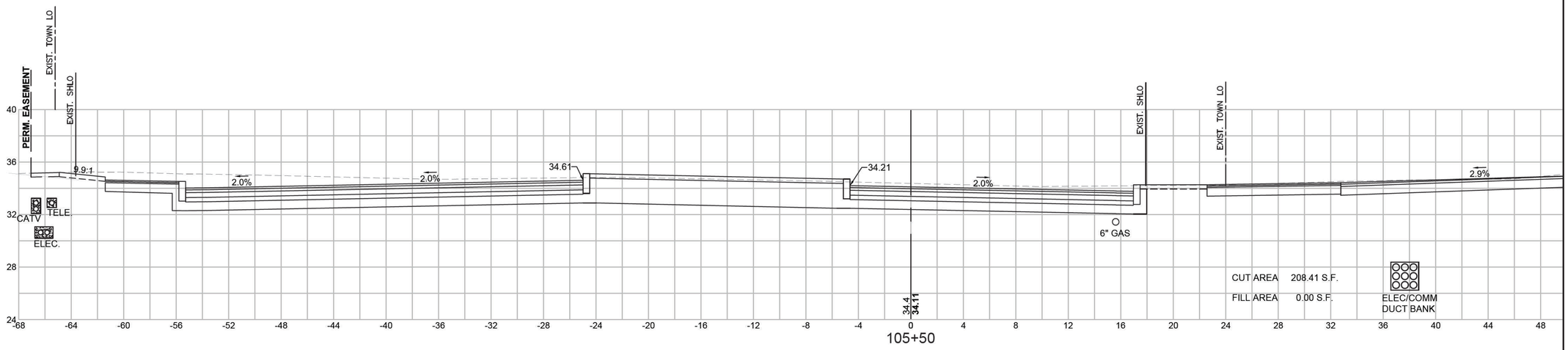

HOR. SCALE IN FEET
4 0 4 8
4 0 4 8
VER. SCALE IN FEET

606272_HD12(XSEC RT28).DWG Plotted on 10-Apr-2021 6:55 PM

BARNSTABLE
IYANNOUGH RD (RTE 28) AND YARMOUTH RD

STATE	FED. AID PROJ. NO.	SHEET NO.	TOTAL SHEETS
MA	TAP/HSI/CMQ/STP/NFP(NI)-0035(043)	201	231
PROJECT FILE NO.	606272		

CROSS SECTIONS - ROUTE 28

606272_HD12(XSEC RT28).DWG Plotted on 10-Apr-2021 6:57 PM

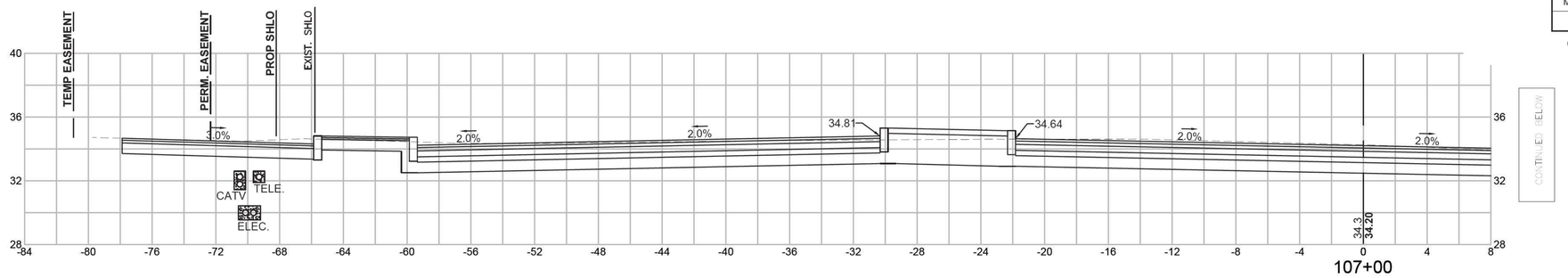

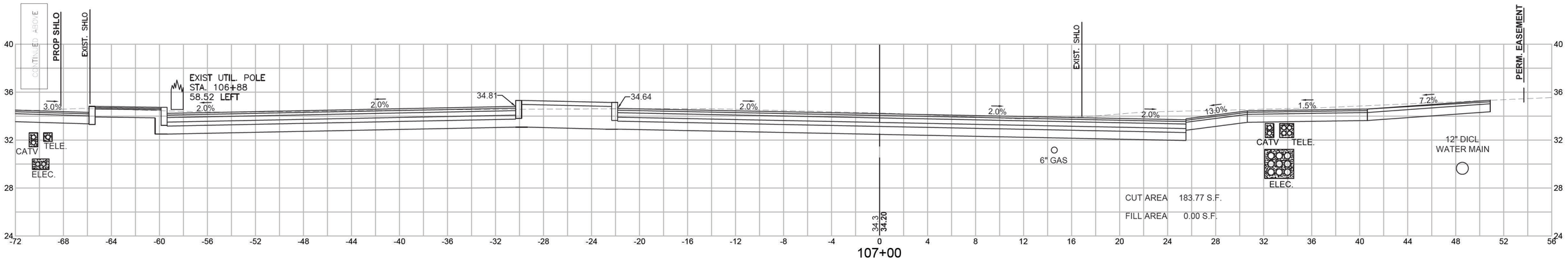

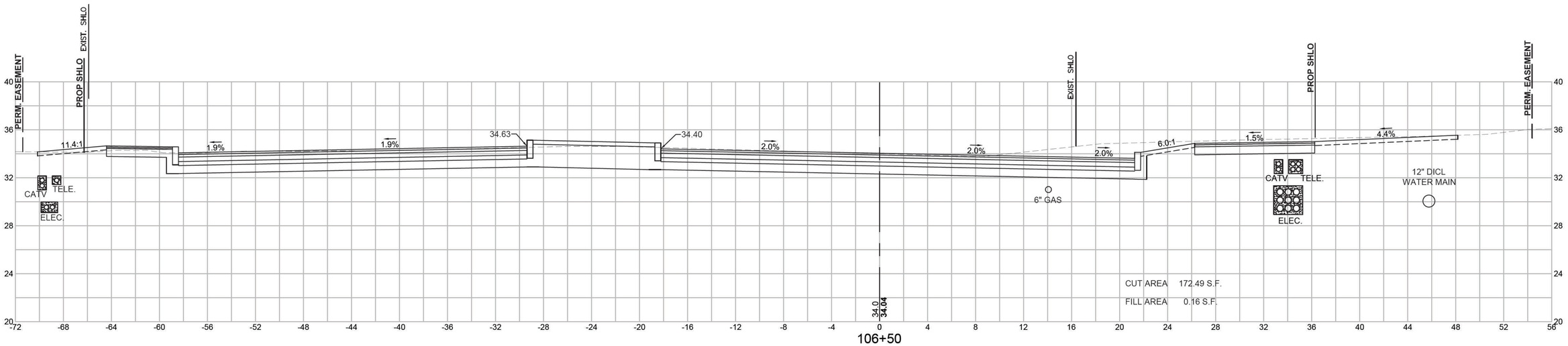

HOR. SCALE IN FEET
4 0 4 8
4 0 4 8
VER. SCALE IN FEET

BARNSTABLE
IYANNOUGH RD (RTE 28) AND YARMOUTH RD

STATE	FED. AID PROJ. NO.	SHEET NO.	TOTAL SHEETS
MA	TAP/HSI/CMQ/STP/NFP(NI)-0035(043)	202	231
PROJECT FILE NO.	606272		

CROSS SECTIONS - ROUTE 28

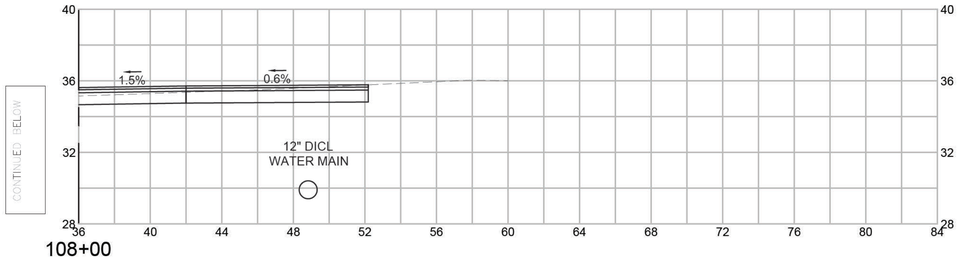

108+00

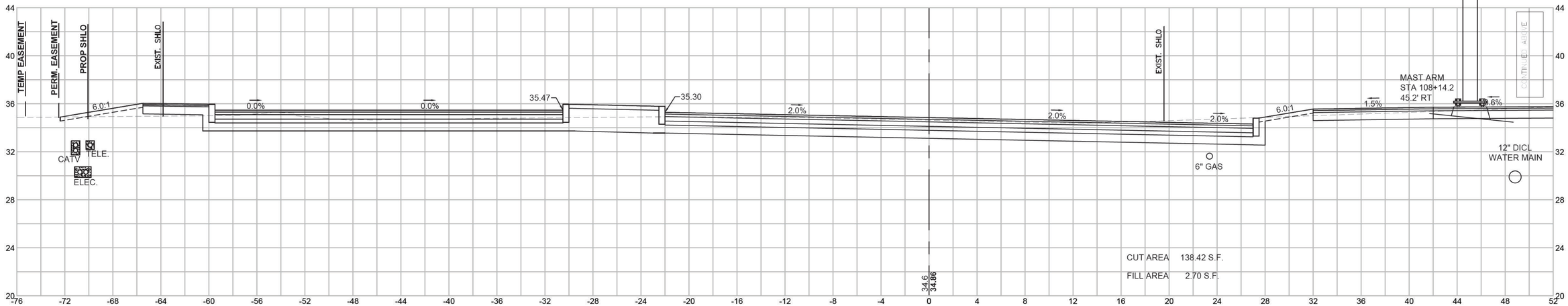

108+00

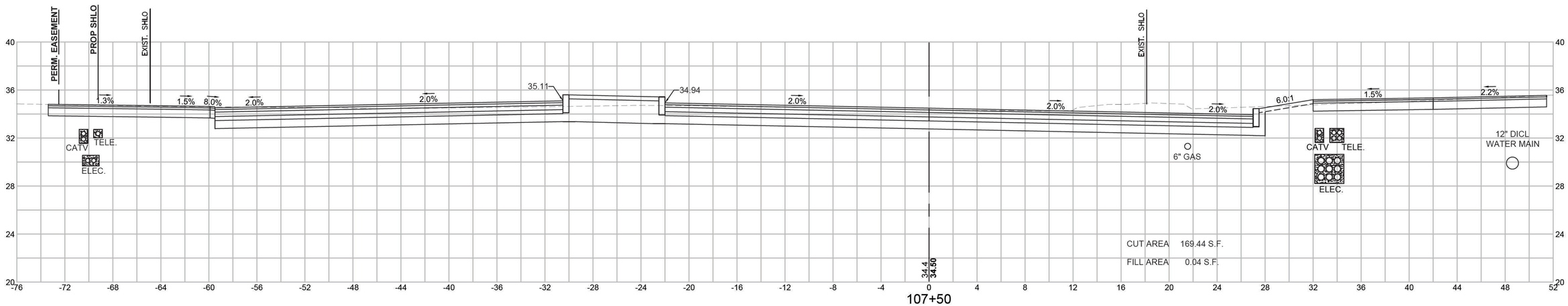

107+50

HOR. SCALE IN FEET
4 0 4 8
4 0 4 8
VER. SCALE IN FEET

606272_HD12(XSEC RT28).DWG Plotted on 10-Apr-2021 6:58 PM

BARNSTABLE
IYANNOUGH RD (RTE 28) AND YARMOUTH RD

STATE	FED. AID PROJ. NO.	SHEET NO.	TOTAL SHEETS
MA	TAP/HSI/CMQ/STP/NFP(NI)-0035(043)	203	231
PROJECT FILE NO.	606272		

CROSS SECTIONS - ROUTE 28

Plotted on 11-Apr-2021 9:50 AM
606272_HD12(XSEC RT28).DWG

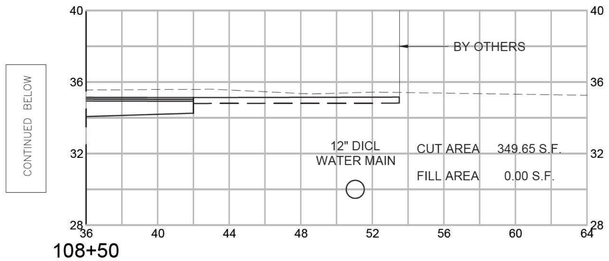

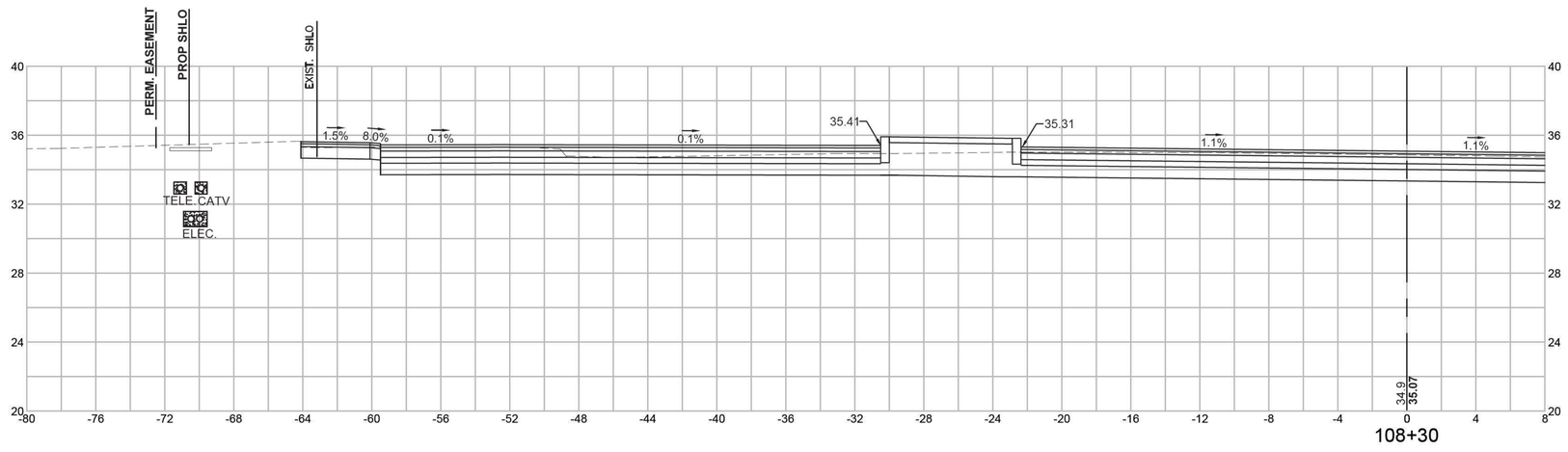

HOR. SCALE IN FEET
4 0 4 8
4 0 4 8
VER. SCALE IN FEET

BARNSTABLE
IYANNOUGH RD (RTE 28) AND YARMOUTH RD

STATE	FED. AID PROJ. NO.	SHEET NO.	TOTAL SHEETS
MA	TAP/HSI/CMQ/STP/NFP(M1)-0035(043)	204	231
PROJECT FILE NO.	606272		

CROSS SECTIONS - ROUTE 28

606272_HD12(XSEC RT28).DWG Plotted on 30-Nov-2020 10:17 AM

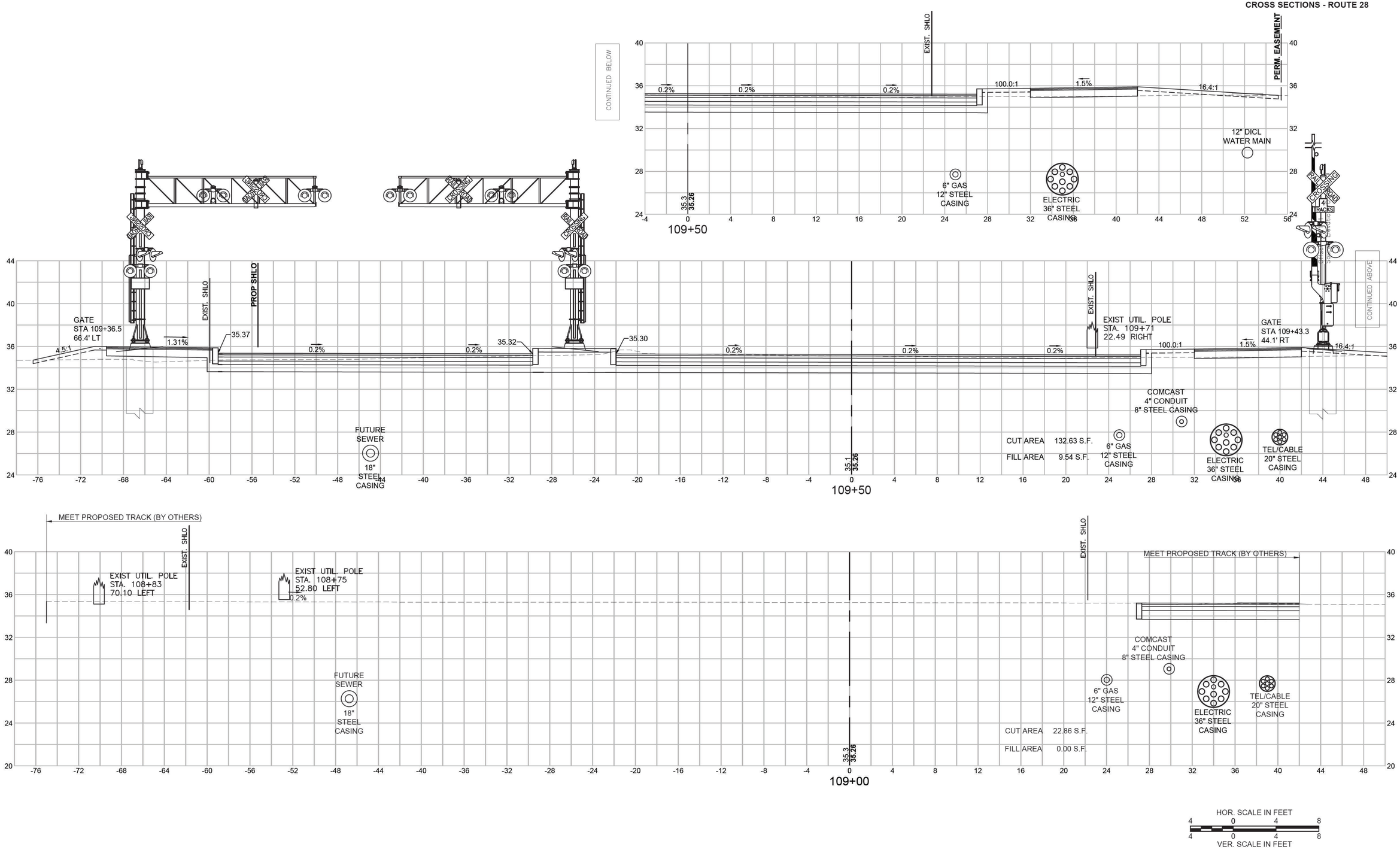

BARNSTABLE
IYANNOUGH RD (RTE 28) AND YARMOUTH RD

STATE	FED. AID PROJ. NO.	SHEET NO.	TOTAL SHEETS
MA	TAP/HSI/CMQ/STP/NFP(NI)-0035(043)	205	231
PROJECT FILE NO.	606272		

CROSS SECTIONS - ROUTE 28

Plotted on 30-Nov-2020 10:19 AM
606272_HD12(XSEC RT28).DWG

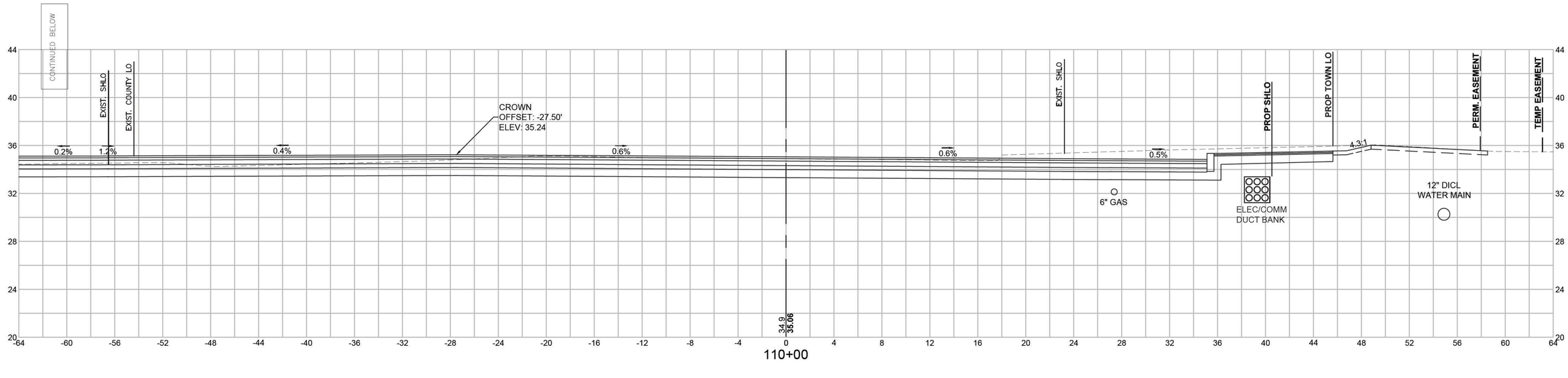

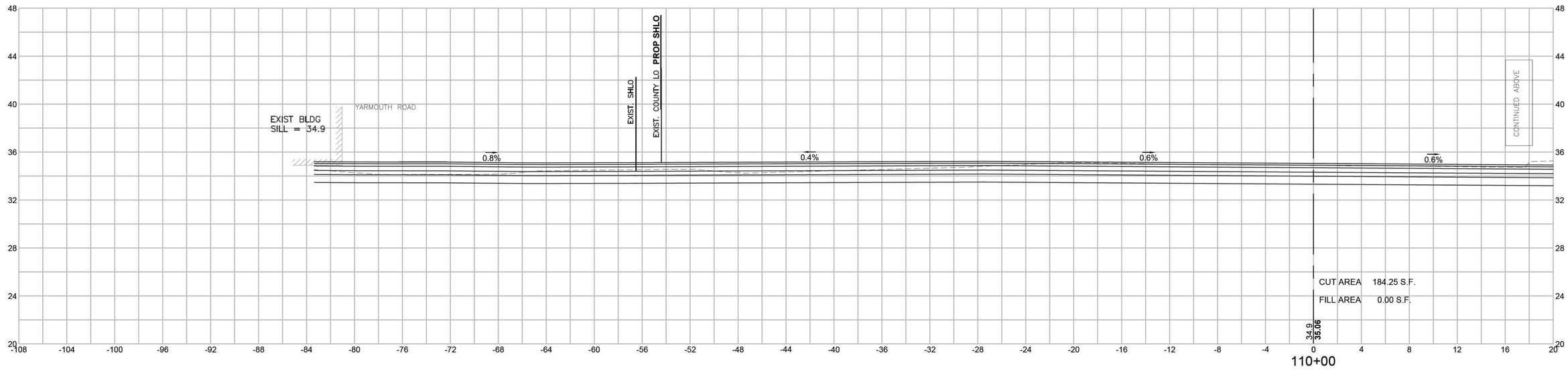

HOR. SCALE IN FEET
4 0 4 8
4 0 4 8
VER. SCALE IN FEET

BARNSTABLE
IYANNOUGH RD (RTE 28) AND YARMOUTH RD

STATE	FED. AID PROJ. NO.	SHEET NO.	TOTAL SHEETS
MA	TAP/HSI/CMQ/STP/NFP(NI)-0035(043)	206	231
PROJECT FILE NO.	606272		

CROSS SECTIONS - ROUTE 28

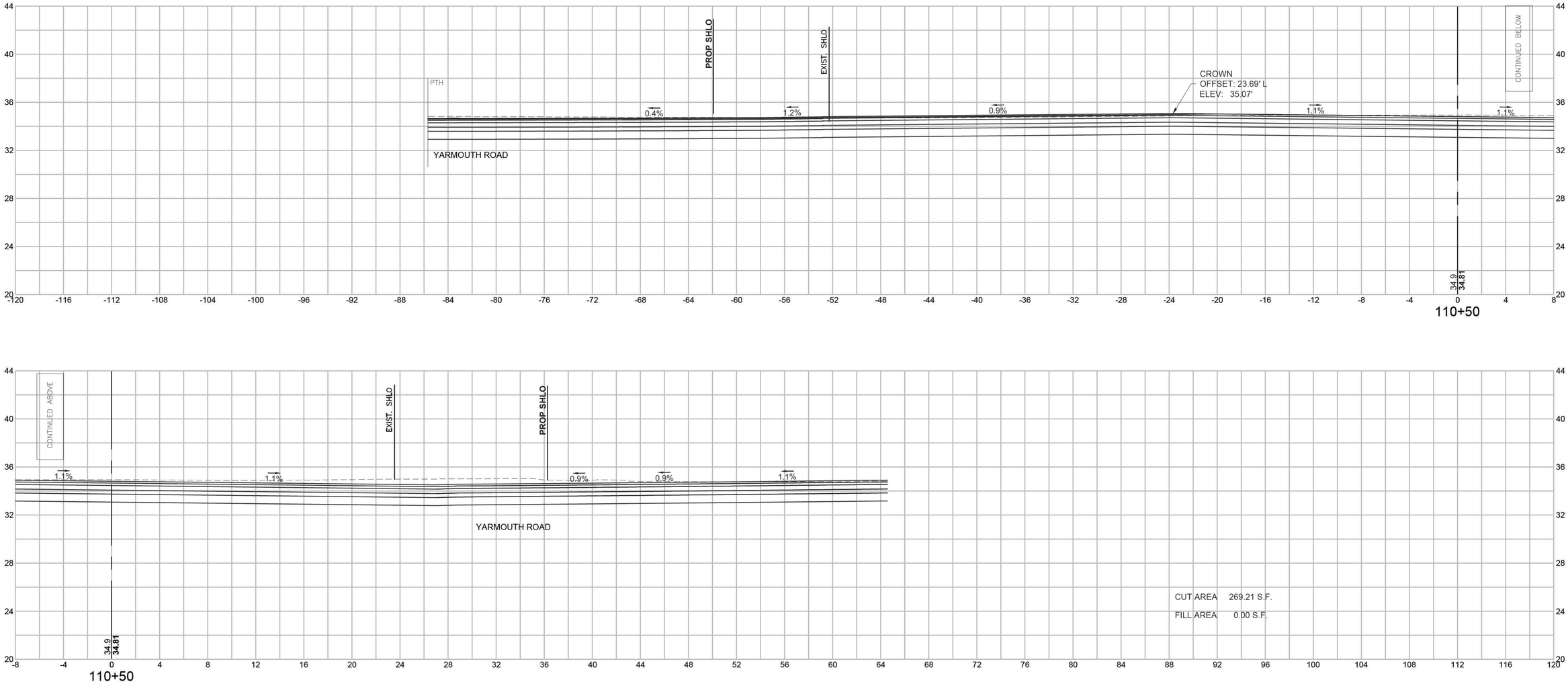

HOR. SCALE IN FEET
4 0 4 8
4 0 4 8
VER. SCALE IN FEET

606272_HD12(XSEC RT28).DWG Plotted on 30-Nov-2020 10:32 AM

BARNSTABLE
IYANNOUGH RD (RTE 28) AND YARMOUTH RD

STATE	FED. AID PROJ. NO.	SHEET NO.	TOTAL SHEETS
MA	TAP/HSI/CMQ/STP/NFP(NI)-0035(043)	207	231
PROJECT FILE NO.	606272		

CROSS SECTIONS - ROUTE 28

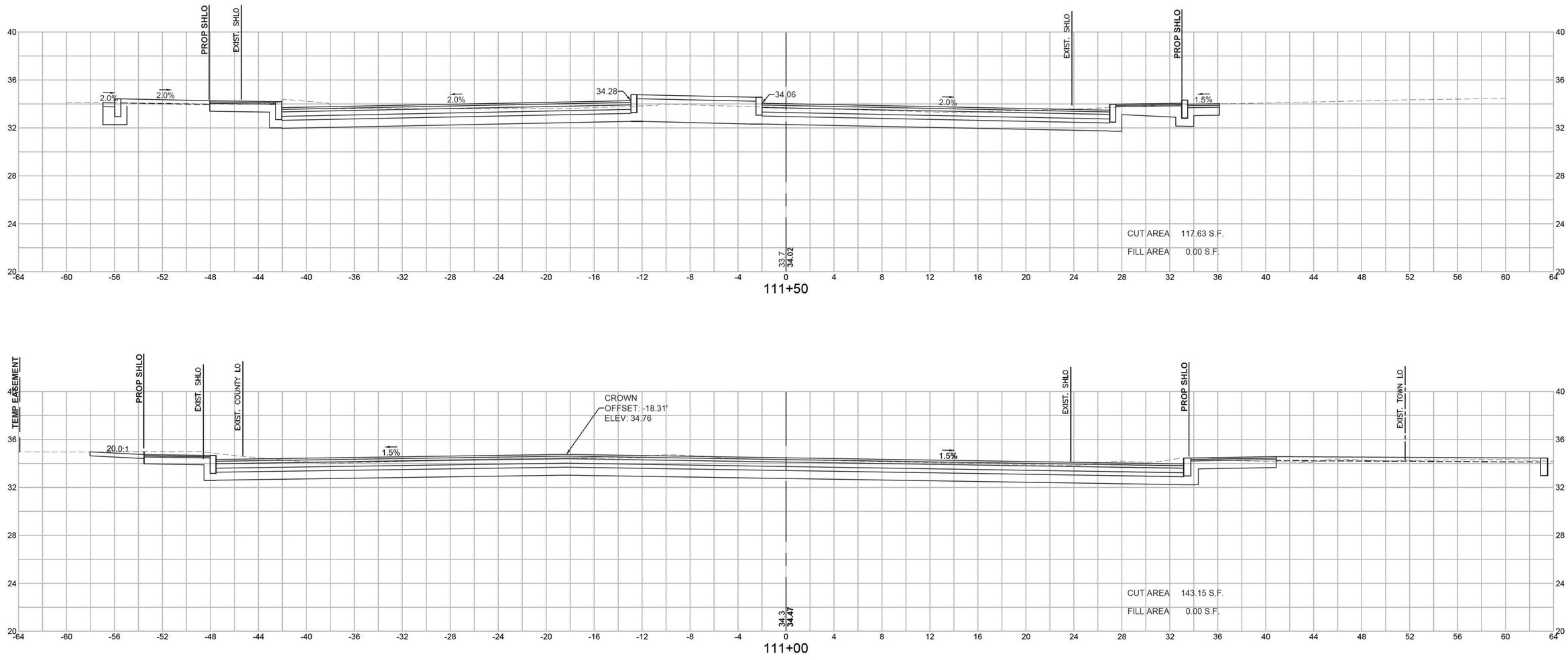

HOR. SCALE IN FEET
4 0 4 8
4 0 4 8
VER. SCALE IN FEET

606272_HD12(XSEC RT28).DWG Plotted on 30-Nov-2020 10:35 AM

BARNSTABLE
IYANNOUGH RD (RTE 28) AND YARMOUTH RD

STATE	FED. AID PROJ. NO.	SHEET NO.	TOTAL SHEETS
MA	TAP/HSI/CMQ/STP/NFP(NI)-0035(043)	208	231
PROJECT FILE NO.	606272		

CROSS SECTIONS - ROUTE 28

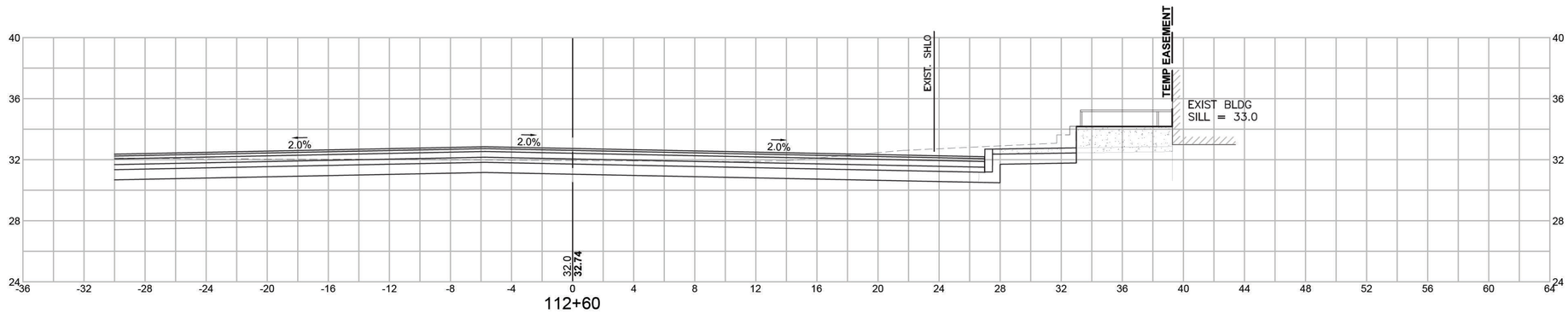

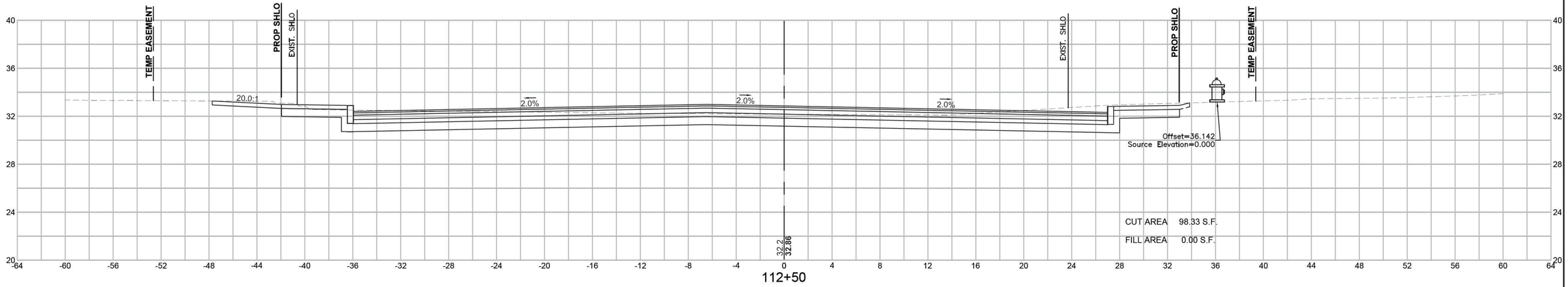

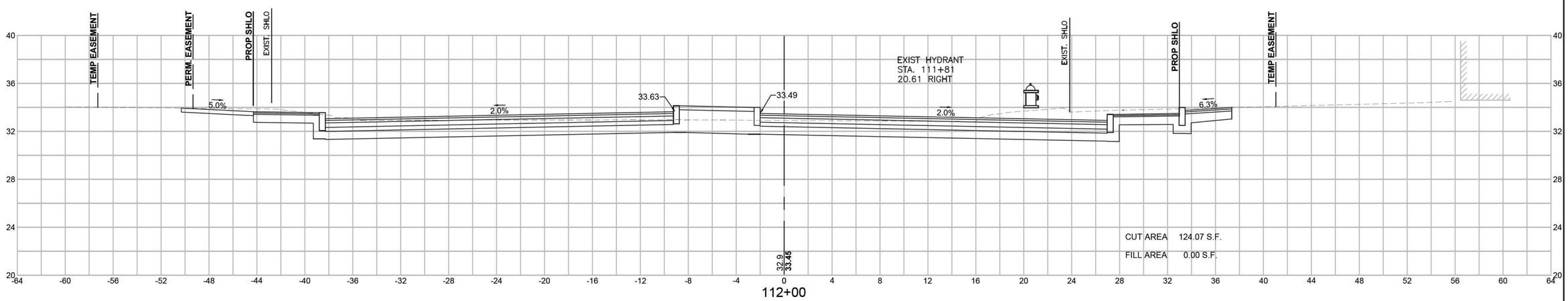

HOR. SCALE IN FEET
4 0 4 8
4 0 4 8
VER. SCALE IN FEET

606272_HD12(XSEC RT28).DWG Plotted on 30-Nov-2020 10:46 AM

BARNSTABLE
IYANNOUGH RD (RTE 28) AND YARMOUTH RD

STATE	FED. AID PROJ. NO.	SHEET NO.	TOTAL SHEETS
MA	TAP/HSI/CMQ/STP/NFP(NI)-0035(043)	209	231
PROJECT FILE NO.	606272		

CROSS SECTIONS - ROUTE 28

606272_HD12(XSEC RT28).DWG Plotted on 30-Nov-2020 10:46 AM

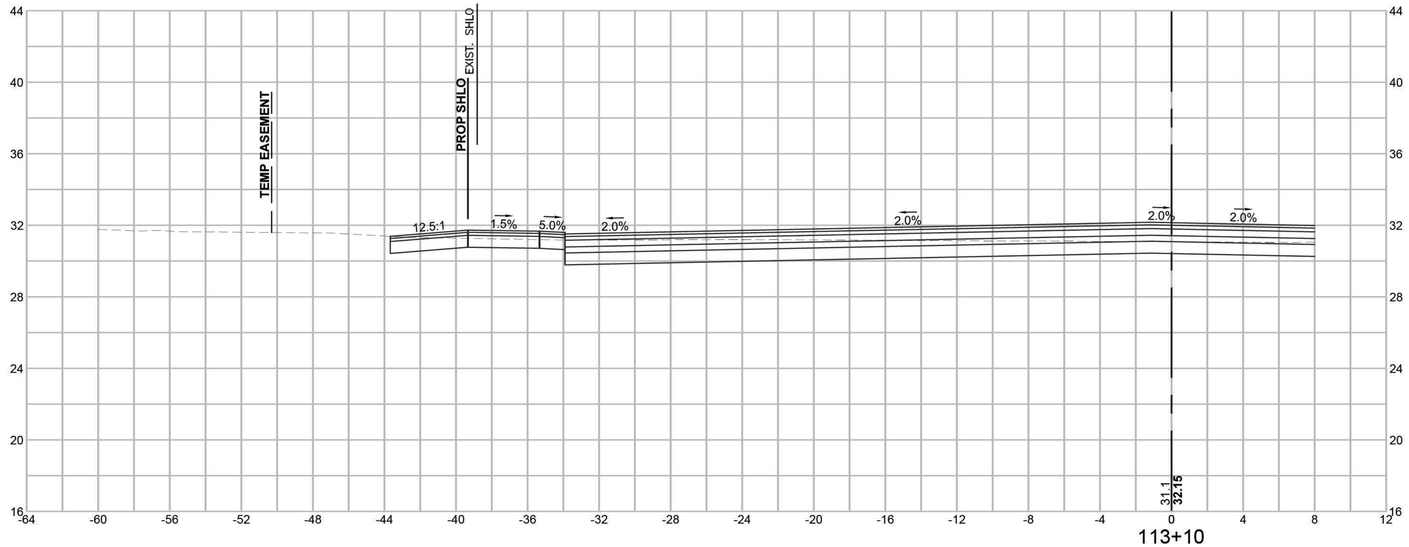

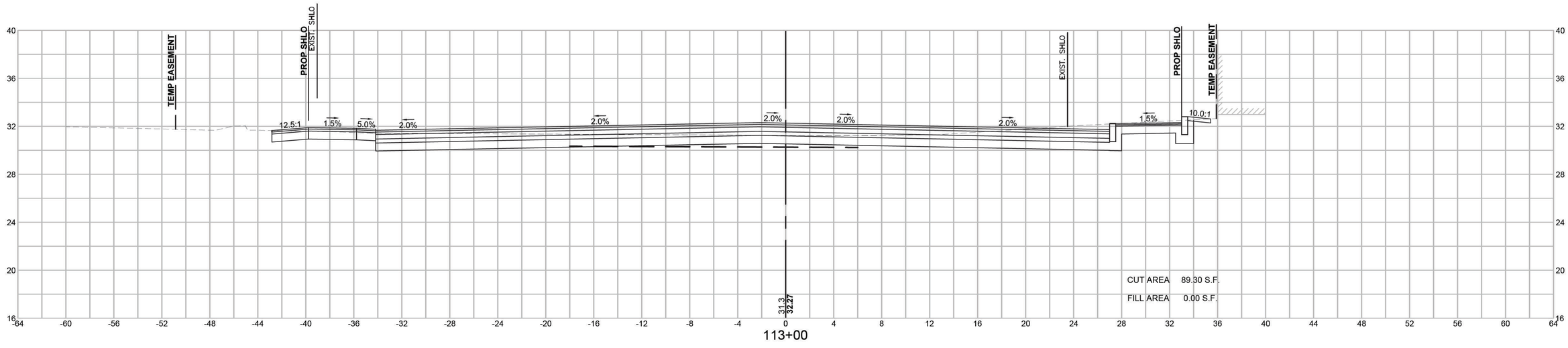

BARNSTABLE
IYANNOUGH RD (RTE 28) AND YARMOUTH RD

STATE	FED. AID PROJ. NO.	SHEET NO.	TOTAL SHEETS
MA	TAP/HSI/CMQ/STP/NFP(NI)-0035(043)	210	231
PROJECT FILE NO.	606272		

CROSS SECTIONS - ROUTE 28

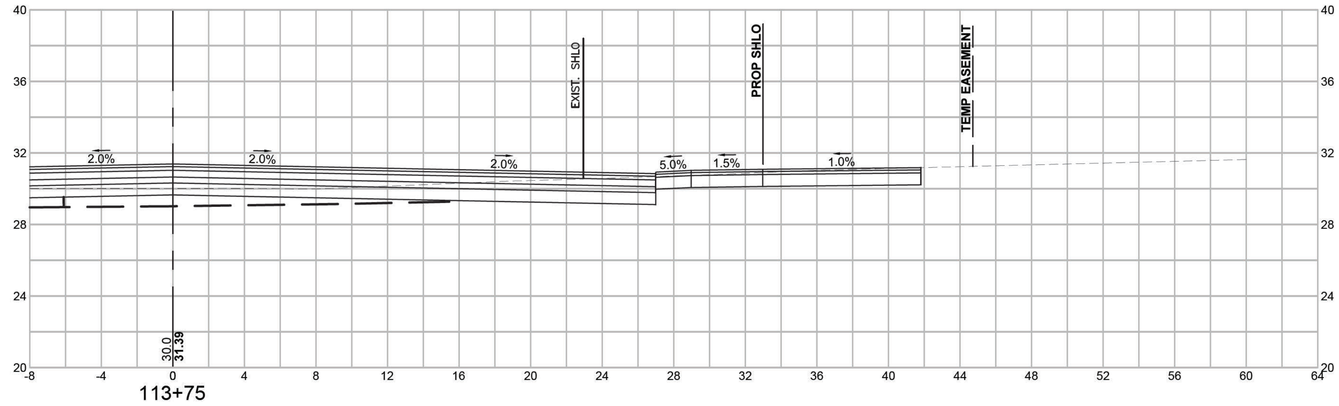

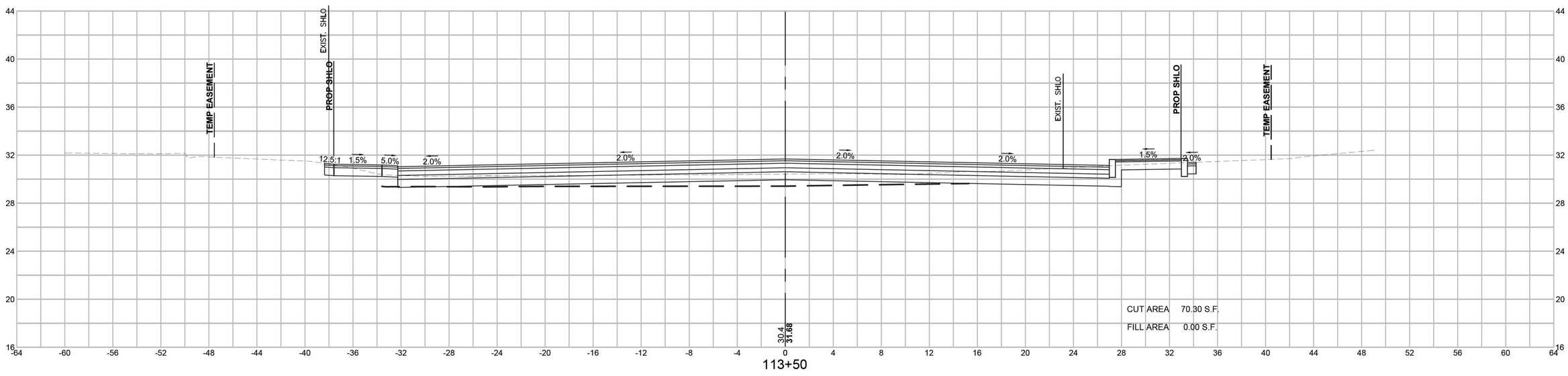

HOR. SCALE IN FEET
4 0 4 8
4 0 4 8
VER. SCALE IN FEET

606272_HD12(XSEC RT28).DWG Plotted on 30-Nov-2020 10:47 AM

BARNSTABLE
IYANNOUGH RD (RTE 28) AND YARMOUTH RD

STATE	FED. AID PROJ. NO.	SHEET NO.	TOTAL SHEETS
MA	TAP/HSI/CMQ/STP/NFP(NI)-0035(043)	211	231
PROJECT FILE NO.	606272		

CROSS SECTIONS - ROUTE 28

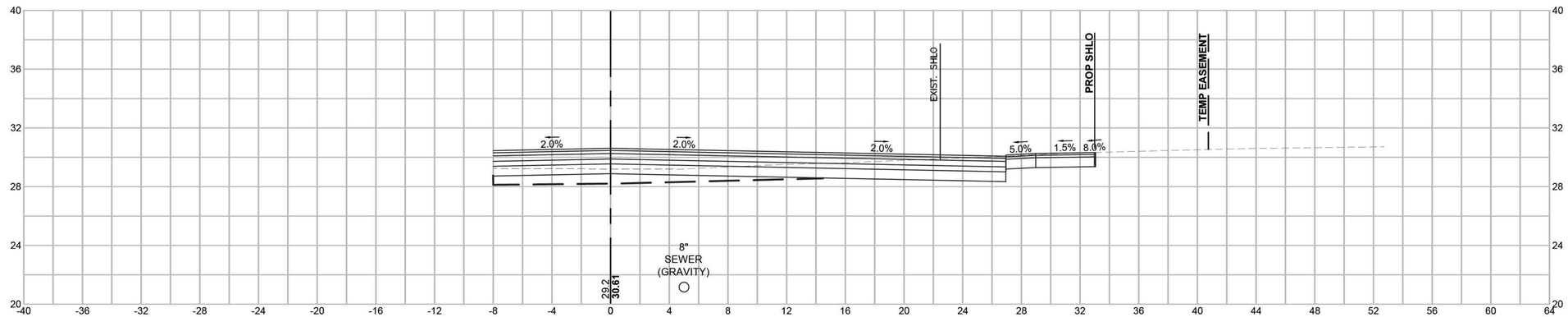

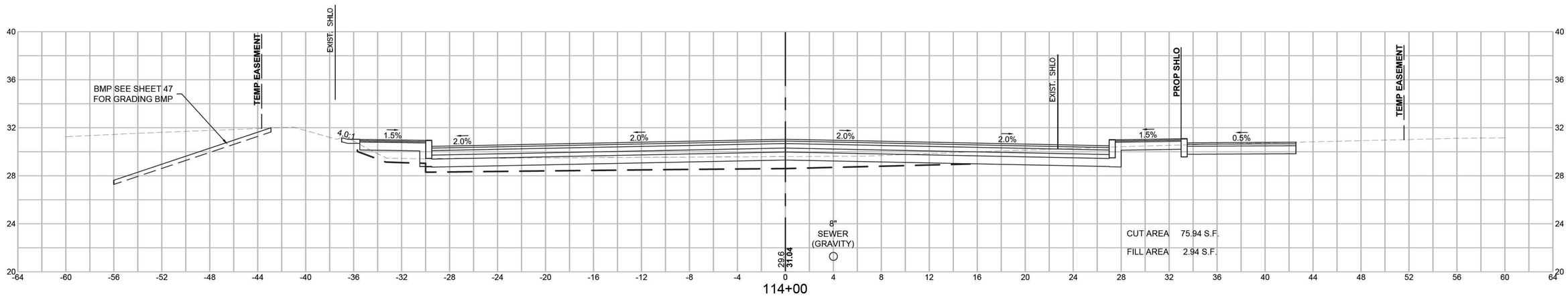

HOR. SCALE IN FEET
4 0 4 8
4 0 4 8
VER. SCALE IN FEET

606272_HD12(XSEC RT28).DWG Plotted on 30-Nov-2020 10:47 AM

BARNSTABLE
IYANNOUGH RD (RTE 28) AND YARMOUTH RD

STATE	FED. AID PROJ. NO.	SHEET NO.	TOTAL SHEETS
MA	TAP/HSI/CMQ/STP/NFP(NI)-0035(043)	212	231
PROJECT FILE NO.	606272		

CROSS SECTIONS - ROUTE 28

606272_HD12(XSEC RT28).DWG Plotted on 30-Nov-2020 10:48 AM

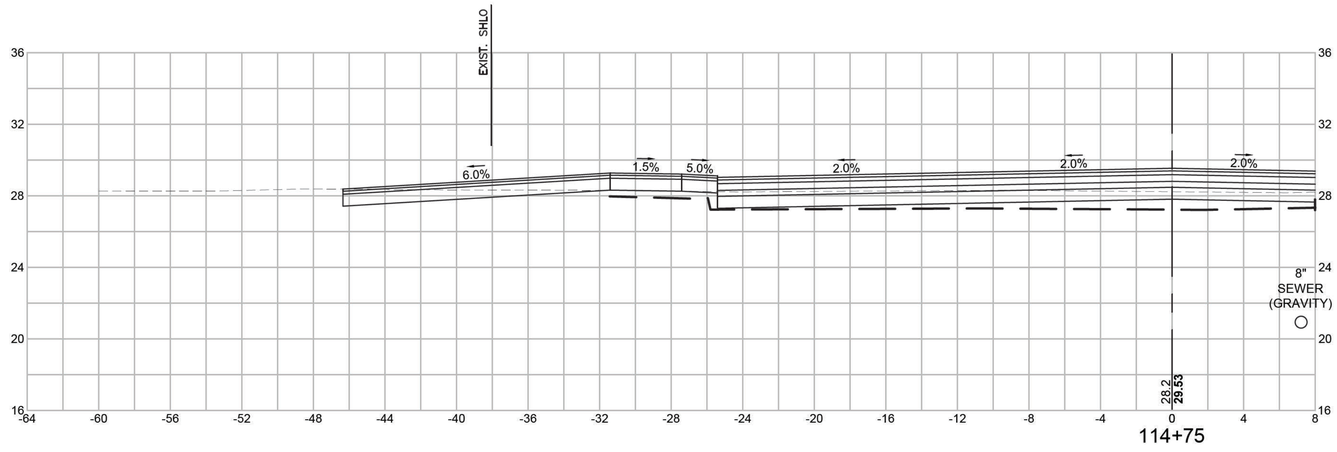

114+75

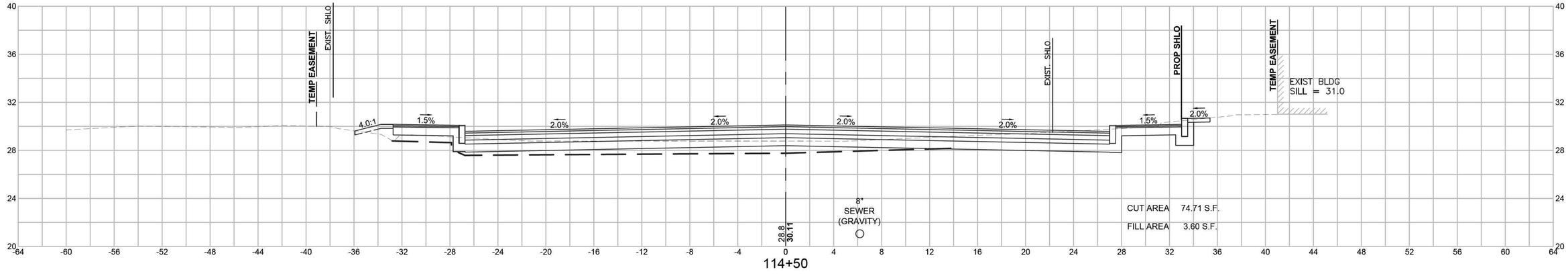

114+50

HOR. SCALE IN FEET
4 0 4 8
VER. SCALE IN FEET
4 0 4 8

BARNSTABLE
IYANNOUGH RD (RTE 28) AND YARMOUTH RD

STATE	FED. AID PROJ. NO.	SHEET NO.	TOTAL SHEETS
MA	TAP/HSI/CMQ/STP/NFP(NI)-0035(043)	213	231
PROJECT FILE NO.	606272		

CROSS SECTIONS - ROUTE 28

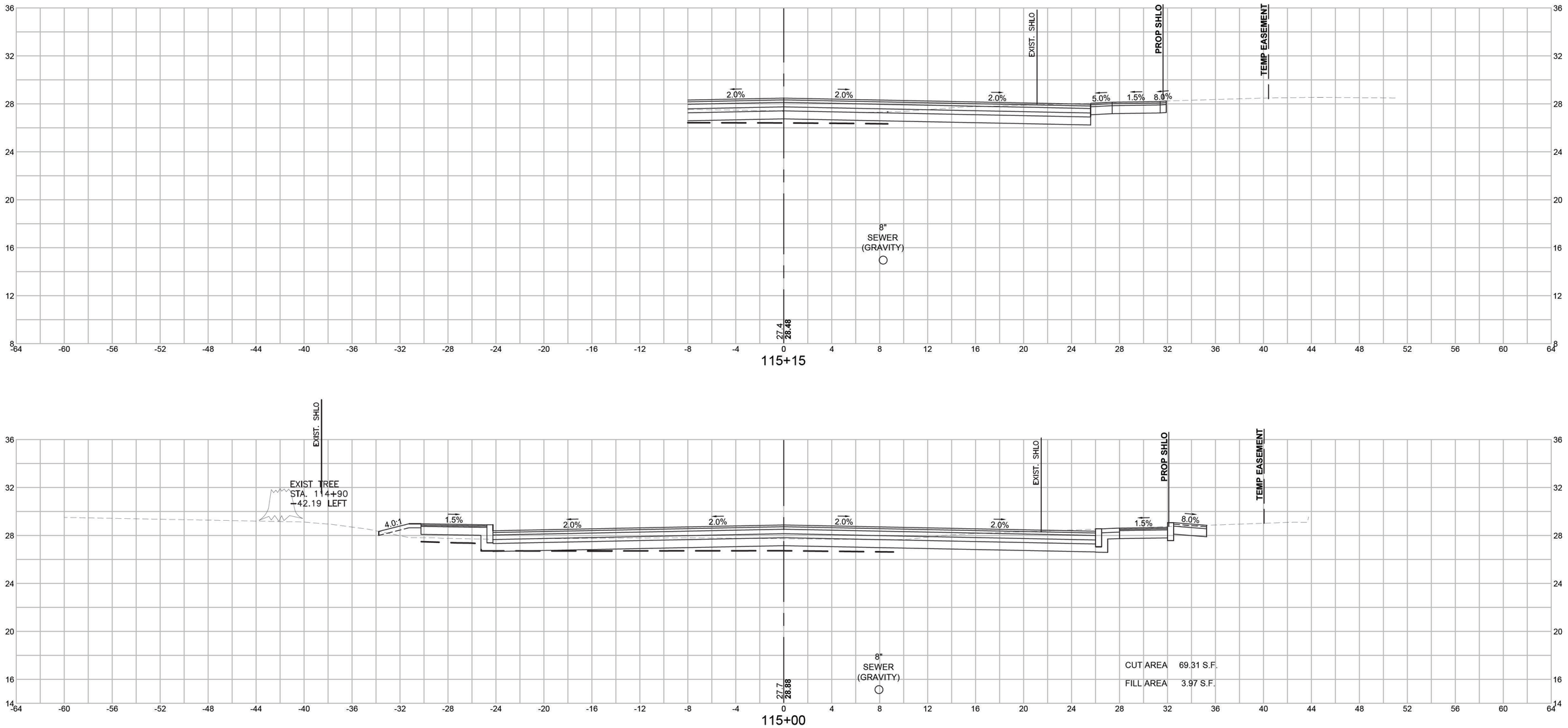

HOR. SCALE IN FEET
4 0 4 8
4 0 4 8
VER. SCALE IN FEET

606272_HD12(XSEC RT28).DWG Plotted on 30-Nov-2020 10:48 AM

BARNSTABLE
IYANNOUGH RD (RTE 28) AND YARMOUTH RD

STATE	FED. AID PROJ. NO.	SHEET NO.	TOTAL SHEETS
MA	TAP/HSI/CMQ/STP/NFP(NI)-0035(043)	214	231
PROJECT FILE NO.	606272		

CROSS SECTIONS - ROUTE 28

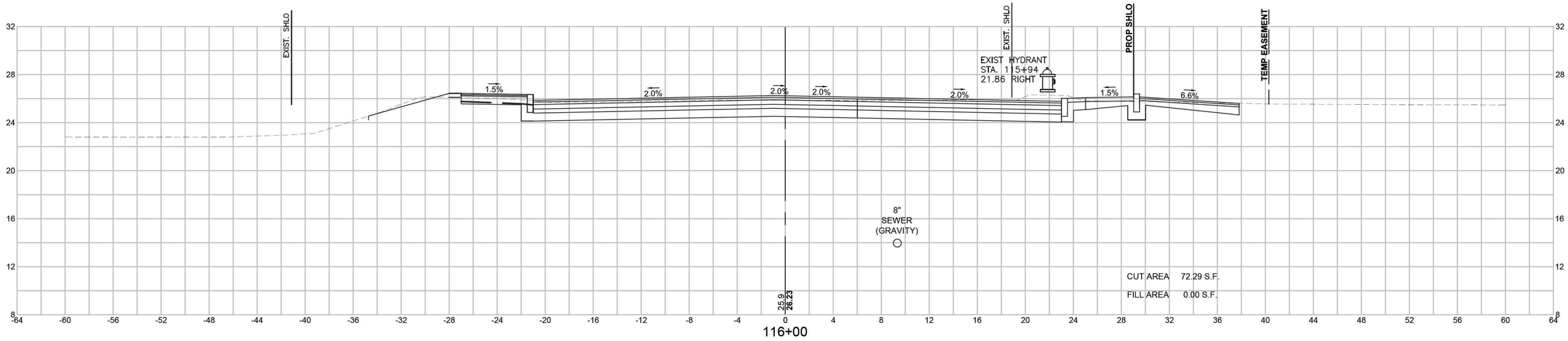

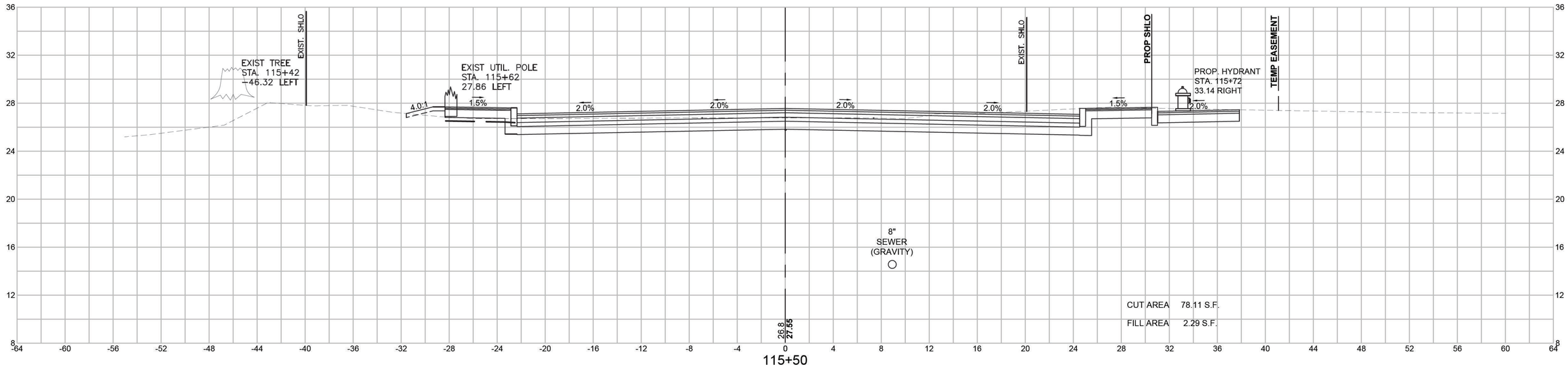

HOR. SCALE IN FEET
4 0 4 8
4 0 4 8
VER. SCALE IN FEET

606272_HD12(XSEC RT28).DWG Plotted on 30-Nov-2020 10:49 AM

BARNSTABLE
IYANNOUGH RD (RTE 28) AND YARMOUTH RD

STATE	FED. AID PROJ. NO.	SHEET NO.	TOTAL SHEETS
MA	TAP/HSI/CMQ/STP/NFP(NI)-0035(043)	215	231
PROJECT FILE NO.	606272		

CROSS SECTIONS - ROUTE 28

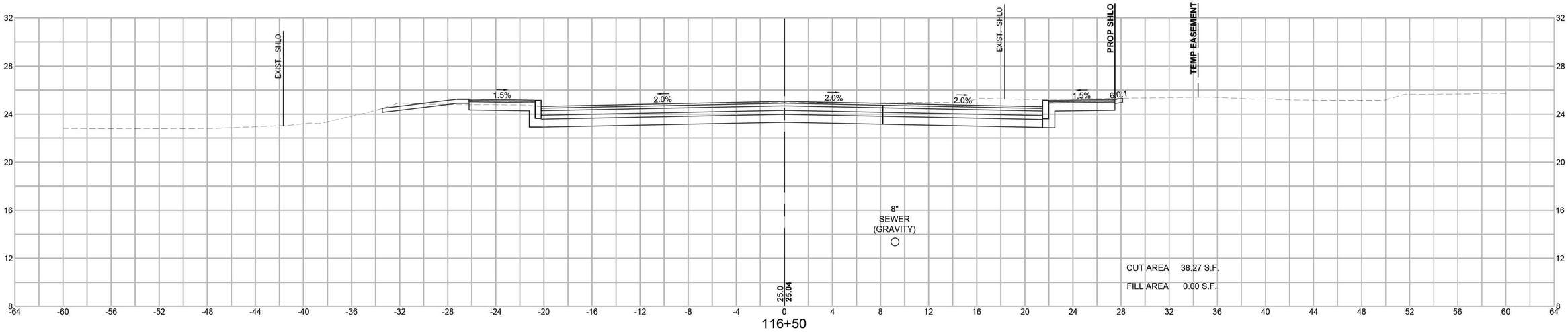

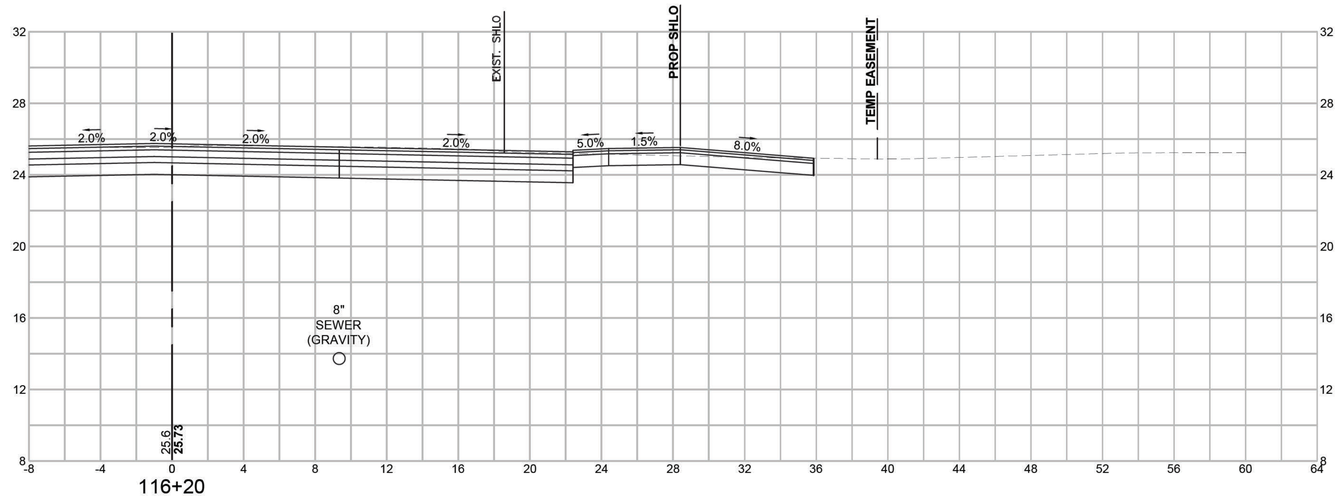

HOR. SCALE IN FEET
4 0 4 8
4 0 4 8
VER. SCALE IN FEET

606272_HD12(XSEC RT28).DWG Plotted on 30-Nov-2020 10:50 AM

BARNSTABLE
IYANNOUGH RD (RTE 28) AND YARMOUTH RD

STATE	FED. AID PROJ. NO.	SHEET NO.	TOTAL SHEETS
MA	TAP/HSI/CMQ/STP/NFP(NI)-0035(043)	216	231
PROJECT FILE NO.	606272		

CROSS SECTIONS - ROUTE 28

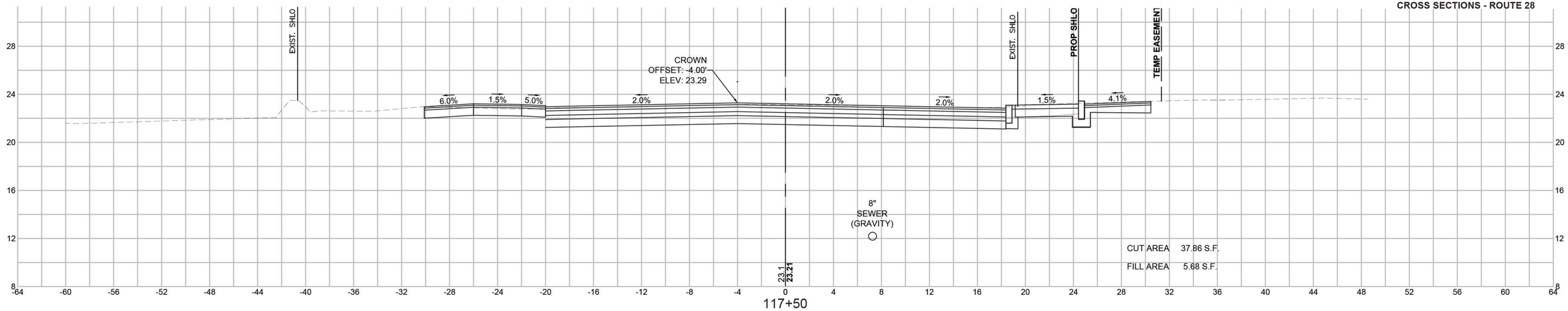

117+50

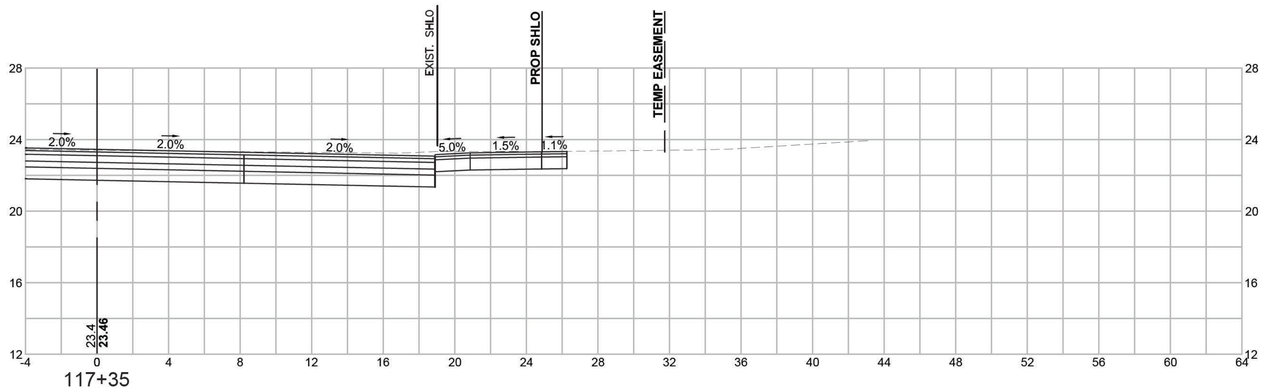

117+35

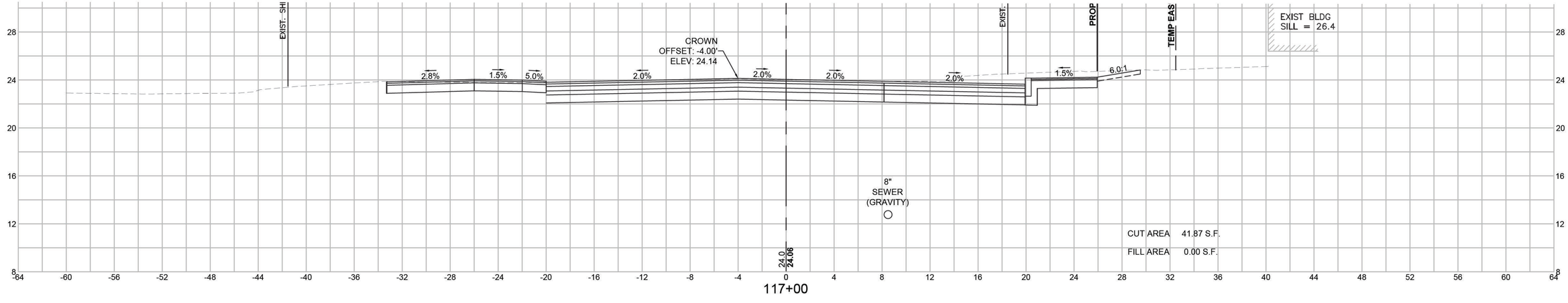

117+00

HOR. SCALE IN FEET
4 0 4 8
VER. SCALE IN FEET
4 0 4 8

606272_HD12(XSEC RT28).DWG Plotted on 30-Nov-2020 10:51 AM

BARNSTABLE
IYANNOUGH RD (RTE 28) AND YARMOUTH RD

STATE	FED. AID PROJ. NO.	SHEET NO.	TOTAL SHEETS
MA	TAP/HSI/CMQ/STP/NFP(NI)-0035(043)	217	231
PROJECT FILE NO.	606272		

CROSS SECTIONS - ROUTE 28

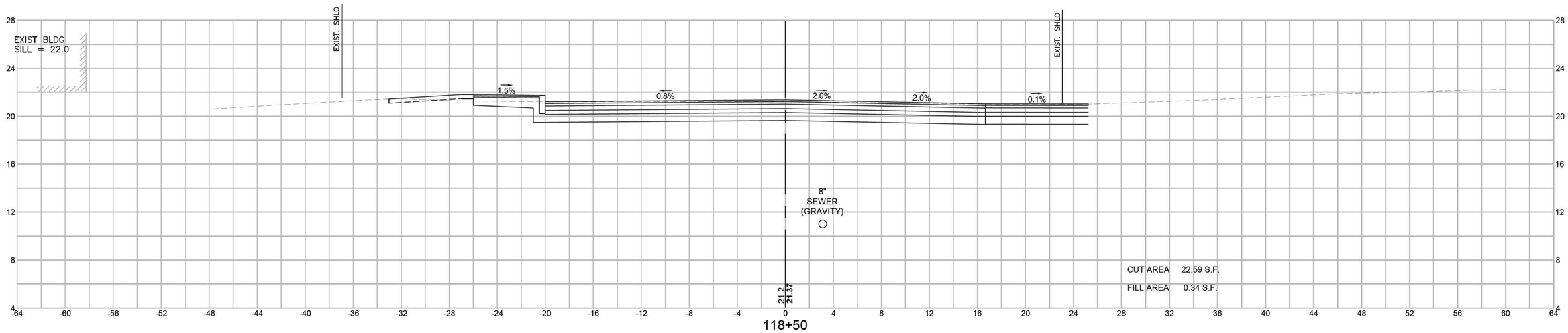

118+50

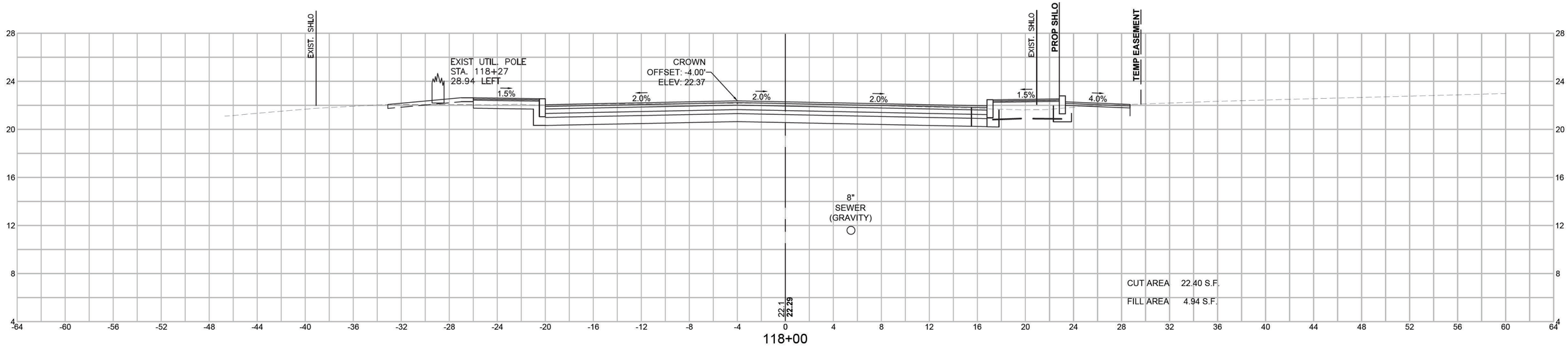

118+00

HOR. SCALE IN FEET
4 0 4 8
4 0 4 8
VER. SCALE IN FEET

606272_HD12(XSEC RT28).DWG Plotted on 30-Nov-2020 10:52 AM

BARNSTABLE
IYANNOUGH RD (RTE 28) AND YARMOUTH RD

STATE	FED. AID PROJ. NO.	SHEET NO.	TOTAL SHEETS
MA	TAP/HSI/CMQ/STP/NFP(NI)-0035(043)	218	231
PROJECT FILE NO.	606272		

CROSS SECTIONS - ROUTE 28

606272_HD12(XSEC RT28).DWG Plotted on 30-Nov-2020 10:52 AM

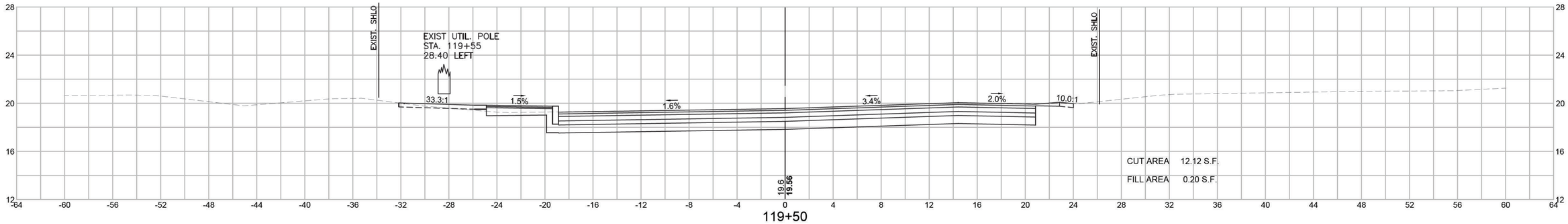

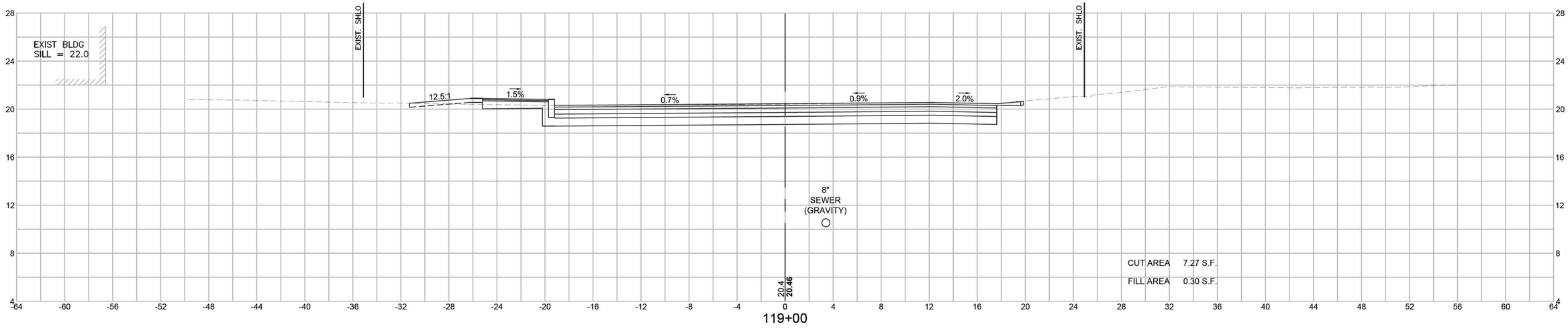

HOR. SCALE IN FEET
4 0 4 8
4 0 4 8
VER. SCALE IN FEET

BARNSTABLE
IYANNOUGH RD (RTE 28) AND YARMOUTH RD

STATE	FED. AID PROJ. NO.	SHEET NO.	TOTAL SHEETS
MA	TAP/HSI/CMQ/STP/NFP(NI)-0035(043)	219	231
PROJECT FILE NO.	606272		

CROSS SECTIONS - SIDE STREETS
YARMOUTH ROAD

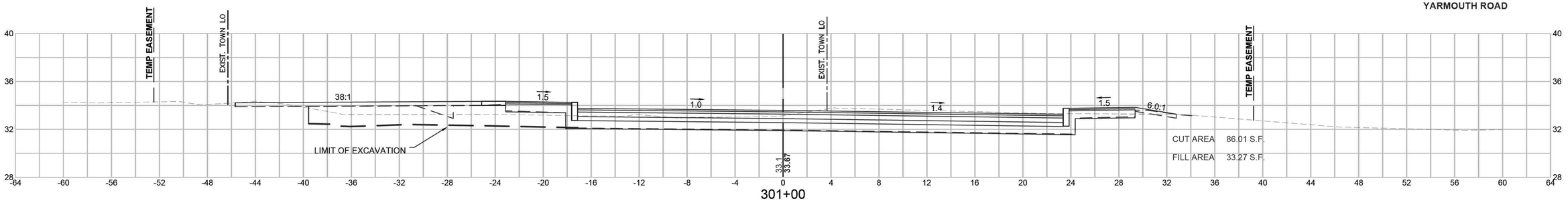

301+00

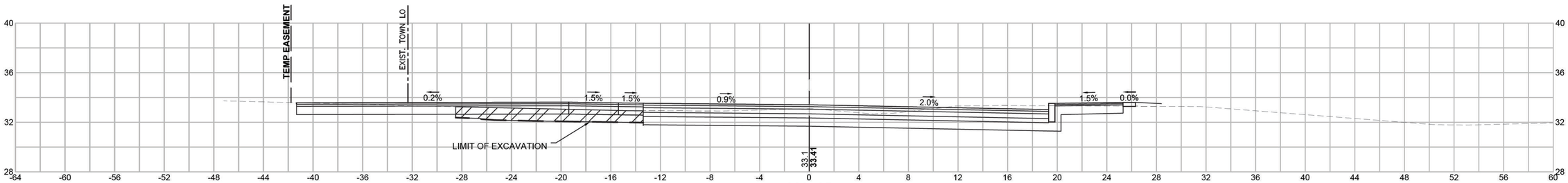

300+85

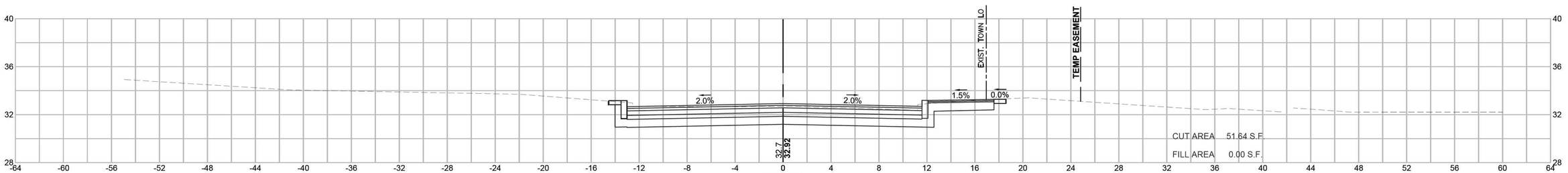

300+50

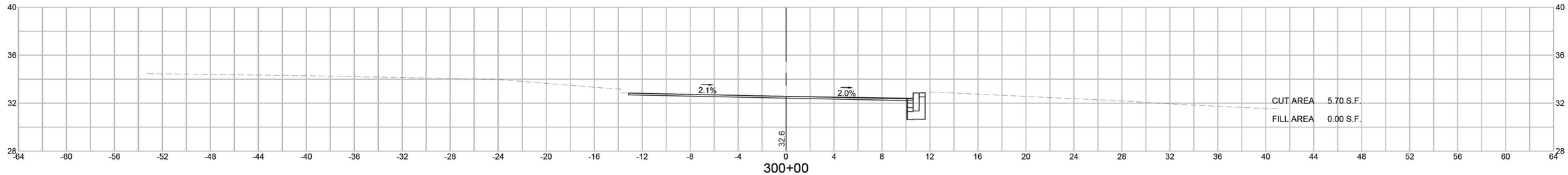

300+00

HOR. SCALE IN FEET
4 0 4 8
VER. SCALE IN FEET
4 0 4 8

606272_HD13(XSEC YARMOUTH).DWG Plotted on 30-Oct-2020 1:21 PM

BARNSTABLE
IYANNOUGH RD (RTE 28) AND YARMOUTH RD

STATE	FED. AID PROJ. NO.	SHEET NO.	TOTAL SHEETS
MA	TAP/HSI/CMQ/STP/NFP(NI)-0035(043)	220	231
PROJECT FILE NO.	606272		

CROSS SECTIONS - SIDE STREETS
YARMOUTH ROAD

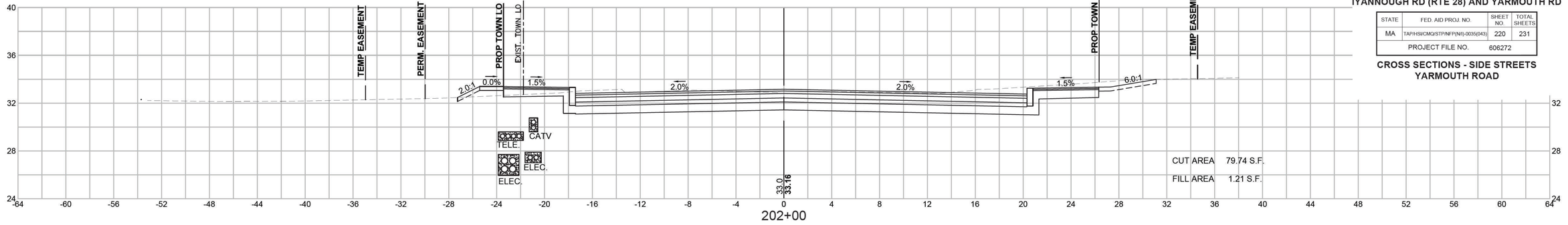

202+00

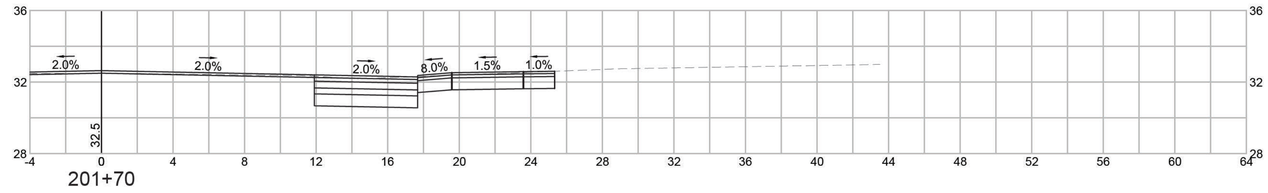

201+70

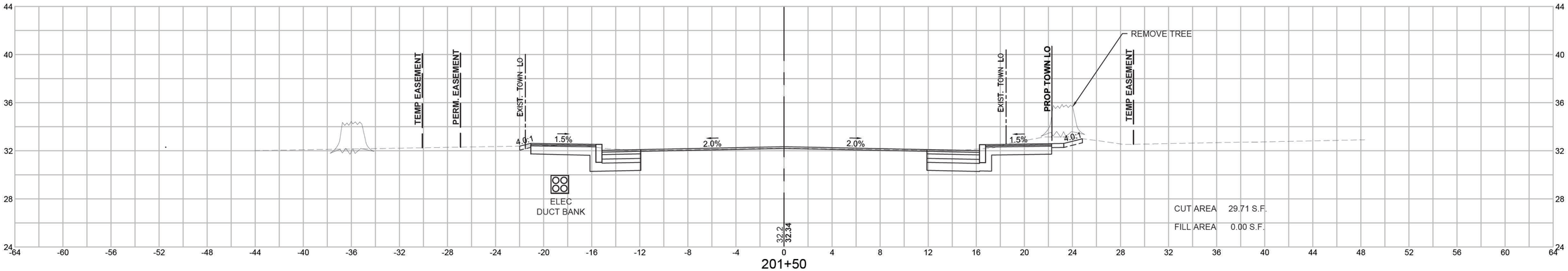

201+50

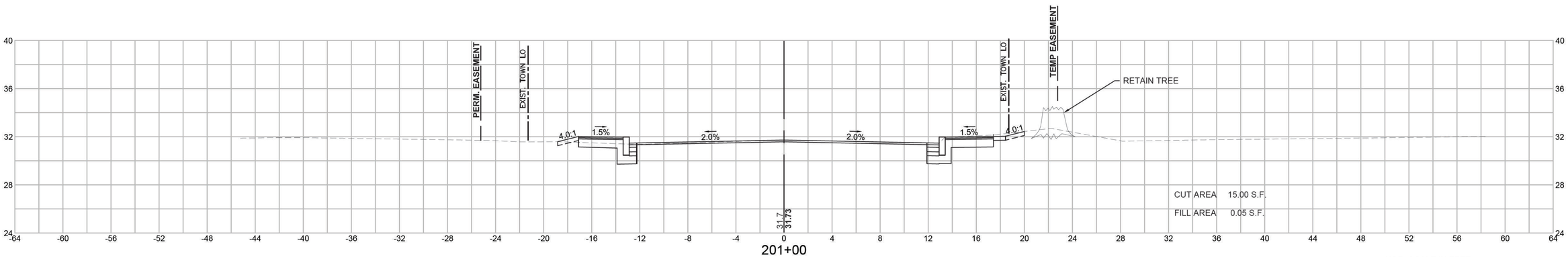

201+00

HOR. SCALE IN FEET
4 0 4 8
VER. SCALE IN FEET
4 0 4 8

606272_HD13(XSEC YARMOUTH).DWG Plotted on 30-Nov-2020 12:21 PM

BARNSTABLE
IYANNOUGH RD (RTE 28) AND YARMOUTH RD

STATE	FED. AID PROJ. NO.	SHEET NO.	TOTAL SHEETS
MA	TAP/HSI/CMQ/STP/NFP(NI)-0035(043)	221	231
PROJECT FILE NO.	606272		

CROSS SECTIONS - SIDE STREETS
YARMOUTH ROAD

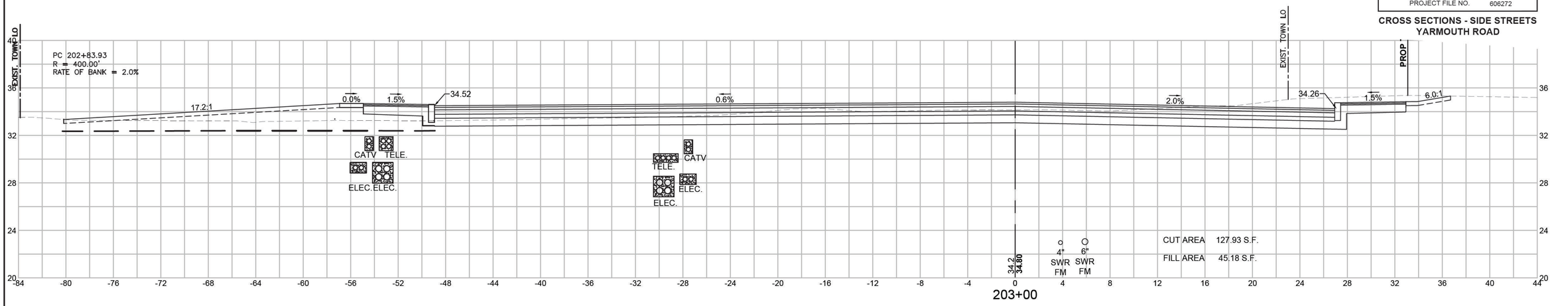

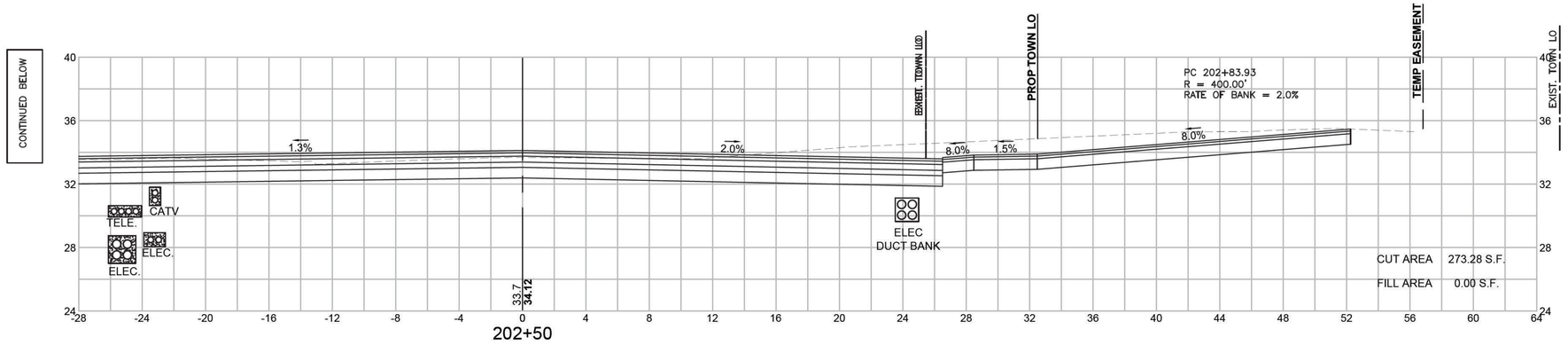

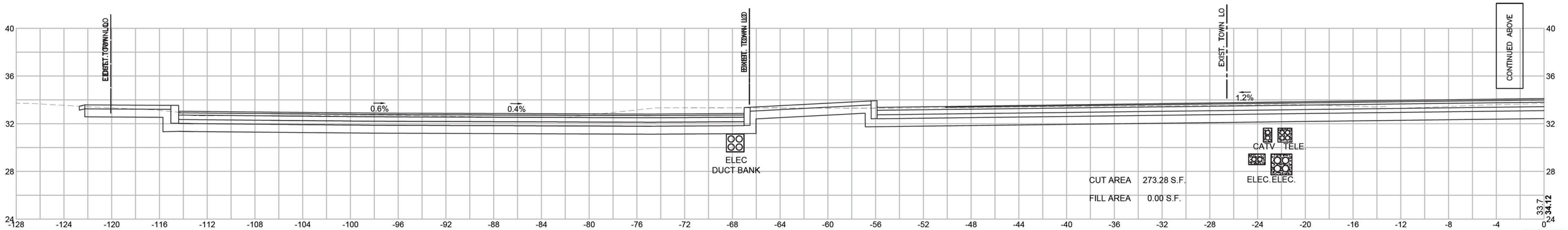

HOR. SCALE IN FEET
4 0 4 8
VER. SCALE IN FEET
4 0 4 8

606272_HD13(XSEC YARMOUTH).DWG Plotted on 30-Nov-2020 12:22 PM

BARNSTABLE
IYANNOUGH RD (RTE 28) AND YARMOUTH RD

STATE	FED. AID PROJ. NO.	SHEET NO.	TOTAL SHEETS
MA	TAP/HSI/CMQ/STP/NFP(NI)-0035(043)	222	231
PROJECT FILE NO.	606272		

CROSS SECTIONS - SIDE STREETS
YARMOUTH ROAD

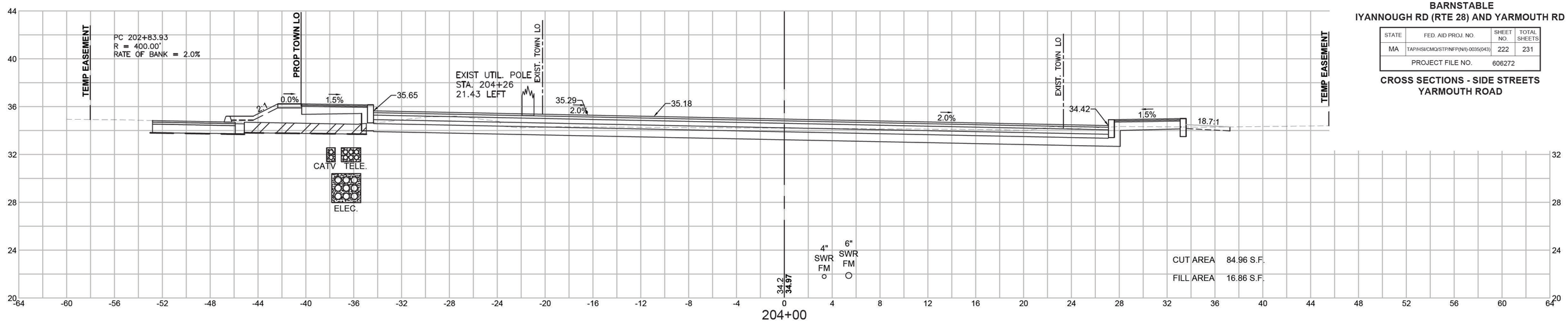

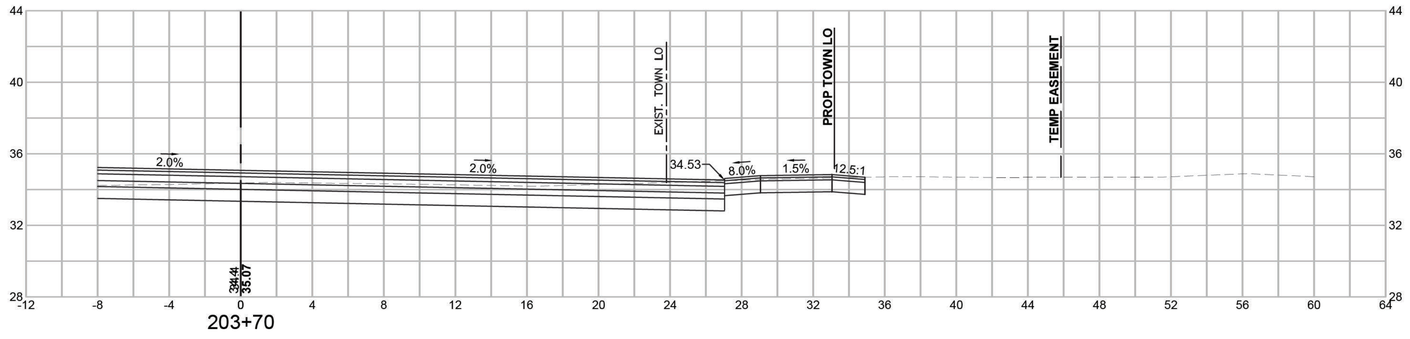

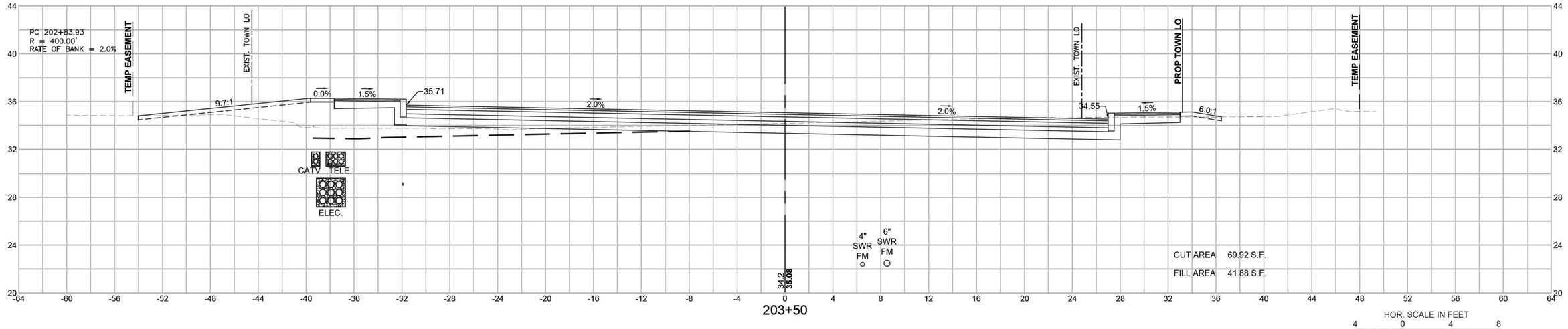

606272_HD13(XSEC YARMOUTH).DWG Plotted on 30-Nov-2020 12:23 PM

BARNSTABLE
IYANNOUGH RD (RTE 28) AND YARMOUTH RD

STATE	FED. AID PROJ. NO.	SHEET NO.	TOTAL SHEETS
MA	TAP/HSI/CMQ/STP/NFP(NI)-0035(043)	223	231
PROJECT FILE NO.	606272		

CROSS SECTIONS - SIDE STREETS
YARMOUTH ROAD

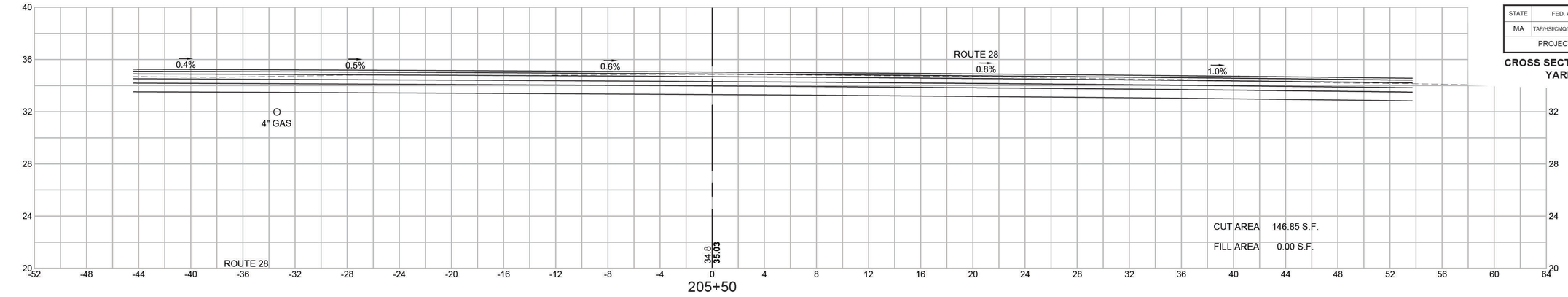

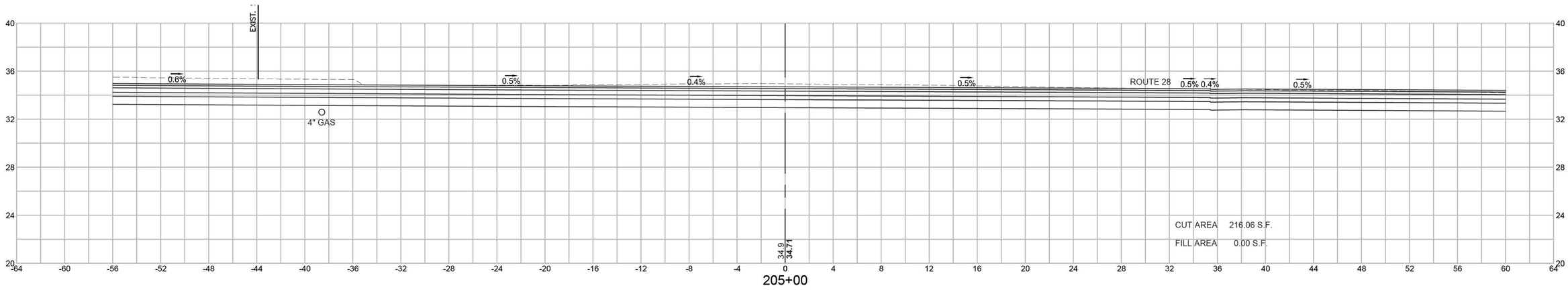

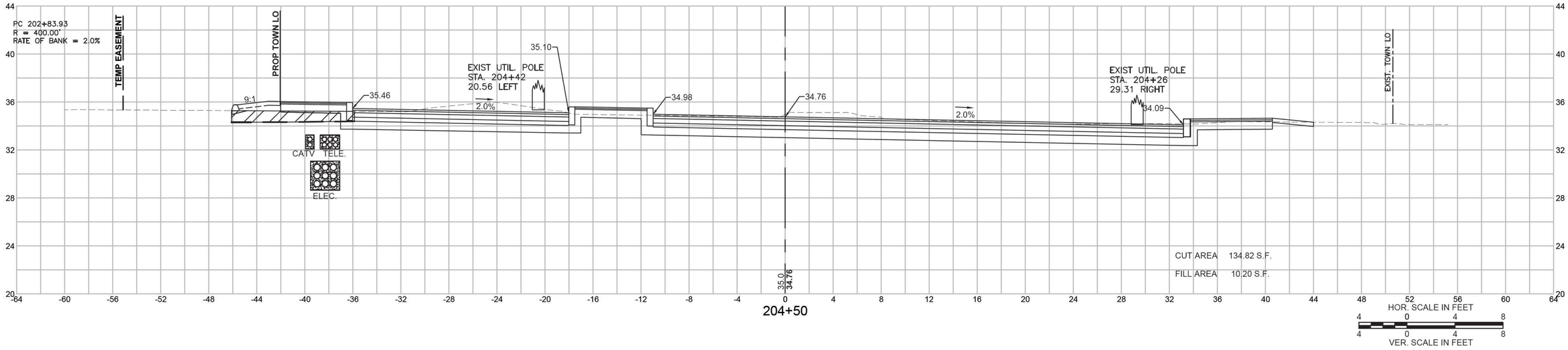

606272_HD13(XSEC YARMOUTH).DWG Plotted on 31-Mar-2021 9:19 AM

BARNSTABLE
IYANNOUGH RD (RTE 28) AND YARMOUTH RD

STATE	FED. AID PROJ. NO.	SHEET NO.	TOTAL SHEETS
MA	TAP/HSI/CMQ/STP/NFP(NI)-0035(043)	224	231
PROJECT FILE NO.	606272		

CROSS SECTIONS - SIDE STREETS
YARMOUTH ROAD

606272_HD13(XSEC YARMOUTH).DWG Plotted on 30-Nov-2020 12:25 PM

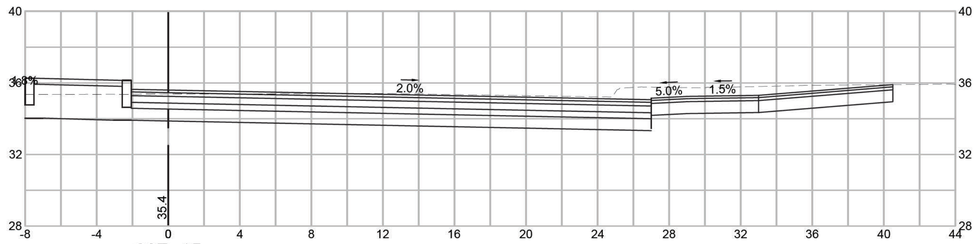

207+15

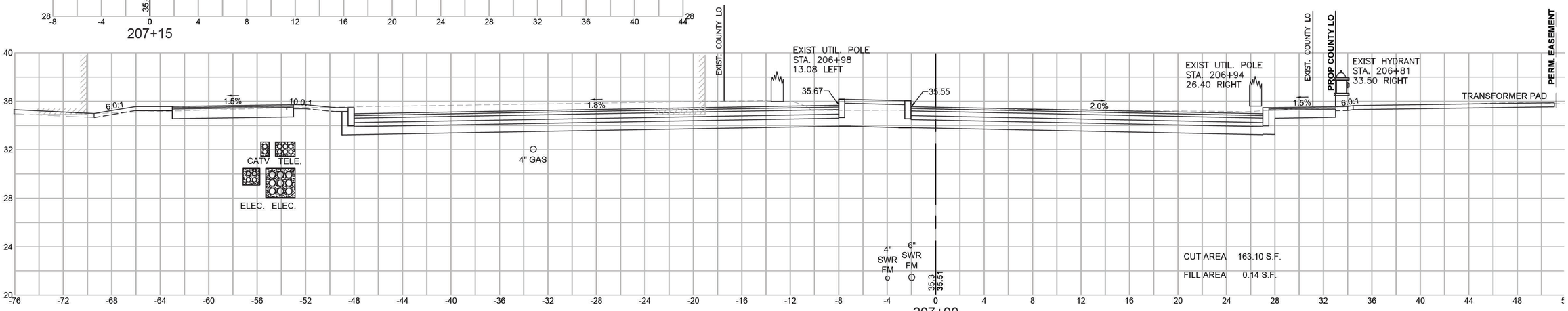

207+00

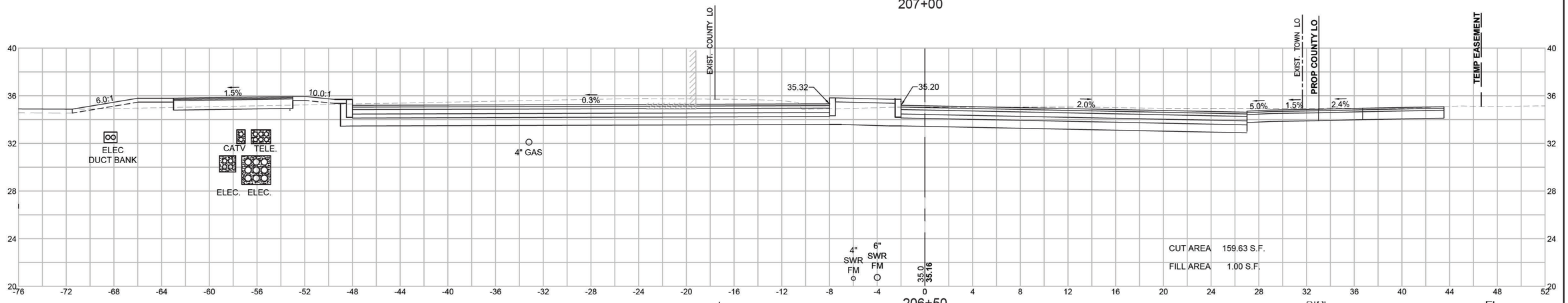

206+50

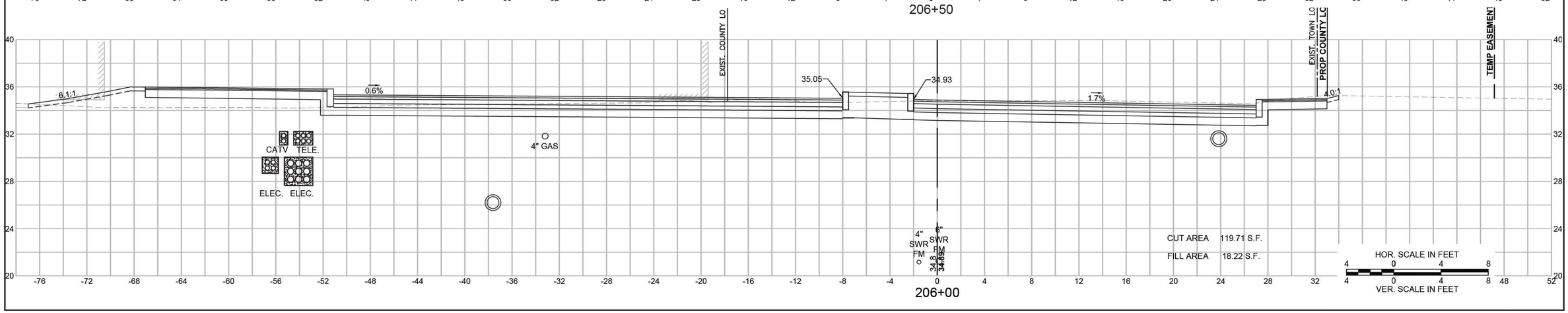

206+00

BARNSTABLE
IYANNOUGH RD (RTE 28) AND YARMOUTH RD

STATE	FED. AID PROJ. NO.	SHEET NO.	TOTAL SHEETS
MA	TAP/HSI/CMQ/STP/NFP(NI)-0035(043)	225	231
PROJECT FILE NO.	606272		

CROSS SECTIONS - SIDE STREETS
YARMOUTH ROAD

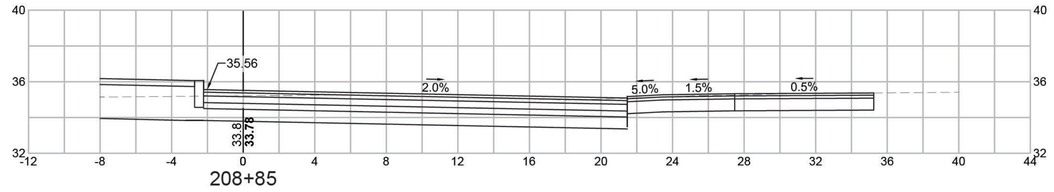

208+85

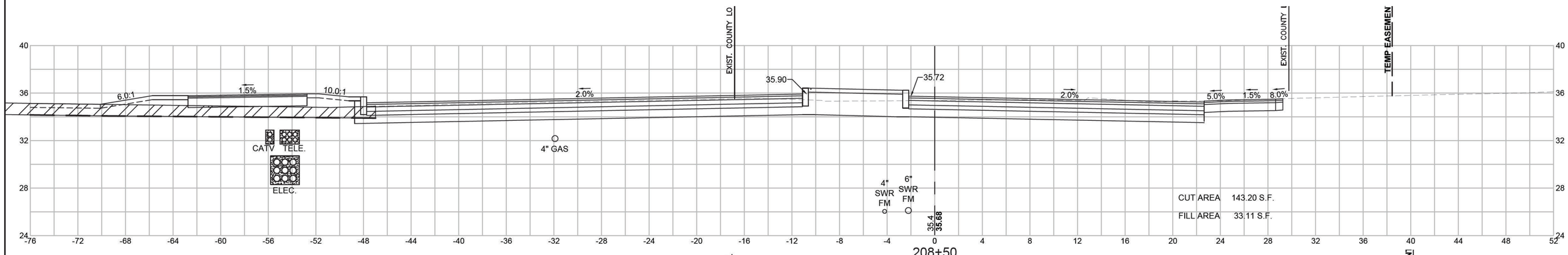

208+50

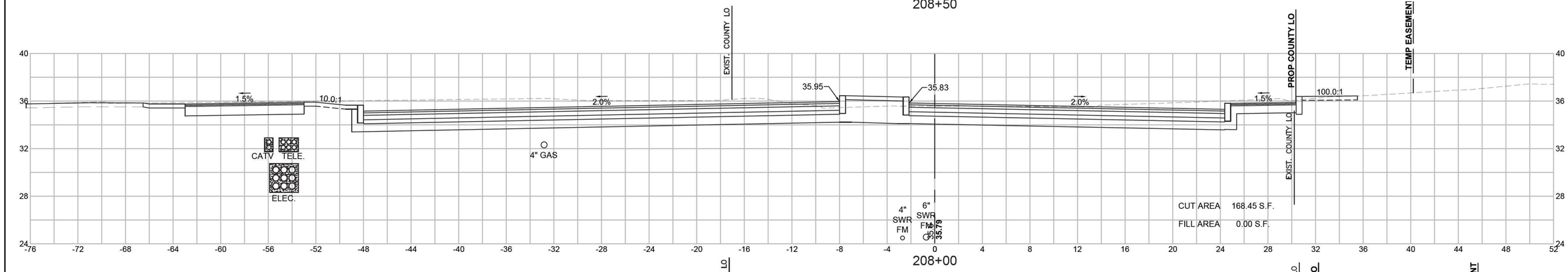

208+00

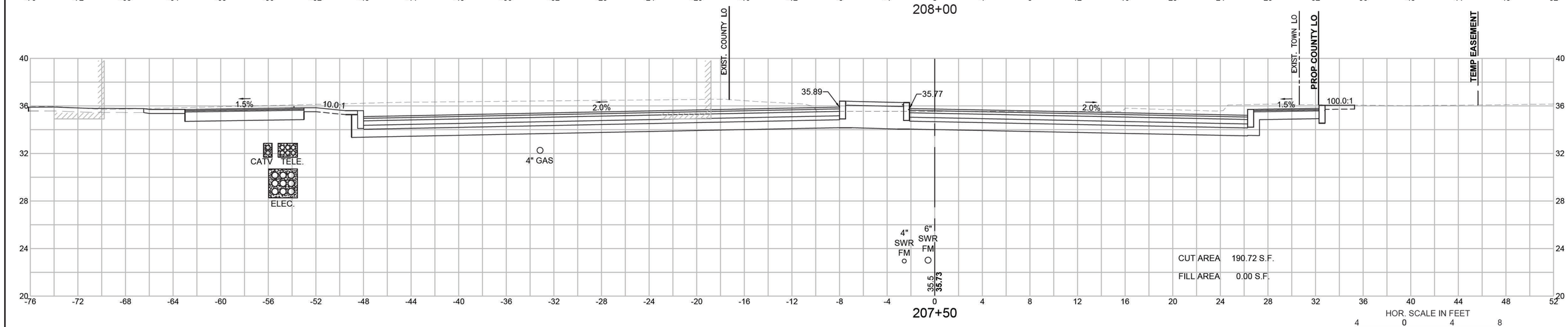

207+50

606272_HD13(XSEC YARMOUTH).DWG Plotted on 30-Nov-2020 12:26 PM

BARNSTABLE
IYANNOUGH RD (RTE 28) AND YARMOUTH RD

STATE	FED. AID PROJ. NO.	SHEET NO.	TOTAL SHEETS
MA	TAP/HSI/CMQ/STP/NFP(NI)-0035(043)	226	231
PROJECT FILE NO.	606272		

CROSS SECTIONS - SIDE STREETS
YARMOUTH ROAD

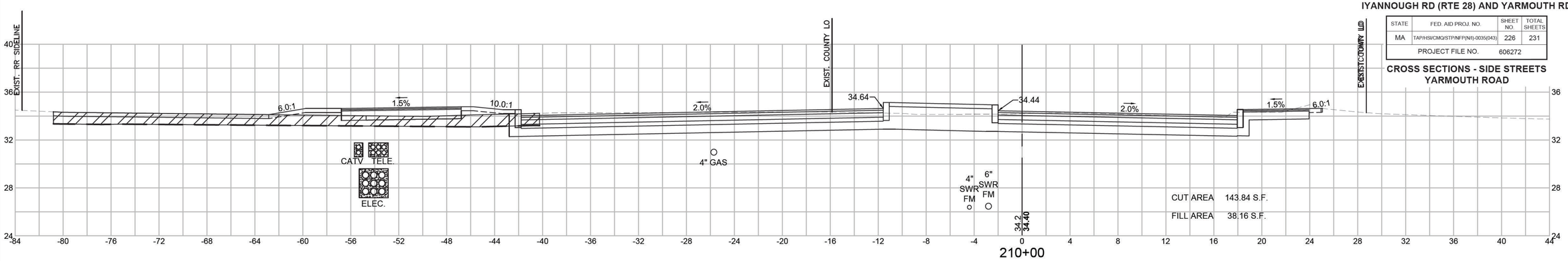

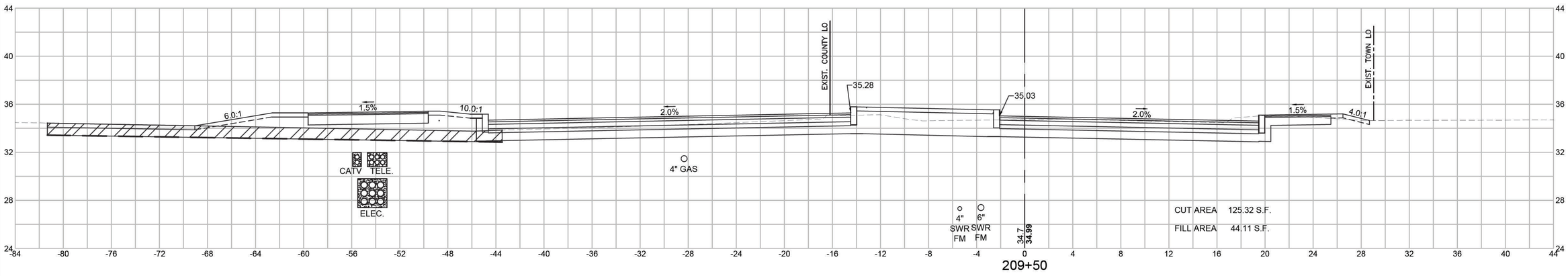

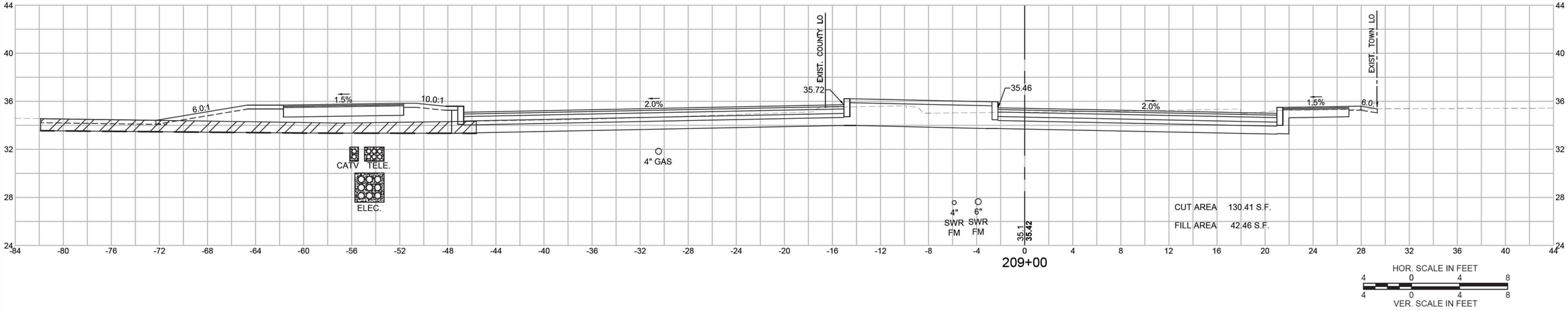

606272_HD13(XSEC YARMOUTH).DWG Plotted on 30-Nov-2020 12:27 PM

BARNSTABLE
IYANNOUGH RD (RTE 28) AND YARMOUTH RD

STATE	FED. AID PROJ. NO.	SHEET NO.	TOTAL SHEETS
MA	TAP/HSI/CMQ/STP/NFP(NI)-0035(043)	227	231
PROJECT FILE NO.	606272		

CROSS SECTIONS - SIDE STREETS
YARMOUTH ROAD

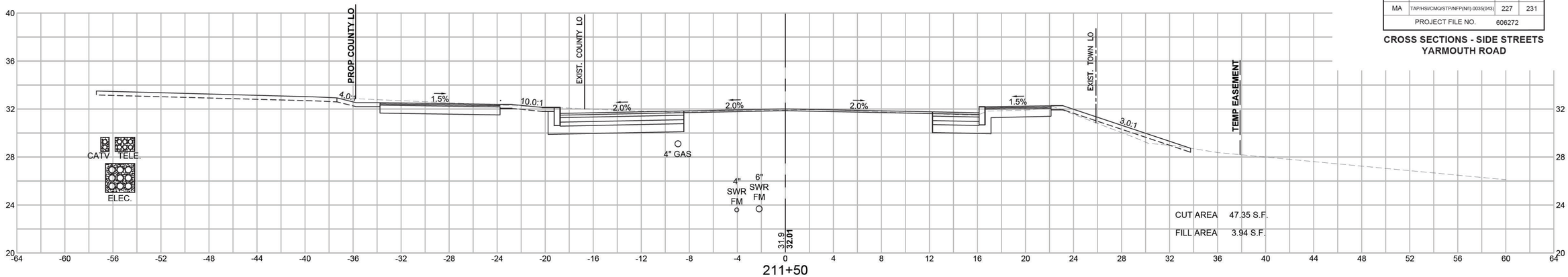

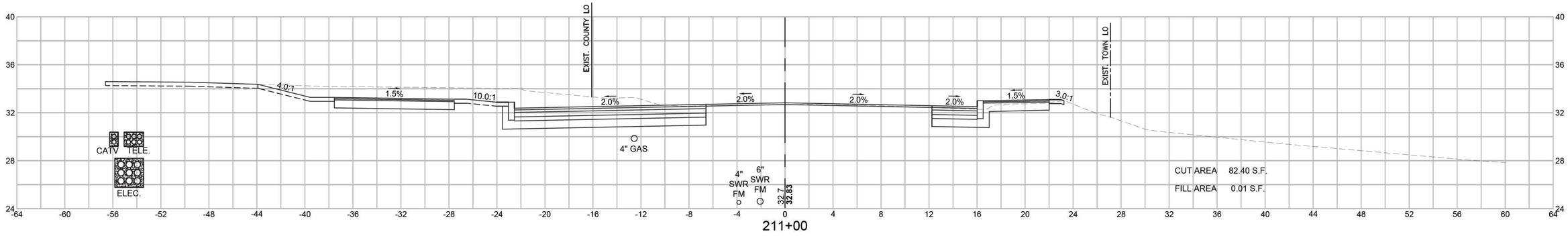

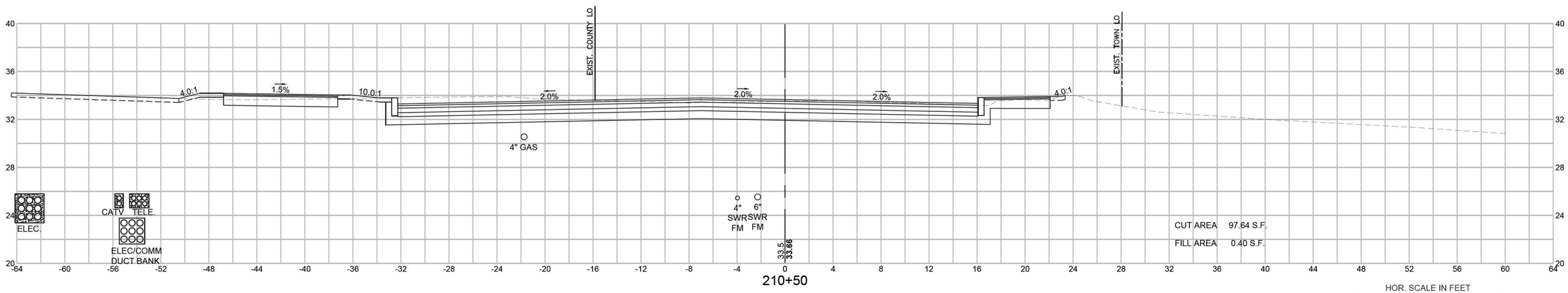

606272_HD13(XSEC YARMOUTH).DWG Plotted on 30-Nov-2020 12:28 PM

BARNSTABLE
IYANNOUGH RD (RTE 28) AND YARMOUTH RD

STATE	FED. AID PROJ. NO.	SHEET NO.	TOTAL SHEETS
MA	TAP/HSI/CMQ/STP/NFP(NI)-0035(043)	228	231
PROJECT FILE NO.	606272		

CROSS SECTIONS - SIDE STREETS
YARMOUTH ROAD

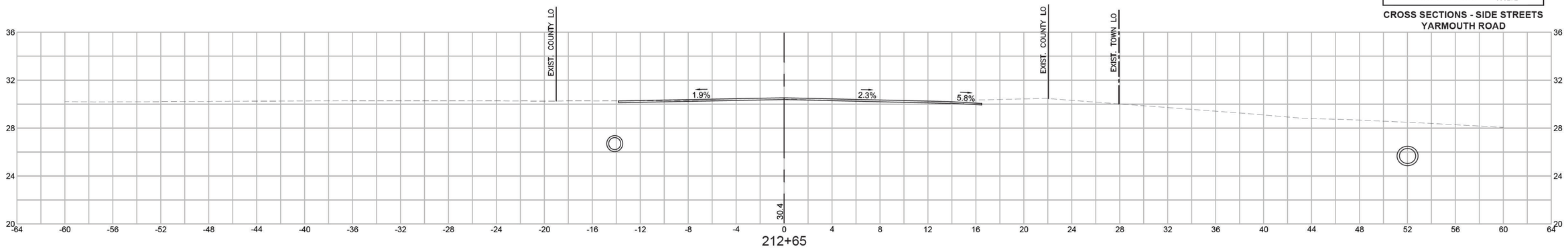

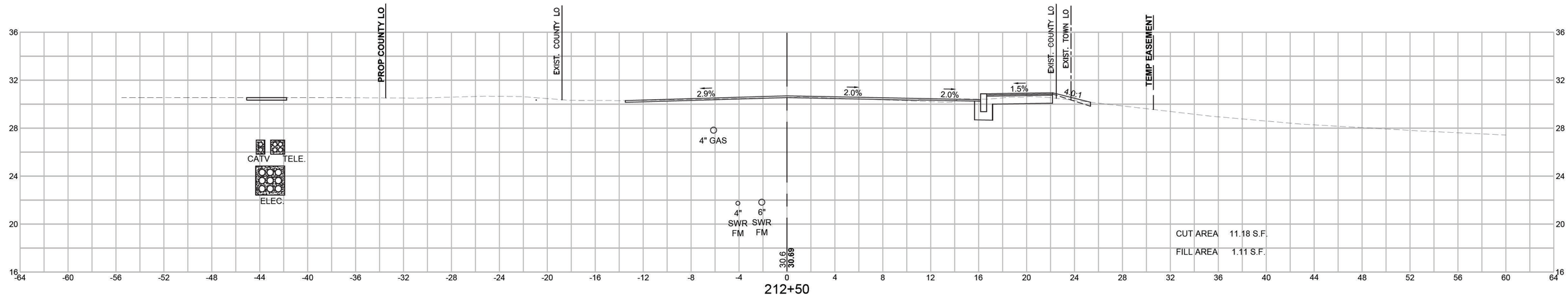

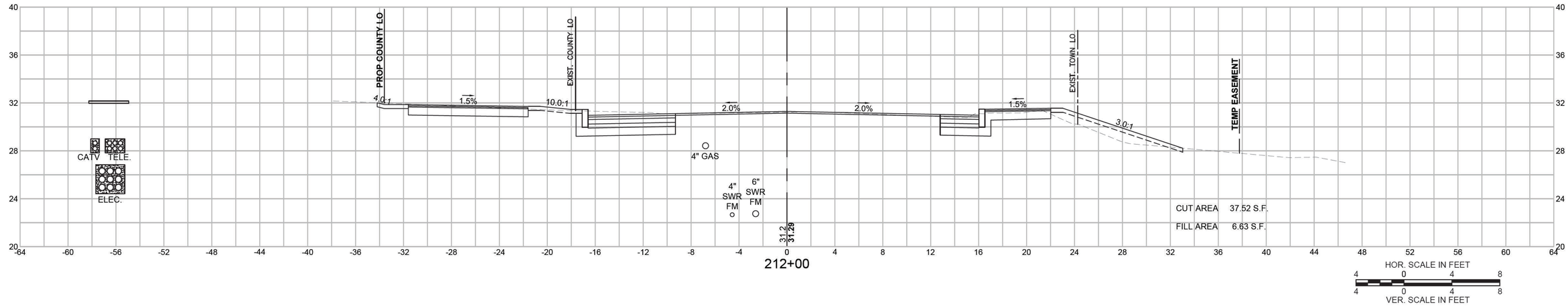

606272_HD13(XSEC YARMOUTH).DWG Plotted on 30-Nov-2020 12:29 PM

BARNSTABLE
IYANNOUGH RD (RTE 28) AND YARMOUTH RD

STATE	FED. AID PROJ. NO.	SHEET NO.	TOTAL SHEETS
MA	TAP/HSI/CMQ/STP/NFP(NI)-0035(043)	229	231
PROJECT FILE NO.	606272		

CROSS SECTIONS - SIDE STREETS
YARMOUTH ROAD

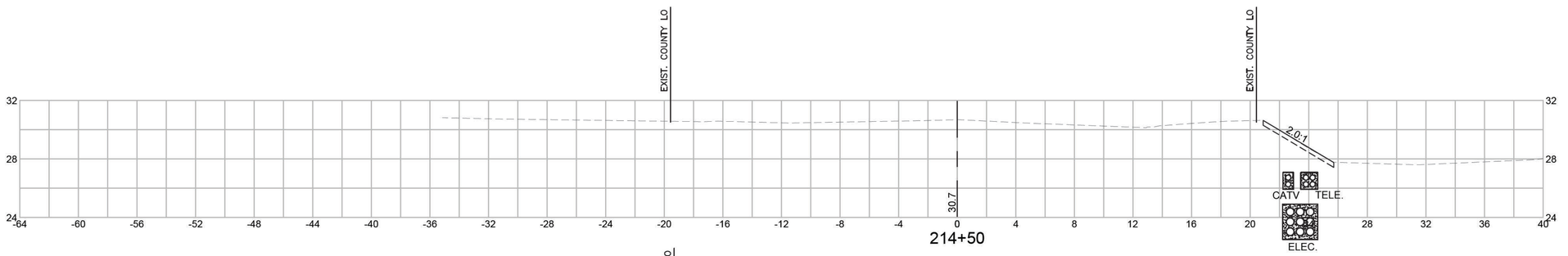

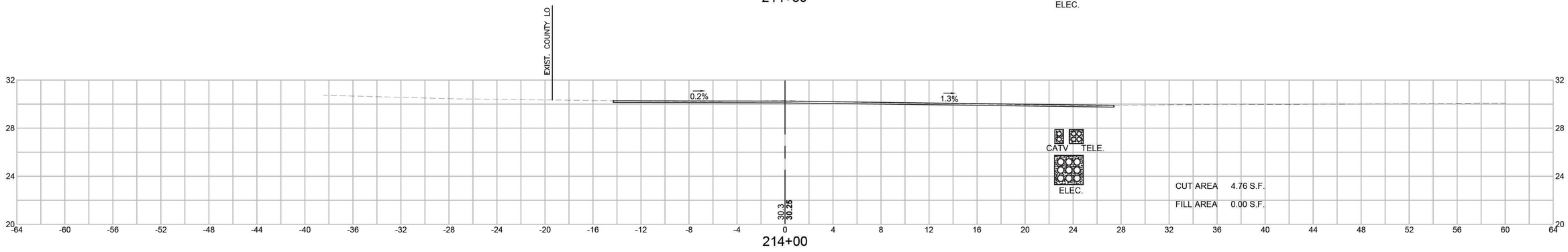

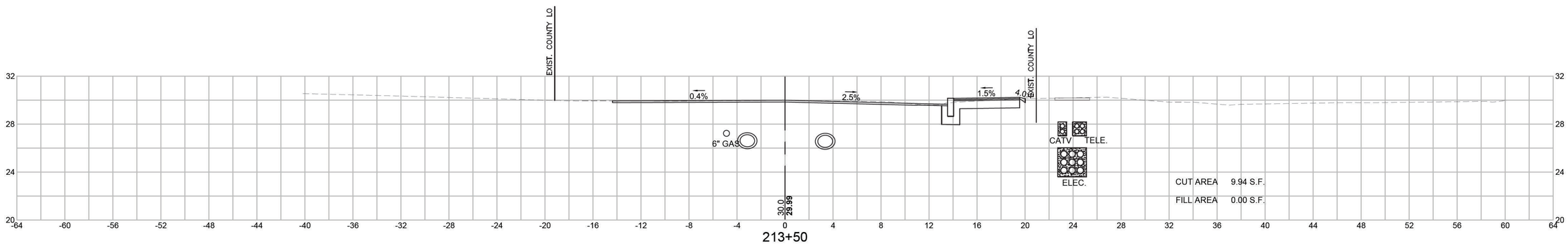

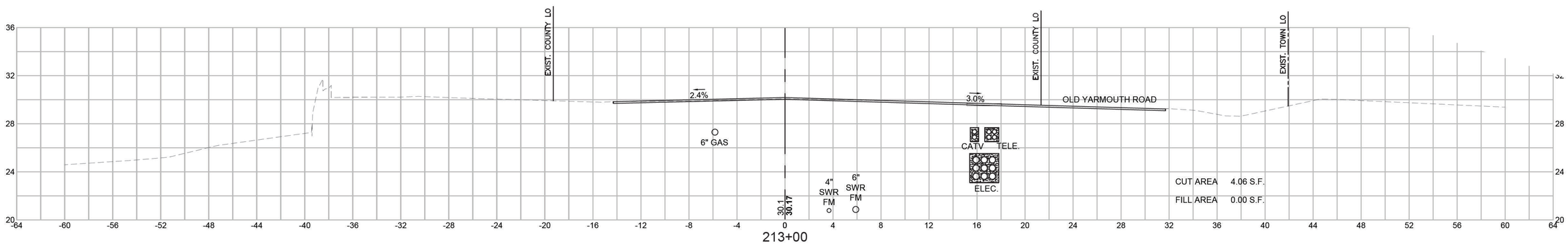

HOR. SCALE IN FEET
4 0 4 8
VER. SCALE IN FEET
4 0 4 8

606272_HD13(XSEC YARMOUTH).DWG Plotted on 30-Nov-2020 12:29 PM

BARNSTABLE
IYANNOUGH RD (RTE 28) AND YARMOUTH RD

STATE	FED. AID PROJ. NO.	SHEET NO.	TOTAL SHEETS
MA	TAP/HSI/CMQ/STP/NFP(NI)-0035(043)	230	231
PROJECT FILE NO.	606272		

CROSS SECTIONS - SIDE STREETS
ENGINE HOUSE ROAD

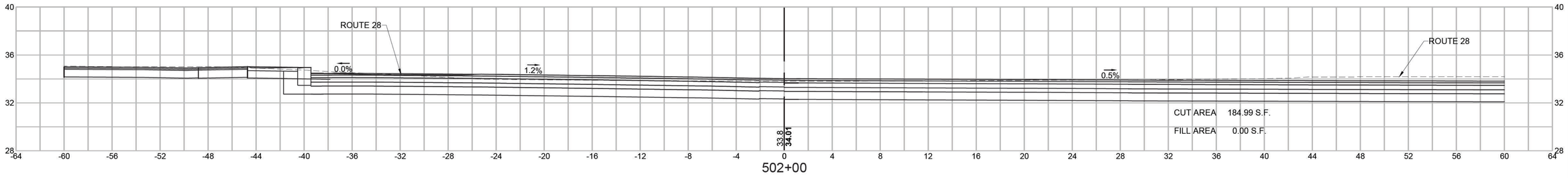

502+00

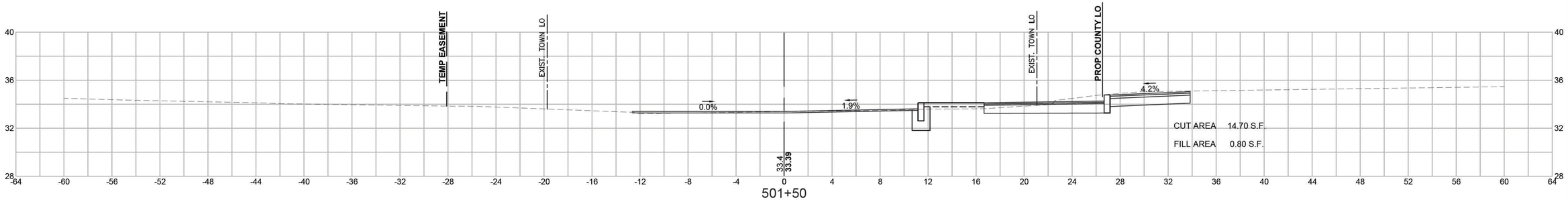

501+50

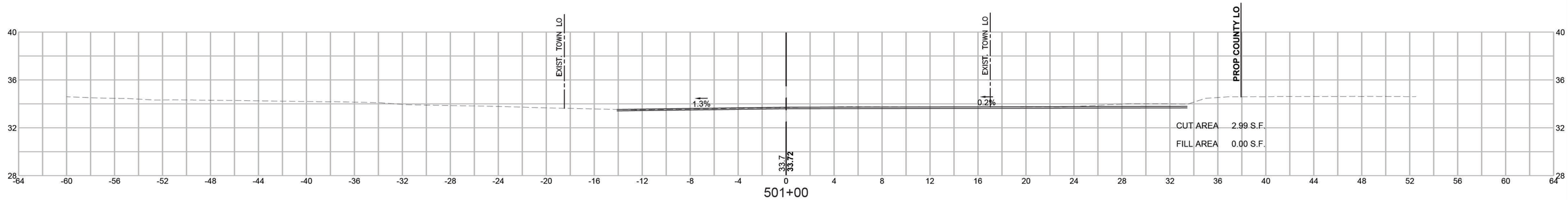

501+00

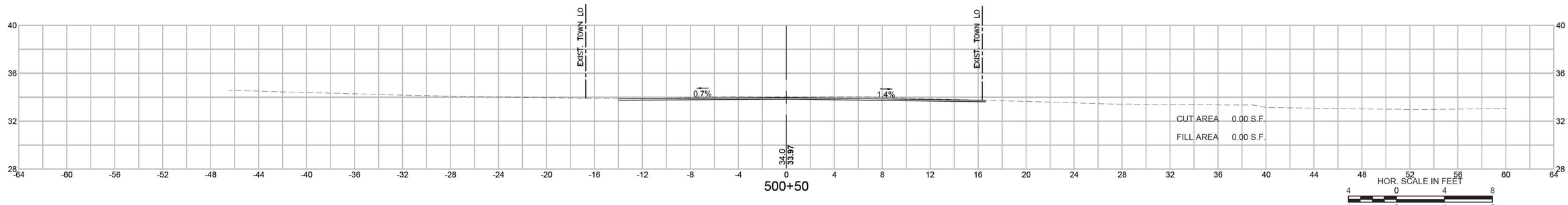

500+50

HOR. SCALE IN FEET
4 0 4 8
VER. SCALE IN FEET
4 0 4 8

Plotted on 2-Nov-2020 9:06 AM
606272_HD13(XSEC YARMOUTH).DWG

BARNSTABLE
IYANNOUGH RD (RTE 28) AND YARMOUTH RD

STATE	FED. AID PROJ. NO.	SHEET NO.	TOTAL SHEETS
MA	TAP/HSI/CMQ/STP/NFP(NI)-0035(043)	231	231
PROJECT FILE NO.	606272		

CROSS SECTIONS - SIDE STREETS
MARY DUNN WAY

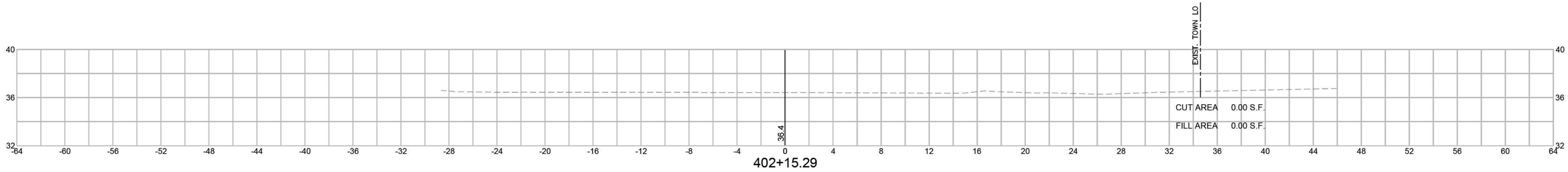

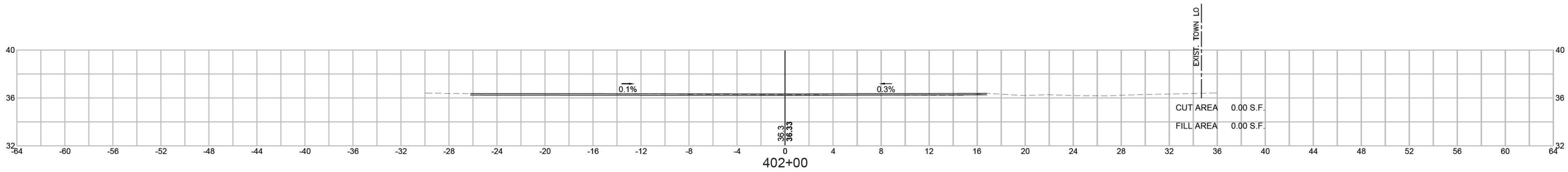

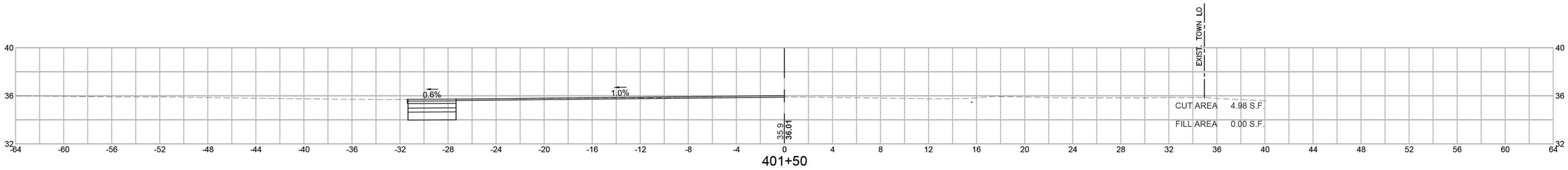

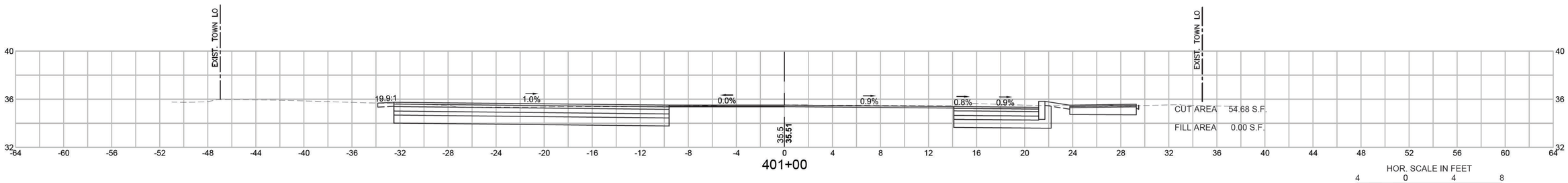

HOR. SCALE IN FEET
4 0 4 8
VER. SCALE IN FEET
4 0 4 8

606272_HD13(XSEC YARMOUTH).DWG Plotted on 2-Nov-2020 8:55 AM