WARE					
GIBBS CROSSING					
FED. ROAD DIST. No	STATE	FED. AID PROJ. Nº	FISCAL YEAR	SHEET Nº	TOTAL SHEETS
9	MASS	W.P.F.R.31	1936	2	10

STATE SERIAL Nº 10557

DRAINAGE DETAILS

TYPICAL SECTION

SCALE:- 1/4 IN = 1 FT.

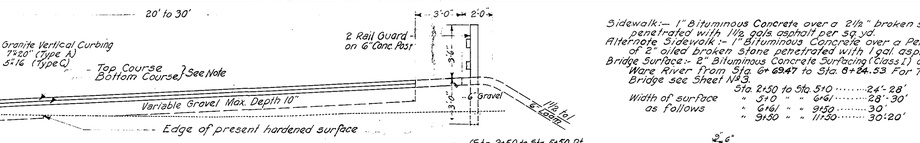

Gravel Shoulder
Sta. 2+50 to Sta. 5+75
Sta. 10+08 to Sta. 11+50

Surface:- 3" Top Course broken stone penetrated with 2½ gals. asphalt per sq. yd. and 3/4 gal. asphalt per sq. yd. for seal coat over a Bottom Course of 3" Broken stone bound with sand, except from Sta. 2+50 to Sta. 5+50 which has a Bottom Course of variable broken stone bound with sand-Maximum depth 3".

Alternate Surface: 2½" Top Course broken stone by Penolithic Method (See Specifications for treatment) over a Bottom Course of 3" broken stone bound with sand except from Sta. 2+50 to Sta. 5+50 which has a Bottom Course of variable broken stone bound with sand-Maximum depth 3"

Gravel Shoulders (Sta. 2+50 to Sta. 5+50 Rt. (Sta. 9+50 to Sta. 11+50 Rt.
Granite Vert. Curbing (Sta. 6+42 to Sta. 6+70 Lt. Sta. 8+33 to Sta. 9+50 Rt.

Sidewalk:- 1" Bituminous Concrete over a 2½" broken stone base course penetrated with 1½ gals. asphalt per sq. yd.
Alternate Sidewalk:- 1" Bituminous Concrete over a Penolithic Base Course of 2" oiled broken stone penetrated with 1 gal. asphalt per sq. yd.
Bridge Surface:- 2" Bituminous Concrete Surfacing (Class I) on Bridge over the Ware River from Sta. 6+69.47 to Sta. 8+24.53 For Typical Section on Bridge see Sheet Nº 3.

Width of surface as follows
Sta. 2+50 to Sta. 5+10 ..... 24'-28'
" 5+10 " " 6+61 ..... 28'-30'
" 6+61 " " 9+50 ..... 30'
" 9+50 " " 11+50 ..... 30'-20'

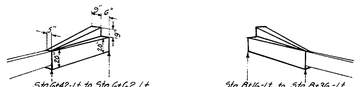

Special Concrete Curb

APPROACH TO OLD RD-RT.
STA. 5+50 TO STA. 6+58

ESTIMATED QUANTITIES
(NOT GUARANTEED)

EXCAVATION, BRIDGE	112.0	CU. YDS.
EXCAVATION, TRENCH LEDGE	25	CU. YDS.
EXCAVATION, CHANNEL	1100	CU. YDS.
BORROW, GRAVEL	400	CU. YDS.
CONCRETE, CLASS "A"	180	CU. YDS.
CONCRETE, CLASS "B" (POSTS)	4	CU. YDS.
CONCRETE, CLASS "C"	680	CU. YDS.
TESTING PILES	2	EACH
TIMBER PILES	2380	LIN. FT.
LUMBER SHEETING	1	M. F. B. M.
REINFORCING STEEL	52400	POUNDS
STRUCTURAL STEEL	268000	POUNDS
WELDED IRON FENCE	276	LIN. FT.
RIPRAP	500	CU. YDS.
BITUMINOUS WATERPROOFING	760	SQ. YDS.
BITUMINOUS CONCRETE SURFACING, CLASS "I"	65	TONS
GRANOLITHIC WALKS	90	SQ. YDS.
SCUPPERS	5	EACH
2" METAL CONDUITS	370	LIN. FT.
REMOVAL OF TEMPORARY BRIDGE	1	LUMP SUM
REMOVAL OF FORMER BRIDGE	1	LUMP SUM.

GENERAL NOTES

FINISH: ALL EXPOSED CONCRETE SURFACES TO BE RUBBED WITH CORUNDUM BLOCK AND LEFT SMOOTH AND FREE OF ALL FORM MARKS AND IMPERFECTIONS.

DATE: TO BE LOCATED ON ROADWAY FACE OF NORTHEASTERLY AND SOUTHWESTERLY END POSTS. FOR SIZE AND CHARACTER OF NUMERALS SEE SPECIAL DETAIL

FOUNDATIONS: MAY BE ALTERED, IF NECESSARY, TO SUIT CONDITIONS OF CONSTRUCTION.

BENCH MARK: STATE HIGHWAY BOUND NORTH OF STA. 5+00 ~ ASSUMED EL. 100.00.

DESIGN: IN ACCORDANCE WITH THE STANDARD SPECIFICATIONS OF THE AMERICAN ASSOCIATION OF STATE HIGHWAY OFFICIALS (1935) FOR H-20 LOADING

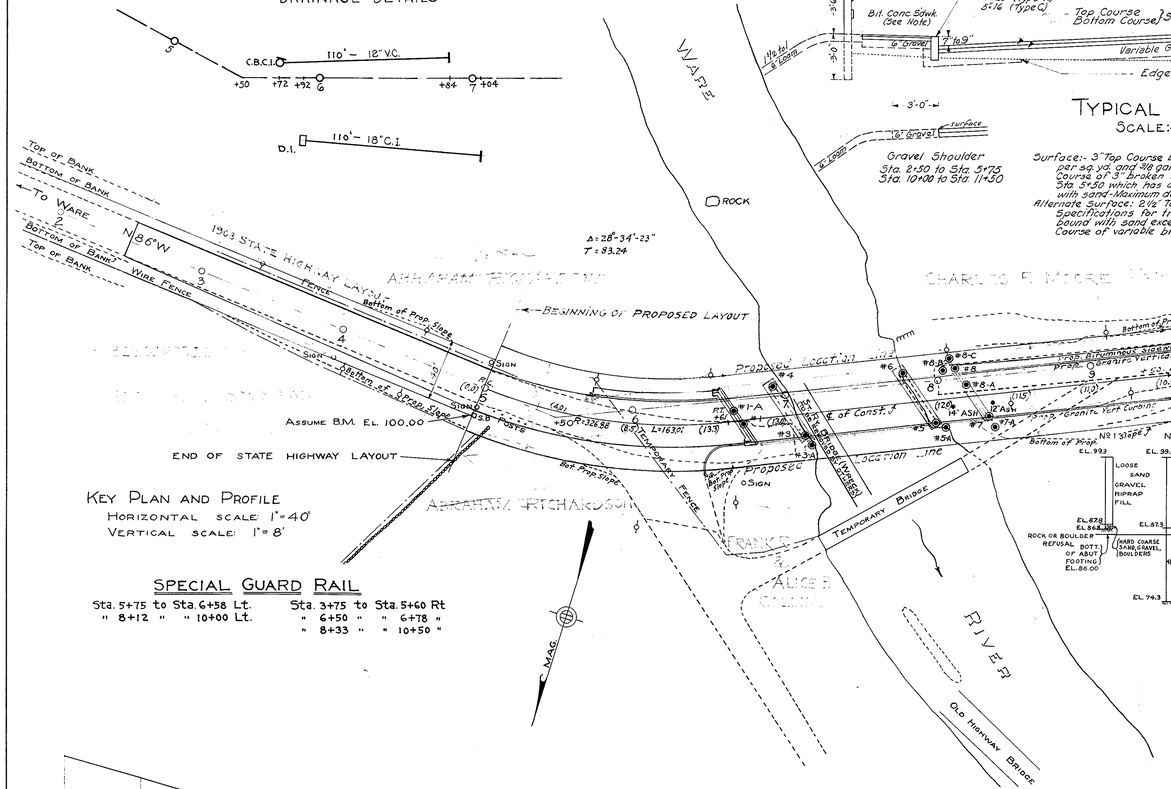

KEY PLAN AND PROFILE

HORIZONTAL SCALE: 1" = 40'
VERTICAL SCALE: 1" = 8'

SPECIAL GUARD RAIL

Sta. 5+75 to Sta. 6+58 Lt.
" 8+12 " " 10+00 Lt.

Sta. 3+75 to Sta. 5+60 Rt
" 6+50 " " 6+78 "
" 8+33 " " 10+50 "

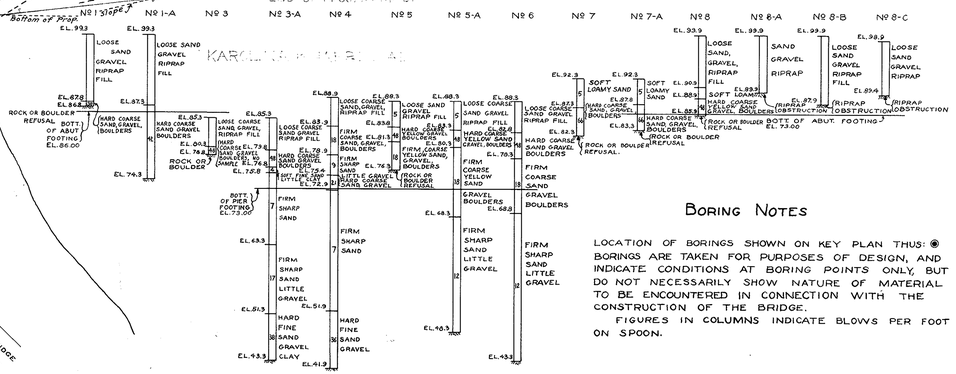

BORING NOTES

LOCATION OF BORINGS SHOWN ON KEY PLAN THUS: ◉ BORINGS ARE TAKEN FOR PURPOSES OF DESIGN, AND INDICATE CONDITIONS AT BORING POINTS ONLY, BUT DO NOT NECESSARILY SHOW NATURE OF MATERIAL TO BE ENCOUNTERED IN CONNECTION WITH THE CONSTRUCTION OF THE BRIDGE.

FIGURES IN COLUMNS INDICATE BLOWS PER FOOT ON SPOON.

BORING DATA

NOTE: BORING Nº 2 WAS NOT MADE IN FIELD BY INSTRUCTION.

BORINGS TAKEN SEPTEMBER 1936

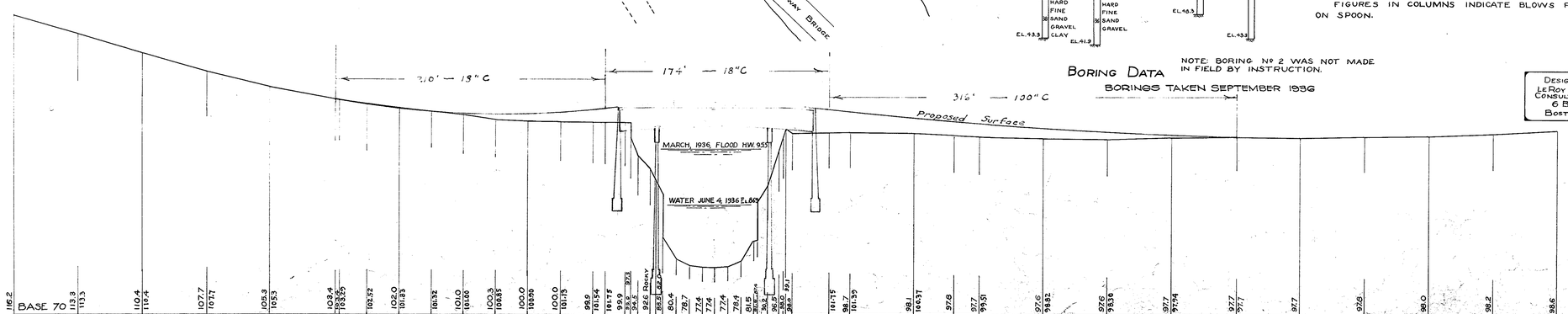

NEW ELEVATIONS ARE FOR PROFILE AT ℄ NEW ROADWAY BEFORE CORRECTIONS FOR SUPERELEVATION ARE MADE

DESIGNED BY
LEROY M. HERSUM
CONSULTING ENGINEER
6 BEACON ST.
BOSTON, MASS.

THE COMMONWEALTH OF MASSACHUSETTS
PROPOSED BRIDGE
WARE
GIBBS CROSSING (WARE & BELCHERTOWN) STATION 7+47.00
OVER WARE RIVER
SCALES AS NOTED
OFFICE OF
DEPARTMENT OF PUBLIC WORKS
100 NASHUA ST. – BOSTON, MASS.
DECEMBER 1936

P. C. Hartness — BRIDGE ENGINEER
M. H. Lelaro — CHIEF ENGINEER

DESIGNED BY S.K.C. TRACED BY H.C.M. CHECKED BY L.M.H.

DATE OF ISSUE					
ADVERTISING	CONSTRUCTION				
6-24-37	5-24-37				

SHEET 1 OF 5 SHEETS BRIDGE Nº W-5-5

FED. ROAD DIST. Nº	STATE	FED. AID PROJ. Nº	FISCAL YEAR	SHEET Nº	TOTAL SHEETS
9	MASS.	W.P.E.R. 31	1936	3	10

STATE SERIAL No. 10657

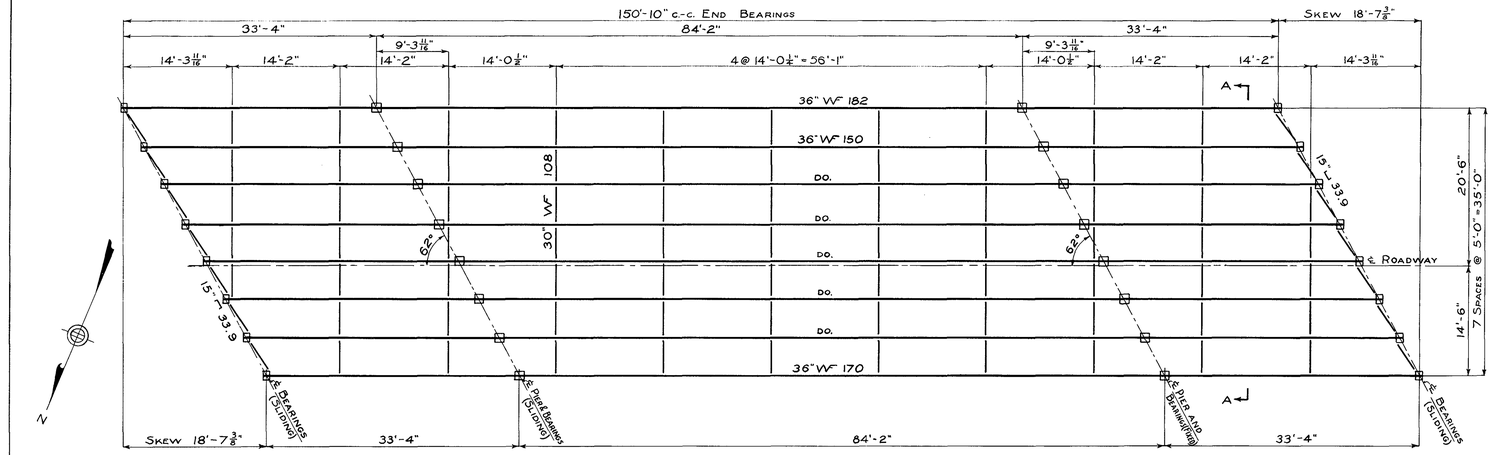

Plan of Steel Superstructure

Scale 1/8" = 1'-0"

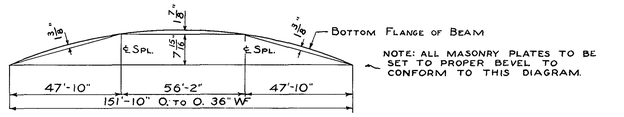

NOTE: ALL MASONRY PLATES TO BE SET TO PROPER BEVEL TO CONFORM TO THIS DIAGRAM.

Camber Diagram

No Scale

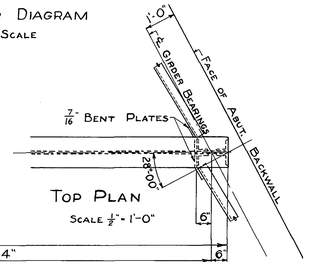

Top Plan

Scale 1/2" = 1'-0"

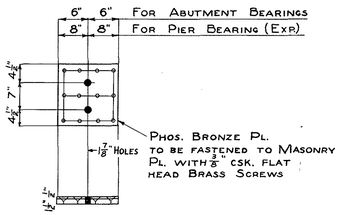

Masonry Pl. (Exp. Bear.)

Scale 3/4" = 1'-0"

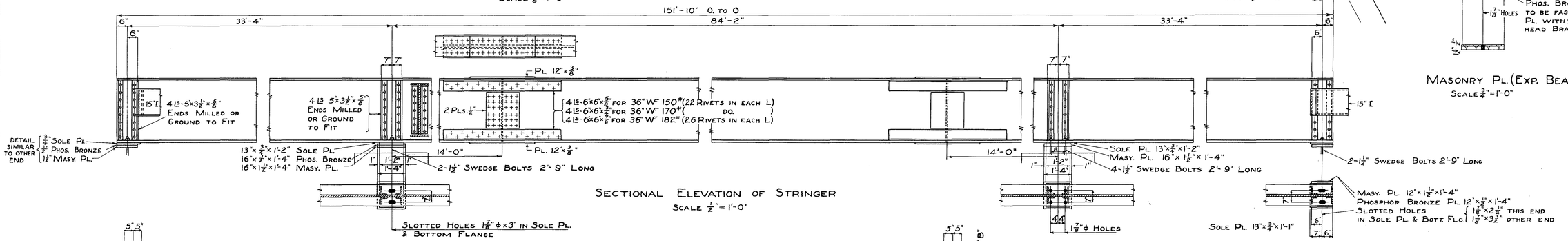

Sectional Elevation of Stringer

Scale 1/2" = 1'-0"

Bottom Flange

Note: All Rivets 7/8" ϕ
Open Holes 15/16" unless Noted

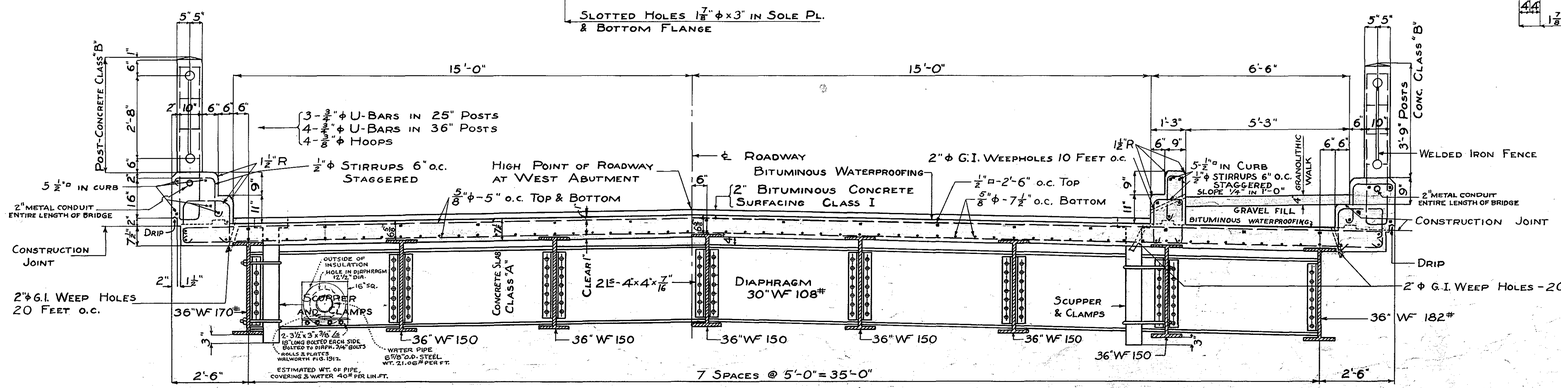

Cross Section "A-A"

Scale 1/2" = 1'-0"

NOTE: DECK ON BRIDGE VARIES IN SHAPE DUE TO SUPERELEVATION AT EAST ABUTMENT WHICH TAPERS OFF TO ZERO AT WEST ABUTMENT

CONSTRUCTION 5-24-37
ADVERTISING 4-24-37

Sheet 2 of 5 Sheets Bridge Nº W-5

Gibbs Crossing over Ware River W.

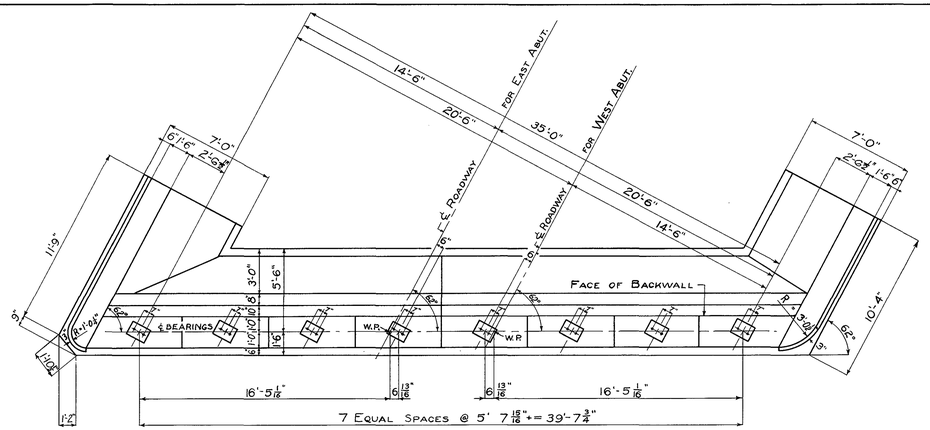

PLAN OF ABUTMENT

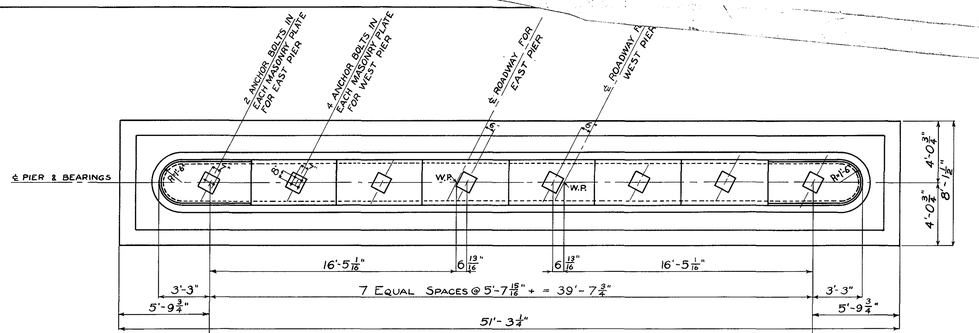

PLAN OF PIER

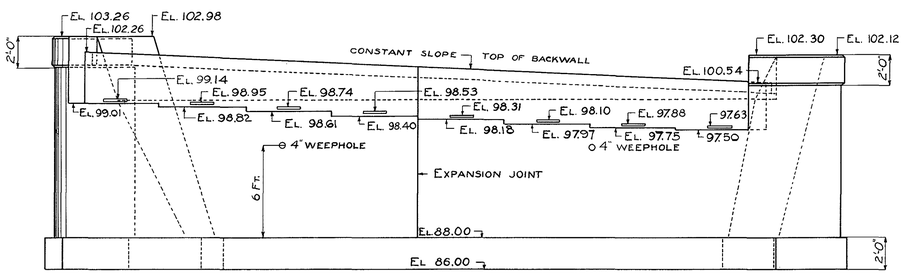

ELEVATION OF EAST ABUTMENT (LOOKING EAST)

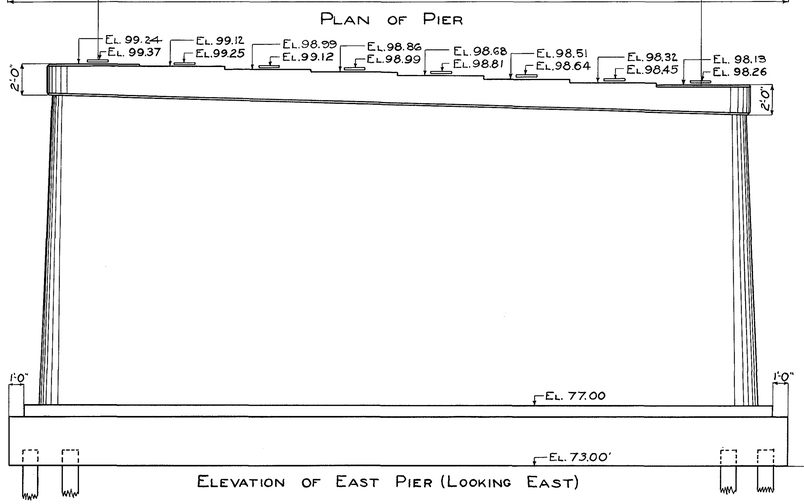

ELEVATION OF EAST PIER (LOOKING EAST)

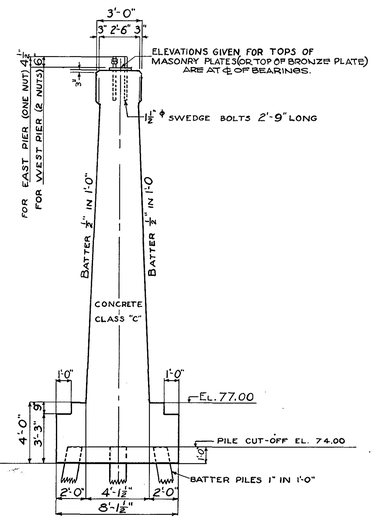

CROSS SECTION OF PIER

MAX. BEARING 12 TONS PER PILE

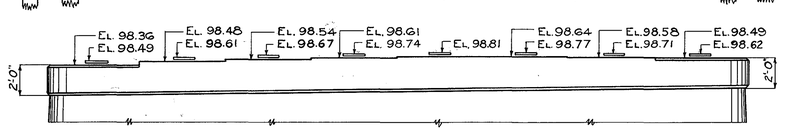

ELEVATION OF TOP OF WEST PIER (LOOKING WEST)

(PARTS NOT SHOWN SAME AS FOR EAST PIER)

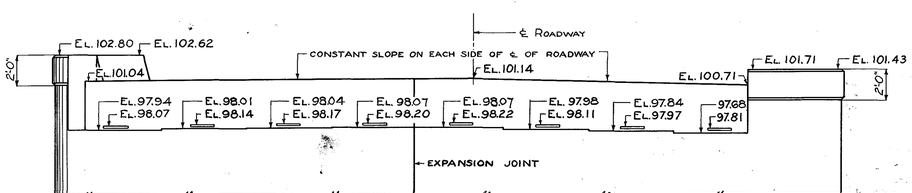

ELEVATION OF TOP OF WEST ABUTMENT (LOOKING WEST)

(PARTS NOT SHOWN SAME AS FOR EAST ABUTMENT)

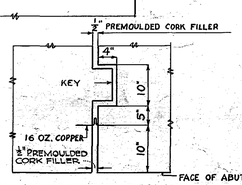

DETAIL OF ABUTMENT EXPANSION JOINT

SCALE 3/4" = 1'-0"

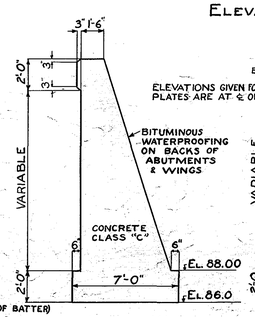

SECTION THRU WINGS

MAX. BEARING 2200 LBS. PER SQ. FT.

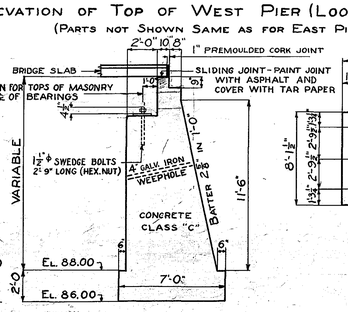

SECTION THRU ABUTMENT

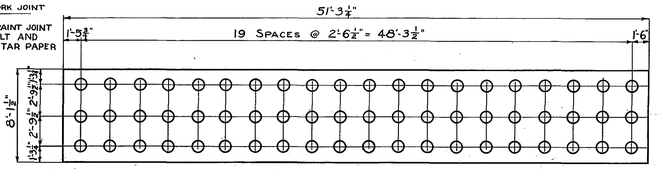

PILE PLAN FOR PIERS

SCALE 3/16" = 1'-0"

NOTE: ALL SCALES 1/4" = 1'-0" UNLESS NOTED
PIERS & ABUTMENTS ARE VIEWED FROM CENTER OF RIVER

CONSTRUCTION 5-24-37
LOVERTISING 4-24-37

SHEET 3 OF 5 SHEETS BRIDGE No. W-5-15

GIBBS CROSSING OVER WARE RIVER-WAR

FED. ROAD DIST. Nº	STATE	FED. AID PROJ. Nº	FISCAL YEAR	SHEET Nº	TOTAL SHEETS
9	MASS.	W.P.F.R.31	1936	5	10

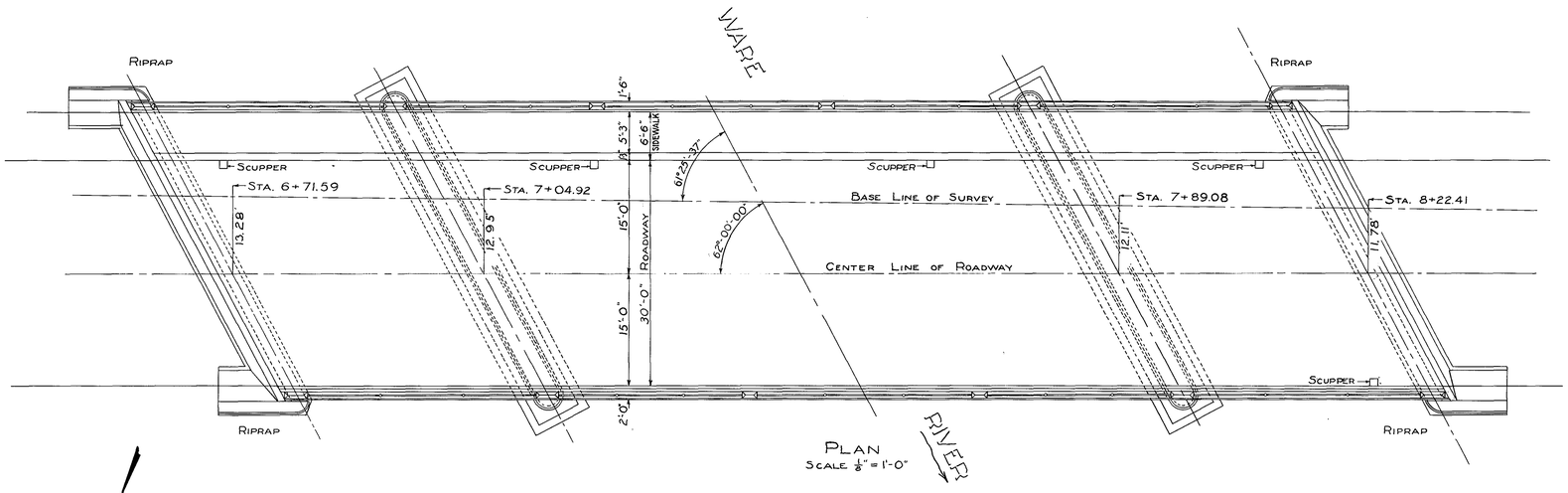

PLAN
SCALE $\frac{1}{8}$" = 1'-0"

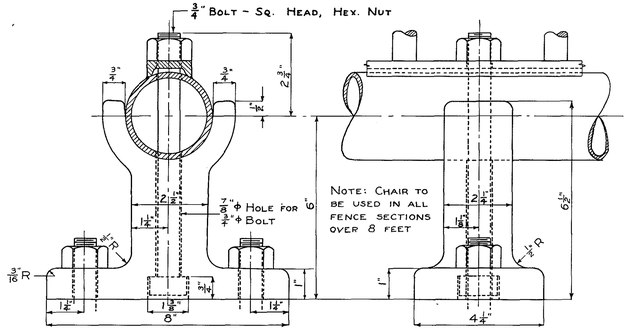

DETAIL OF CHAIR
SCALE: HALF SIZE

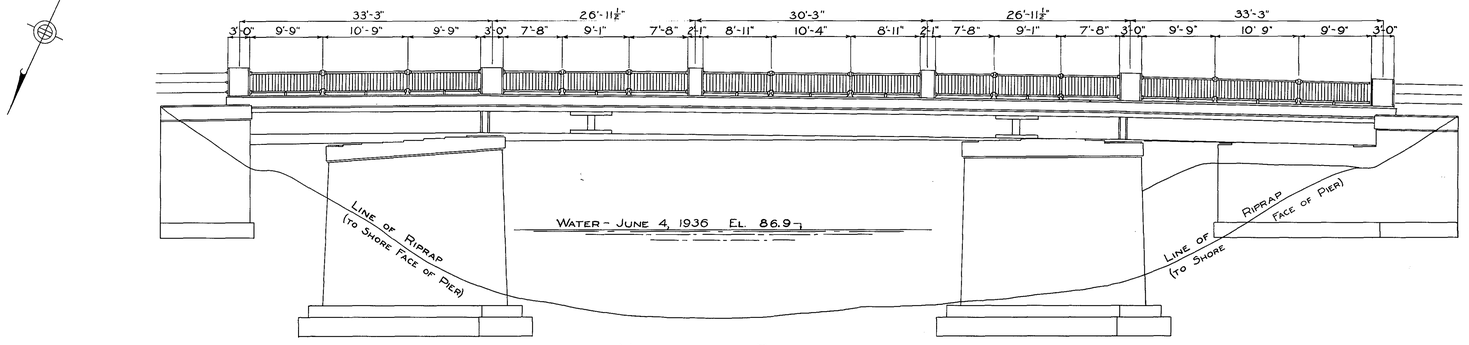

NORTHERLY ELEVATION
SCALE $\frac{1}{8}$" = 1'-0"

NOTES: SOUTHERLY ELEVATION SIMILAR TO NORTHERLY ELEVATION. RIPRAP EAST AND WEST SHORES FOR A DISTANCE OF 50 FEET NORTH AND 50 FEET SOUTH OF ABUTMENTS.

NOTE: ALL POSTS AND PALES TO BE VERTICAL. PIPE RAILS, POST OUTLETS, AND BASES OF POSTS TO BE PARALLEL TO GRADE.

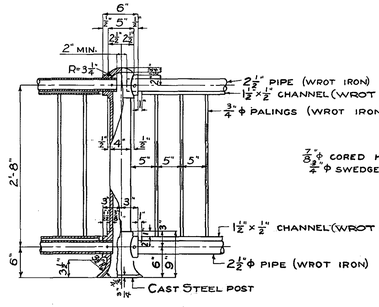

DETAIL AT POST
SCALE 1" = 1'-0"

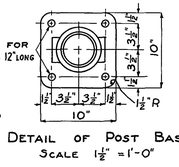

DETAIL OF POST BASE
SCALE 1½" = 1'-0"

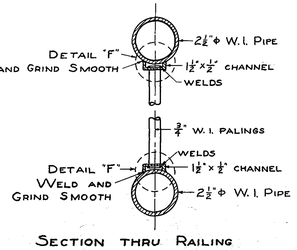

SECTION THRU RAILING
SCALE 3" = 1'-0"

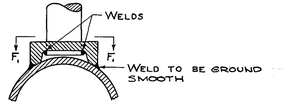

DETAIL "F"

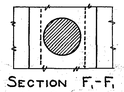

SECTION F_1-F_1
NO SCALE

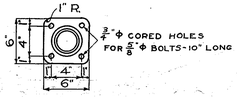

DETAIL OF FLANGE ON CONCRETE POST
SCALE 1½" = 1'-0"

FENCE DETAILS

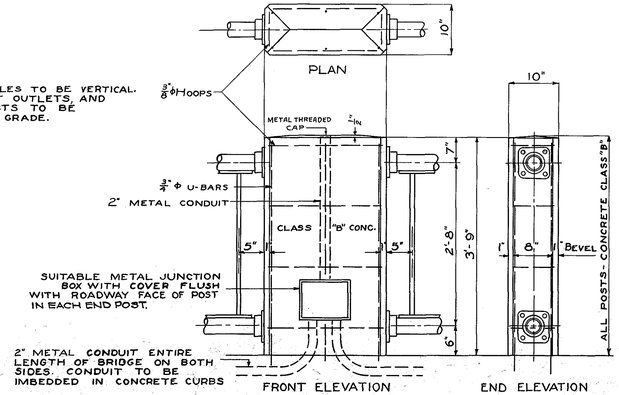

DETAIL AT CONCRETE POST
SCALE 1" = 1'-0

CONSTRUCTION 5-24-37
ADVERTISING 4-24-37

SHEET 4 OF 5 SHEETS BRIDGE Nº W
GIBBS CROSSING OVER WARE RIV

FED. ROAD DIST. Nº	STATE	FED. AID PROJ. Nº	FISCAL YEAR	SHEET Nº	TOTAL SHEETS
9	MASS.	W.P.F.R.31	1936	6	10

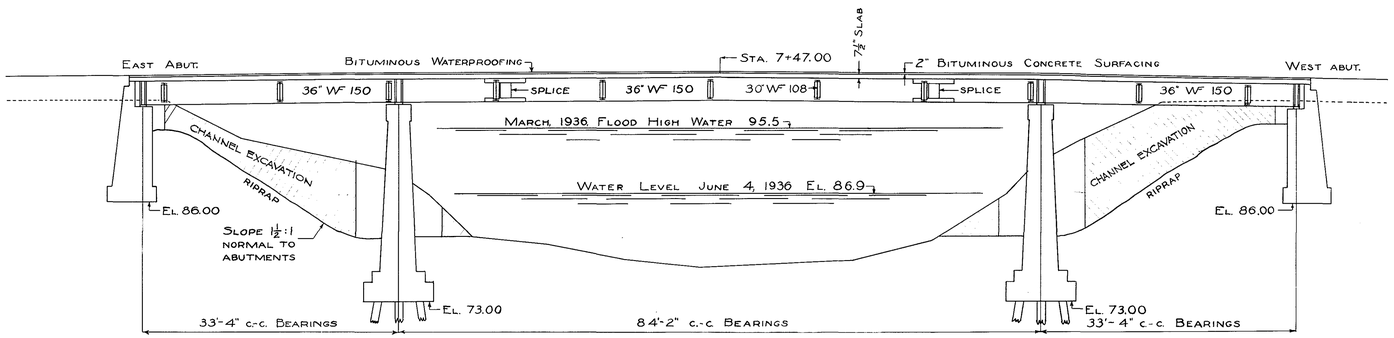

LONGITUDINAL SECTION AT ℄ ROADWAY

SCALE $\frac{1}{8}$" = 1'-0"

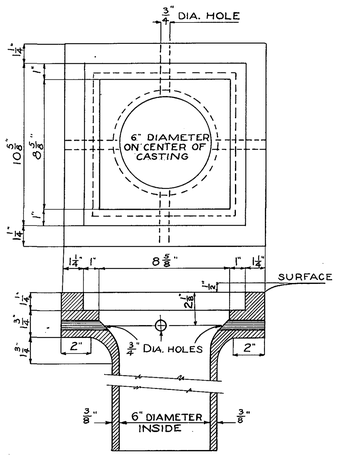

DETAILS OF SCUPPER

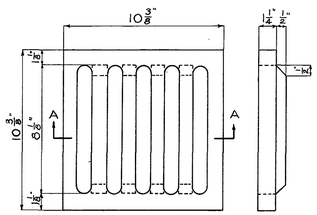

PLAN OF GRATE

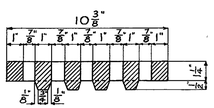

SECTION A-A

NOTE: TWO CLAMPS TO BE FURNISHED WITH EACH SCUPPER.

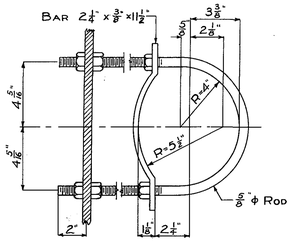

SCUPPER CLAMP

DETAILS OF CAST IRON SCUPPER, GRATE & CLAMP

SCALE 3" = 1'-0"

CONSTRUCTION 5-24-37
ADVERTISING 4-24-37

SHEET 5 OF 5 SHEETS BRIDGE Nº W-5
GIBBS CROSSING OVER WARE RIVER

MASSACHUSETTS DEPARTMENT OF TRANSPORTATION
HIGHWAY DIVISION

WARE
PALMER ROAD (ROUTE 32) OVER WARE RIVER
BRIDGE NO. W-05-015

STATE	FED. AID PROJ. NO.	SHEET NO.	TOTAL SHEETS
MA	STP(BR-OFF)-003S(606)X	1	125
PROJECT FILE NO.	605126		

TITLE SHEET

PLAN AND PROFILE OF

PALMER ROAD (ROUTE 32) OVER WARE RIVER

(BRIDGE NO. W-05-015)

IN THE TOWN OF

WARE

HAMPSHIRE COUNTY

FEDERAL AID PROJECT NO. STP(BR-OFF)-003S(606)X

THESE PLANS ARE SUPPLEMENTED BY THE 2021 MASSDOT STANDARD SPECIFICATIONS, OCTOBER 2017 CONSTRUCTION STANDARD DETAILS, THE 2015 OVERHEAD SIGNAL STRUCTURE AND FOUNDATION STANDARD DRAWINGS, MASSDOT TRAFFIC MANAGEMENT PLANS AND DETAIL DRAWINGS, THE 1990 STANDARD DRAWINGS FOR SIGNS AND SUPPORTS, THE 1968 STANDARD DRAWINGS FOR TRAFFIC SIGNALS AND HIGHWAY LIGHTING, AND THE LATEST EDITION OF THE AMERICAN STANDARD FOR NURSERY STOCK.

INDEX

SHEET NO.	DESCRIPTION
1	TITLE SHEET & INDEX
2	NOTES
3	LEGEND & ABBREVIATIONS
4	KEY PLAN & BORING LOCATIONS
5-8	TYPICAL SECTIONS
9-13	CONSTRUCTION BASELINE TIES
14-18	CONSTRUCTION PLANS
19	PROFILE - PALMER ROAD
20	PROFILE - OLD BELCHERTOWN ROAD
21-25	CURB TIE AND GRADING PLANS
26-30	TRAFFIC SIGN & PAVEMENT MARKINGS
31	TRAFFIC SIGN SUMMARY SHEET
32-36	TEMPORARY TRAFFIC CONTROL PLANS
37-43	DETOUR PLANS
44-48	DRAINAGE & UTILITY PLANS
49-52	CONSTRUCTION DETAILS
53-59	CURB RAMP AND DRIVE DETAILS
60-101	BRIDGE PLANS
102-125	CROSS SECTIONS

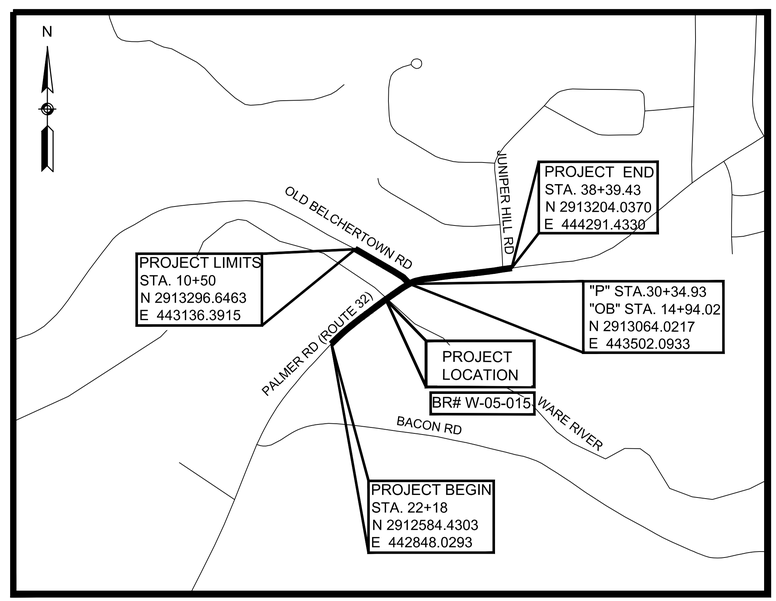

LENGTH OF PROJECT = 1,864.77 FEET = 0.353 MILES

500 1000 1500 2000

SCALE: 1" = 500'

DESIGN DESIGNATION (PALMER ROAD (ROUTE 32))

DESIGN SPEED	45 MPH
ADT (2017)	10,300
ADT (2037)	12,568
K	4.58%
D	50.19%
T (PEAK HOUR)	4.1%
T (AVERAGE DAY)	5.3%
DHV	655
DDHV	329
FUNCTIONAL CLASSIFICATION	PRINCIPAL ARTERIAL

DESIGN DESIGNATION (OLD BELCHERTOWN ROAD)

DESIGN SPEED	30 MPH
ADT (2017)	600
ADT (2037)	732
K	13.33%
D	13.33%
T (PEAK HOUR)	5.8%
T (AVERAGE DAY)	6.4%
DHV	107
DDHV	107
FUNCTIONAL CLASSIFICATION	MAJOR COLLECTOR

COMMONWEALTH OF MASSACHUSETTS
RAFIC Y. KHALIL
STRUCTURAL
No. 39125
REGISTERED PROFESSIONAL ENGINEER

Rafic Khalil

Digitally signed by Rafic Khalil
Date: 2022.09.20 11:44:02 -04'00'

KLEINFELDER
Bright People. Right Solutions.
ONE BEACON STREET, SUITE 8100
BOSTON, MA 02108
O: 617-497-7800
www.kleinfelder.com

DATE	DESCRIPTION	REV #

massDOT
Massachusetts Department of Transportation
Highway Division

APPROVED

Carrie Lavallee, P.E.

Digitally signed by Carrie Lavallee, P.E.
Date: 2022.09.21 10:20:00 -04'00'

09/21/2022

CHIEF ENGINEER **DATE**

605126_HD_TITLE, INDEX, LEGEND, AND NOTES SHEETS.DWG Plotted on 19-Aug-22 1:10 PM

GENERAL NOTES:

1. THE EXISTING CONDITIONS SHOWN ON THIS BASE MAP ARE THE RESULT OF AN ON THE GROUND INSTRUMENT SURVEY PERFORMED BETWEEN SEPTEMBER 11, 2017 AND APRIL 13, 2018 AND FEBRUARY, 2020 BY GREEN INTERNATIONAL AFFILIATES, INC. (GREEN). SEE FIELD NOTES IN MASSDOT DISTRICT 2 FIELD BOOK 40532.

2. HORIZONTAL AND VERTICAL CONTROL WAS ESTABLISHED BY MASSDOT SURVEY, IN MASSDOT DISTRICT 2 FIELD BOOK 41273, PAGE 128, ON SEPTEMBER 21, 2017. HORIZONTAL DATUM IS BASED ON THE MASSACHUSETTS STATE PLANE COORDINATE SYSTEM, NAD83 (2011) EPOCH 2010.0000, VERTICAL DATUM IS NAVD 88 (COMPUTED USING GEOID12B) USING THE FOLLOWING CONTROL POINTS:

POINT	GRID NORTHING	GRID EASTING	ELEVATION	COMBINED GROUND TO GRID SCALE FACTOR
39BB	2911786.073	483371.788	632.369	0.999938940233761
M20ELA	2876060.773	448805.323	374.059	0.999951731620977
MABT	2929110.887	417539.967	489.889	0.999946595359008
Z 39	2885665.180	427469.289	334.642	0.999953241077761

MASSDOT ESTABLISHED THE FOLLOWING POINTS FOR THIS PROJECT:

POINT	GRID NORTHING	GRID EASTING	ELEVATION	DESCRIPTION
1985 (GREEN 7)	2912680.965	442975.879	387.099	PK NAIL
1986 (GREEN 2)	2912939.712	443297.536	390.550	PK NAIL

THE UNIT OF MEASUREMENTS IS US FEET. THE PROJECT COMBINED SCALE FACTOR IS 0.999950617592114.

3. THE RIGHT OF WAY LINES SHOWN ON THIS BASE MAP ARE THE DIRECT RESULT OF AN INSTRUMENT SURVEY PERFORMED ON THE GROUND BY GREEN AND FROM PLANS AND DEEDS OF RECORD. PRIVATE PROPERTY LINES HAVE NOT BEEN SURVEYED, THEY ARE COMPILED FROM GIS & RECORD PLAN INFORMATION AND SHOULD BE CONSIDERED APPROXIMATE.

4. DIVISIONS OF PRIVATE OWNERSHIPS ARE COMPILED FROM DEEDS, RECORD PLANS AND ASSESSOR'S MAPS.

5. WETLAND DELINEATION WAS CONDUCTED BY CLE ENGINEERING IN MAY OF 2017. THE DELINEATED WETLAND FLAGS WERE LOCATED BY ON-THE-GROUND INSTRUMENT SURVEY BY NITSCH ENGINEERING IN MAY OF 2017.

6. THE CONTRACTOR SHALL FIELD VERIFY CONDITIONS AND DIMENSIONS PRIOR TO CONSTRUCTION.

7. THE UTILITY INFORMATION SHOWN IS COMPILED BASED ON FIELD SURVEY AND RECORD INFORMATION. THE LOCATIONS OF UNDERGROUND PIPE AND CONDUITS HAVE BEEN DETERMINED FROM RECORD PLANS AND ARE APPROXIMATE ONLY. LOCATIONS OF UNDERGROUND STRUCTURES MAY VARY FROM LOCATIONS SHOWN HEREON. ADDITIONAL BURIED UTILITIES/STRUCTURES MAY BE ENCOUNTERED. BEFORE PLANNING FUTURE CONNECTIONS, THE PROPER UTILITY ENGINEERING DEPARTMENT/COMPANY SHOULD BE CONSULTED AND THE ACTUAL LOCATIONS OF SUBSURFACE STRUCTURES SHOULD BE DETERMINED IN THE FIELD. SEVENTY-TWO HOURS PRIOR TO EXCAVATION, BLASTING, GRADING, AND/OR PAVING, CONTACT THE DIG SAFE CALL CENTER AT 1-888-344-7233.

8. INVERTS SHOWN ON PLAN ARE NOT GUARANTEED TO BE ACCURATE. DUE TO THE LIMITATIONS OF FIELD OBSERVATION AND SURVEY TECHNIQUES THE INVERTS ARE SHOWN AS APPROXIMATE ONLY AND SHALL NOT BE WARRANTED TO BE CORRECT. ADDITIONAL FIELD INVESTIGATION IS NECESSARY WHERE ACCURATE MEASUREMENTS ARE REQUIRED FOR DESIGN OF CRITICAL AREAS.

9. WHERE AN EXISTING UTILITY IS FOUND TO CONFLICT WITH THE PROPOSED WORK, THE LOCATION, ELEVATION AND SIZE OF THE UTILITY SHALL BE ACCURATELY DETERMINED WITHOUT DELAY BY THE CONTRACTOR, AND THE INFORMATION FURNISHED TO THE ENGINEER FOR RESOLUTION OF THE CONFLICT.

10. UTILITY COORDINATION WITH THE TOWN OF WARE, AND PRIVATE UTILITY COMPANIES, WILL BE REQUIRED. THE CONTRACTOR SHALL MAKE ARRANGEMENTS FOR THE ALTERATION AND ADJUSTMENT OF GAS, ELECTRIC, TELEPHONE AND ANY OTHER PRIVATE UTILITIES BY THE UTILITY COMPANIES.

11. THE EXISTING CONDITIONS PLAN IS TO BE USED FOR THE SPECIFIED PROJECT ONLY AND IS NOT WARRANTED TO BE COMPLETE FOR ANY OTHER FUTURE PROJECTS.

12. ALL PIPES LABELED AS (REC) ARE BASED ON RECORD INFORMATION ONLY AND NOT OBSERVED IN THE FIELD.

13. NO EXISTING PUBLIC UTILITY STRUCTURES SHALL BE ABANDONED AND/OR DISMANTLED WITHOUT AUTHORIZATION FROM THE ENGINEER.

14. THE CONTRACTOR SHALL COORDINATE THE SEQUENCING OF WORK WITH THE UTILITIES AROUND SEASONAL OR PHYSICAL CONSTRAINTS AND SHALL ANTICIPATE WORKING RESTRICTIONS FOR COMMUNICATION RELOCATIONS DURING PEAK HOURS.

15. CONTRACTOR SHALL ALTER THE MASONRY OF THE TOP SECTION OF ALL EXISTING UTILITY STRUCTURES AS NECESSARY FOR CHANGES IN GRADE, AND ADJUST ALL STRUCTURES TO THE PROPOSED FINISH SURFACE GRADE. REQUIRED NEW MASONRY SHALL BE CLAY BRICK CONFORMING TO M4.05.2.

16. THE CONTRACTOR SHALL COMPLY WITH ALL REQUIREMENTS OF PERMITS, CONDITIONS AND LICENSES ISSUED BY FEDERAL, STATE AND LOCAL AGENCIES HAVING JURISDICTION.

17. AREAS OUTSIDE THE LIMITS OF PROPOSED WORK DISTURBED BY THE CONTRACTOR'S OPERATIONS SHALL BE RESTORED BY THE CONTRACTOR TO THEIR ORIGINAL CONDITION AT NO EXPENSE TO THE OWNER.

18. THE TERM "PROPOSED" (PROP.) MEANS WORK TO BE CONSTRUCTED USING NEW MATERIALS OR, WHERE APPLICABLE, RE-USING EXISTING MATERIALS IDENTIFIED AS "REMOVE AND RESET" (R&R).

19. JOINTS BETWEEN NEW HOT MIX ASPHALT ROADWAY PAVEMENT AND SAWCUT EXISTING PAVEMENT SHALL BE SEALED WITH HMA JOINT SEALER SEE SUBSECTION 450.

20. ALL EXISTING SIGNS WITHIN THE PROJECT LIMITS SHALL BE RETAINED UNLESS INDICATED OTHERWISE ON THE DRAWINGS.

21. ALL CURB TIE DIMENSIONS ARE TO THE EDGE OF PAVEMENT.

22. PROPOSED UTILITY POLE LOCATIONS ARE PROVIDED ON PLANS FOR UTILITY COORDINATION PURPOSES ONLY. FINAL LOCATION AND DESIGN OF ALL RELOCATED OR NEW UTILITY POLES SHALL BE DETERMINED BY THE UTILITY POLE OWNER.

23. EXISTING GRAVEL BORROW DETERMINED TO BE SUITABLE SHALL REMAIN, AS DIRECTED BY THE ENGINEER.

24. ALL MATERIAL SPECIFIED AS REMOVE AND STACK SHALL BE TRANSPORTED AND STACKED AT THE WARE HIGHWAY DEPARTMENT LOCATED AT 18 MECHANIC STREET, WARE, MA 01802, OR AS DIRECTED BY THE ENGINEER.

GENERAL SYMBOLS

EXISTING	PROPOSED	DESCRIPTION
JB	JB	JERSEY BARRIER
CB	CB	CATCH BASIN
		CATCH BASIN CURB INLET
FP	FP	FLAG POLE
GP	GP	GAS PUMP
MB	MB	MAIL BOX
		POST SQUARE
		POST CIRCULAR
WELL	WELL	WELL
EHH	EHH	ELECTRIC HANDHOLE
		FENCE GATE POST
GG	GG	GAS GATE
BHL #	BHL #	BORING HOLE
MW #	MW #	MONITORING WELL
TP #	TP #	TEST PIT
		HYDRANT
		LIGHT POLE
CO.BD.		COUNTY BOUND
		GPS POINT
		CABLE MANHOLE
		DRAINAGE MANHOLE
		ELECTRIC MANHOLE
		GAS MANHOLE
		MISC MANHOLE
		SEWER MANHOLE
		TELEPHONE MANHOLE
		WATER MANHOLE
MHB	MHB	MASSACHUSETTS HIGHWAY BOUND
MON		MONUMENT
SB		STONE BOUND
TB		TOWN OR CITY BOUND
		TRAVERSE OR TRIANGULATION STATION
TPL or GUY	TPL or GUY	TROLLEY POLE OR GUY POLE
HTP		TRANSMISSION POLE
UFB	UFB	UTILITY POLE W/ FIREBOX
UPDL	UPDL	UTILITY POLE WITH DOUBLE LIGHT
ULT	ULT	UTILITY POLE W / 1 LIGHT
UPL	UPL	UTILITY POLE
		BUSH
•SIZE & TYPE		TREE
		STUMP
		SWAMP / MARSH
WG	WG	WATER GATE
PM	PM	PARKING METER
		OVERHEAD CABLE/WIRE
		CURBING
100 99		CONTOURS (ON-THE-GROUND SURVEY DATA)
100 99		CONTOURS (PHOTOGRAMMETRIC DATA)
		UNDERGROUND DRAIN PIPE (DOUBLE LINE 24 INCH AND OVER)
		UNDERGROUND ELECTRIC DUCT (DOUBLE LINE 24 INCH AND OVER)
		UNDERGROUND GAS MAIN (DOUBLE LINE 24 INCH AND OVER)
		UNDERGROUND SEWER MAIN (DOUBLE LINE 24 INCH AND OVER)
		UNDERGROUND TELEPHONE DUCT (DOUBLE LINE 24 INCH AND OVER)
		UNDERGROUND WATER MAIN (DOUBLE LINE 24 INCH AND OVER)
		BALANCED STONE WALL
		GUARD RAIL - STEEL POSTS
		GUARD RAIL - WOOD POSTS
		GUARD RAIL - DOUBLE FACE - STEEL POSTS
		GUARD RAIL - DOUBLE FACE - WOOD POSTS
		CHAIN LINK OR METAL FENCE
		WOOD FENCE
		SEDIMENTATION FENCE
		TREE LINE
		SAWCUT LINE
		TOP OR BOTTOM OF SLOPE
		LIMIT OF EDGE OF PAVEMENT OR COLD PLANE AND OVERLAY
		BANK OF RIVER OR STREAM
		BORDER OF WETLAND
		100 FT WETLAND BUFFER
		200 FT RIVERFRONT BUFFER
		STATE HIGHWAY LAYOUT
		TOWN OR CITY LAYOUT
		COUNTY LAYOUT
		RAILROAD SIDELINE
		TOWN OR CITY BOUNDARY LINE
		PROPERTY LINE OR APPROXIMATE PROPERTY LINE
		EASEMENT
		FULL DEPTH CONSTRUCTION

TRAFFIC SYMBOLS

EXISTING	PROPOSED	DESCRIPTION
		SIGN AND POST
		SIGN AND POST (2 POSTS)
		CONTROL CABINET, GROUND MOUNTED
		CONTROL CABINET, POLE MOUNTED
		FLASHING BEACON CONTROL AND METER PEDESTAL
		LOAD CENTER ASSEMBLY
		PULL BOX 12"x12" (OR AS NOTED)

PAVEMENT MARKINGS SYMBOLS

EXISTING	PROPOSED	DESCRIPTION
		PAVEMENT ARROW - WHITE
ONLY	ONLY	LEGEND "ONLY" - WHITE
	SL	STOP LINE
	CW	CROSSWALK
	SWL	SOLID WHITE LINE
	SYL	SOLID YELLOW LINE
	BWL	BROKEN WHITE LINE
	BYL	BROKEN YELLOW LINE
	DWL	DOTTED WHITE LINE
	DYL	DOTTED YELLOW LINE
	DWLEx	DOTTED WHITE LINE EXTENSION
	DYLEx	DOTTED YELLOW LINE EXTENSION
	DBWL	DOUBLE WHITE LINE
	DBYL	DOUBLE YELLOW LINE

ABBREVIATIONS

GENERAL

AADT	ANNUAL AVERAGE DAILY TRAFFIC
ABAN	ABANDON
ADJ	ADJUST
APPROX.	APPROXIMATE
A.C.	ASPHALT CONCRETE
ACCM PIPE	ASPHALT COATED CORRUGATED METAL PIPE
BIT.	BITUMINOUS
BC	BOTTOM OF CURB
BD.	BOUND
BL	BASELINE
BLDG	BUILDING
BM	BENCHMARK
BO	BY OTHERS
BOS	BOTTOM OF SLOPE
BR.	BRIDGE
CB	CATCH BASIN
CBCI	CATCH BASIN WITH CURB INLET
CC	CEMENT CONCRETE
CCM	CEMENT CONCRETE MASONRY
CEM	CEMENT
CI	CURB INLET
CIP	CAST IRON PIPE
CLF	CHAIN LINK FENCE
CL	CENTERLINE
CMP	CORRUGATED METAL PIPE
CSP	CORRUGATED STEEL PIPE
CO.	COUNTY
CONC	CONCRETE
CONT	CONTINUOUS
CONST	CONSTRUCTION
CR GR	CROWN GRADE
DHV	DESIGN HOURLY VOLUME
DI	DROP INLET
DIA	DIAMETER
DIP	DUCTILE IRON PIPE
DW	STEADY DON'T WALK - PORTLAND ORANGE
DWY	DRIVEWAY
ELEV (or EL.)	ELEVATION
EMB	EMBANKMENT
EOP	EDGE OF PAVEMENT
EXIST (or EX)	EXISTING
EXC	EXCAVATION
F&C	FRAME AND COVER
F&G	FRAME AND GRATE
FDN.	FOUNDATION
FLDSTN	FIELDSTONE
GAR	GARAGE
GD	GROUND
GG	GAS GATE
GI	GUTTER INLET
GIP	GALVANIZED IRON PIPE
GRAN	GRANITE
GRAV	GRAVEL
GRD	GUARD
HDW	HEADWALL
HMA	HOT MIX ASPHALT
HOR	HORIZONTAL
HYD	HYDRANT
INV	INVERT
JCT	JUNCTION
L	LENGTH OF CURVE
LB	LEACH BASIN
LP	LIGHT POLE
LT	LEFT
MAX	MAXIMUM
MB	MAILBOX
MH	MANHOLE
MHB	MASSACHUSETTS HIGHWAY BOUND
MIN	MINIMUM
NIC	NOT IN CONTRACT
NO.	NUMBER
PC	POINT OF CURVATURE
PCC	POINT OF COMPOUND CURVATURE
PCR	PEDESTRIAN CURB RAMP
P.G.L.	PROFILE GRADE LINE
PI	POINT OF INTERSECTION
POC	POINT ON CURVE
POT	POINT ON TANGENT
PRC	POINT OF REVERSE CURVATURE
PROJ	PROJECT
PROP	PROPOSED
PSB	PLANTABLE SOIL BORROW
PT	POINT OF TANGENCY
PVC	POINT OF VERTICAL CURVATURE
PVI	POINT OF VERTICAL INTERSECTION
PVT	POINT OF VERTICAL TANGENCY
PVMT	PAVEMENT
PWW	PAVED WATER WAY

WARE
PALMER ROAD (ROUTE 32) OVER WARE RIVER
BRIDGE NO. W-05-015

STATE	FED. AID PROJ. NO.	SHEET NO.	TOTAL SHEETS
MA	STP(BR-OFF)-003S(606)X	3	125
PROJECT FILE NO.	605126		

LEGEND & ABBREVIATIONS

ABBREVIATIONS (cont.)

GENERAL

R	RADIUS OF CURVATURE
R&D	REMOVE AND DISPOSE
RCP	REINFORCED CONCRETE PIPE
RD	ROAD
RDWY	ROADWAY
REM	REMOVE
RET	RETAIN
RET WALL	RETAINING WALL
ROW	RIGHT OF WAY
RR	RAILROAD
R&R	REMOVE AND RESET
R&S	REMOVE AND STACK
RT	RIGHT
SB	STONE BOUND
SHLD	SHOULDER
SMH	SEWER MANHOLE
ST	STREET
STA	STATION
SSD	STOPPING SIGHT DISTANCE
SHLO	STATE HIGHWAY LAYOUT LINE
SW	SIDEWALK
T	TANGENT DISTANCE OF CURVE/TRUCK %
TAN	TANGENT
TEMP	TEMPORARY
TC	TOP OF CURB
TOS	TOP OF SLOPE
TYP	TYPICAL
UP	UTILITY POLE
VAR	VARIES
VERT	VERTICAL
VC	VERTICAL CURVE
WG	WATER GATE
WIP	WROUGHT IRON PIPE
WM	WATER METER/WATER MAIN
X-SECT	CROSS SECTION

TRAFFIC SIGNAL ABBREVIATIONS

CAB	CABINET
CCVE	CLOSED CIRCUIT VIDEO EQUIPMENT
DW	STEADY UPRAISED HAND
FDW	FLASHING UPRAISED HAND
FR	FLASHING CIRCULAR RED
FRL	FLASHING RED LEFT ARROW
FRR	FLASHING RED RIGHT ARROW
FY	FLASHING CIRCULAR YELLOW
FYL	FLASHING YELLOW LEFT ARROW
FYR	FLASHING YELLOW RIGHT ARROW
G	STEADY CIRCULAR GREEN
GL	STEADY GREEN LEFT ARROW
GR	STEADY GREEN RIGHT ARROW
GSL	STEADY GREEN SLASH LEFT ARROW
GSR	STEADY GREEN SLASH RIGHT ARROW
GV	STEADY GREEN VERTICAL ARROW
OL	OVERLAP
PED	PEDESTRIAN
PTZ	PAN, TILT, ZOOM
R	STEADY CIRCULAR RED
RL	STEADY RED LEFT ARROW
RR	STEADY RED RIGHT ARROW
TR SIG	TRAFFIC SIGNAL
TSC	TRAFFIC SIGNAL CONDUIT
W	STEADY WALKING PERSON
Y	STEADY CIRCULAR YELLOW
YL	STEADY YELLOW LEFT ARROW

WARE
PALMER ROAD (ROUTE 32) OVER WARE RIVER
BRIDGE NO. W-05-015

STATE	FED. AID PROJ. NO.	SHEET NO.	TOTAL SHEETS
MA	STP(BR-OFF)-003S(606)X	4	125
PROJECT FILE NO.	605126		

KEY PLAN & BORING LOCATIONS

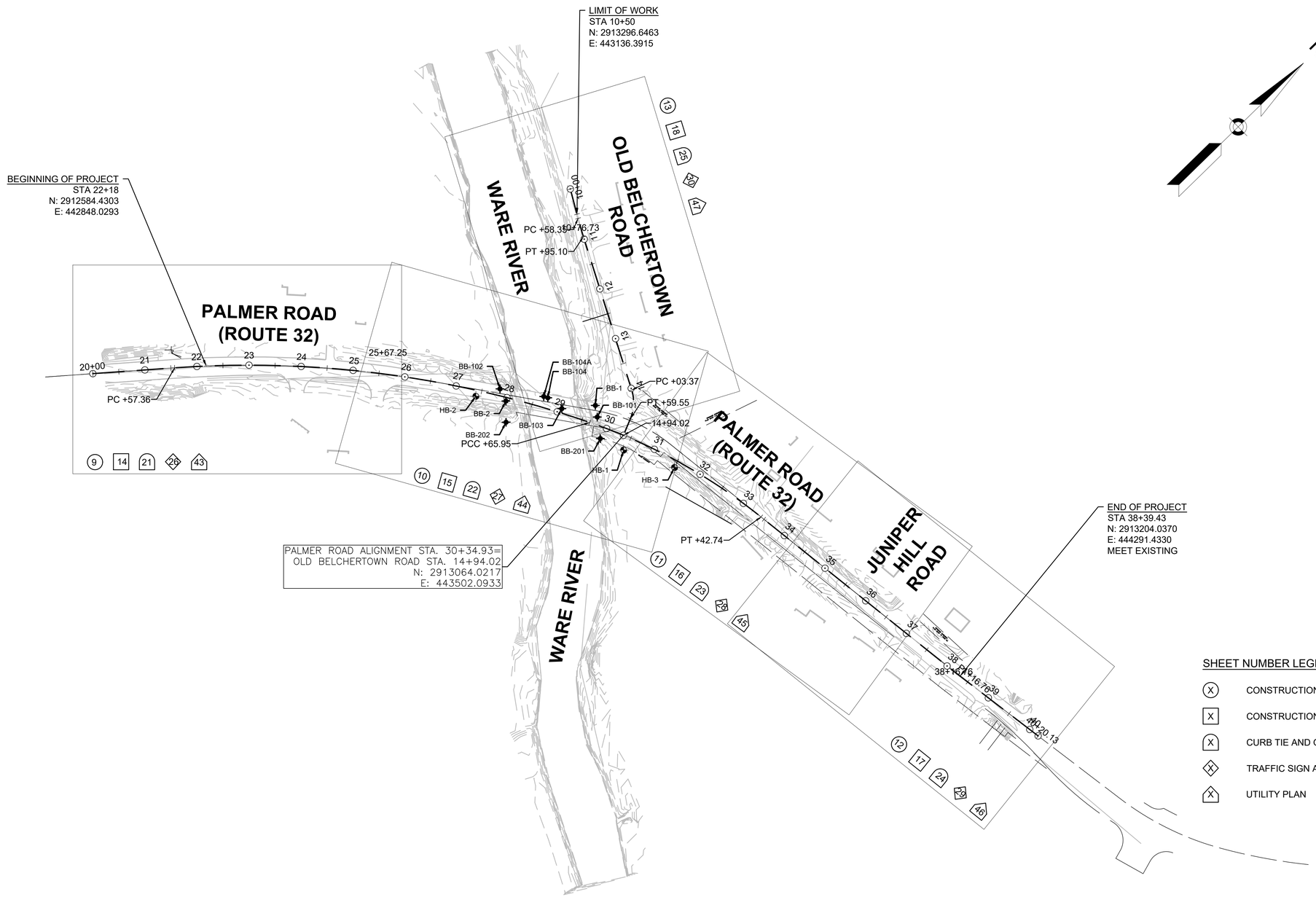

SHEET NUMBER LEGEND

- (X) CONSTRUCTION BASELINE TIES PLAN
- [X] CONSTRUCTION PLAN
- (X) CURB TIE AND GRADING PLANS
- ◇X TRAFFIC SIGN AND PAVEMENT MARKING PLAN
- ⬠X UTILITY PLAN

LEGEND

- ✦ BORING
- ⊕ HIGHWAY BORING

605126_HD_KEY PLAN.DWG Plotted on 19-Aug-22 1:10 PM

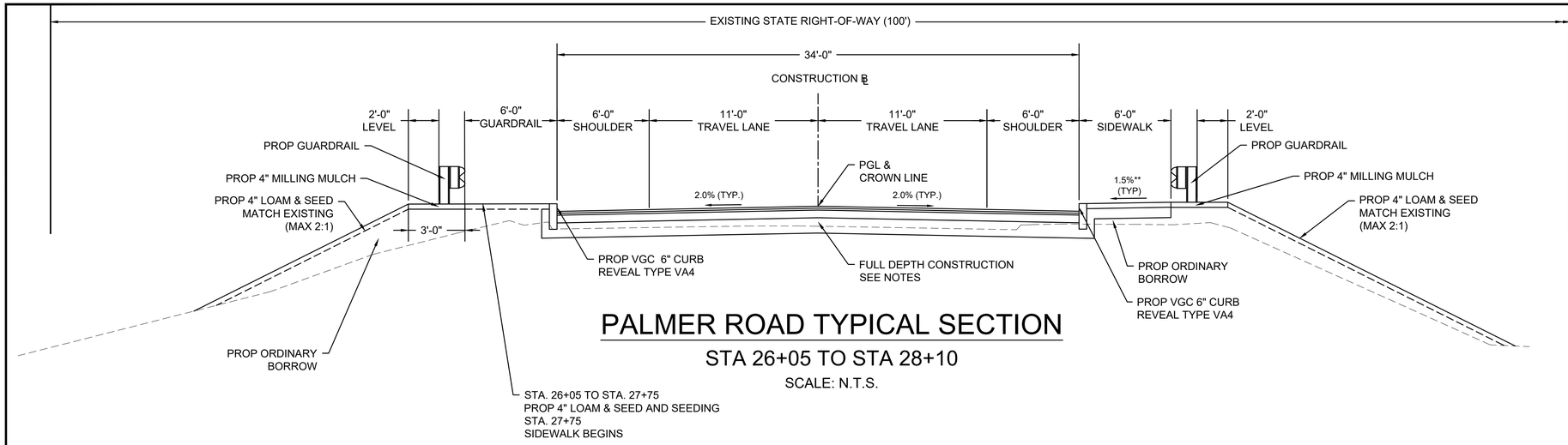

PALMER ROAD TYPICAL SECTION

STA 26+05 TO STA 28+10

SCALE: N.T.S.

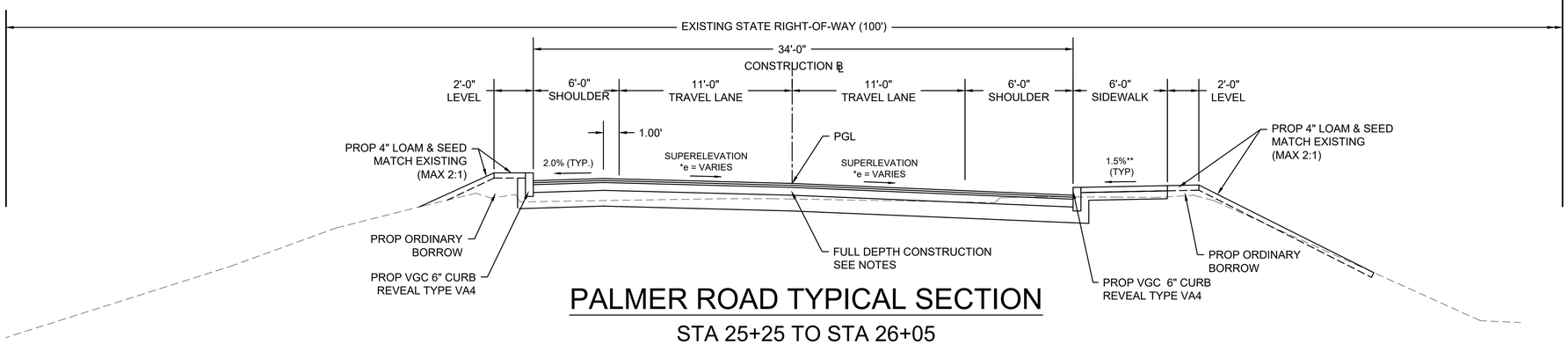

PALMER ROAD TYPICAL SECTION

STA 25+25 TO STA 26+05

SCALE: N.T.S.

*TRANSITION SUPERELEVATION TO 2% NORMAL CROWN FROM STA. 25+25 TO 26+05 SEE SUPERELEVATION DIAGRAM CONSTRUCTION DETAIL SHEET 8

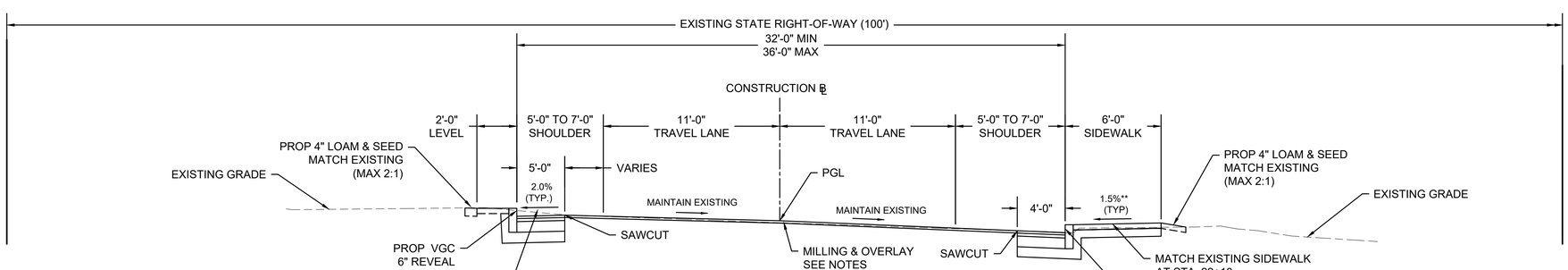

PALMER ROAD TYPICAL SECTION

STA 22+18 TO STA 25+25

SCALE: N.T.S.

WARE
PALMER ROAD (ROUTE 32) OVER WARE RIVER
BRIDGE NO. W-05-015

STATE	FED. AID PROJ. NO.	SHEET NO.	TOTAL SHEETS
MA	STP(BR-OFF)-003S(606)X	5	125
PROJECT FILE NO.	605126		

TYPICAL SECTIONS

PAVEMENT NOTES

PROPOSED FULL DEPTH CONSTRUCTION

SURFACE: 1.75" SUPERPAVE SURFACE COURSE - 12.5 - POLYMER (SSC-12.5-P)

INTERMEDIATE: 2.25" SUPERPAVE INTERMEDIATE COURSE - 19.0 (SIC-19.0)

BASE: 4" SUPERPAVE BASE COURSE - 37.5 (SBC-37.5)

SUB-BASE: 4" DENSE GRADED CRUSHED STONE
8" GRAVEL BORROW TYPE b OVER PROOF ROLLED SUBGRADE

PROPOSED FULL DEPTH PAVEMENT - PAVEMENT LESS THAN 6' WIDE

SURFACE: 1.75" SUPERPAVE SURFACE COURSE - 12.5 - POLYMER (SSC-12.5-P) OVER

INTERMEDIATE: 2.25" SUPERPAVE INTERMEDIATE COURSE - 19.0 (SIC-19.0)

BASE: 8" CEMENT CONCRETE BASE OVER

SUB-BASE: 8" GRAVEL BORROW TYPE B

PROPOSED MILLING AND PAVEMENT OVERLAY
- PALMER ROAD (ROUTE 32) AND OLD BELCHERTOWN ROAD

SURFACE: 1.75" SUPERPAVE SURFACE COURSE - 12.5 - POLYMER (SSC-12.5-P) MATERIAL PLACED IN ONE COURSE

MILLING 1.75" PAVEMENT FINE MILLING
VARIABLE DEPTH TO MEET PROPOSED GRADING
PAVEMENT OVERLAY SHALL MEET EXISTING PAVEMENT AT A SQUARE BUTT JOINT.

PROPOSED BRIDGE PAVEMENT

SURFACE: 1.50" SUPERPAVE BRIDGE SURFACE COURSE - 12.5 (SSC-B-12.5) OVER 1.50" SUPERPAVE BRIDGE PROTECTIVE COURSE 12.5 (SPC-B-12.5) OVER SPRAY APPLIED MEMBRANE WATERPROOFING.

HOT MIX ASPHALT DRIVEWAY

SURFACE: 1.5" SUPERPAVE SURFACE COURSE - 12.5 (SSC-12.5) OVER 2.5" SUPERPAVE SURFACE COURSE - 12.5 (SSC-12.5)

SUB-BASE: REMOVE EXISTING ASPHALT PAVEMENT,
8" GRAVEL BORROW

PROPOSED CEMENT CONCRETE WALK

SURFACE: 4" CEMENT CONCRETE OVER

SUB-BASE: 8" GRAVEL BORROW

LOAM AND SEED

SURFACE: 4" LOAM BORROW SEEDED

TEMPORARY PAVEMENT

SURFACE: 3" MIN SUPERPAVE BASE COURSE - 37.5 (SBC-37.5)

NOTES:

1. ASPHALT EMULSION FOR TACK COAT SHALL BE APPLIED FOR UNIFORM COVERAGE RATE OF 0.06 TO 0.08 GAL./SY OVER HMA BASE COURSE AND INTERMEDIATE COURSE, AND 0.07 TO 0.09 GAL./SY ON MILLED PAVEMENT PRIOR TO PAVING WITH SUPERPAVE HMA .
2. HMA BRIDGE PROTECTIVE COURSE SHALL BE APPLIED OVER SPRAY APPLIED MEMBRANE WATERPROOFING PER SPECIFICATIONS.
3. SEE SECTIONS FOR SAWCUT LOCATIONS
4. MATCH EXISTING CROSS SLOPE AT PROJECT LIMITS.
5. "**" DENOTES A TYPICAL ALLOWABLE CONSTRUCTION TOLERANCE OF ±0.5%.

605126_HD_TYPICAL SECTIONS.DWG Plotted on 19-Aug-22 1:10 PM

WARE
PALMER ROAD (ROUTE 32) OVER WARE RIVER
BRIDGE NO. W-05-015

STATE	FED. AID PROJ. NO.	SHEET NO.	TOTAL SHEETS
MA	STP(BR-OFF)-003S(606)X	6	125
PROJECT FILE NO.	605126		

TYPICAL SECTIONS

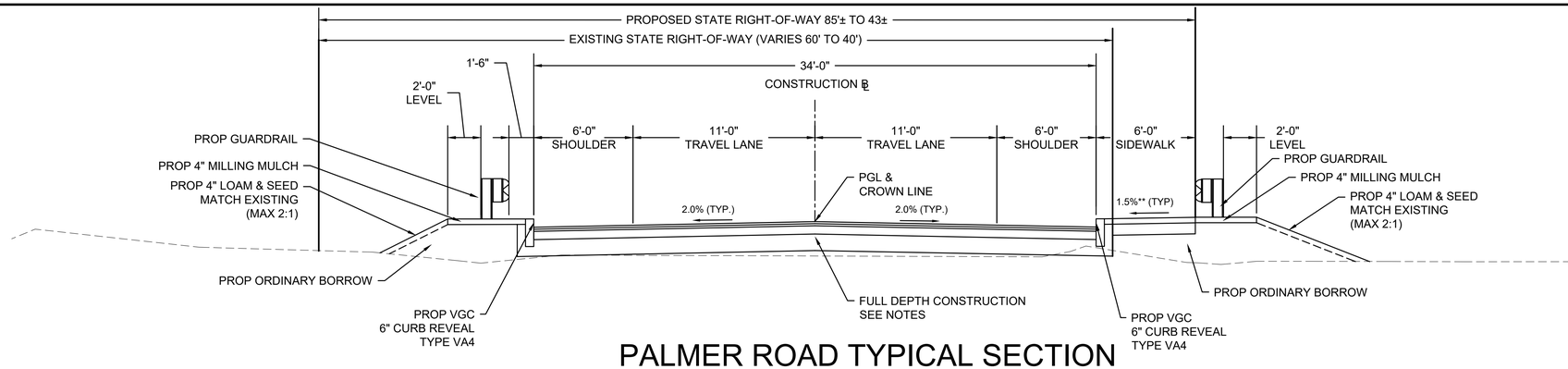

PALMER ROAD TYPICAL SECTION

STA 30+70 TO STA 33+42.74

SCALE: N.T.S.

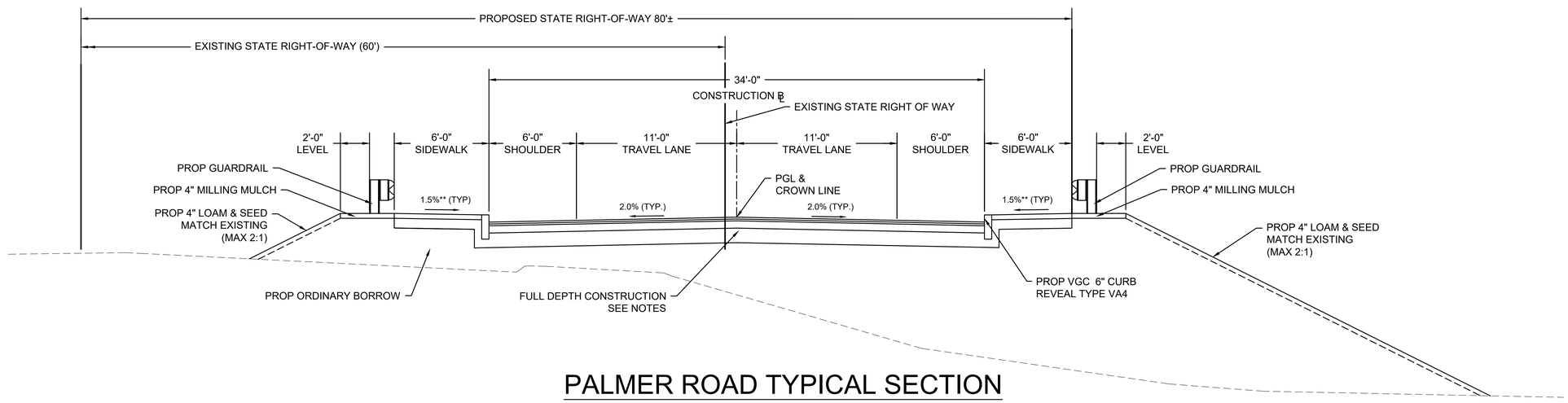

PALMER ROAD TYPICAL SECTION

STA 29+75 TO STA 30+70

SCALE: N.T.S.

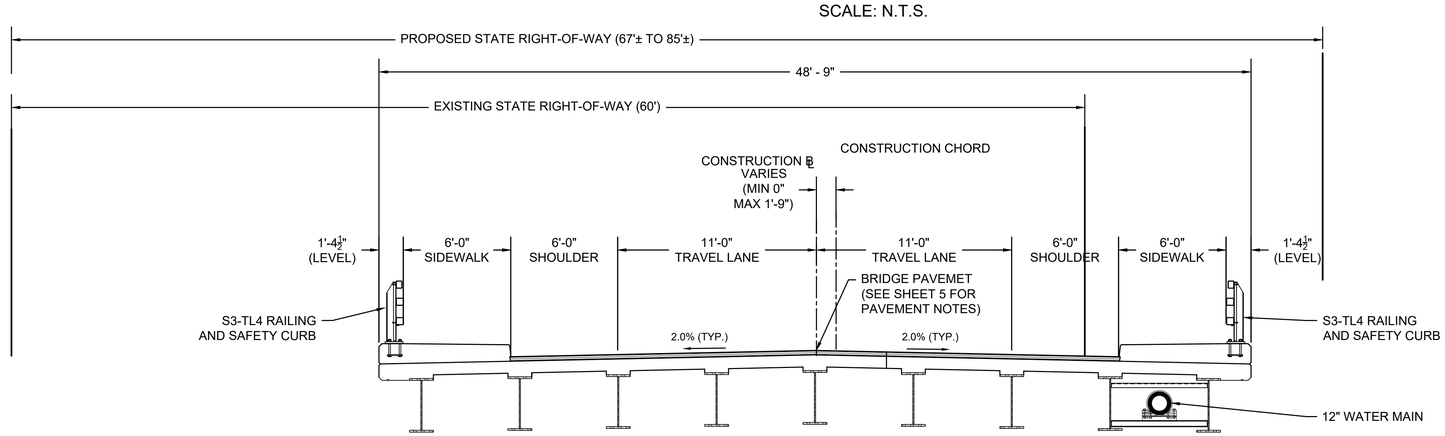

BRIDGE W-05-015 TYPICAL SECTION

STA 28+10 TO STA 29+75

SCALE: N.T.S.

605126_HD_TYPICAL SECTIONS.DWG Plotted on 19-Aug-22 1:10 PM

WARE
PALMER ROAD (ROUTE 32) OVER WARE RIVER
BRIDGE NO. W-05-015

STATE	FED. AID PROJ. NO.	SHEET NO.	TOTAL SHEETS
MA	STP(BR-OFF)-003S(606)X	7	125
PROJECT FILE NO.	605126		

TYPICAL SECTIONS

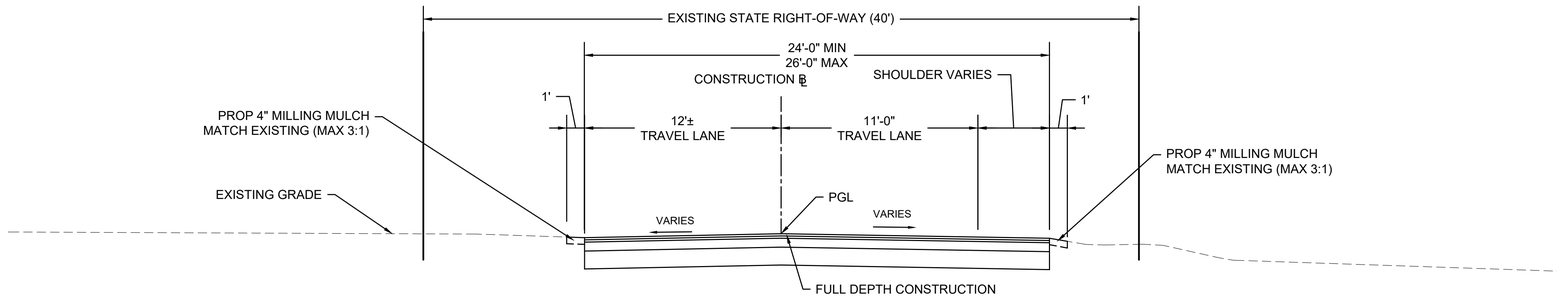

PALMER ROAD TYPICAL SECTION

STA 37+12.03 TO STA 37+89.43 FULL DEPTH CONSTRUCTION
STA 37+89.43 TO STA 38+39.43 MILL AND OVERLAY

SCALE: N.T.S.

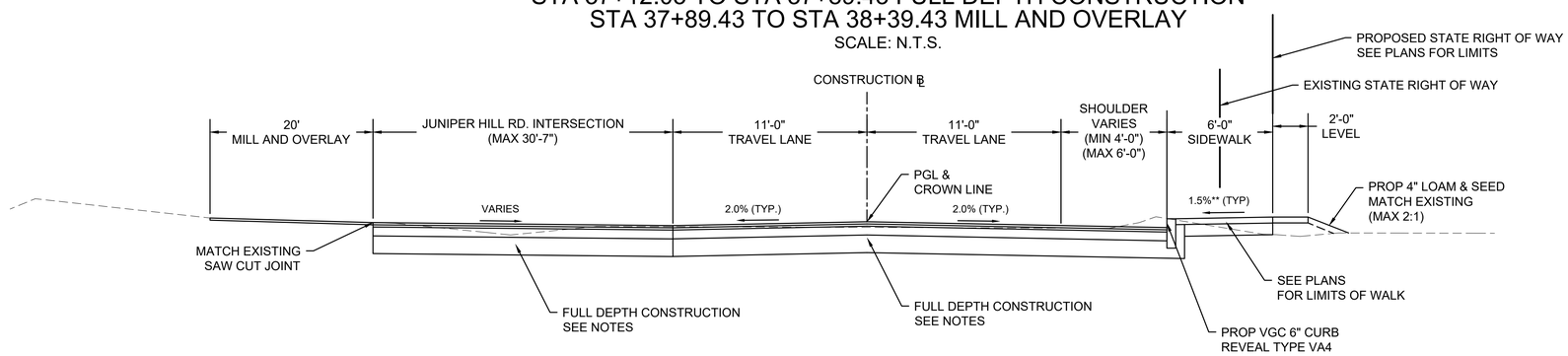

PALMER ROAD TYPICAL SECTION

STA 36+50 TO STA 37+12.03

SCALE: N.T.S.

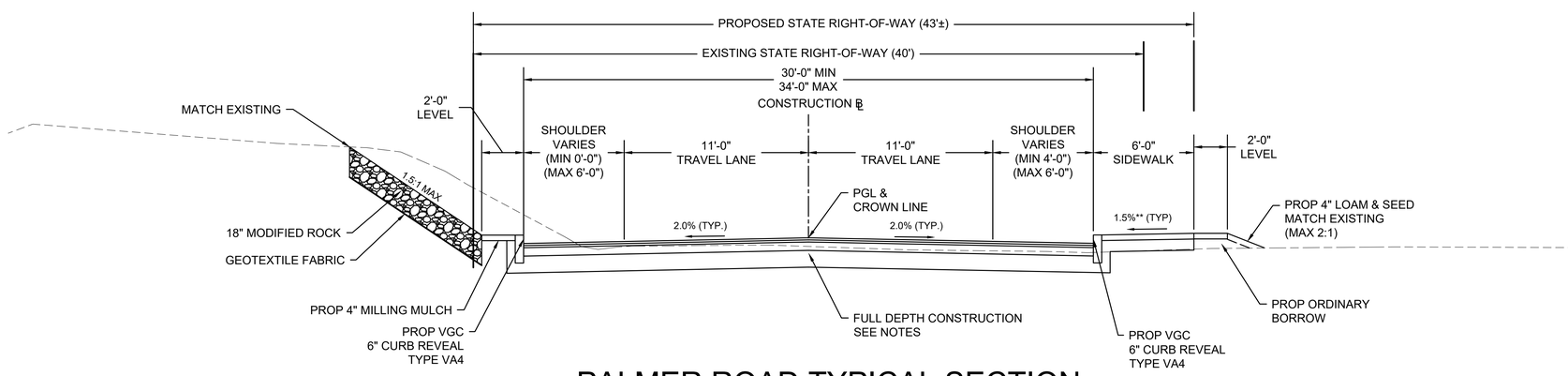

PALMER ROAD TYPICAL SECTION

STA 33+40 TO STA 36+50

SCALE: N.T.S.

605126_HD_TYPICAL SECTIONS.DWG Plotted on 19-Aug-22 1:10 PM

WARE
PALMER ROAD (ROUTE 32) OVER WARE RIVER
BRIDGE NO. W-05-015

STATE	FED. AID PROJ. NO.	SHEET NO.	TOTAL SHEETS
MA	STP(BR-OFF)-003S(606)X	8	125
PROJECT FILE NO.	605126		

TYPICAL SECTIONS

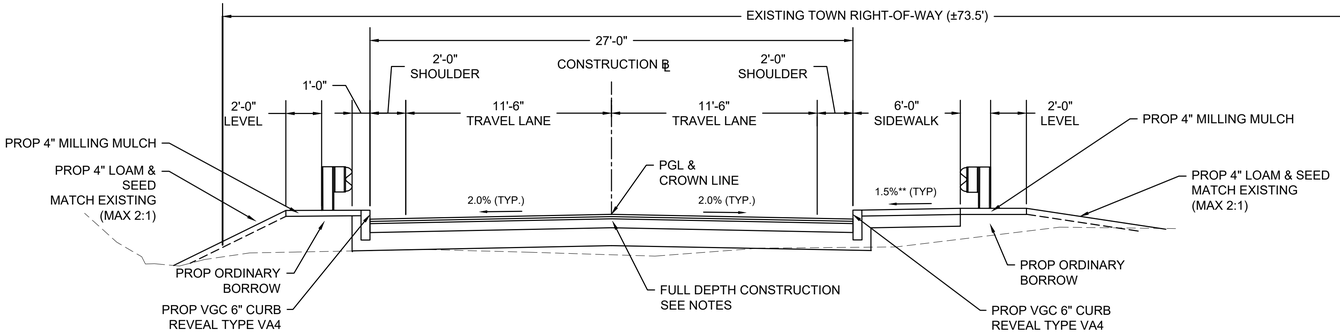

OLD BELCHERTOWN ROAD TYPICAL SECTION

STA 13+71 TO STA 14+65

SCALE: N.T.S.

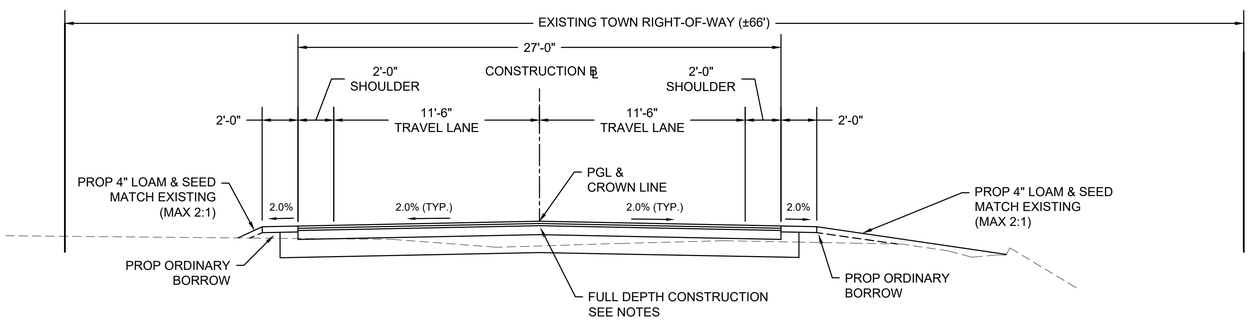

OLD BELCHERTOWN ROAD TYPICAL SECTION

STA 11+00 TO STA 13+71

SCALE: N.T.S.

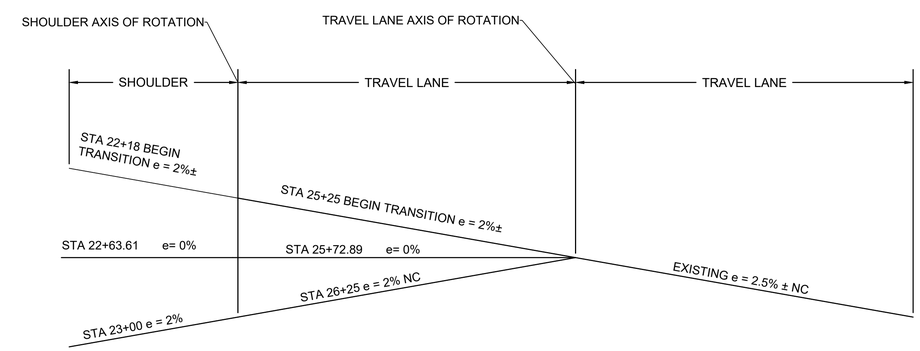

PALMER ROAD SUPERELEVATION DIAGRAM

STA 22+18 TO STA 26+25

SCALE: N.T.S.

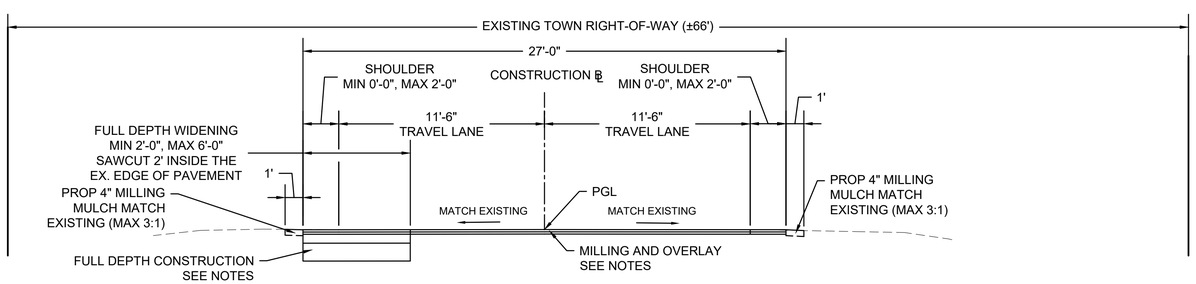

OLD BELCHERTOWN ROAD TYPICAL SECTION

STA 10+50 TO STA 11+00

SCALE: N.T.S.

605126_HD_TYPICAL SECTIONS.DWG Plotted on 19-Aug-22 1:10 PM

WARE
PALMER ROAD (ROUTE 32) OVER WARE RIVER
BRIDGE NO. W-05-015

STATE	FED. AID PROJ. NO.	SHEET NO.	TOTAL SHEETS
MA	STP(BR-OFF)-003S(606)X	9	125
PROJECT FILE NO.	605126		

CONSTRUCTION BASELINE TIES

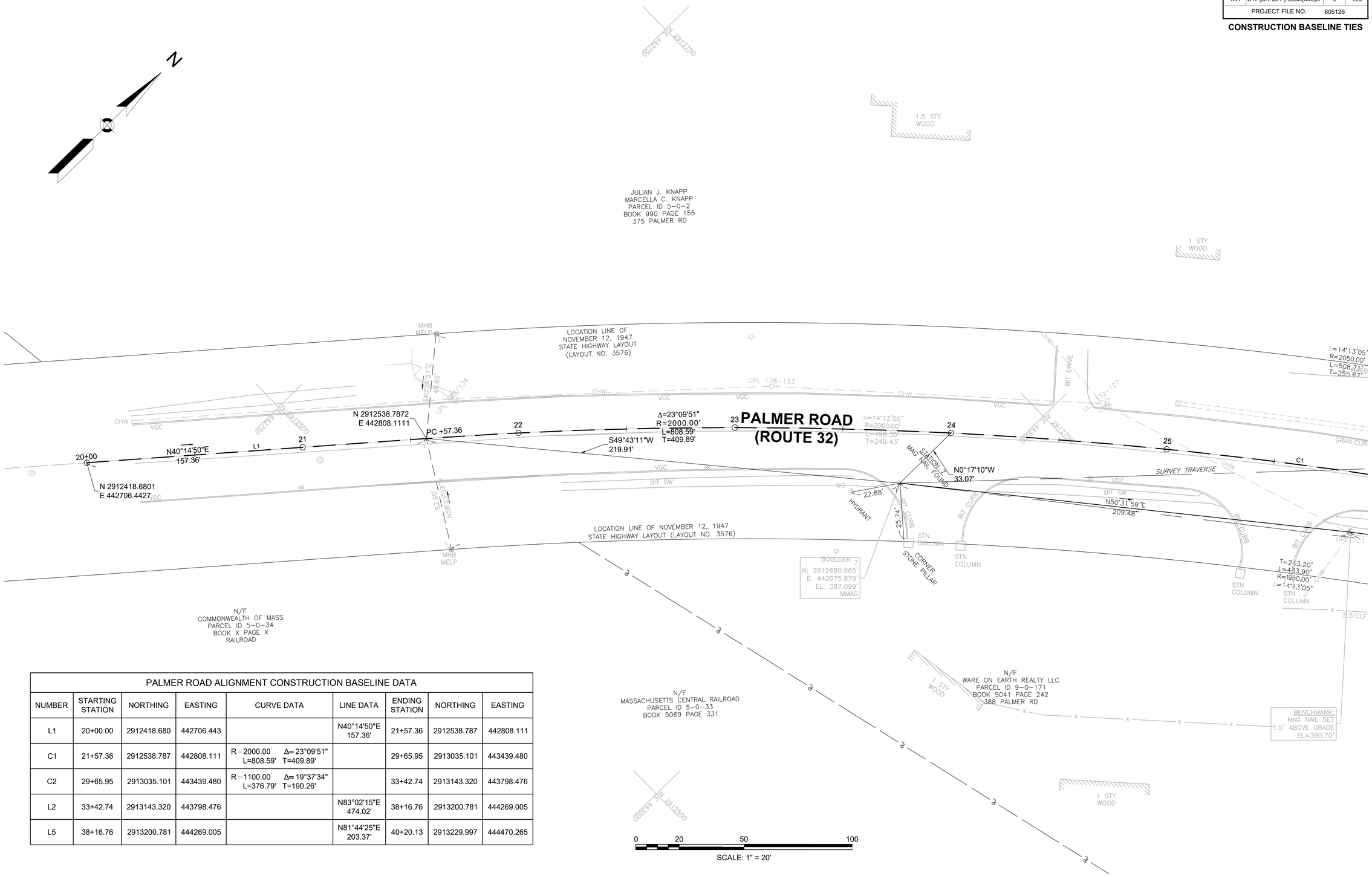

PALMER ROAD ALIGNMENT CONSTRUCTION BASELINE DATA								
NUMBER	STARTING STATION	NORTHING	EASTING	CURVE DATA	LINE DATA	ENDING STATION	NORTHING	EASTING
L1	20+00.00	2912418.680	442706.443		N40°14'50"E 157.36'	21+57.36	2912538.787	442808.111
C1	21+57.36	2912538.787	442808.111	R=2000.00' Δ=23°09'51" L=808.59' T=409.89'		29+65.95	2913035.101	443439.480
C2	29+65.95	2913035.101	443439.480	R=1100.00' Δ=19°37'34" L=376.79' T=190.26'		33+42.74	2913143.320	443798.476
L2	33+42.74	2913143.320	443798.476		N83°02'15"E 474.02'	38+16.76	2913200.781	444269.005
L5	38+16.76	2913200.781	444269.005		N81°44'25"E 203.37'	40+20.13	2913229.997	444470.265

CONTINUED ON SHEET NO. 10

605126_HD_BASELINE TIES.DWG Plotted on 19-Aug-22 1:10 PM

WARE
PALMER ROAD (ROUTE 32) OVER WARE RIVER
BRIDGE NO. W-05-015

STATE	FED. AID PROJ. NO.	SHEET NO.	TOTAL SHEETS
MA	STP(BR-OFF)-003S(606)X	10	125
PROJECT FILE NO.	605126		

CONSTRUCTION BASELINE TIES

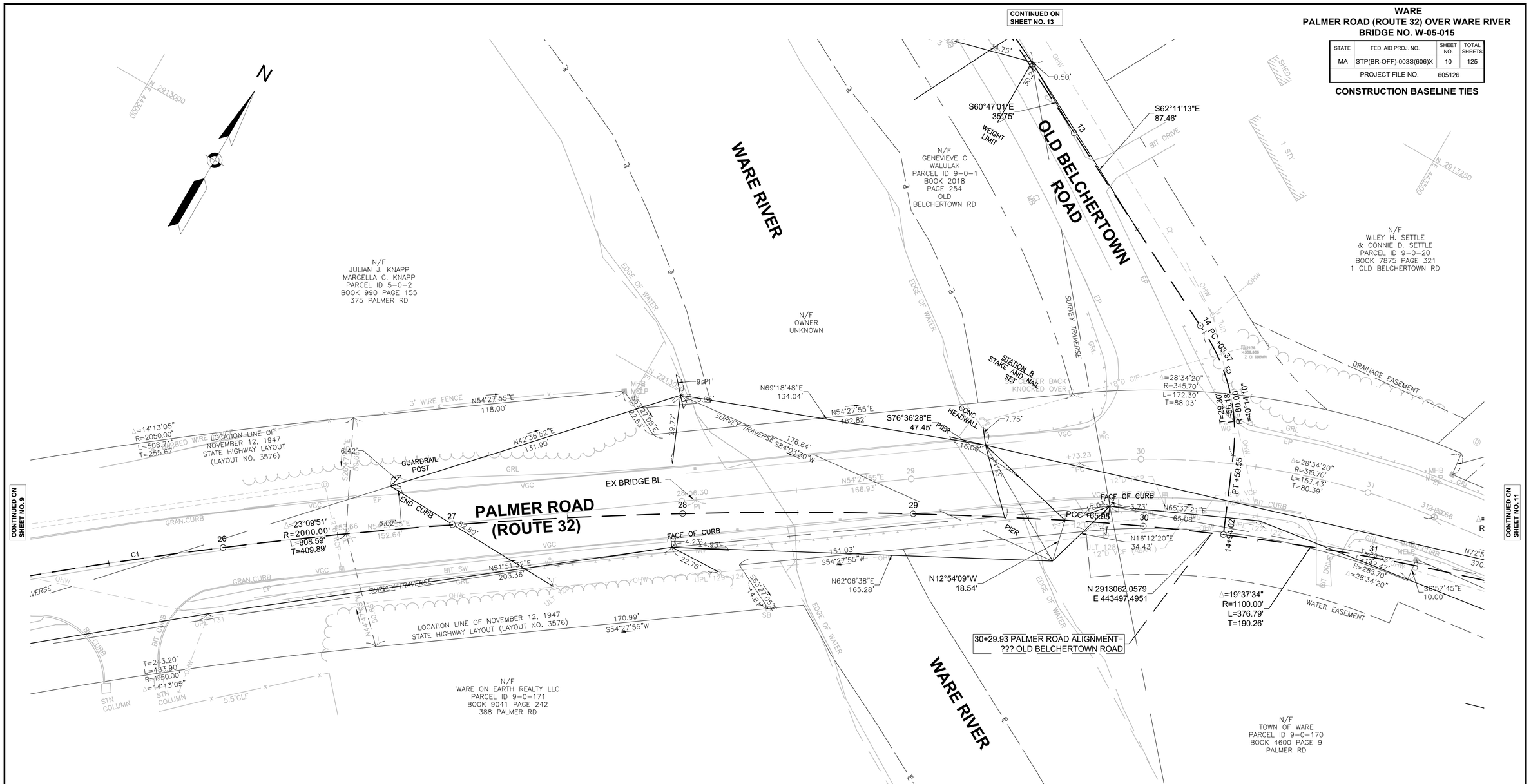

PALMER ROAD ALIGNMENT CONSTRUCTION BASELINE DATA

NUMBER	STARTING STATION	NORTHING	EASTING	CURVE DATA	LINE DATA	ENDING STATION	NORTHING	EASTING
L1	20+00.00	2912418.680	442706.443		N40°14'50"E 157.36'	21+57.36	2912538.787	442808.111
C1	21+57.36	2912538.787	442808.111	R=2000.00' Δ=23°09'51" L=808.59' T=409.89'		29+65.95	2913035.101	443439.480
C2	29+65.95	2913035.101	443439.480	R=1100.00' Δ=19°37'34" L=376.79' T=190.26'		33+42.74	2913143.320	443798.476
L2	33+42.74	2913143.320	443798.476		N83°02'15"E 474.02'	38+16.76	2913200.781	444269.005
L5	38+16.76	2913200.781	444269.005		N81°44'25"E 203.37'	40+20.13	2913229.997	444470.265

605126_HD_BASELINE TIES.DWG Plotted on 19-Aug-22 1:10 PM

WARE
PALMER ROAD (ROUTE 32) OVER WARE RIVER
BRIDGE NO. W-05-015

STATE	FED. AID PROJ. NO.	SHEET NO.	TOTAL SHEETS
MA	STP(BR-OFF)-003S(606)X	11	125
PROJECT FILE NO.	605126		

CONSTRUCTION BASELINE TIES

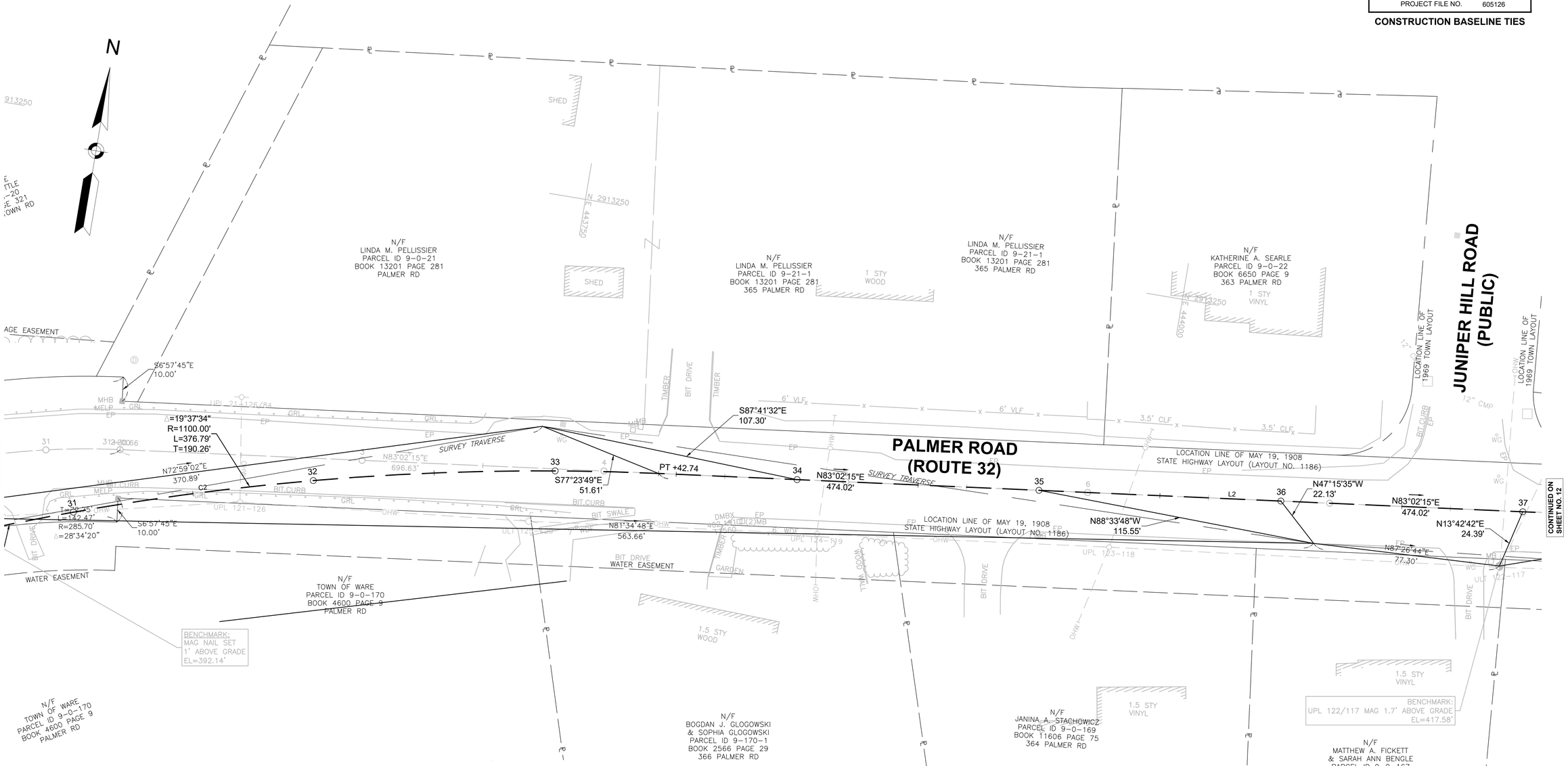

PALMER ROAD ALIGNMENT CONSTRUCTION BASELINE DATA

NUMBER	STARTING STATION	NORTHING	EASTING	CURVE DATA	LINE DATA	ENDING STATION	NORTHING	EASTING
L1	20+00.00	2912418.680	442706.443		N40°14'50"E 157.36'	21+57.36	2912538.787	442808.111
C1	21+57.36	2912538.787	442808.111	R=2000.00' Δ=23°09'51" L=808.59' T=409.89'		29+65.95	2913035.101	443439.480
C2	29+65.95	2913035.101	443439.480	R=1100.00' Δ=19°37'34" L=376.79' T=190.26'		33+42.74	2913143.320	443798.476
L2	33+42.74	2913143.320	443798.476		N83°02'15"E 474.02'	38+16.76	2913200.781	444269.005
L5	38+16.76	2913200.781	444269.005		N81°44'25"E 203.37'	40+20.13	2913229.997	444470.265

605126_HD_BASELINE TIES.DWG Plotted on 19-Aug-22 1:10 PM

WARE
PALMER ROAD (ROUTE 32) OVER WARE RIVER
BRIDGE NO. W-05-015

STATE	FED. AID PROJ. NO.	SHEET NO.	TOTAL SHEETS
MA	STP(BR-OFF)-003S(606)X	12	125
PROJECT FILE NO.	605126		

CONSTRUCTION BASELINE TIES

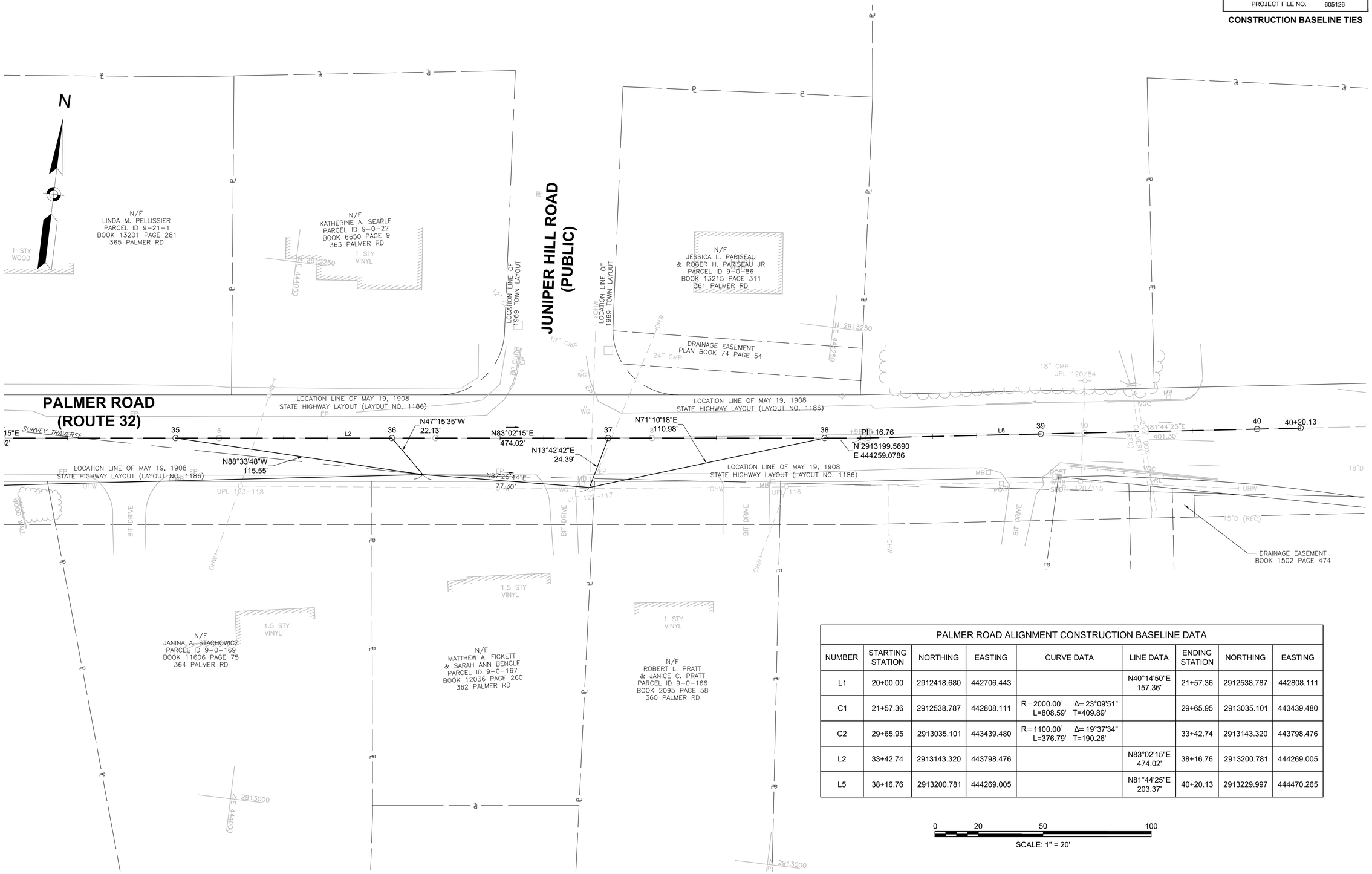

PALMER ROAD ALIGNMENT CONSTRUCTION BASELINE DATA

NUMBER	STARTING STATION	NORTHING	EASTING	CURVE DATA	LINE DATA	ENDING STATION	NORTHING	EASTING
L1	20+00.00	2912418.680	442706.443		N40°14'50"E 157.36'	21+57.36	2912538.787	442808.111
C1	21+57.36	2912538.787	442808.111	R=2000.00' Δ=23°09'51" L=808.59' T=409.89'		29+65.95	2913035.101	443439.480
C2	29+65.95	2913035.101	443439.480	R=1100.00' Δ=19°37'34" L=376.79' T=190.26'		33+42.74	2913143.320	443798.476
L2	33+42.74	2913143.320	443798.476		N83°02'15"E 474.02'	38+16.76	2913200.781	444269.005
L5	38+16.76	2913200.781	444269.005		N81°44'25"E 203.37'	40+20.13	2913229.997	444470.265

605126_HD_BASELINE TIES.DWG Plotted on 19-Aug-22 1:10 PM

WARE
PALMER ROAD (ROUTE 32) OVER WARE RIVER
BRIDGE NO. W-05-015

STATE	FED. AID PROJ. NO.	SHEET NO.	TOTAL SHEETS
MA	STP(BR-OFF)-003S(606)X	13	125
PROJECT FILE NO.	605126		

CONSTRUCTION BASELINE TIES

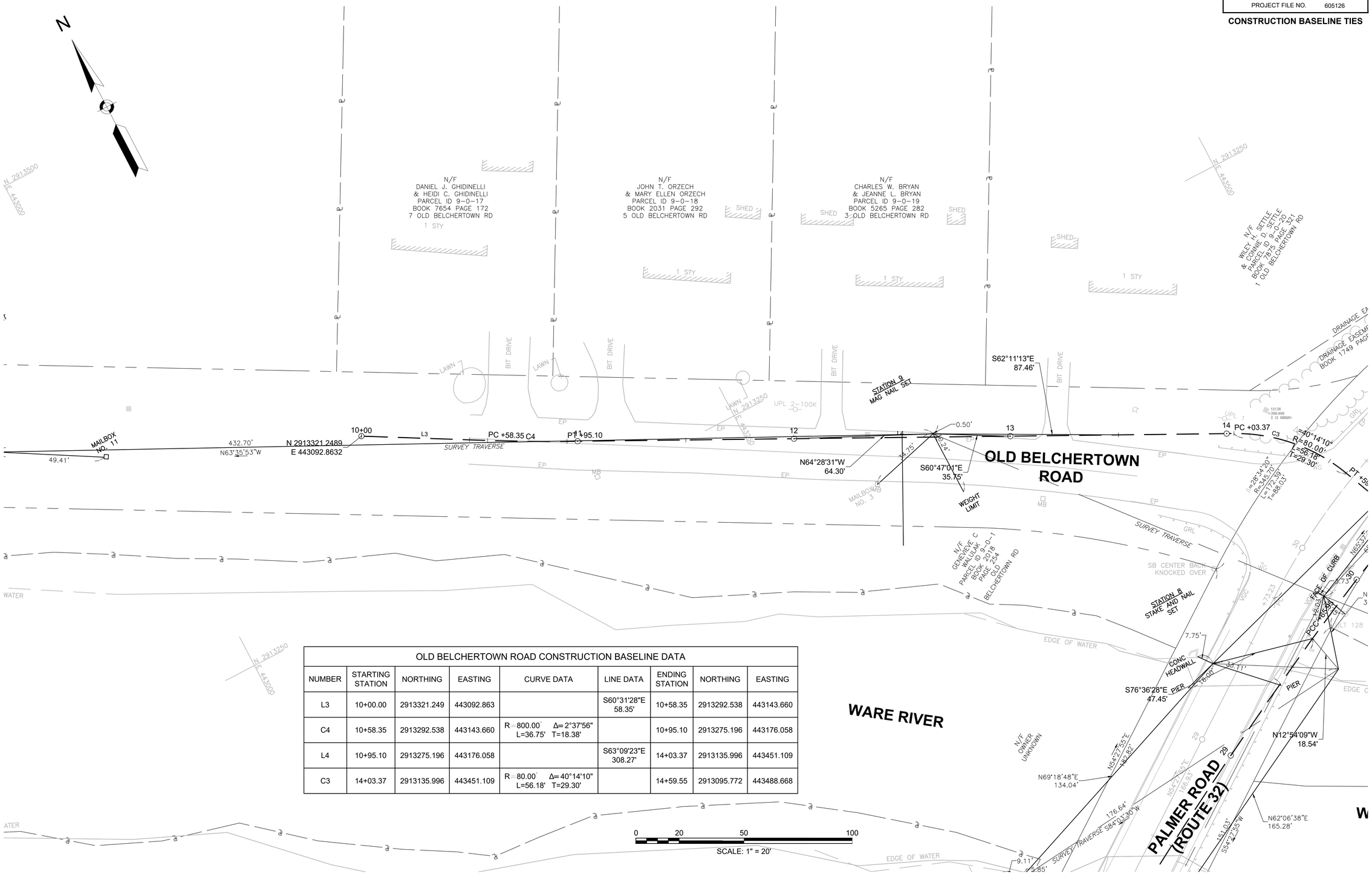

OLD BELCHERTOWN ROAD CONSTRUCTION BASELINE DATA								
NUMBER	STARTING STATION	NORTHING	EASTING	CURVE DATA	LINE DATA	ENDING STATION	NORTHING	EASTING
L3	10+00.00	2913321.249	443092.863		S60°31'28"E 58.35'	10+58.35	2913292.538	443143.660
C4	10+58.35	2913292.538	443143.660	R=800.00' Δ=2°37'56" L=36.75' T=18.38'		10+95.10	2913275.196	443176.058
L4	10+95.10	2913275.196	443176.058		S63°09'23"E 308.27'	14+03.37	2913135.996	443451.109
C3	14+03.37	2913135.996	443451.109	R=80.00' Δ=40°14'10" L=56.18' T=29.30'		14+59.55	2913095.772	443488.668

CONTINUED ON SHEET NO. 10

605126_HD_BASELINE TIES.DWG Plotted on 19-Aug-22 1:10 PM

WARE
PALMER ROAD (ROUTE 32) OVER WARE RIVER
BRIDGE NO. W-05-015

STATE	FED. AID PROJ. NO.	SHEET NO.	TOTAL SHEETS
MA	STP(BR-OFF)-003S(606)X	14	125
PROJECT FILE NO.	605126		

CONSTRUCTION PLANS

HIGHWAY GUARD DETAILS	TRAFFIC SIGNAL CONDUIT	WATER SUPPLY ALTERATIONS	DRAINAGE DETAILS
NONE	NONE	SEE SHEETS 44-48	SEE SHEETS 44-48

FULL DEPTH RECONSTRUCTION

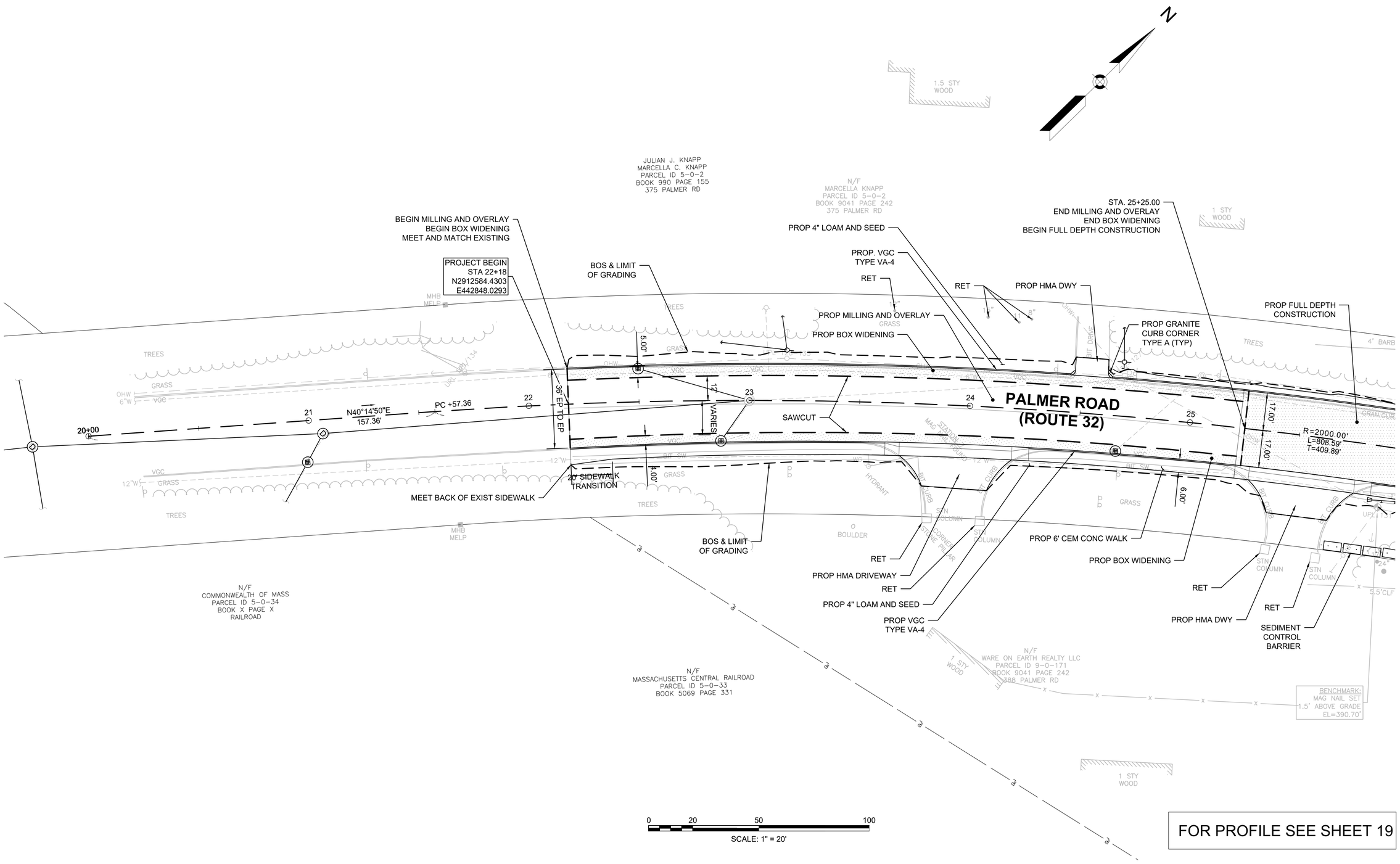

CONTINUED ON SHEET NO.15

FOR PROFILE SEE SHEET 19

605126_HD_CONST PLANS.DWG Plotted on 19-Aug-22 1:10 PM

WARE
PALMER ROAD (ROUTE 32) OVER WARE RIVER
BRIDGE NO. W-05-015

STATE	FED. AID PROJ. NO.	SHEET NO.	TOTAL SHEETS
MA	STP(BR-OFF)-003S(606)X	15	125
PROJECT FILE NO.	605126		

CONSTRUCTION PLANS

CONTINUED ON SHEET NO. 18

FULL DEPTH RECONSTRUCTION

HIGHWAY GUARD DETAILS

TANGENT END TREATMENT TL-3 - STA 25+85 RT TO STA 26+00 RT
GUARDRAIL TL-3 (SINGLE FACED) - STA 26+00 RT - STA 27+73 RT
TRANSITION TO BRIDGE RAIL - STA 27+73 RT - STA 28+08 RT

TANGENT END TREATMENT TL-3 - STA 26+80 LT - STA 26+95 LT
GUARDRAIL TL-3 (SINGLE FACED) - STA 26+95 LT - STA 27+49 LT
TRANSITION TO BRIDGE RAIL - STA 27+49 LT - STA 27+83 LT

TRANSITION TO BRIDGE RAIL - STA 30+04 RT - STA 30+37 RT
GUARDRAIL TL-3 (SINGLE FACED) - STA 30+37 RT - STA 32+75 RT
TANGENT END TREATMENT TL-3 - STA 32+75 RT - STA 32+90 RT

TANGENT END TREATMENT TL-3 - STA 30+15 LT TO STA 30+28 LT
GUARDRAIL TL-3 (CURVED,SINGLE FACED) - STA 30+28 LT - STA 30+36 LT
GUARDRAIL TL-3 (CURVED, SINGLE FACED) - STA 30+36 LT - STA 30+82 LT
GUARDRAIL TL-3 (SINGLE FACED) - STA 30+82 LT - STA 32+61 LT
TANGENT END TREATMENT TL-3 - STA 32+61 LT - STA 32+76 LT

MODIFIED TRANSITION TO BRIDGE RAIL - STA 29+66 LT (RTE 32) - STA 13+70 RT
(OLD BELCHERTOWN RD.) SEE SHEETS 50 AND 51 FOR DETAIL

TRAFFIC SIGNAL CONDUIT

NONE

WATER SUPPLY ALTERATIONS

SEE SHEETS 44-48

DRAINAGE DETAILS

SEE SHEETS 44-48

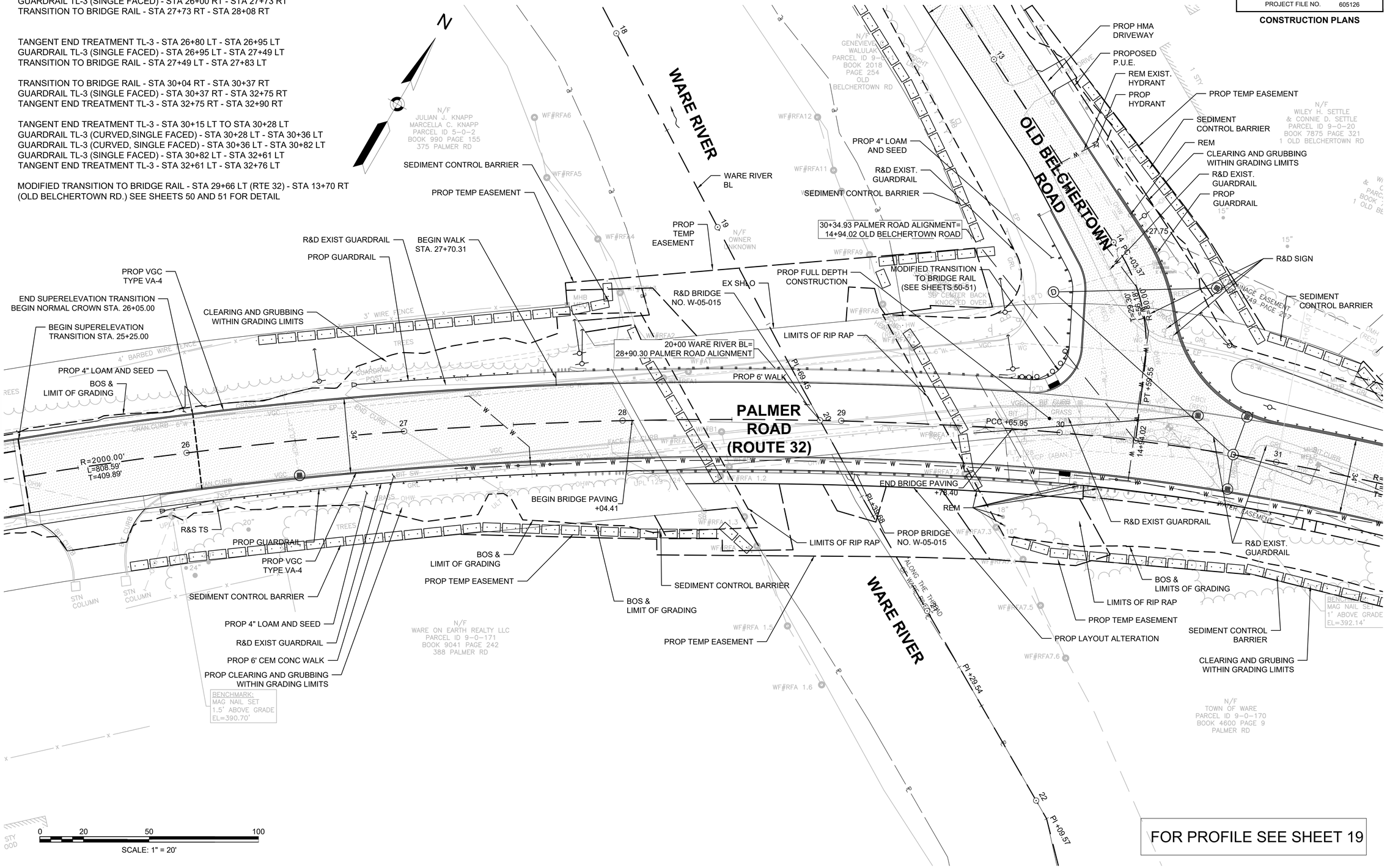

CONTINUED ON SHEET NO. 14

CONTINUED ON SHEET NO. 16

FOR PROFILE SEE SHEET 19

605126_HD_CONST PLANS.DWG Plotted on 19-Aug-22 1:10 PM

WARE
PALMER ROAD (ROUTE 32) OVER WARE RIVER
BRIDGE NO. W-05-015

STATE	FED. AID PROJ. NO.	SHEET NO.	TOTAL SHEETS
MA	STP(BR-OFF)-003S(606)X	16	125
PROJECT FILE NO.	605126		

CONSTRUCTION PLANS

FULL DEPTH RECONSTRUCTION

N

HIGHWAY GUARD DETAILS

TANGENT END TREATMENT:
STA 32+76.85 19' LT
STA 33+90.45 23' RT

PROP TRAILING ANCHORAGE END SECTION:
STA 32+80.35 23' RT - STA 33+90.45 23' RT
STA 32+64.35 19' LT - STA 32+76.85 19' LT

PROP W BEAM:
STA 31+45 23' RT - STA 32+80.35 23' RT
STA 31+45 19' LT - STA 32+64.35 19' LT

TRAFFIC SIGNAL CONDUIT

NONE

WATER SUPPLY ALTERATIONS

SEE SHEETS 44-48

DRAINAGE DETAILS

SEE SHEETS 44-48

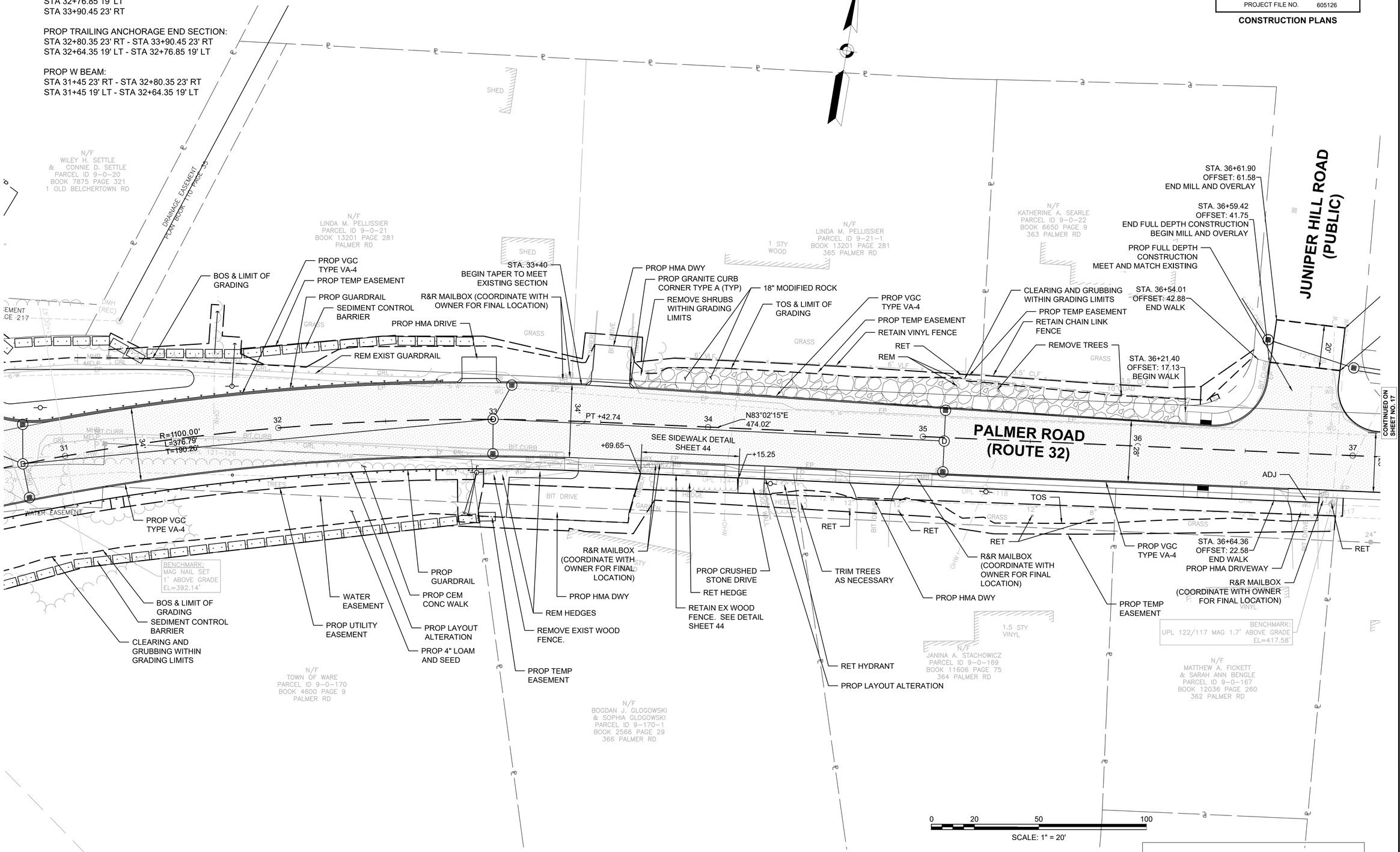

FOR PROFILE SEE SHEET 19

605126_HD_CONST PLANS.DWG Plotted on 19-Aug-22 1:10 PM

WARE
PALMER ROAD (ROUTE 32) OVER WARE RIVER
BRIDGE NO. W-05-015

STATE	FED. AID PROJ. NO.	SHEET NO.	TOTAL SHEETS
MA	STP(BR-OFF)-003S(606)X	17	125
PROJECT FILE NO.	605126		

CONSTRUCTION PLANS

605126_HD_CONST PLANS.DWG Plotted on 19-Aug-22 1:10 PM

HIGHWAY GUARD DETAILS
NONE

TRAFFIC SIGNAL CONDUIT
NONE

WATER SUPPLY ALTERATIONS
SEE SHEETS 44-48

DRAINAGE DETAILS
SEE SHEETS 44-48

FULL DEPTH RECONSTRUCTION

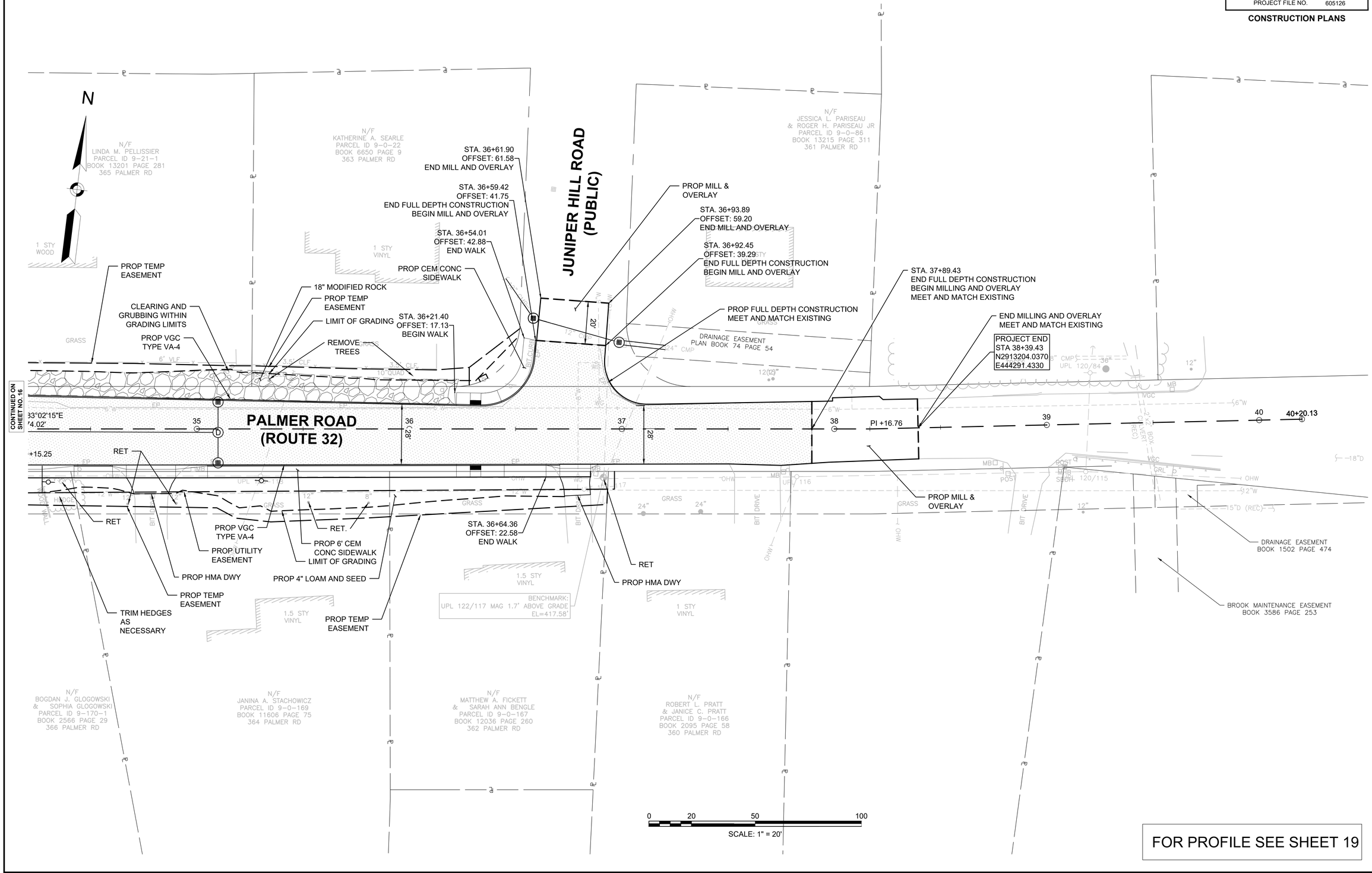

FOR PROFILE SEE SHEET 19

WARE
PALMER ROAD (ROUTE 32) OVER WARE RIVER
BRIDGE NO. W-05-015

STATE	FED. AID PROJ. NO.	SHEET NO.	TOTAL SHEETS
MA	STP(BR-OFF)-003S(606)X	18	125
PROJECT FILE NO.	605126		

CONSTRUCTION PLANS

HIGHWAY GUARD DETAILS
REFER TO SHEET 15

TRAFFIC SIGNAL CONDUIT
NONE

WATER SUPPLY ALTERATIONS
SEE SHEETS 44-48

DRAINAGE DETAILS
SEE SHEETS 44-48

FULL DEPTH RECONSTRUCTION

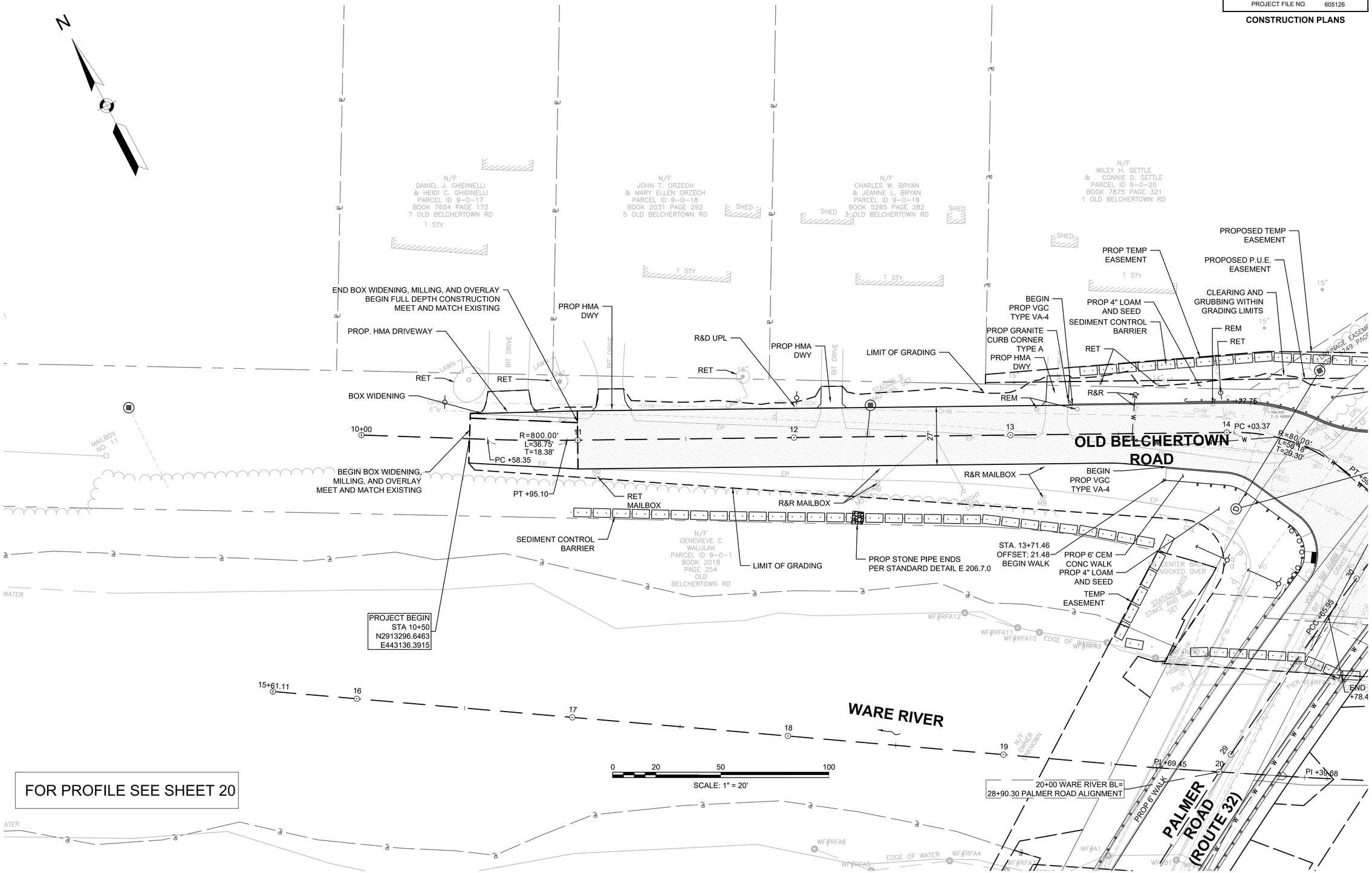

FOR PROFILE SEE SHEET 20

CONTINUED ON SHEET NO. 15

605126_HD_CONST PLANS.DWG Plotted on 19-Aug-22 1:10 PM

WARE
PALMER ROAD (ROUTE 32) OVER WARE RIVER
BRIDGE NO. W-05-015

STATE	FED. AID PROJ. NO.	SHEET NO.	TOTAL SHEETS
MA	STP(BR-OFF)-003S(606)X	19	125
PROJECT FILE NO.	605126		

PROFILE
PALMER ROAD (ROUTE 32)

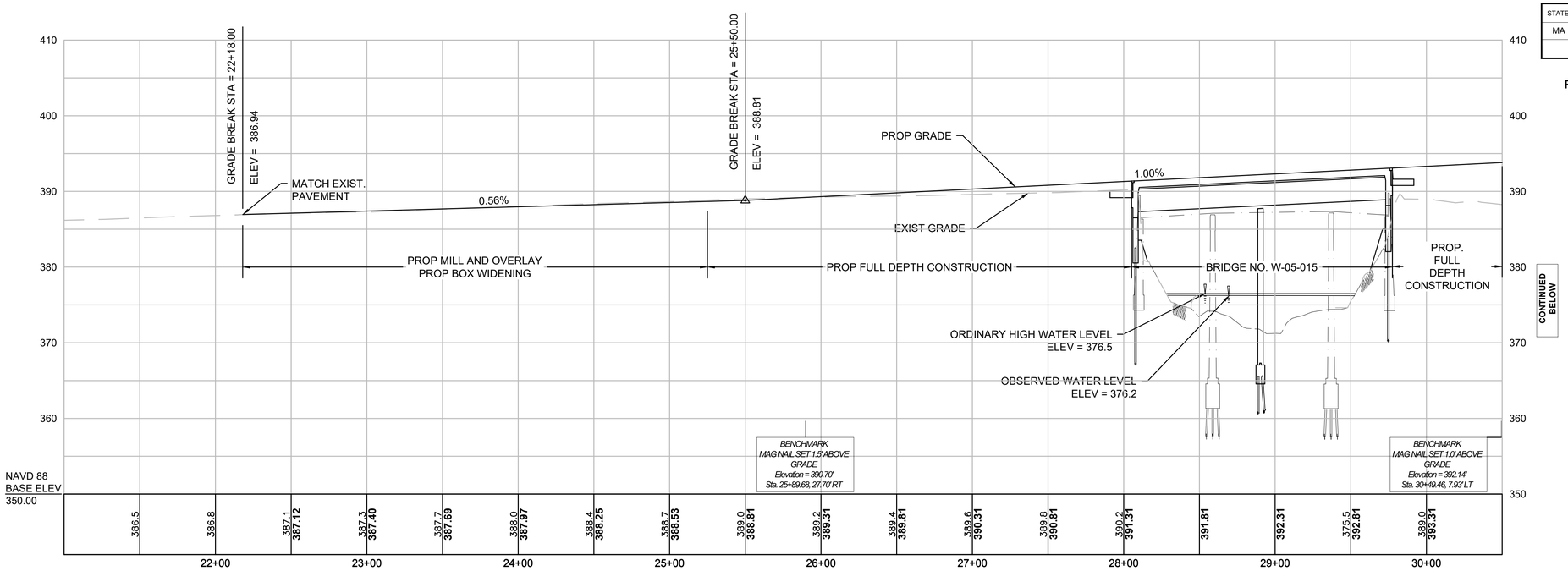

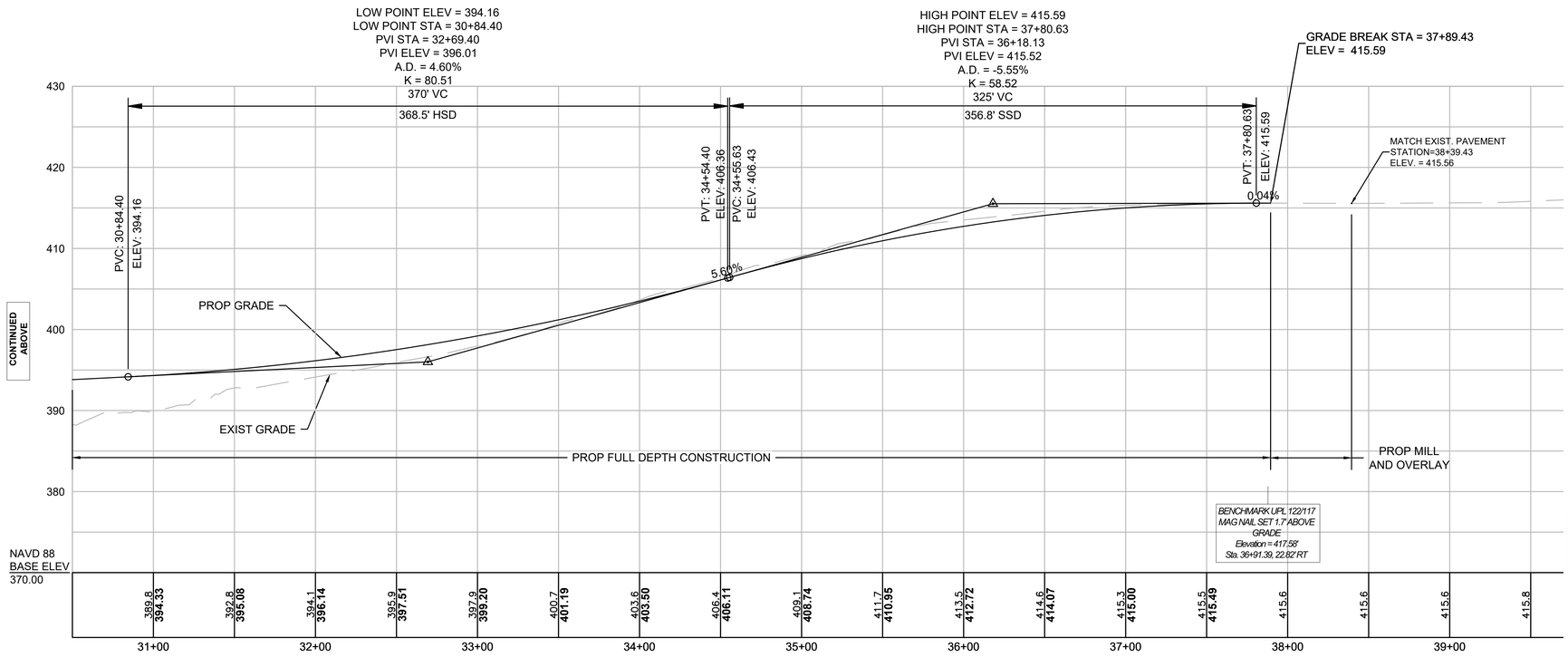

FOR PLAN SEE SHEET 14-17

HOR. SCALE IN FEET
40 0 40 80
8 0 8 16
VER. SCALE IN FEET

605126_HD_PROFILE.DWG Plotted on 19-Aug-22 1:10 PM

WARE
PALMER ROAD (ROUTE 32) OVER WARE RIVER
BRIDGE NO. W-05-015

STATE	FED. AID PROJ. NO.	SHEET NO.	TOTAL SHEETS
MA	STP(BR-OFF)-003S(606)X	20	125
PROJECT FILE NO.	605126		

PROFILE
OLD BELCHERTOWN ROAD

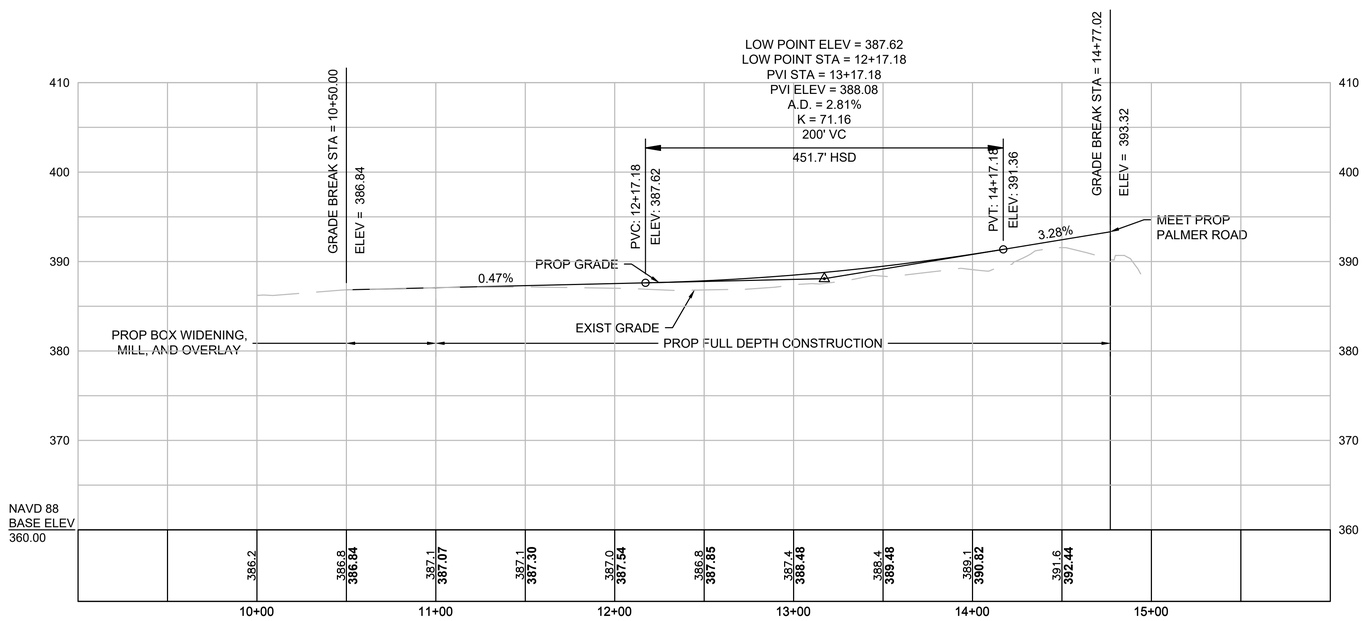

FOR PLAN SEE SHEET 18

HOR. SCALE IN FEET
40 0 40 80
8 0 8 16
VER. SCALE IN FEET

605126_HD_PROFILE.DWG Plotted on 19-Aug-22 1:10 PM

WARE
PALMER ROAD (ROUTE 32) OVER WARE RIVER
BRIDGE NO. W-05-015

STATE	FED. AID PROJ. NO.	SHEET NO.	TOTAL SHEETS
MA	STP(BR-OFF)-003S(606)X	21	125
PROJECT FILE NO.	605126		

CURB TIE & GRADING PLANS

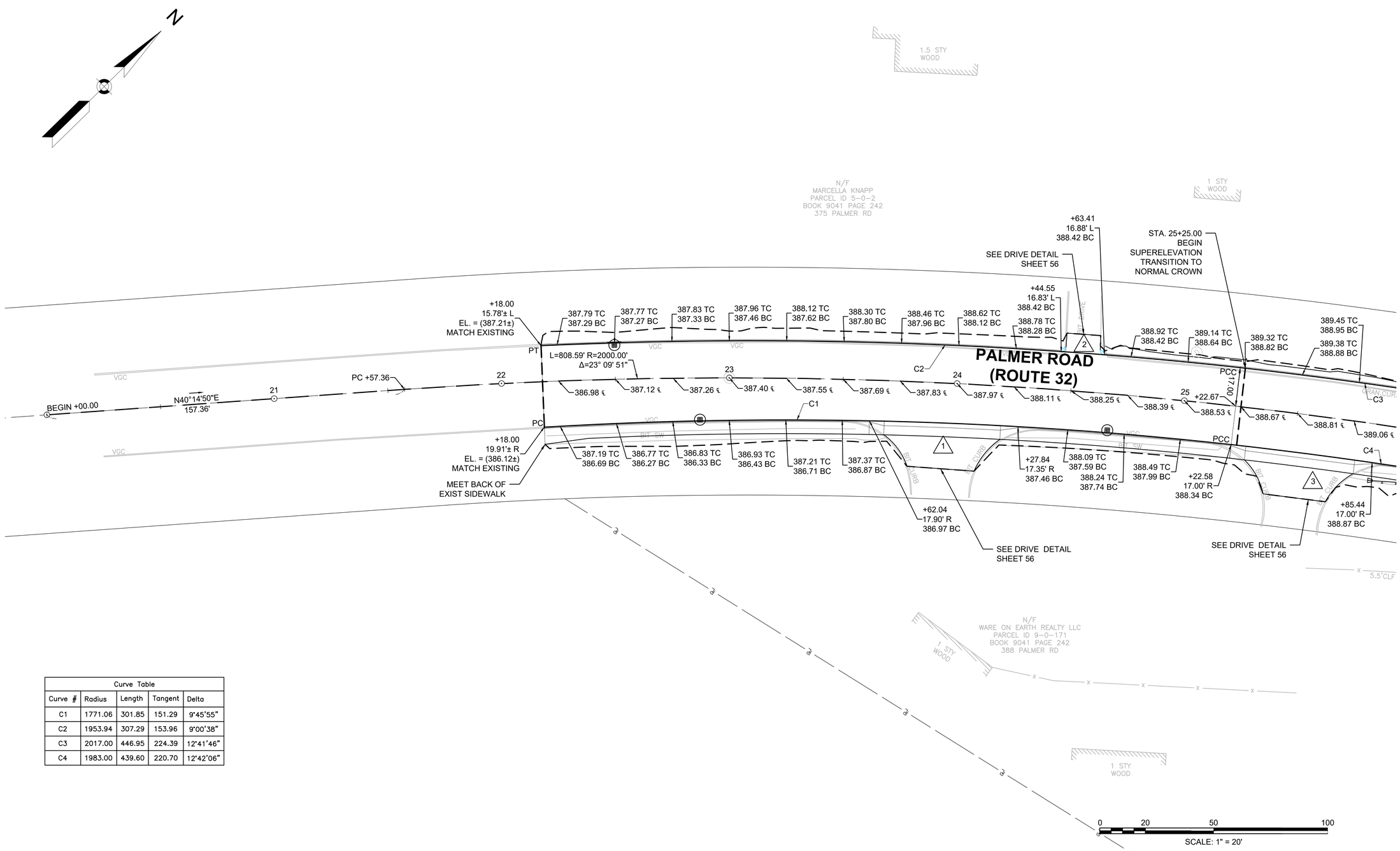

Curve Table				
Curve #	Radius	Length	Tangent	Delta
C1	1771.06	301.85	151.29	9°45'55"
C2	1953.94	307.29	153.96	9°00'38"
C3	2017.00	446.95	224.39	12°41'46"
C4	1983.00	439.60	220.70	12°42'06"

605126_HD_CURB TIE AND GRADING.DWG Plotted on 19-Aug-22 1:10 PM

WARE
PALMER ROAD (ROUTE 32) OVER WARE RIVER
BRIDGE NO. W-05-015

STATE	FED. AID PROJ. NO.	SHEET NO.	TOTAL SHEETS
MA	STP(BR-OFF)-003S(606)X	22	125
PROJECT FILE NO.	605126		

CURB TIE & GRADING PLANS

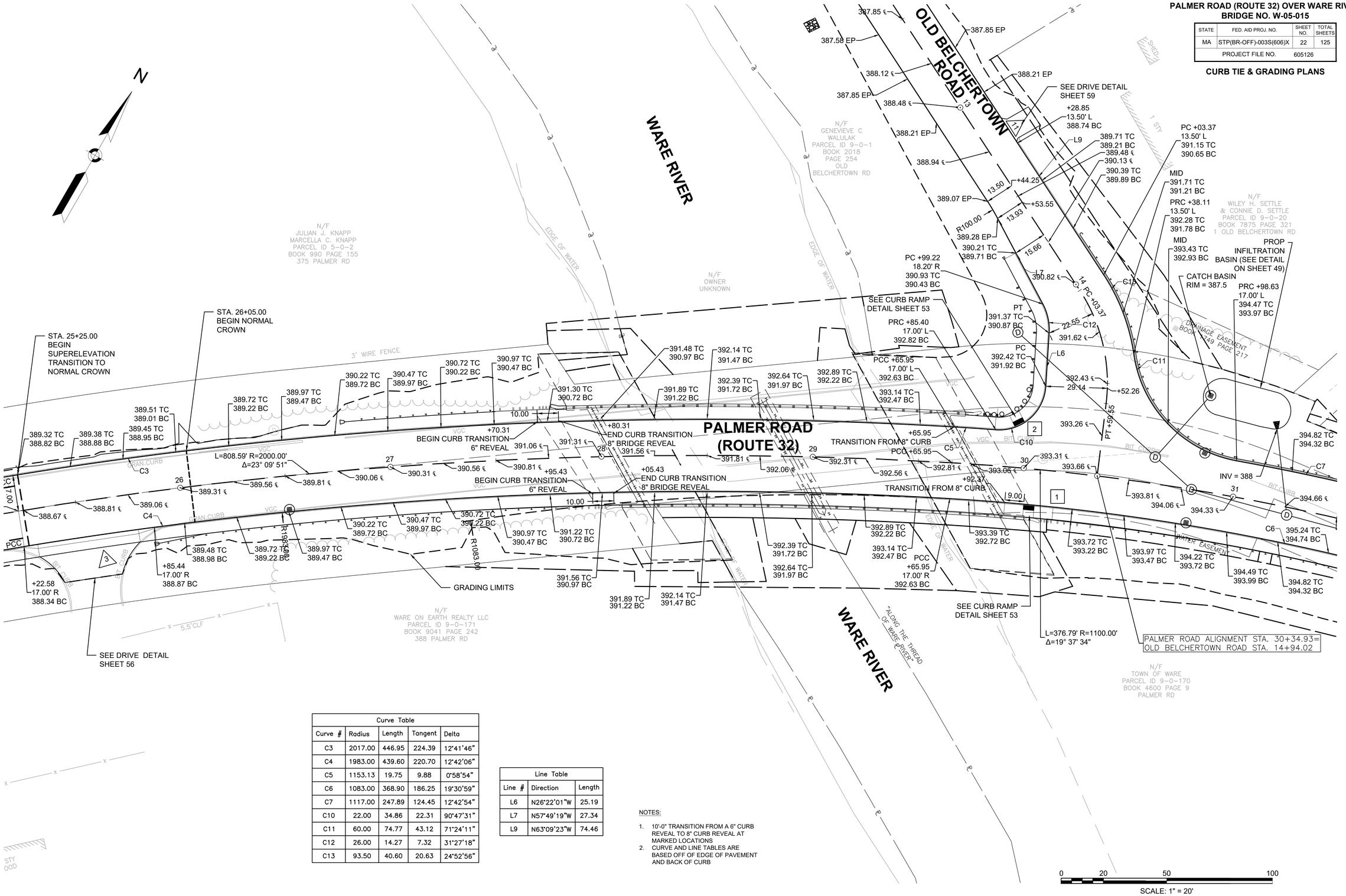

Curve Table				
Curve #	Radius	Length	Tangent	Delta
C3	2017.00	446.95	224.39	12°41'46"
C4	1983.00	439.60	220.70	12°42'06"
C5	1153.13	19.75	9.88	0°58'54"
C6	1083.00	368.90	186.25	19°30'59"
C7	1117.00	247.89	124.45	12°42'54"
C10	22.00	34.86	22.31	90°47'31"
C11	60.00	74.77	43.12	71°24'11"
C12	26.00	14.27	7.32	31°27'18"
C13	93.50	40.60	20.63	24°52'56"

Line Table		
Line #	Direction	Length
L6	N26°22'01"W	25.19
L7	N57°49'19"W	27.34
L9	N63°09'23"W	74.46

NOTES:

1. 10'-0" TRANSITION FROM A 6" CURB REVEAL TO 8" CURB REVEAL AT MARKED LOCATIONS
2. CURVE AND LINE TABLES ARE BASED OFF OF EDGE OF PAVEMENT AND BACK OF CURB

605126_HD_CURB TIE AND GRADING.DWG Plotted on 19-Aug-22 1:10 PM

WARE
PALMER ROAD (ROUTE 32) OVER WARE RIVER
BRIDGE NO. W-05-015

STATE	FED. AID PROJ. NO.	SHEET NO.	TOTAL SHEETS
MA	STP(BR-OFF)-003S(606)X	23	125
PROJECT FILE NO.	605126		

CURB TIE & GRADING PLANS

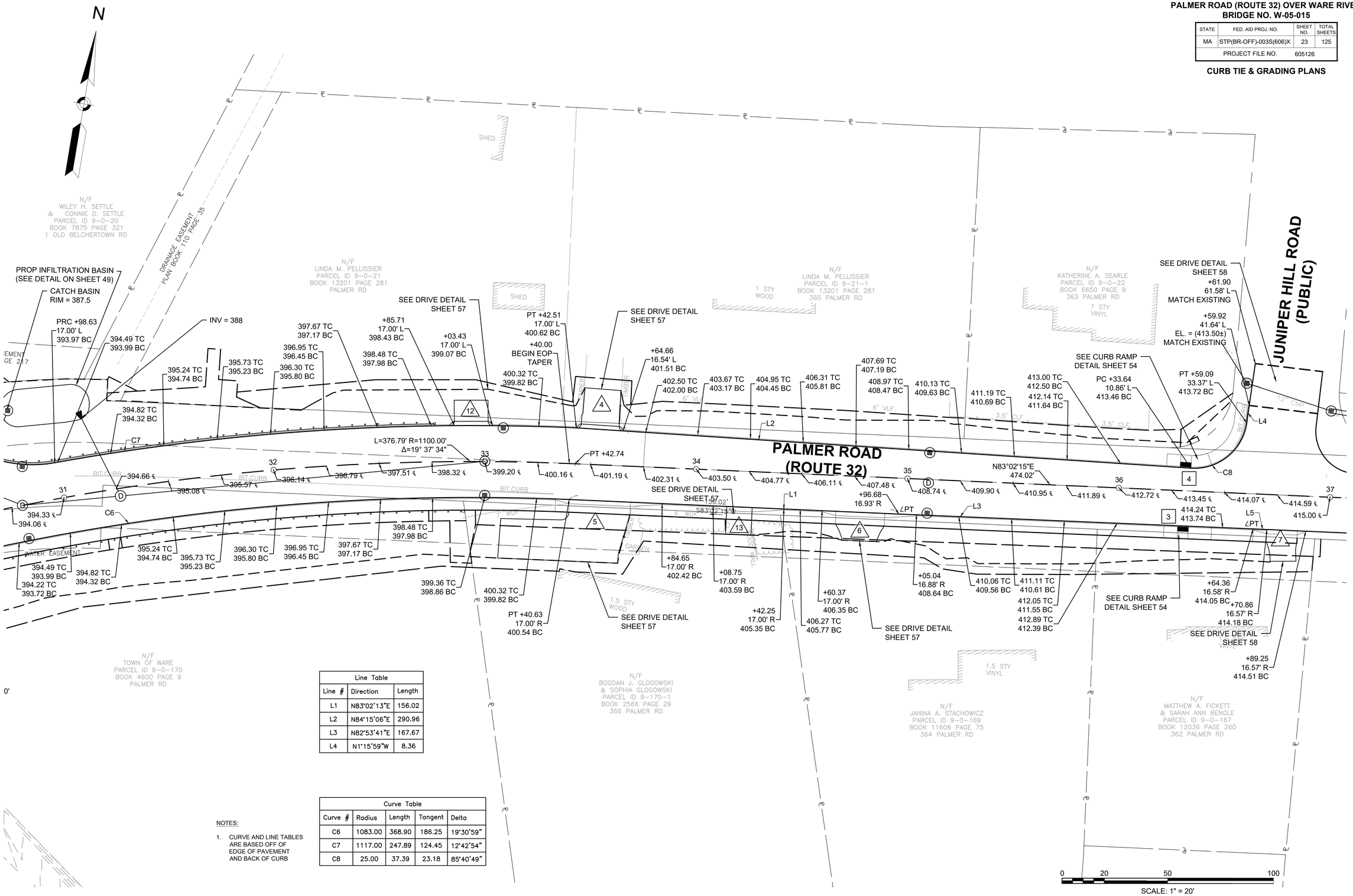

Line Table		
Line #	Direction	Length
L1	N83°02'13"E	156.02
L2	N84°15'06"E	290.96
L3	N82°53'41"E	167.67
L4	N1°15'59"W	8.36

Curve Table				
Curve #	Radius	Length	Tangent	Delta
C6	1083.00	368.90	186.25	19°30'59"
C7	1117.00	247.89	124.45	12°42'54"
C8	25.00	37.39	23.18	85°40'49"

NOTES:

1. CURVE AND LINE TABLES ARE BASED OFF OF EDGE OF PAVEMENT AND BACK OF CURB

605126_HD_CURB TIE AND GRADING.DWG Plotted on 19-Aug-22 1:10 PM

WARE
PALMER ROAD (ROUTE 32) OVER WARE RIVER
BRIDGE NO. W-05-015

STATE	FED. AID PROJ. NO.	SHEET NO.	TOTAL SHEETS
MA	STP(BR-OFF)-003S(606)X	24	125
PROJECT FILE NO.	605126		

CURB TIE & GRADING PLANS

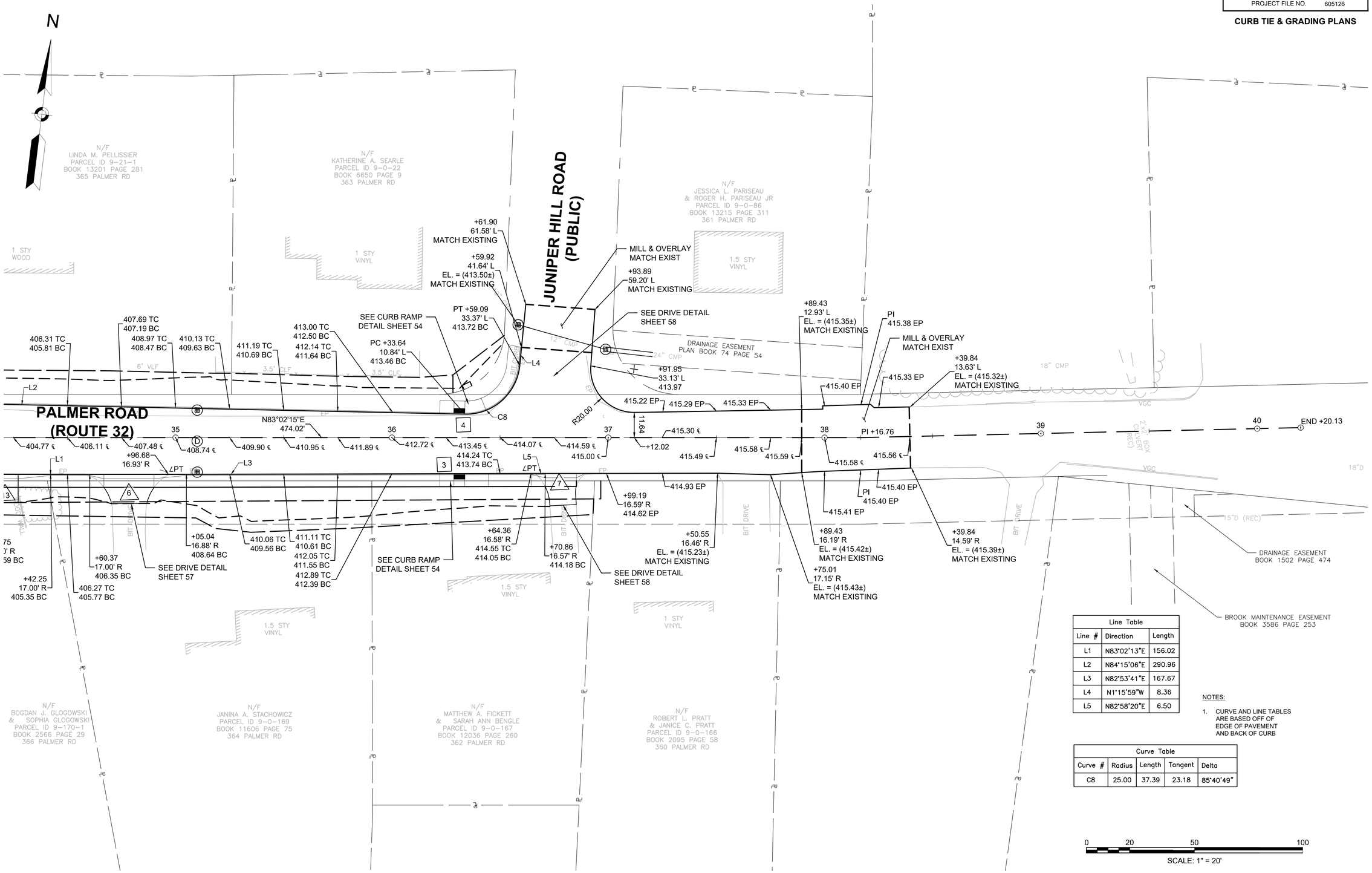

Line Table		
Line #	Direction	Length
L1	N83°02'13"E	156.02
L2	N84°15'06"E	290.96
L3	N82°53'41"E	167.67
L4	N1°15'59"W	8.36
L5	N82°58'20"E	6.50

NOTES:

1. CURVE AND LINE TABLES ARE BASED OFF OF EDGE OF PAVEMENT AND BACK OF CURB

Curve Table				
Curve #	Radius	Length	Tangent	Delta
C8	25.00	37.39	23.18	85°40'49"

605126_HD_CURB TIE AND GRADING.DWG Plotted on 19-Aug-22 1:10 PM

WARE
PALMER ROAD (ROUTE 32) OVER WARE RIVER
BRIDGE NO. W-05-015

STATE	FED. AID PROJ. NO.	SHEET NO.	TOTAL SHEETS
MA	STP(BR-OFF)-003S(606)X	25	125
PROJECT FILE NO.	605126		

CURB TIE & GRADING PLANS

NOTES:

1. CURVE AND LINE TABLES ARE BASED OFF OF EDGE OF PAVEMENT AND BACK OF CURB

Line Table		
Line #	Direction	Length
L6	N26°22'01"W	25.19
L7	N57°49'19"W	27.34
L9	N63°09'23"W	74.46

Curve Table				
Curve #	Radius	Length	Tangent	Delta
C5	1153.13	19.75	9.88	0°58'54"
C10	22.00	34.86	22.31	90°47'31"
C11	60.00	74.77	43.12	71°24'11"
C12	26.00	14.27	7.32	31°27'18"
C13	93.50	40.60	20.63	24°52'56"

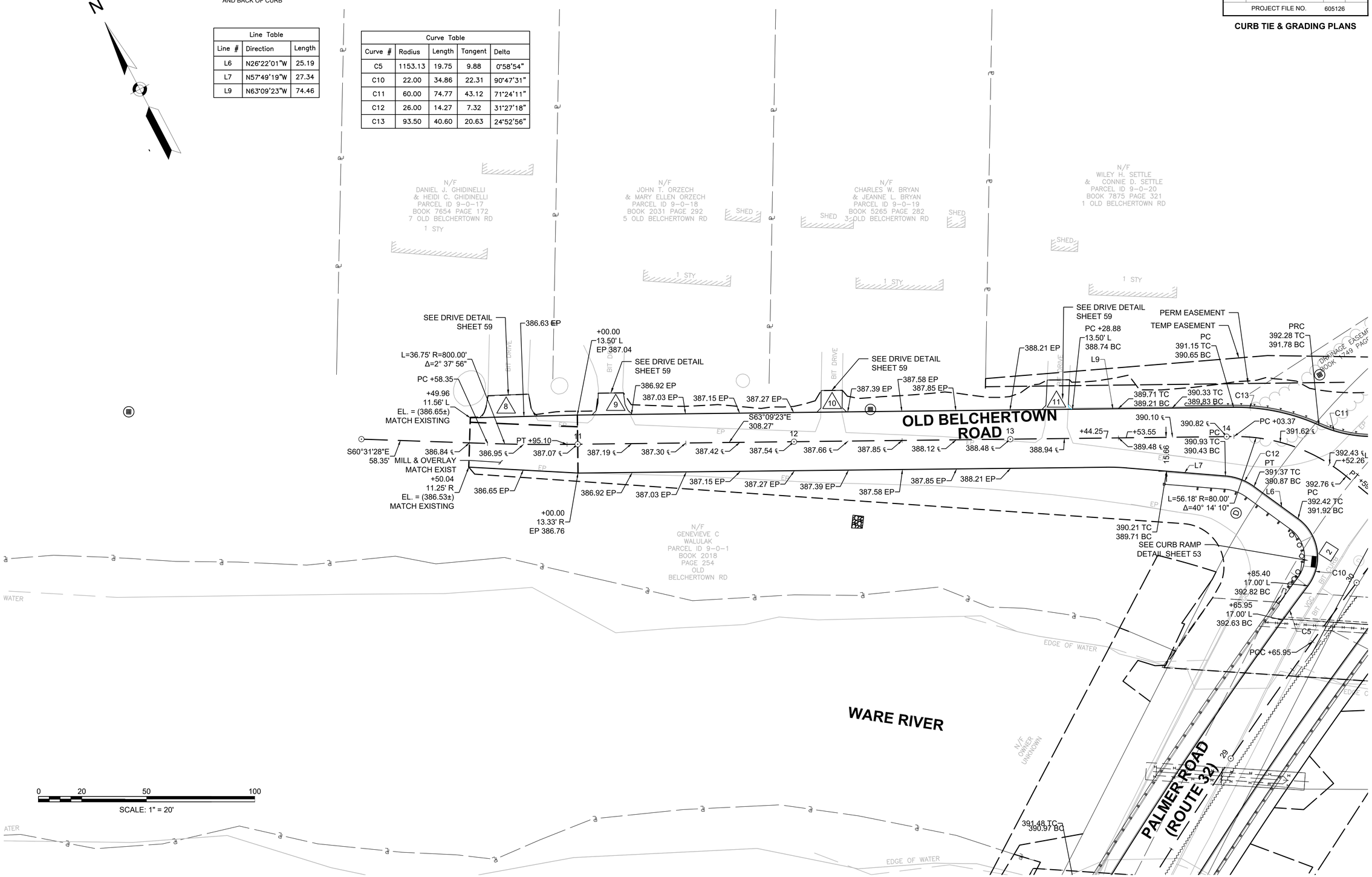

605126_HD_CURB TIE AND GRADING.DWG Plotted on 19-Aug-22 1:10 PM

WARE
PALMER ROAD/ROUTE 32 OVER WARE RIVER
BRIDGE NO. W-05-015

STATE	FED. AID PROJ. NO.	SHEET NO.	TOTAL SHEETS
MA	STP(BR-OFF)-003S(606)X	26	125
PROJECT FILE NO.	605126		

TRAFFIC SIGN & PAVEMENT MARKINGS PLAN
SHEET 1 OF 5

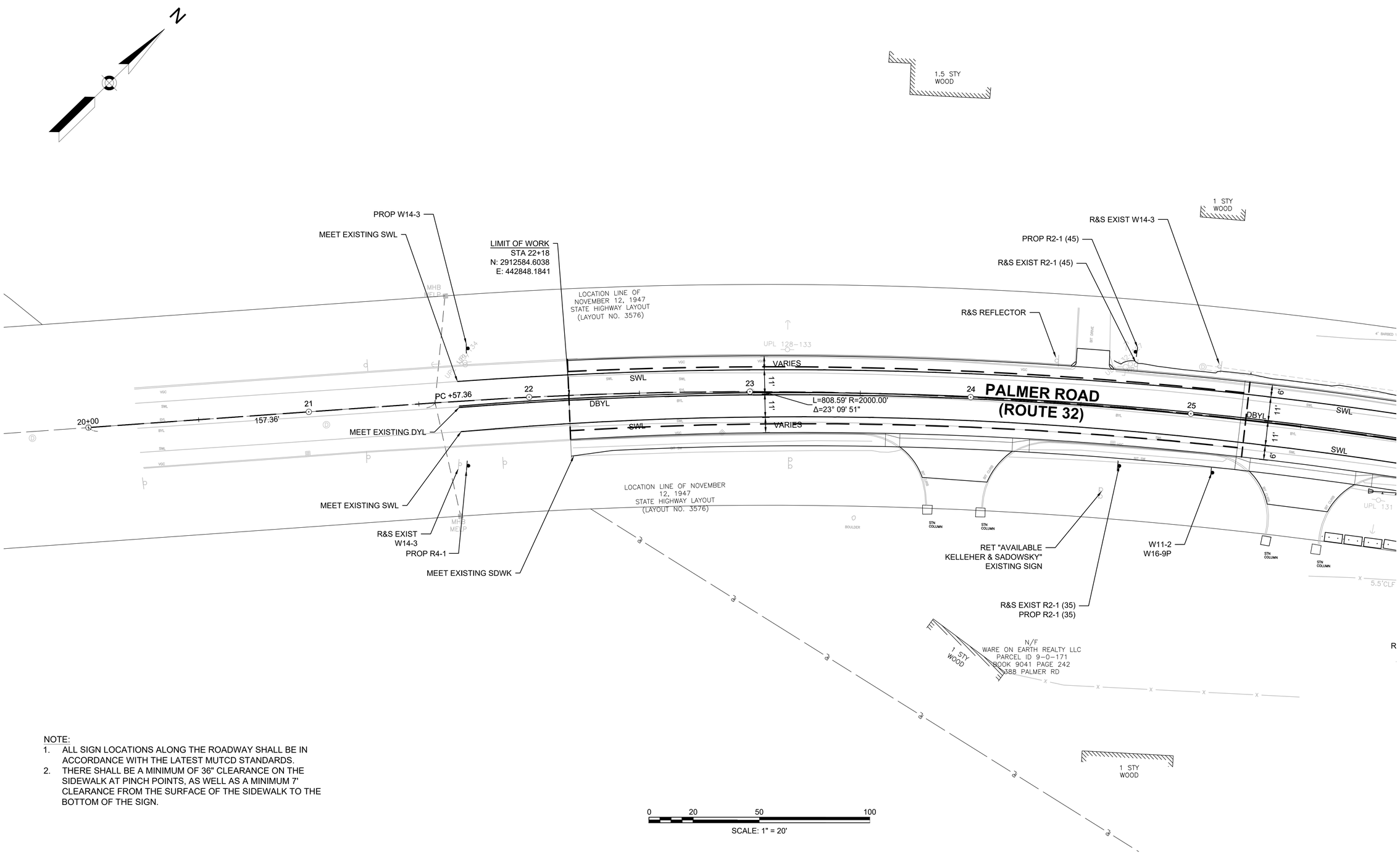

NOTE:
1. ALL SIGN LOCATIONS ALONG THE ROADWAY SHALL BE IN ACCORDANCE WITH THE LATEST MUTCD STANDARDS.
2. THERE SHALL BE A MINIMUM OF 36" CLEARANCE ON THE SIDEWALK AT PINCH POINTS, AS WELL AS A MINIMUM 7' CLEARANCE FROM THE SURFACE OF THE SIDEWALK TO THE BOTTOM OF THE SIGN.

CONTINUED ON SHEET NO. 27

605126_HD_SIGN&PM.DWG Plotted on 4-Oct-2022 2:39 PM

WARE
PALMER ROAD/ROUTE 32 OVER WARE RIVER
BRIDGE NO. W-05-015

STATE	FED. AID PROJ. NO.	SHEET NO.	TOTAL SHEETS
MA	STP(BR-OFF)-003S(606)X	27	125
PROJECT FILE NO.	605126		

TRAFFIC SIGN & PAVEMENT MARKINGS PLAN
SHEET 2 OF 5

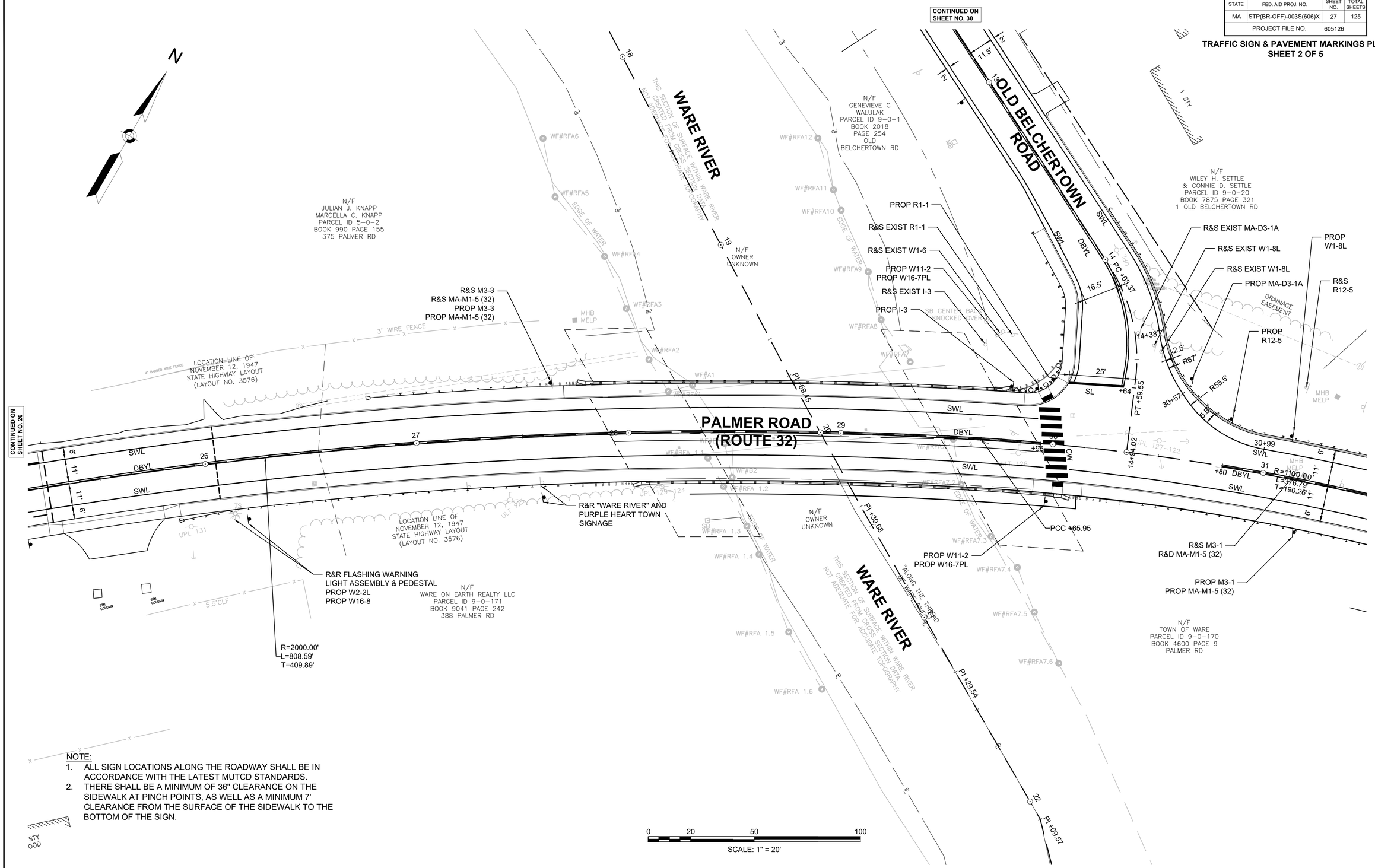

NOTE:
1. ALL SIGN LOCATIONS ALONG THE ROADWAY SHALL BE IN ACCORDANCE WITH THE LATEST MUTCD STANDARDS.
2. THERE SHALL BE A MINIMUM OF 36" CLEARANCE ON THE SIDEWALK AT PINCH POINTS, AS WELL AS A MINIMUM 7' CLEARANCE FROM THE SURFACE OF THE SIDEWALK TO THE BOTTOM OF THE SIGN.

605126_HD_SIGN&PM.DWG Plotted on 4-Oct-2022 2:39 PM

WARE
PALMER ROAD/ROUTE 32 OVER WARE RIVER
BRIDGE NO. W-05-015

STATE	FED. AID PROJ. NO.	SHEET NO.	TOTAL SHEETS
MA	STP(BR-OFF)-003S(606)X	28	125
PROJECT FILE NO.	605126		

TRAFFIC SIGN & PAVEMENT MARKINGS PLAN
SHEET 3 OF 5

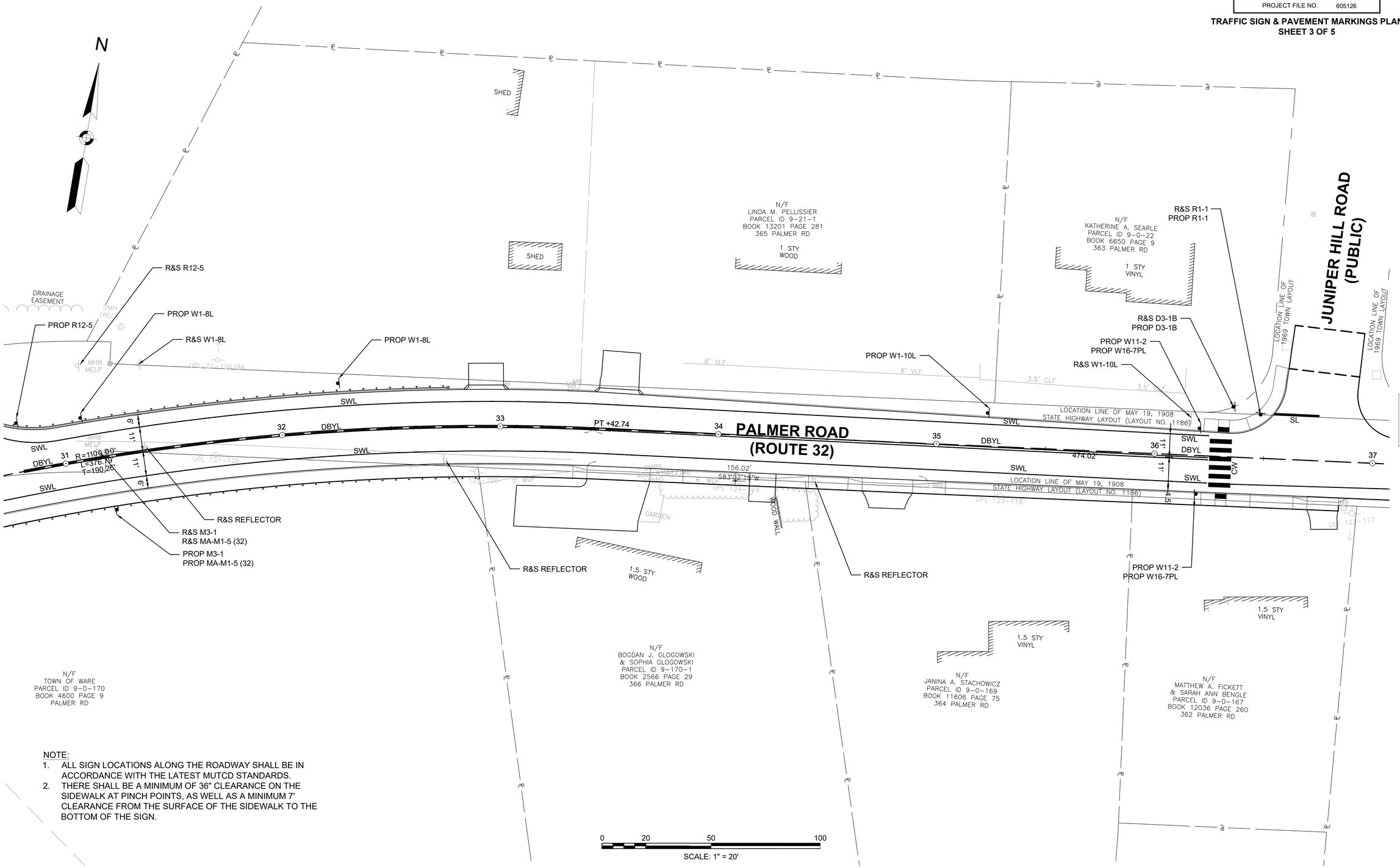

NOTE:
1. ALL SIGN LOCATIONS ALONG THE ROADWAY SHALL BE IN ACCORDANCE WITH THE LATEST MUTCD STANDARDS.
2. THERE SHALL BE A MINIMUM OF 36" CLEARANCE ON THE SIDEWALK AT PINCH POINTS, AS WELL AS A MINIMUM 7' CLEARANCE FROM THE SURFACE OF THE SIDEWALK TO THE BOTTOM OF THE SIGN.

605126_HD_SIGN&PM.DWG Plotted on 4-Oct-2022 2:39 PM

WARE
PALMER ROAD/ROUTE 32 OVER WARE RIVER
BRIDGE NO. W-05-015

STATE	FED. AID PROJ. NO.	SHEET NO.	TOTAL SHEETS
MA	STP(BR-OFF)-003S(606)X	29	125
PROJECT FILE NO.	605126		

TRAFFIC SIGN & PAVEMENT MARKINGS PLAN
SHEET 4 OF 5

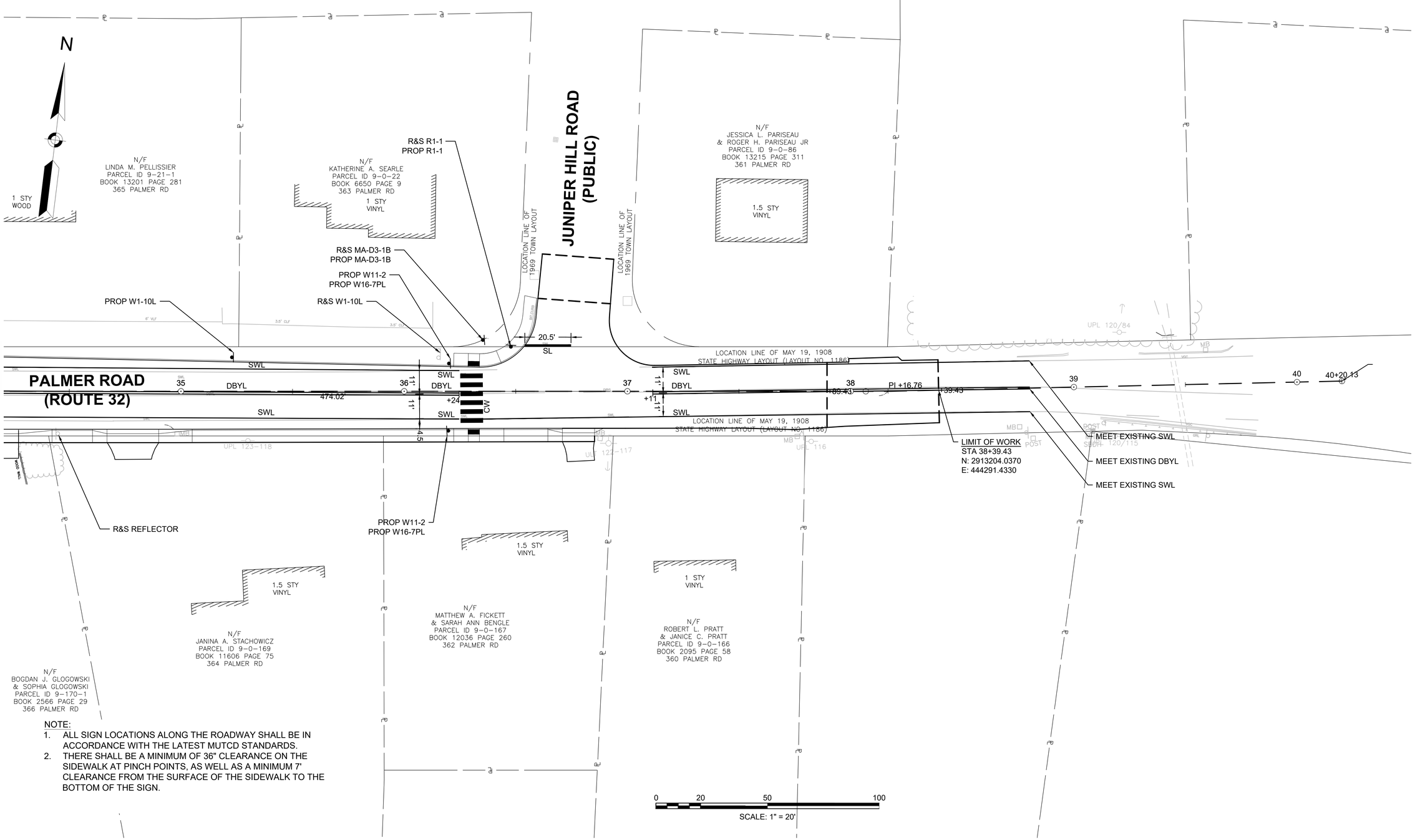

NOTE:
1. ALL SIGN LOCATIONS ALONG THE ROADWAY SHALL BE IN ACCORDANCE WITH THE LATEST MUTCD STANDARDS.
2. THERE SHALL BE A MINIMUM OF 36" CLEARANCE ON THE SIDEWALK AT PINCH POINTS, AS WELL AS A MINIMUM 7' CLEARANCE FROM THE SURFACE OF THE SIDEWALK TO THE BOTTOM OF THE SIGN.

605126_HD_SIGN&PM.DWG Plotted on 4-Oct-2022 2:39 PM

WARE
PALMER ROAD/ROUTE 32 OVER WARE RIVER
BRIDGE NO. W-05-015

STATE	FED. AID PROJ. NO.	SHEET NO.	TOTAL SHEETS
MA	STP(BR-OFF)-003S(606)X	30	125
PROJECT FILE NO.	605126		

TRAFFIC SIGN & PAVEMENT MARKINGS PLAN
SHEET 5 OF 5

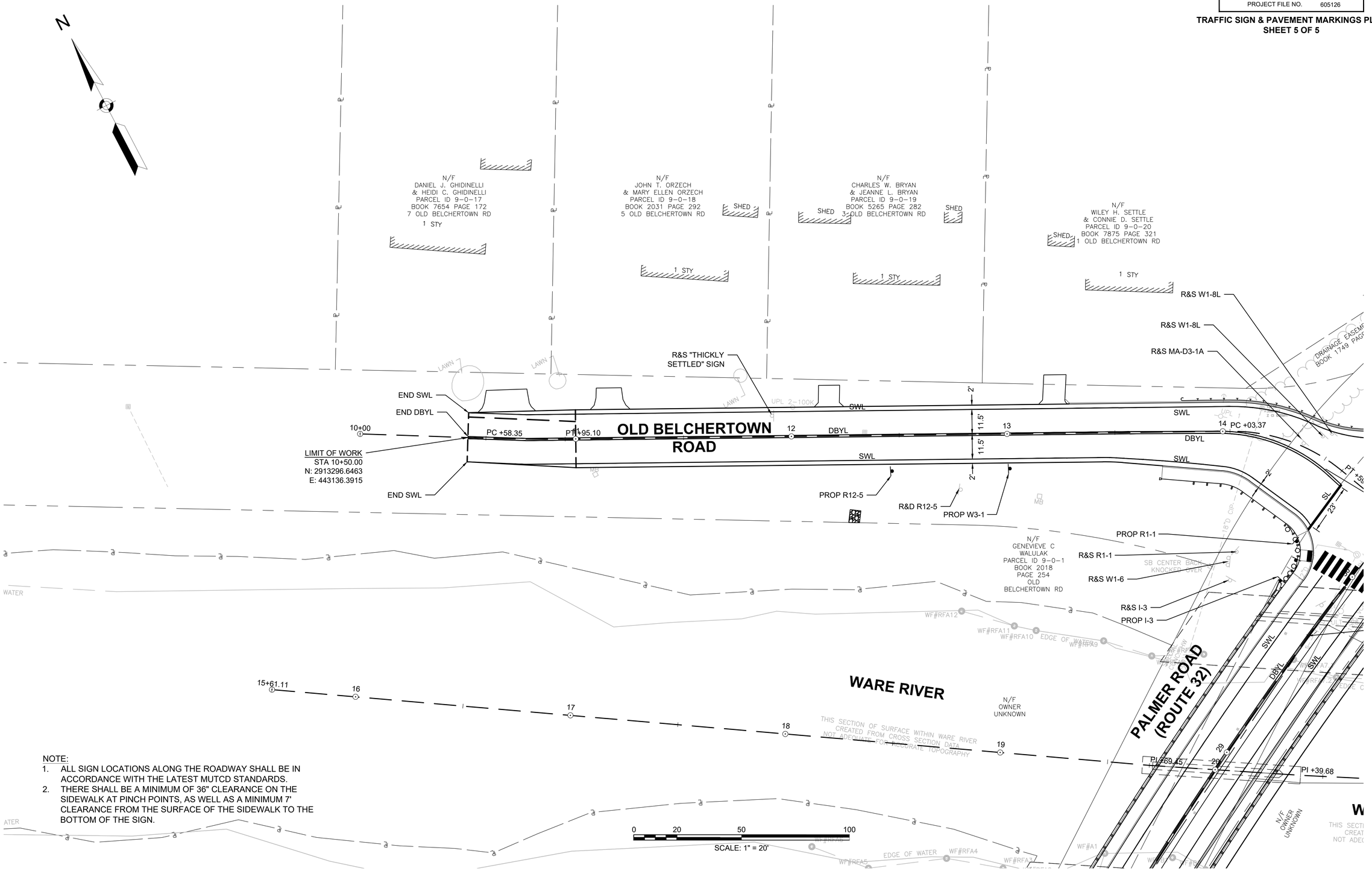

NOTE:
1. ALL SIGN LOCATIONS ALONG THE ROADWAY SHALL BE IN ACCORDANCE WITH THE LATEST MUTCD STANDARDS.
2. THERE SHALL BE A MINIMUM OF 36" CLEARANCE ON THE SIDEWALK AT PINCH POINTS, AS WELL AS A MINIMUM 7' CLEARANCE FROM THE SURFACE OF THE SIDEWALK TO THE BOTTOM OF THE SIGN.

605126_HD_SIGN&PM.DWG Plotted on 4-Oct-2022 2:39 PM

TRAFFIC SIGN SUMMARY

IDENTIFICATION NUMBER	SIZE OF SIGN (IN)		TEXT	TEXT DIMENSIONS (IN)			NUMBER OF SIGNS REQUIRED	COLOR			POST SIZE AND NUMBER REQUIRED	UNIT AREA (SF)	AREA (SF)
	WIDTH	HEIGHT		LETTER HEIGHT	VERTICAL SPACING	ARROW RTE MKR		BACKGROUND	LEGEND	BORDER			
MA-D3-1A	48	12	OLD BELCHERTOWN RD	6D	3		1	GREEN	WHITE	WHITE	P5-1 2-REQ	4.00	4.00
MA-D3-1B	36	12	JUNIPER HILL RD	6D	3		1	GREEN	WHITE	WHITE	P5-1 1-REQ	3.00	3.00
I-3	24	18	WARE RIVER	4C	4.5		1	GREEN	WHITE	WHITE	P5-1 1-REQ	3.00	3.00
MA-M1-5 (32)	30	24	32	12D	6		2	WHITE	BLACK	BLACK	P5-1 2-REQ	5.00	10.00
M3-1	24	12	NORTH	SEE 2009 MUTCD			1	WHITE	BLACK	BLACK	MOUNT WITH M1-5 (32)	2.00	2.00
M3-3	24	12	SOUTH				1	WHITE	BLACK	BLACK	MOUNT WITH M1-5 (32)	2.00	2.00
R1-1	36	36	STOP				2	RED	WHITE	WHITE	P5-1 2-REQ	9.00	18.00
R2-1 (35)	30	36	SPEED LIMIT 35				1	WHITE	BLACK	BLACK	P5-1 1-REQ	7.50	7.50
R2-1 (45)	30	36	SPEED LIMIT 45				1	WHITE	BLACK	BLACK	P5-1 1-REQ	7.50	7.50
R12-5	24	36	WEIGHT LIMIT 8T 12T 16T				2	WHITE	BLACK	BLACK	P5-1 2-REQ	6.00	12.00
W16-8p	48	18	OLD BELCHERTOWN RD				1	YELLOW	BLACK	BLACK	MOUNT ON FLASH LIGHT PEDESTAL	6.00	6.00
W1-8L	18	24					3	YELLOW	BLACK	BLACK	P5-1 3-REQ	3.00	9.00
W1-10L	36	36					1	YELLOW	BLACK	BLACK	P5-1 1-REQ	9.00	9.00
W2-2L	30	30					1	YELLOW	BLACK	BLACK	MOUNT ON FLASH LIGHT PEDESTAL	6.25	6.25
W3-1	36	36					1	YELLOW	BLACK	BLACK	P5-1 1-REQ	9.00	9.00
W11-2	36	36					5	YELLOW	BLACK	BLACK	P5-1 5-REQ	9.00	45.00
W14-3	48	36	NO PASSING ZONE				1	YELLOW	BLACK	BLACK	P5-1 1-REQ	12.00	12.00
W16-7PL	12	24					4	YELLOW	BLACK	BLACK	MOUNT WITH W11-2 (4)	2.00	8.00
W16-9P	12	24	AHEAD				1	YELLOW	BLACK	BLACK	MOUNT WITH W11-2 (1)	2.00	2.00
												TOTAL:	172.25 SF

WARE
PALMER ROAD/ROUTE 32 OVER WARE RIVER
BRIDGE NO. W-05-015

STATE	FED. AID PROJ. NO.	SHEET NO.	TOTAL SHEETS
MA	STP(BR-OFF)-003S(606)X	31	125
PROJECT FILE NO.	605126		

TRAFFIC SIGN SUMMARY
SHEET 1 OF 1

605126_HD_SIGN SUMMARY.DWG Plotted on 4-Oct-2022 2:47 PM

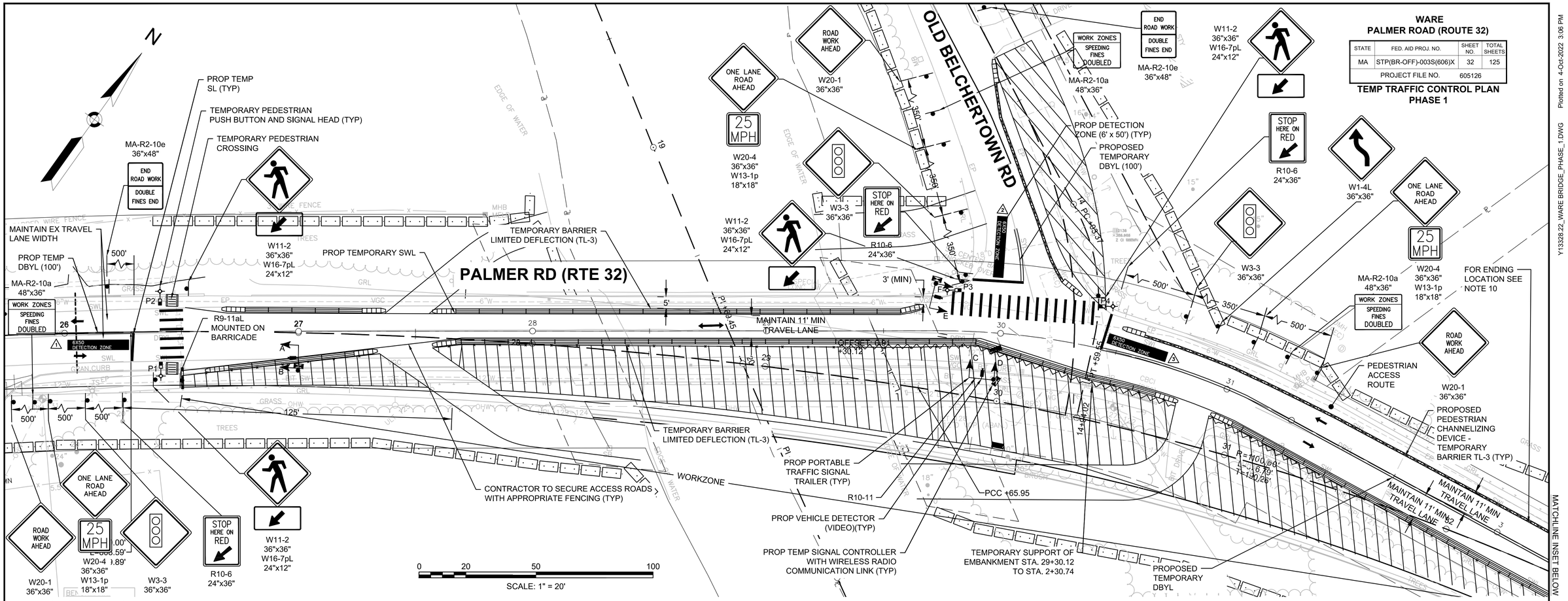

WARE
PALMER ROAD (ROUTE 32)

STATE	FED. AID PROJ. NO.	SHEET NO.	TOTAL SHEETS
MA	STP(BR-OFF)-003S(606)X	32	125
PROJECT FILE NO.	605126		

TEMP TRAFFIC CONTROL PLAN
PHASE 1

Y13328.22_WARE BRIDGE_PHASE_1.DWG Plotted on 4-Oct-2022 3:06 PM

PHASE 1 CONSTRUCTION ACTIVITY:

1. PARTIALLY CONSTRUCT APPROACH ROADWAYS ALONG REVISED ALIGNMENTS FOR PALMER ROAD AND OLD BELCHERTOWN ROAD. NEWLY FILLED AREAS MAY REQUIRE TEMPORARY SUPPORT OF EMBANKMENT DUE TO GRADE DIFFERENTIAL.
2. CONSTRUCT THE SOUTHERN SIDE OF THE BRIDGE.
3. PROVIDE SINGLE ALTERNATING TRAVEL LANE ON NORTHERN SIDE OF EXISTING BRIDGE DECK.
4. PRELIMINARY WORK DONE PRIOR TO PHASE 1 TRAFFIC CONTROL SETUP WILL BE PERFORMED USING TYPICAL TRAFFIC MANAGEMENT DETAILS.

TTCP NOTES:

1. ALL TRAFFIC CONTROL DEVICES AND WORK ZONE SET-UPS ARE TO BE IN ACCORDANCE WITH THE MOST RECENT MASSDOT AND MUTCD STANDARDS.
2. CERTAIN SURFACE ROAD FEATURES ARE NOT SHOWN FOR DRAWING CLARITY.
3. ALL SIGNS AND TEMPORARY TRAFFIC SIGNALS SHALL BE MOUNTED ON SUITABLE TEMPORARY SUPPORTS SUCH THAT SIGNS/SIGNALS ARE CLEARLY VISIBLE TO APPROACHING TRAFFIC.
4. CONTRACTOR TO REMOVE ALL PAVEMENT MARKINGS IN CONFLICT WITH THE PROPOSED WORK ZONE SET-UP, INCLUDING EXISTING DOUBLE YELLOW CENTERLINES, BEFORE COMMENCEMENT OF WORK.
5. SEE SHEET 43 FOR CONSTRUCTION SIGN SUMMARY.
6. REFLECTORIZED DELINEATORS SHALL BE MOUNTED ALONG ENTIRE LENGTH OF TEMPORARY CONSTRUCTION BARRIER.
7. THREE (3) FLASHING WARNING BEACONS FACING ONCOMING TRAFFIC SHALL BE MOUNTED ON ALL TEMPORARY CONSTRUCTION BARRIER TAPERS AT 10 FT ON CENTER, STARTING AT THE BEGINNING OF THE TAPER WITHIN THE TRAVEL WAY.
8. ALL TEMPORARY FACILITIES, INCLUDING BUT NOT LIMITED TO, TEMPORARY PEDESTRIAN PASSAGEWAYS AROUND A CONSTRUCTION SITE, SHALL COMPLY WITH 521 CMR, WHICH STATES, "NO ALTERATION SHALL BE UNDERTAKEN WHICH DECREASES OR HAS THE EFFECT OF DECREASING ACCESSIBILITY OR USABILITY OF A FACILITY BELOW THE REQUIREMENTS FOR NEW CONSTRUCTION."
9. ADA-COMPLIANT ACCESS SHALL BE MAINTAINED AT ALL TIMES, INCLUDING PEDESTRIAN GUIDANCE SYSTEMS AT WORK ZONES. PEDESTRIAN DETOURS AND BYPASS ROUTES SHALL INCLUDE ADA-COMPLIANT ROUTES WITH PROPER BARRICADES, RAILINGS, RAMPS, DETECTABLE WARNING PANELS, AND SIGNAGE.
10. PEDESTRIAN CHANNELIZING DEVICES SHALL END AT STA. 4+22.
11. THESE TRAFFIC CONTROL PLANS PRESENT A GENERAL SUGGESTED VIABLE MEANS OF PHASING THE CONSTRUCTION WHILE MAINTAINING AND CONTROLLING SAFE TRAFFIC OPERATIONS, AND ARE NOT INTENDED TO COVER ALL POTENTIAL SUB-PHASES AND INDIVIDUAL CONSTRUCTION ACTIVITIES AND OPERATIONS THAT THE CONTRACTOR MAY NEED OR CHOOSE TO UNDERTAKE OR EMPLOY. THE CONTRACTOR IS NOT BOUND BY OR RESTRICTED TO THE SPECIFIC PHASING PRESENTED SHOULD IT NOT SUPPORT HIS/HER PLANNED APPROACH TO CONSTRUCTION ACTIVITIES, AND SHALL SUBMIT CONSTRUCTION PHASING/TRAFFIC MANAGEMENT APPROACH AND PLANS IN CONFORMANCE WITH LATEST EDITION OF MUTCD FOR APPROVAL BY THE ENGINEER.

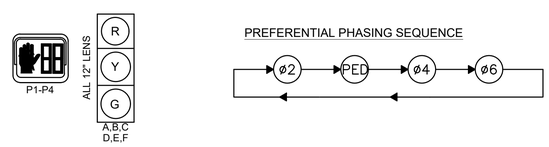

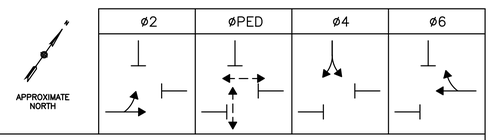

TEMPORARY TRAFFIC SIGNAL SEQUENCE AND TIMING FOR FULL ACTUATED CONTROL (ISOLATED)

STREET	DIRECTION	HOUSINGS	1	2	3	4	5	6	7	8	9	10	11	12
PALMER RD	NB	A,B	G	Y	R	R	R	R	R	R	R	R	R	R
OLD BELCHERTOWN RD	EB	C,D	R	R	R	R	R	R	G	Y	R	R	R	R
PALMER RD	SB	E,F	R	R	R	R	R	R	R	R	R	G	Y	R
PEDESTRIAN	NB/SB	P1–P2	DW	DW	DW	W	FDW	DW	DW	DW	DW	DW	DW	DW
PEDESTRIAN	EB/WB	P3–P4	DW	DW	DW	W	FDW	DW	DW	DW	DW	DW	DW	DW
TIMING IN SECONDS														
MINIMUM GREEN (INITIAL)			10						6			10		
PASSAGE TIME (VEHICLE)			3						3			3		
MAXIMUM 1 (3:00AM – 3:00PM)			19						6			29		
MAXIMUM 2 (3:00PM – 3:00AM)			36						8			35		
YELLOW CLEARANCE				3.5						3			3.5	
RED CLEARANCE					14						3			14
WALK (W)						7								
PEDESTRIAN CLEARANCE							16	4						
RECALL			MIN			NONE			NONE			MIN		
MEMORY			NON–LOCK			LOCK			NON–LOCK			NON–LOCK		

SEQUENCE AND TIMING NOTES:

1. ALL TIMINGS ARE IN SECONDS.
2. ALL TRAFFIC CONTROL DEVICES ARE TO BE IN ACCORDANCE WITH THE MOST RECENT MASSDOT AND MUTCD STANDARDS.
3. PROPOSED TEMPORARY SIGNAL EQUIPMENT SHALL CONFORM TO THE LATEST MASSDOT APPROVED EQUIPMENT LIST.
4. ALL SIGNALS SHALL DISPLAY STEADY "R" IN THE EVENT OF A SIGNAL MALFUNCTION. THE POLICE SHALL BE NOTIFIED IMMEDIATELY.
5. SIGNAL TIMING SHALL BE RE-EVALUATED BY A LICENSED PROFESSIONAL ENGINEER AFTER ONE WEEK OF OPERATION (OR AS DIRECTED BY THE RESIDENT ENGINEER) AND ADJUSTED AS NEEDED.
6. PORTABLE TRAFFIC SIGNAL TRAILERS TO COMMUNICATE WITH EACH OTHER VIA WIRELESS RADIO COMMUNICATION LINKS.
7. PHASE 4 SHALL ALWAYS BE FOLLOWED BY PHASE 6.

DETECTOR DATA

DETECTOR NO.	SIZE	OPERATIONS	DELAY/EXT (SEC)	CALL PHASE
1	6' x 50' ZONE	PRESENCE	0/0	ø2
2	6' x 50' ZONE	PRESENCE	0/0	ø4
3	6' x 50' ZONE	PRESENCE	0/0	ø6

MAJOR ITEMS REQUIRED

PAY ITEM	QUANTITY	ITEM
816.81	3	PORTABLE TRAFFIC SIGNAL TRAILER, INCLUDING:
		(1) TRAFFIC SIGNAL CONTROLLER
		(2) 12" LED SIGNAL HEAD, 3–SECTION
		(1) VIDEO TRAFFIC DETECTION SYSTEM
		(1) SERVICE CONNECTION (SOLAR)
		(1) ADJUSTABLE MAST ARM
		(1) WIRELESS RADIO COMMUNICATION LINK
	4	TEMPORARY PEDESTRIAN SIGNAL WITH POST AND BASE
	4	PEDESTRIAN PUSH BUTTON

Plus all necessary duct, cable, labor, miscellaneous material and equipment to complete the installation.

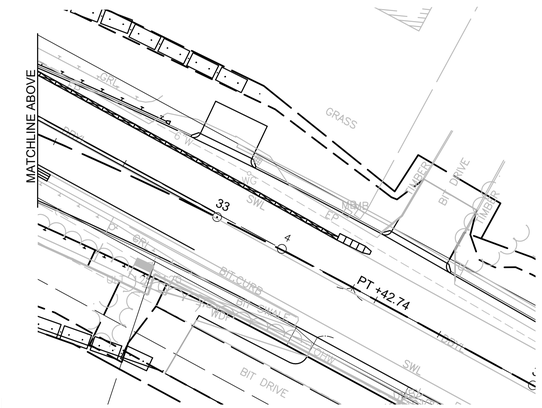

LEGEND:

- DRUM OR CONE
- SIGN
- WORK ZONE
- TRAFFIC FLOW
- TEMPORARY BARRIER LIMITED DEFLECTION TL-3
- TEMPORARY TRAFFIC SIGNAL
- TEMPORARY MAST ARM
- PEDESTRIAN CHANNELIZING DEVICE-TEMPORARY BARRIER TL-3
- IMPACT ATTENUATOR
- TEMPORARY SUPPORT OF EMBANKMENT

WARE
PALMER ROAD (ROUTE 32)

STATE	FED. AID PROJ. NO.	SHEET NO.	TOTAL SHEETS
MA	STP(BR-OFF)-003S(606)X	33	125
PROJECT FILE NO.	605126		

TEMP TRAFFIC CONTROL PLAN
PHASE 1A

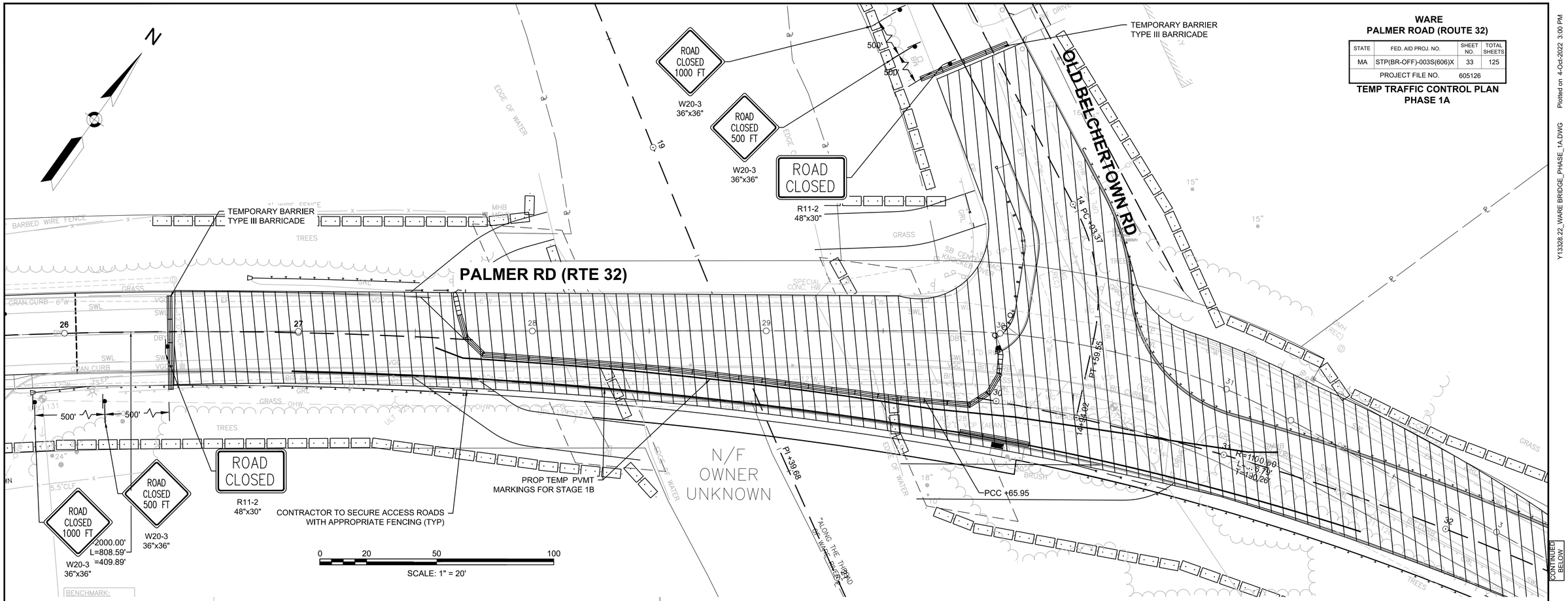

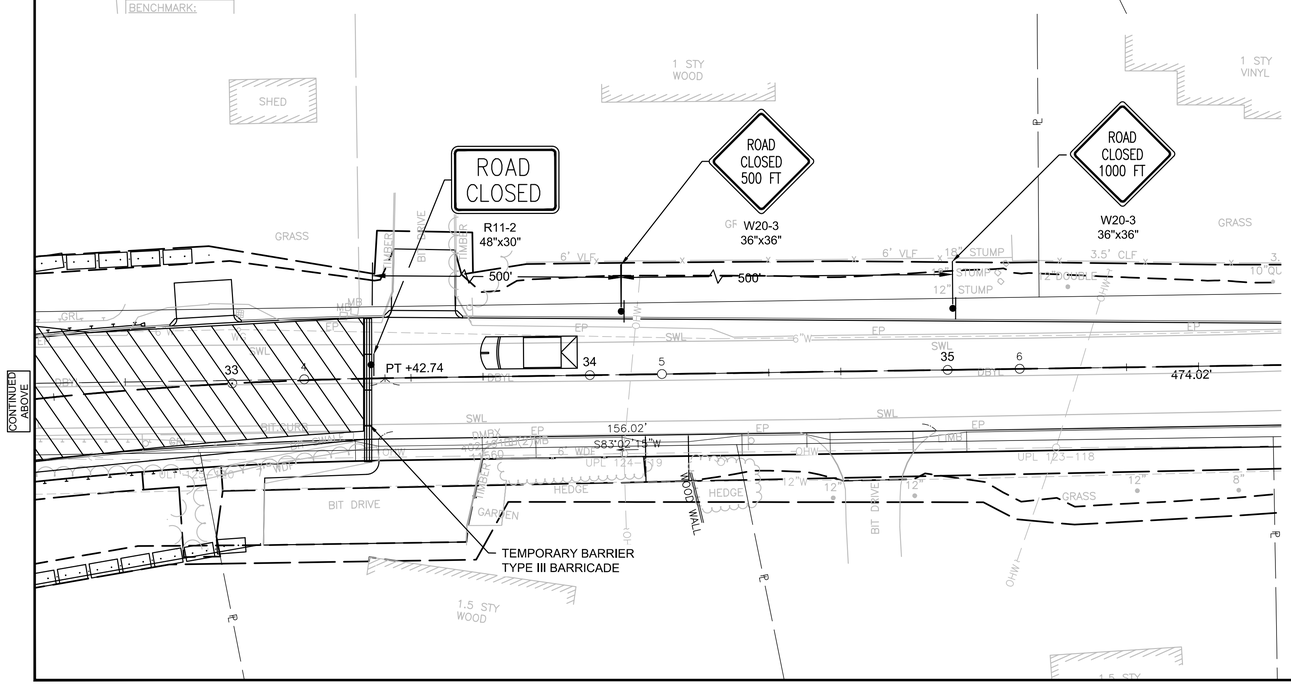

PHASE 1A CONSTRUCTION ACTIVITY:

1. USE SHORT -DURATION, ONE WEEK, FULL CLOSURE OF PALMER RD AND OLD BELCHERTOWN RD.
2. COMPLETE CONSTRUCTION OF APPROACH ROADWAYS ALONG REVISED ALIGNMENTS FOR PALMER RD.
3. CONNECT UNDERGROUND UTILITIES FROM PALMER RD AND OLD BELCHERTOWN RD.
4. PALMER RD AND OLD BELCHERTOWN RD TRAFFIC TO BE DETOURED USING STAGE 1
5. PHASE 1A IS PROPOSED TO ALLOW TIE-INS OF WATER AND DRAINAGE LINES ACCROSS PALMER ROAD TO OLD BELCHERTOWN ROAD (TO BE FINISHED IN PHASE 1B) AND TO COMPETE LATERAL ROADWAY GRADING ON THE PALMER ROAD APPROACHES TO THE BRIDGE TO ALLOW TWO-WAY TRAFFIC TO REOPEN DURING PHASE 1B.

TTCP NOTES:

1. ALL TRAFFIC CONTROL DEVICES AND WORK ZONE SET-UPS ARE TO BE IN ACCORDANCE WITH THE MOST RECENT MASSDOT AND MUTCD STANDARDS.
2. CERTAIN SURFACE ROAD FEATURES ARE NOT SHOWN FOR DRAWING CLARITY.
3. ALL SIGNS AND TEMPORARY TRAFFIC SIGNALS SHALL BE MOUNTED ON SUITABLE TEMPORARY SUPPORTS SUCH THAT SIGNS/SIGNALS ARE CLEARLY VISIBLE TO APPROACHING TRAFFIC.
4. CONTRACTOR TO REMOVE ALL PAVEMENT MARKINGS IN CONFLICT WITH THE PROPOSED WORK ZONE SET-UP, INCLUDING EXISTING DOUBLE YELLOW CENTERLINES, BEFORE COMMENCEMENT OF WORK.
5. SEE SHEET 43 FOR CONSTRUCTION SIGN SUMMARY.
6. REFLECTORIZED DELINEATORS SHALL BE MOUNTED ALONG ENTIRE LENGTH OF TEMPORARY CONSTRUCTION BARRIER.
7. ADA-COMPLIANT ACCESS SHALL BE MAINTAINED AT ALL TIMES, INCLUDING PEDESTRIAN GUIDANCE SYSTEMS AT WORK ZONES, AS NEEDED. PEDESTRIAN DETOURS AND BYPASS ROUTES SHALL, WHERE DEEMED NECESSARY, INCLUDE ADA-COMPLIANT ROUTES WITH PROPER BARRICADES, RAILINGS, RAMPS, DETECTABLE WARNING PANELS, AND SIGNAGE.
8. THESE TRAFFIC CONTROL PLANS PRESENT A GENERAL SUGGESTED VIABLE MEANS OF PHASING THE CONSTRUCTION WHILE MAINTAINING AND CONTROLLING SAFE TRAFFIC OPERATIONS, AND ARE NOT INTENDED TO COVER ALL POTENTIAL SUB-PHASES AND INDIVIDUAL CONSTRUCTION ACTIVITIES AND OPERATIONS THAT THE CONTRACTOR MAY NEED OR CHOOSE TO UNDERTAKE OR EMPLOY. THE CONTRACTOR IS NOT BOUND BY OR RESTRICTED TO THE SPECIFIC PHASING PRESENTED SHOULD IT NOT SUPPORT HIS/HER PLANNED APPROACH TO CONSTRUCTION ACTIVITIES, AND SHALL SUBMIT CONSTRUCTION PHASING/TRAFFIC MANAGEMENT APPROACH AND PLANS IN CONFORMANCE WITH LATEST EDITION OF MUTCD FOR APPROVAL BY THE ENGINEER.

LEGEND:

- DRUM OR CONE
- SIGN
- WORK ZONE
- TRAFFIC FLOW
- TEMPORARY BARRIER LIMITED DEFLECTION TL-3
- TEMPORARY TRAFFIC SIGNAL
- TEMPORARY MAST ARM
- PEDESTRIAN CHANELLIZING DEVICE-TEMPORARY BARRIER TL-3
- IMPACT ATTENUATOR

Y13328.22_WARE BRIDGE_PHASE_1A.DWG Plotted on 4-Oct-2022 3:00 PM

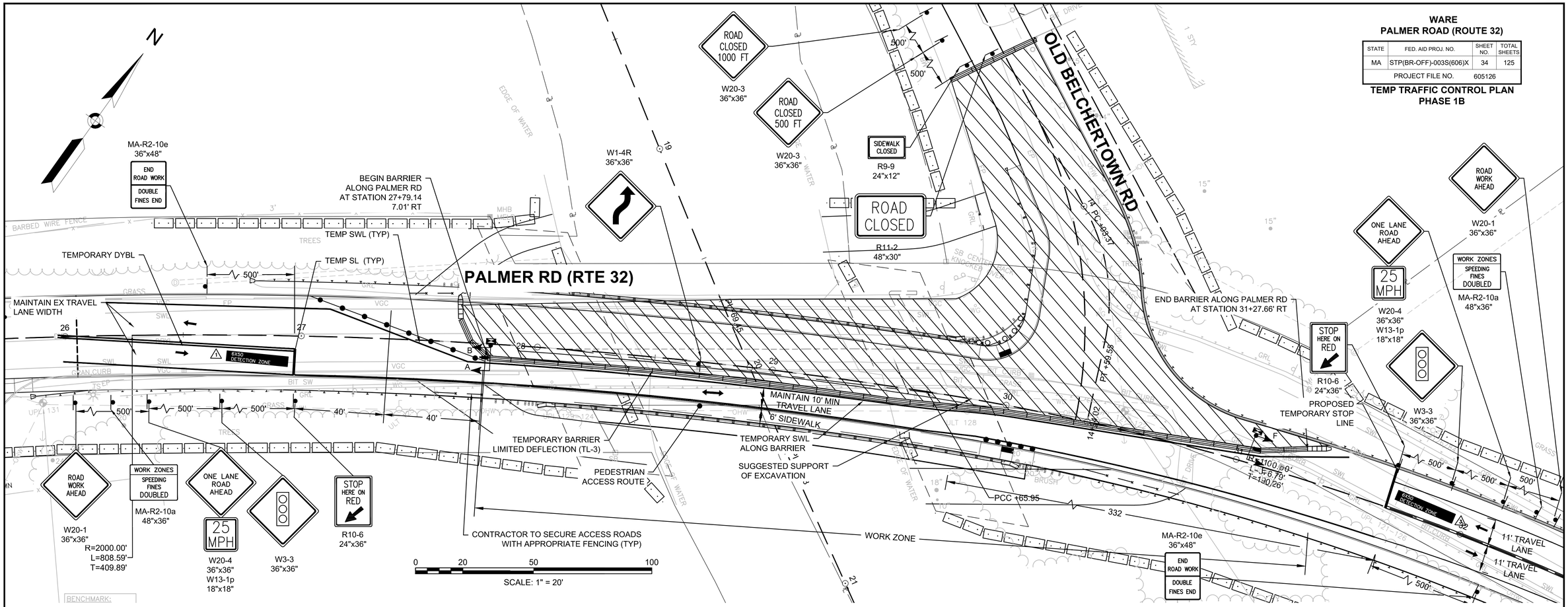

WARE
PALMER ROAD (ROUTE 32)

STATE	FED. AID PROJ. NO.	SHEET NO.	TOTAL SHEETS
MA	STP(BR-OFF)-003S(606)X	34	125
PROJECT FILE NO.	605126		

TEMP TRAFFIC CONTROL PLAN
PHASE 1B

Y13328.22_WARE BRIDGE_PHASE_1B.DWG Plotted on 4-Oct-2022 2:56 PM

PHASE 1B CONSTRUCTION ACTIVITY:

1. USE SHORT-DURATION, ONE WEEK, FULL CLOSURE OF OLD BELCHERTOWN RD
2. BEGIN CONSTRUCTION OF THE NORTHERN SIDE OF THE BRIDGE.
3. CONNECT UNDERGROUND UTILITIES FROM PALMER RD AND OLD BELCHERTOWN RD.
4. COMPLETE CONSTRUCTION OF APPROACH ROADWAY ALONG REVISED ALIGNMENT FOR OLD BELCHERTOWN RD.
5. PROVIDE SINGLE ALTERNATING TRAVEL LANE ON SOUTHERN SIDE OF BRIDGE.
6. ALL OLD BELCHERTOWN RD TRAFFIC AND PALMER ROAD TRUCK TRAFFIC TO BE DETOURED USING STAGE 2 CLOSURE DETOUR.

TTCP NOTES:

1. ALL TRAFFIC CONTROL DEVICES AND WORK ZONE SET-UPS ARE TO BE IN ACCORDANCE WITH THE MOST RECENT MASSDOT AND MUTCD STANDARDS.
2. CERTAIN SURFACE ROAD FEATURES ARE NOT SHOWN FOR DRAWING CLARITY.
3. ALL SIGNS AND TEMPORARY TRAFFIC SIGNALS SHALL BE MOUNTED ON SUITABLE TEMPORARY SUPPORTS SUCH THAT SIGNS/SIGNALS ARE CLEARLY VISIBLE TO APPROACHING TRAFFIC.
4. CONTRACTOR TO REMOVE ALL PAVEMENT MARKINGS IN CONFLICT WITH THE PROPOSED WORK ZONE SET-UP, INCLUDING EXISTING DOUBLE YELLOW CENTERLINES, BEFORE COMMENCEMENT OF WORK.
5. SEE SHEET 43 FOR CONSTRUCTION SIGN SUMMARY.
6. REFLECTORIZED DELINEATORS SHALL BE MOUNTED ALONG ENTIRE LENGTH OF TEMPORARY CONSTRUCTION BARRIER.
7. THREE (3) FLASHING WARNING BEACONS FACING ONCOMING TRAFFIC SHALL BE MOUNTED ON ALL TEMPORARY CONSTRUCTION BARRIER TAPERS AT 10 FT ON CENTER, STARTING AT THE BEGINNING OF THE TAPER WITHIN THE TRAVEL WAY.
8. ADA-COMPLIANT ACCESS SHALL BE MAINTAINED AT ALL TIMES, INCLUDING PEDESTRIAN GUIDANCE SYSTEMS AT WORK ZONES, AS NEEDED. PEDESTRIAN DETOURS AND BYPASS ROUTES SHALL, WHERE DEEMED NECESSARY, INCLUDE ADA-COMPLIANT ROUTES WITH PROPER BARRICADES, RAILINGS, RAMPS, DETECTABLE WARNING PANELS, AND SIGNAGE.
9. THESE TRAFFIC CONTROL PLANS PRESENT A GENERAL SUGGESTED VIABLE MEANS OF PHASING THE CONSTRUCTION WHILE MAINTAINING AND CONTROLLING SAFE TRAFFIC OPERATIONS, AND ARE NOT INTENDED TO COVER ALL POTENTIAL SUB-PHASES AND INDIVIDUAL CONSTRUCTION ACTIVITIES AND OPERATIONS THAT THE CONTRACTOR MAY NEED OR CHOOSE TO UNDERTAKE OR EMPLOY. THE CONTRACTOR IS NOT BOUND BY OR RESTRICTED TO THE SPECIFIC PHASING PRESENTED SHOULD IT NOT SUPPORT HIS/HER PLANNED APPROACH TO CONSTRUCTION ACTIVITIES, AND SHALL SUBMIT CONSTRUCTION PHASING/TRAFFIC MANAGEMENT APPROACH AND PLANS IN CONFORMANCE WITH LATEST EDITION OF MUTCD FOR APPROVAL BY THE ENGINEER.
11.

LEGEND:

- DRUM OR CONE
- SIGN
- WORK ZONE
- TRAFFIC FLOW
- TEMPORARY BARRIER LIMITED DEFLECTION TL-3
- TEMPORARY TRAFFIC SIGNAL
- TEMPORARY MAST ARM
- PEDESTRIAN CHANELLIZING DEVICE-TEMPORARY BARRIER TL-3
- IMPACT ATTENUATOR

APPROXIMATE NORTH

	ø2	ø6		
	⊥ ⊢ →	⊥ ⊣ ←		

TEMPORARY TRAFFIC SIGNAL SEQUENCE AND TIMING FOR FULL ACTUATED CONTROL (ISOLATED)

STREET	DIRECTION	HOUSINGS	1	2	3	4	5	6
PALMER RD	NB	A,B	G	Y	R	R	R	R
PALMER RD	SB	E,F	R	R	R	G	Y	R
TIMING IN SECONDS								
MINIMUM GREEN (INITIAL)			10			10		
PASSAGE TIME (VEHICLE)			3			3		
MAXIMUM 1 (3:00AM – 3:00PM)			19			29		
MAXIMUM 2 (3:00PM – 3:00AM)			36			35		
YELLOW CLEARANCE				3.5			3.5	
RED CLEARANCE					16			16
WALK (W)								
PEDESTRIAN CLEARANCE								
RECALL			MIN			MIN		
MEMORY			NON–LOCK			NON–LOCK		

PREFERENTIAL PHASING SEQUENCE

ø2 → ø6

ALL 12" LENS: R, Y, G — ALL

	MAJOR ITEMS REQUIRED	
PAY ITEM	QUANTITY	ITEM
816.81	2	PORTABLE TRAFFIC SIGNAL TRAILER, INCLUDING:
		(1) TRAFFIC SIGNAL CONTROLLER
		(2) 12" LED SIGNAL HEAD, 3–SECTION
		(1) VIDEO TRAFFIC DETECTION SYSTEM
		(1) SERVICE CONNECTION (SOLAR)
		(1) ADJUSTABLE MAST ARM
		(1) WIRELESS RADIO COMMUNICATION LINK

Plus all necessary duct, cable, labor, miscellaneous material and equipment to complete the installation.

DETECTOR DATA				
DETECTOR NO.	SIZE	OPERATIONS	DELAY/EXT (SEC)	CALL PHASE
1	6' x 50' ZONE	PRESENCE	0/0	ø2
2	6' x 50' ZONE	PRESENCE	0/0	ø6

SEQUENCE AND TIMING NOTES:

1. ALL TIMINGS ARE IN SECONDS.
2. ALL TRAFFIC CONTROL DEVICES ARE TO BE IN ACCORDANCE WITH THE MOST RECENT MASSDOT AND MUTCD STANDARDS.
3. PROPOSED TEMPORARY SIGNAL EQUIPMENT SHALL CONFORM TO THE LATEST MASSDOT APPROVED EQUIPMENT LIST.
4. ALL SIGNALS SHALL DISPLAY STEADY "R" IN THE EVENT OF A SIGNAL MALFUNCTION. THE POLICE SHALL BE NOTIFIED IMMEDIATELY.
5. SIGNAL TIMING SHALL BE RE-EVALUATED BY A LICENSED PROFESSIONAL ENGINEER AFTER ONE WEEK OF OPERATION (OR AS DIRECTED BY THE RESIDENT ENGINEER) AND ADJUSTED AS NEEDED.
6. PORTABLE TRAFFIC SIGNAL TRAILERS TO COMMUNICATE WITH EACH OTHER VIA WIRELESS RADIO COMMUNICATION LINKS.

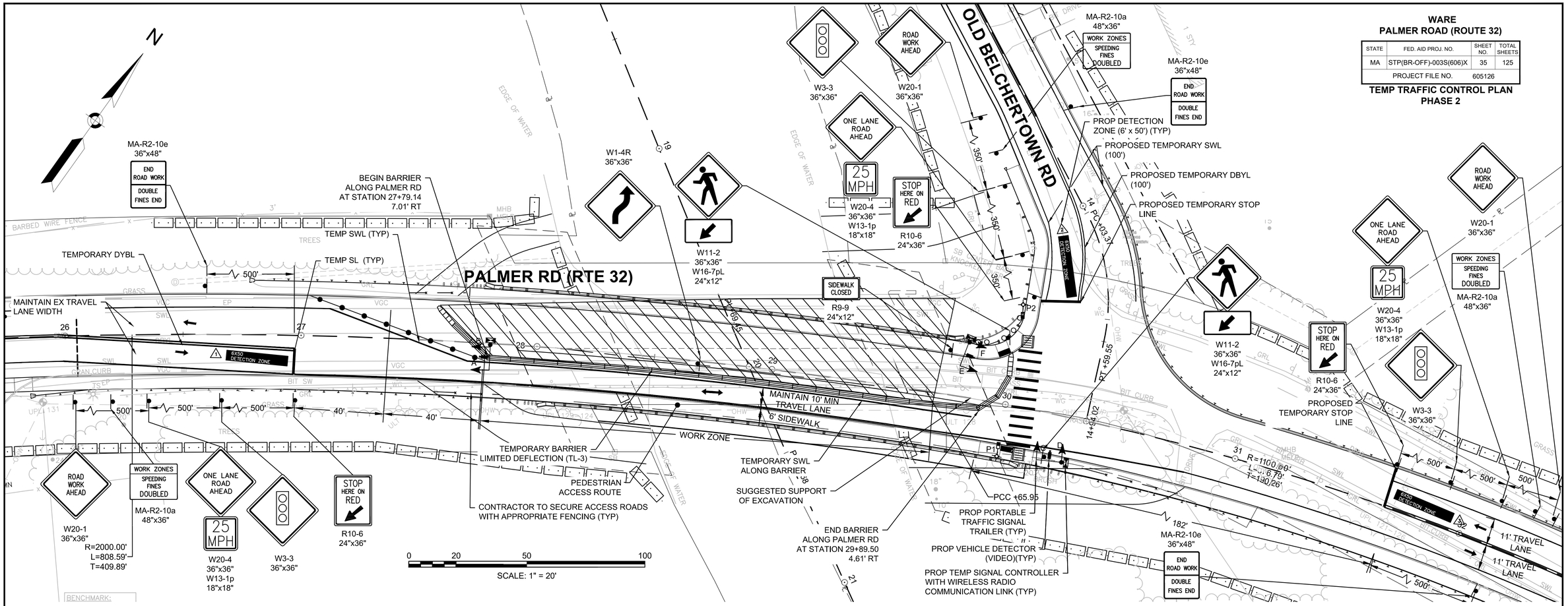

WARE
PALMER ROAD (ROUTE 32)

STATE	FED. AID PROJ. NO.	SHEET NO.	TOTAL SHEETS
MA	STP(BR-OFF)-003S(606)X	35	125
PROJECT FILE NO.	605126		

TEMP TRAFFIC CONTROL PLAN
PHASE 2

Plotted on 4-Oct-2022 2:52 PM

Y13328.22_WARE BRIDGE_PHASE_2.DWG

STAGE 2 CONSTRUCTION ACTIVITY:
1. CONSTRUCT THE NORTHERN SIDE OF THE BRIDGE
2. PROVIDE SINGLE ALTERNATING TRAVEL LANE ON SOUTHERN SIDE OF BRIDGE

TTCP NOTES:
1. ALL TRAFFIC CONTROL DEVICES AND WORK ZONE SET-UPS ARE TO BE IN ACCORDANCE WITH THE MOST RECENT MASSDOT AND MUTCD STANDARDS.
2. CERTAIN SURFACE ROAD FEATURES ARE NOT SHOWN FOR DRAWING CLARITY.
3. ALL SIGNS AND TEMPORARY TRAFFIC SIGNALS SHALL BE MOUNTED ON SUITABLE TEMPORARY SUPPORTS SUCH THAT SIGNS/SIGNALS ARE CLEARLY VISIBLE TO APPROACHING TRAFFIC.
4. CONTRACTOR TO REMOVE ALL PAVEMENT MARKINGS IN CONFLICT WITH THE PROPOSED WORK ZONE SET-UP, INCLUDING EXISTING DOUBLE YELLOW CENTERLINES, BEFORE COMMENCEMENT OF WORK.
5. SEE SHEET 43 FOR CONSTRUCTION SIGN SUMMARY.
6. REFLECTORIZED DELINEATORS SHALL BE MOUNTED ALONG ENTIRE LENGTH OF TEMPORARY CONSTRUCTION BARRIER.
7. THREE (3) FLASHING WARNING BEACONS FACING ONCOMING TRAFFIC SHALL BE MOUNTED ON ALL TEMPORARY CONSTRUCTION BARRIER TAPERS AT 10 FT ON CENTER, STARTING AT THE BEGINNING OF THE TAPER WITHIN THE TRAVEL WAY.
8. ADA-COMPLIANT ACCESS SHALL BE MAINTAINED AT ALL TIMES, INCLUDING PEDESTRIAN GUIDANCE SYSTEMS AT WORK ZONES, AS NEEDED. PEDESTRIAN DETOURS AND BYPASS ROUTES SHALL, WHERE DEEMED NECESSARY, INCLUDE ADA-COMPLIANT ROUTES WITH PROPER BARRICADES, RAILINGS, RAMPS, DETECTABLE WARNING PANELS, AND SIGNAGE.
9. THESE TRAFFIC CONTROL PLANS PRESENT A GENERAL SUGGESTED VIABLE MEANS OF PHASING THE CONSTRUCTION WHILE MAINTAINING AND CONTROLLING SAFE TRAFFIC OPERATIONS, AND ARE NOT INTENDED TO COVER ALL POTENTIAL SUB-PHASES AND INDIVIDUAL CONSTRUCTION ACTIVITIES AND OPERATIONS THAT THE CONTRACTOR MAY NEED OR CHOOSE TO UNDERTAKE OR EMPLOY. THE CONTRACTOR IS NOT BOUND BY OR RESTRICTED TO THE SPECIFIC PHASING PRESENTED SHOULD IT NOT SUPPORT HIS/HER PLANNED APPROACH TO CONSTRUCTION ACTIVITIES, AND SHALL SUBMIT CONSTRUCTION PHASING/TRAFFIC MANAGEMENT APPROACH AND PLANS IN CONFORMANCE WITH LATEST EDITION OF MUTCD FOR APPROVAL BY THE ENGINEER.

LEGEND:
- DRUM OR CONE
- SIGN
- WORK ZONE
- TRAFFIC FLOW
- TEMPORARY BARRIER LIMITED DEFLECTION TL-3
- TEMPORARY TRAFFIC SIGNAL
- TEMPORARY MAST ARM
- PEDESTRIAN CHANELLIZING DEVICE - TEMPORARY BARRIER TL-3
- IMPACT ATTENUATOR

APPROXIMATE NORTH

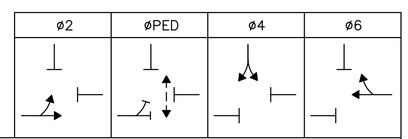

TEMPORARY TRAFFIC SIGNAL SEQUENCE AND TIMING FOR FULL ACTUATED CONTROL (ISOLATED)

STREET	DIRECTION	HOUSINGS	1	2	3	4	5	6	7	8	9	10	11	12
PALMER RD	NB	A,B	G	Y	R	R	R	R	R	R	R	R	R	R
OLD BELCHERTOWN RD	EB	C,D	R	R	R	R	R	R	G	Y	R	R	R	R
PALMER RD	SB	E,F	R	R	R	R	R	R	R	R	R	G	Y	R
PALMER RD	EB/EB	P1–P2	DW	DW	DW	W	FDW	DW	DW	DW	DW	DW	DW	DW
TIMING IN SECONDS														
MINIMUM GREEN (INITIAL)			10						6			10		
PASSAGE TIME (VEHICLE)			3						3			3		
MAXIMUM 1 (3:00AM – 3:00PM)			19						6			29		
MAXIMUM 2 (3:00PM – 3:00AM)			36						8			35		
YELLOW CLEARANCE				3.5						3			3.5	
RED CLEARANCE					13						3			16
WALK (W)						7								
PEDESTRIAN CLEARANCE							12	4						
RECALL			MIN			NONE			NONE			MIN		
MEMORY			NON–LOCK			LOCK			NON–LOCK			NON–LOCK		

PREFERENTIAL PHASING SEQUENCE

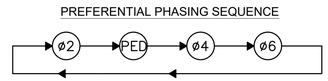

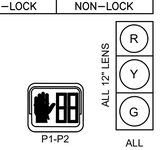

	MAJOR ITEMS REQUIRED	
PAY ITEM	QUANTITY	ITEM
816.81	3	PORTABLE TRAFFIC SIGNAL TRAILER, INCLUDING:
		(1) TRAFFIC SIGNAL CONTROLLER
		(2) 12" LED SIGNAL HEAD, 3–SECTION
		(1) VIDEO TRAFFIC DETECTION SYSTEM
		(1) SERVICE CONNECTION (SOLAR)
		(1) ADJUSTABLE MAST ARM
		(1) WIRELESS RADIO COMMUNICATION LINK
	2	TEMPORARY PEDESTRIAN SIGNAL WITH POST AND BASE
	2	PEDESTRIAN PUSH BUTTON

Plus all necessary duct, cable, labor, miscellaneous material and equipment to complete the installation.

DETECTOR DATA

DETECTOR NO.	SIZE	OPERATIONS	DELAY/EXT (SEC)	CALL PHASE
1	6' x 50' ZONE	PRESENCE	0/0	ø2
2	6' x 50' ZONE	PRESENCE	0/0	ø4
3	6' x 50' ZONE	PRESENCE	0/0	ø6

SEQUENCE AND TIMING NOTES:
1. ALL TIMINGS ARE IN SECONDS.
2. ALL TRAFFIC CONTROL DEVICES ARE TO BE IN ACCORDANCE WITH THE MOST RECENT MASSDOT AND MUTCD STANDARDS.
3. PROPOSED TEMPORARY SIGNAL EQUIPMENT SHALL CONFORM TO THE LATEST MASSDOT APPROVED EQUIPMENT LIST.
4. ALL SIGNALS SHALL DISPLAY STEADY "R" IN THE EVENT OF A SIGNAL MALFUNCTION. THE POLICE SHALL BE NOTIFIED IMMEDIATELY.
5. SIGNAL TIMING SHALL BE RE-EVALUATED BY A LICENSED PROFESSIONAL ENGINEER AFTER ONE WEEK OF OPERATION (OR AS DIRECTED BY THE RESIDENT ENGINEER) AND ADJUSTED AS NEEDED.
6. PORTABLE TRAFFIC SIGNAL TRAILERS TO COMMUNICATE WITH EACH OTHER VIA WIRELESS RADIO COMMUNICATION LINKS.
7. PHASE 4 SHALL ALWAYS BE FOLLOWED BY PHASE 6.

NOTES:

1. CURB RAMPS SHALL BE 60 IN. MINIMUM WIDTH WITH A FIRM, STABLE AND NON-SLIP SURFACE.
2. PROTECTIVE EDGING WITH A 2 IN. MINIMUM HEIGHT SHALL BE INSTALLED WHEN THE CURB RAMP OR LANDING PLATFORM HAS A VERTICAL DROP OF 6 IN. OR GREATER OR HAS A SIDE APRON SLOP STEEPER THAN 1:3 (33%). PROTECTIVE EDGING SHOULD BE CONSIDERED WHEN THE CURB RAMPS OR LANDING PLATFORMS HAVE A VERTICAL DROP OF 3 IN. OR MORE.
3. DETECTABLE EDGING WITH 6 IN. MINIMUM HEIGHT AND CONTRASTING COLOR SHALL BE INSTALLED ON ALL CURB RAMP LANDINGS WHERE THE WALKWAY CHANGES DIRECTION (TURNS).
4. THE CURB RAMP WALKWAY AND LANDING AREA SURFACE SHALL BE OF A SOLID CONTINUOUS CONTRASTING COLOR ABUTTING UP TO THE EXISTING SIDEWALK.
5. CURB RAMPS AND LANDINGS SHOULD HAVE A 1:50 (2%) MAX CROSS-SLOPE.
6. CLEAR SPACE OF 48x48 IN. MINIMUM SHALL BE PROVIDED ABOVE AND BELOW THE CURB RAMP.
7. WATER FLOW IN THE GUTTER SYSTEM SHALL HAVE MINIMAL RESTRICTION.
8. LATERAL JOINTS OR GAPS BETWEEN SURFACES SHALL BE LESS THAN 0.5 IN. WIDTH.
9. CHANGES BETWEEN SURFACE HEIGHTS SHOULD NOT EXCEED 0.5 IN. LATERAL EDGES SHOULD BE VERTICAL UP TO 0.25 IN. HIGH, AND BEVELED AT 1:2 BETWEEN 0.25 IN. AND 0.5 IN. HEIGHT.
10. IF A TEMPORARY PEDESTRIAN RAMP LEADS TO A CROSSWALK, THEN A DETECTABLE WARNING PAD MUST BE ADHERED TO THE BASE OF THE RAMP. IF IT LEADS TO A PROTECTED PEDESTRIAN BYPASS THAT DOES NOT CONFLICT WITH VEHICULAR TRAFFIC, THEN A PAD SHALL NOT BE INSTALLED ON THE RAMP.

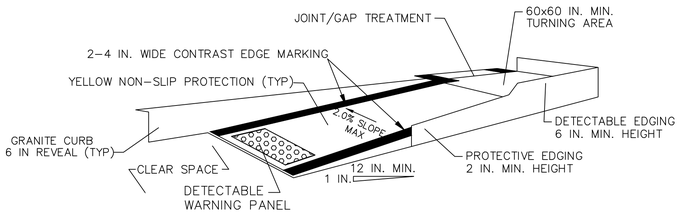

TEMPORARY CURB RAMP-PARALLEL TO CURB

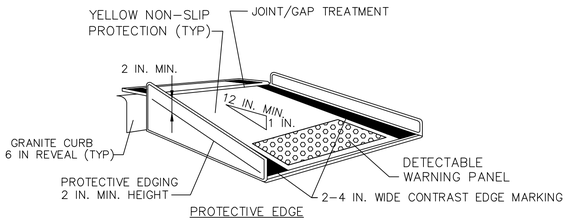

TEMPORARY CURB RAMP DETAIL

NOT TO SCALE

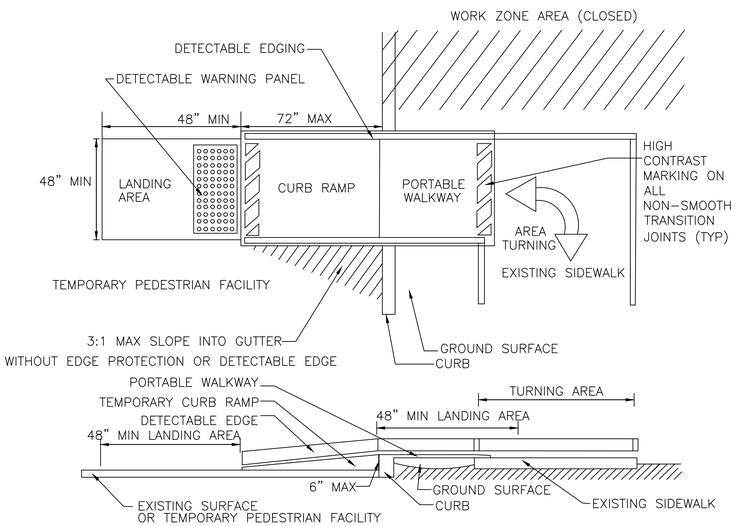

TEMPORARY CURB RAMP - TYPE 2 DETAIL

NOT TO SCALE

WARE
PALMER ROAD (ROUTE 32)

STATE	FED. AID PROJ. NO.	SHEET NO.	TOTAL SHEETS
MA	STP(BR-OFF)-003S(606)X	36	125
PROJECT FILE NO.	605126		

TEMP TRAFFIC CONTROL PLAN
PEDESTRIAN DETAILS

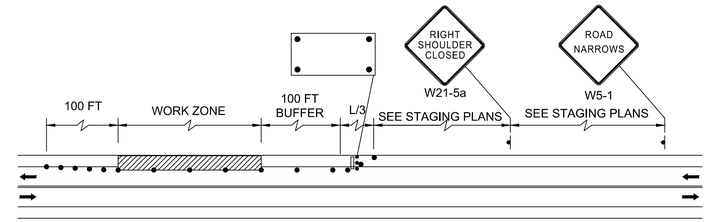

TWO LANE ROAD SHOULDER CLOSED

NOT TO SCALE

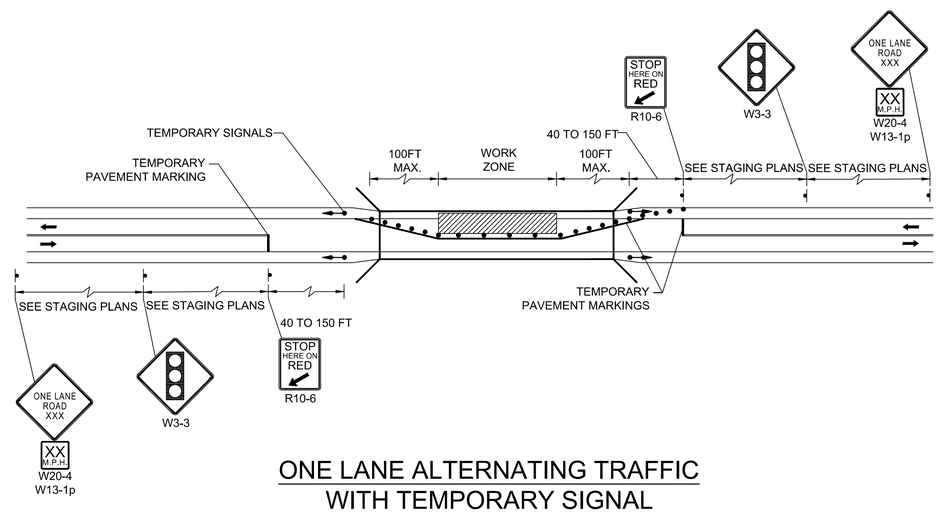

ONE LANE ALTERNATING TRAFFIC WITH TEMPORARY SIGNAL

NOT TO SCALE

Y13328.22_WARE BRIDGE_PHASE_1.DWG Plotted on 4-Oct-2022 3:09 PM

WARE
PALMER ROAD/ROUTE 32 OVER WARE RIVER
BRIDGE NO. W-05-015

STATE	FED. AID PROJ. NO.	SHEET NO.	TOTAL SHEETS
MA	STP(BR-OFF)-003S(606)X	37	125
PROJECT FILE NO.	605126		

WARE RIVER BRIDGE STAGE 1 CLOSURE DETOUR
SHEET 1 OF 3

NOTES:
1. DETOUR SIGNS FOR STAGE 1 SHALL BE COVERED WHEN ALTERNATING ONE-WAY TRAFFIC SIGNAL IS ACTIVE, AND SHALL BE UNCOVERED WHEN FULL BRIDGE CLOSURE IS USED DURING STAGE 1 BRIDGE CONSTRUCTION.
2. SEE TEMP TRAFFIC CONTROL PLAN FOR STAGE 1 WORK ZONE SETUP WHEN ALTERNATING ONE-WAY TRAFFIC SIGNAL IS ACTIVE. WHEN FULL BRIDGE CLOSURE IS USED DURING STAGE 1, TYPE III BARRICADES SHALL BE USED TO CLOSE PALMER ROAD.
3. PROVIDE PORTABLE VARIABLE MESSAGE SIGNS ON ROUTE 32 IN BOTH DIRECTIONS IN ADVANCE OF THE START OF THE DETOUR.

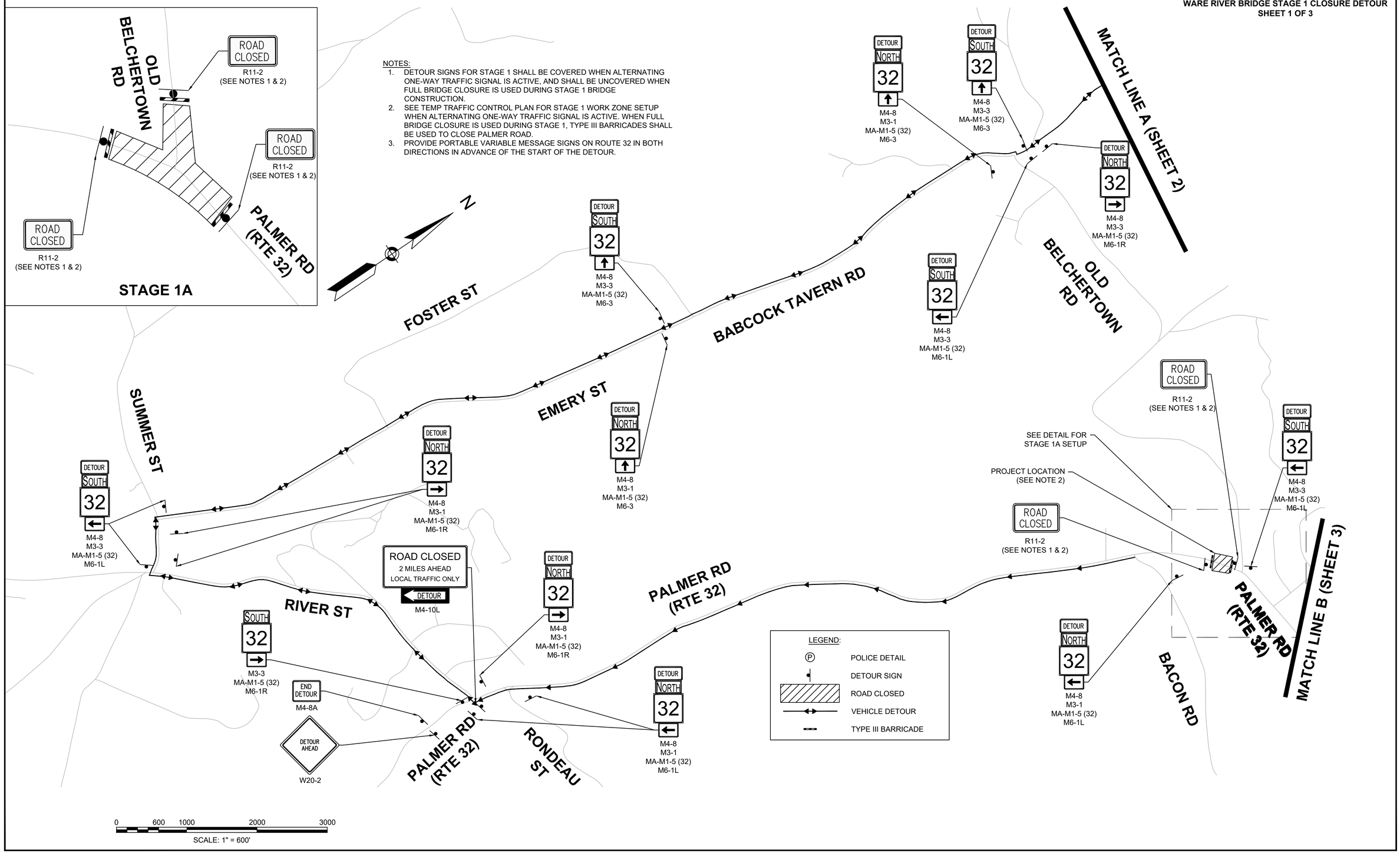

WARE ROUTE 32 BRIDGE - Y13328.22 - DETOUR PLANS.DWG Plotted on 4-Oct-2022 3:12 PM

NOTES: SEE STAGE 1 SHEET 1 OF 3
FOR STAGE 1 DETOUR NOTES

WARE
PALMER ROAD/ROUTE 32 OVER WARE RIVER
BRIDGE NO. W-05-015

STATE	FED. AID PROJ. NO.	SHEET NO.	TOTAL SHEETS
MA	STP(BR-OFF)-003S(606)X	38	125
PROJECT FILE NO.	605126		

WARE RIVER BRIDGE STAGE 1 CLOSURE DETOUR
SHEET 2 OF 3

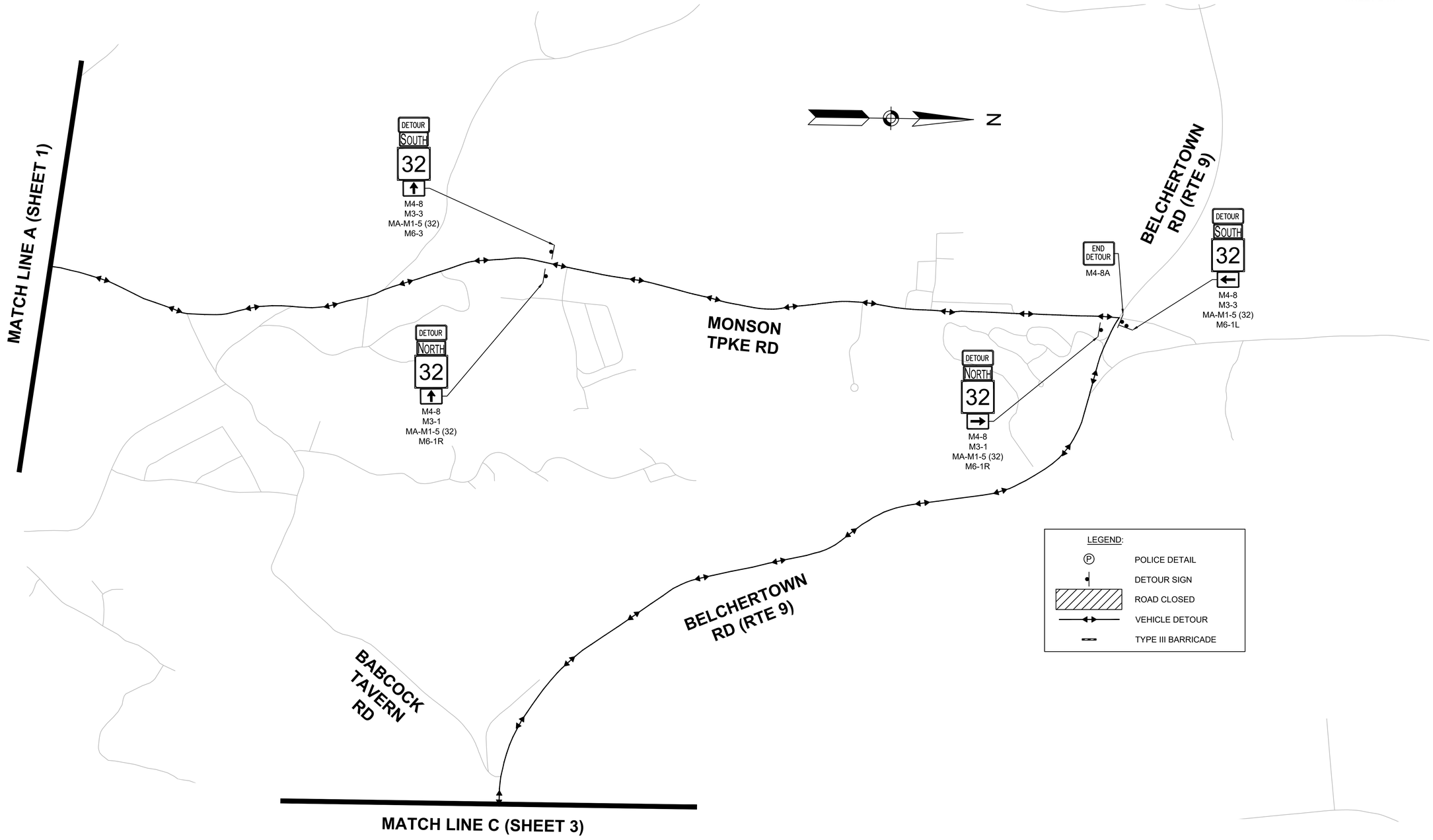

0 600 1000 2000 3000
SCALE: 1" = 600'

WARE ROUTE 32 BRIDGE - Y13328.22 - DETOUR PLANS.DWG Plotted on 4-Oct-2022 3:12 PM

WARE
PALMER ROAD/ROUTE 32 OVER WARE RIVER
BRIDGE NO. W-05-015

STATE	FED. AID PROJ. NO.	SHEET NO.	TOTAL SHEETS
MA	STP(BR-OFF)-003S(606)X	39	125
PROJECT FILE NO.	605126		

WARE RIVER BRIDGE STAGE 1 CLOSURE DETOUR
SHEET 3 OF 3

NOTES: SEE STAGE 1 SHEET 1 OF 3
FOR STAGE 1 DETOUR NOTES

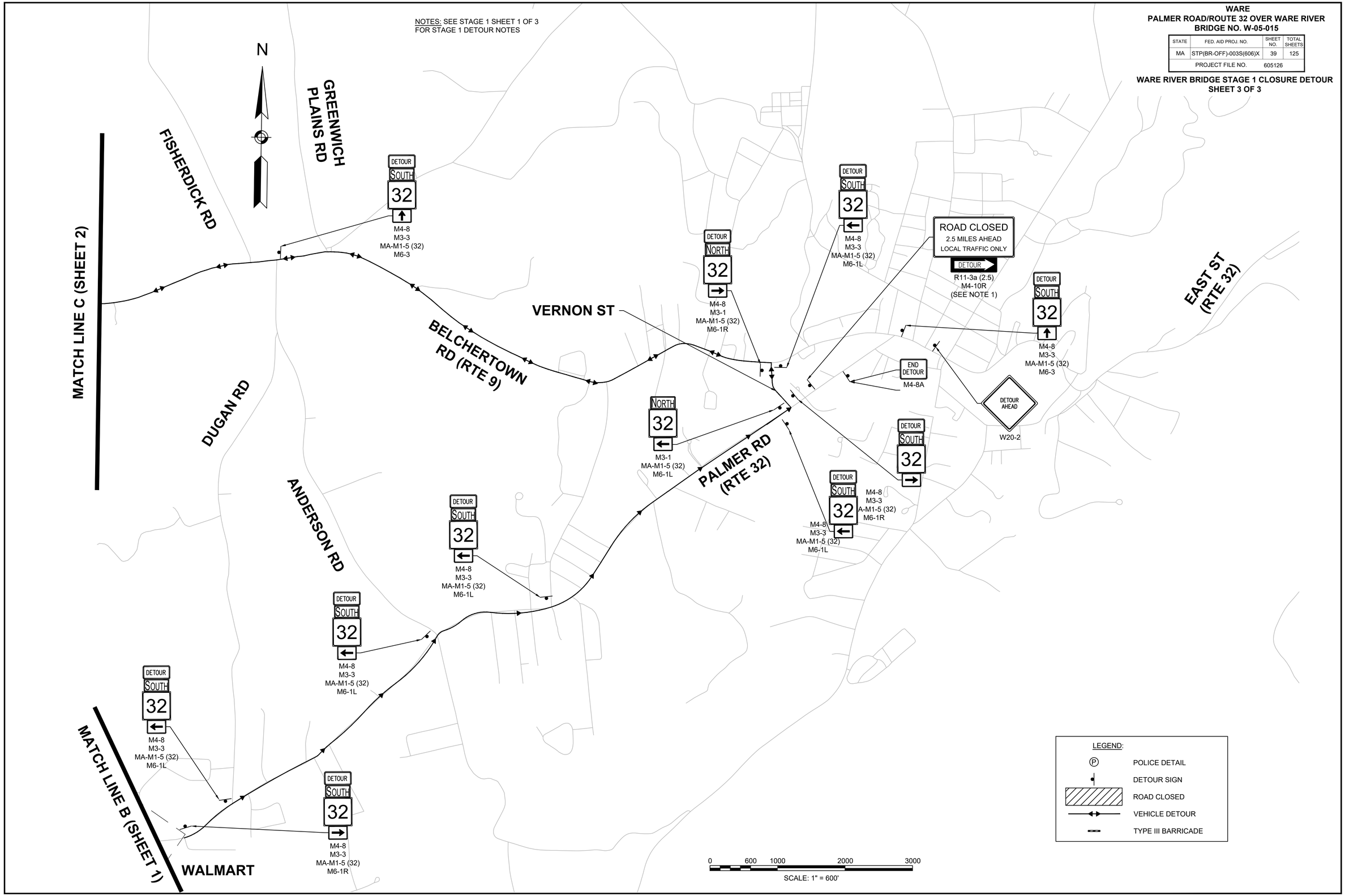

WARE ROUTE 32 BRIDGE - Y13328.22 - DETOUR PLANS.DWG Plotted on 4-Oct-2022 3:12 PM

WARE
PALMER ROAD/ROUTE 32 OVER WARE RIVER
BRIDGE NO. W-05-015

STATE	FED. AID PROJ. NO.	SHEET NO.	TOTAL SHEETS
MA	STP(BR-OFF)-003S(606)X	40	125
PROJECT FILE NO.	605126		

WARE RIVER BRIDGE STAGE 2 CLOSURE AND TRUCK DETOUR
SHEET 1 OF 3

NOTES:
1. THE FOLLOWING TRAFFIC SIGNS SHALL BE COVERED ONLY WHEN ONE-WAY ALTERNATING TRAFFIC SIGNAL IS ACTIVE DURING STAGE 2: R11-2 ("ROAD CLOSED"), R11-3a ("ROAD CLOSED -X MILES AHEAD - LOCAL TRAFFIC ONLY"), AND M4-10 L/R ("DETOUR" WITH ARROW"). THE FOLLOWING TRAFFIC SIGNS SHALL BE COVERED ONLY WHEN FULL BRIDGE CLOSURE IS USED DURING STAGE 2: M4-4 ("TRUCKS"). ALL OTHER DETOUR SIGNS SHALL REMAIN UNCOVERED FOR THE ENTIRE DURATION OF STAGE 2 BRIDGE CONSTRUCTION.
2. SEE TEMP TRAFFIC CONTROL PLAN FOR STAGE 2 WORK ZONE SETUP WHEN ALTERNATING ONE-WAY TRAFFIC SIGNAL IS ACTIVE. WHEN FULL BRIDGE CLOSURE IS USED DURING STAGE 2, TYPE III BARRICADES SHALL BE USED TO CLOSE PALMER ROAD.
3. PROVIDE PORTABLE VARIABLE MESSAGE SIGNS ON ROUTE 32 IN BOTH DIRECTIONS IN ADVANCE OF THE START OF THE DETOUR.

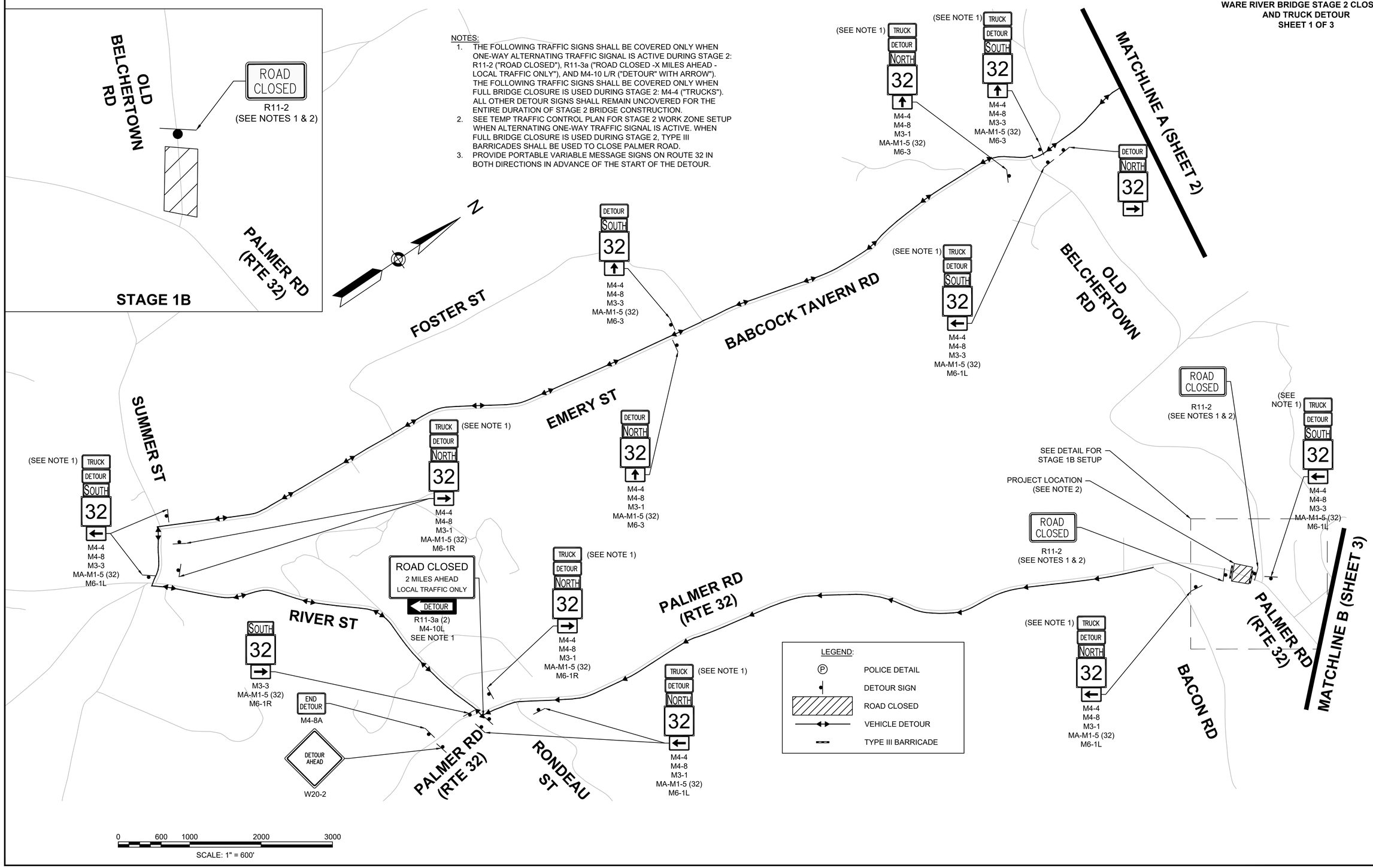

WARE ROUTE 32 BRIDGE - Y13328.22 - DETOUR PLANS.DWG
Plotted on 4-Oct-2022 3:12 PM

WARE
PALMER ROAD/ROUTE 32 OVER WARE RIVER
BRIDGE NO. W-05-015

STATE	FED. AID PROJ. NO.	SHEET NO.	TOTAL SHEETS
MA	STP(BR-OFF)-003S(606)X	41	125
PROJECT FILE NO.	605126		

WARE RIVER BRIDGE STAGE 2 CLOSURE AND TRUCK DETOUR
SHEET 2 OF 3

NOTES: SEE STAGE 2 SHEET 1 OF 3
FOR STAGE 2 DETOUR NOTES

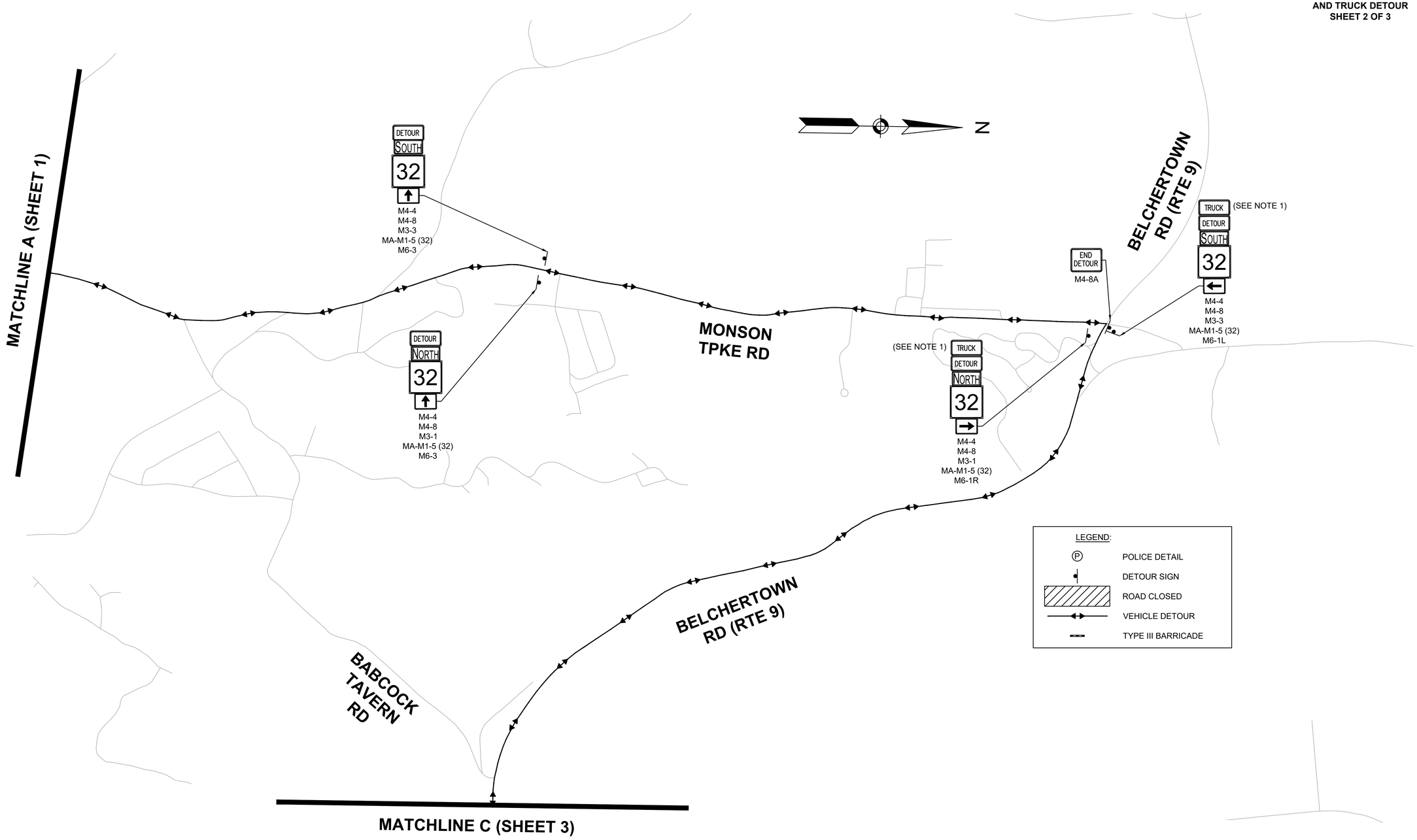

0 600 1000 2000 3000
SCALE: 1" = 600'

WARE ROUTE 32 BRIDGE - Y13328.22 - DETOUR PLANS.DWG Plotted on 4-Oct-2022 3:12 PM

WARE
PALMER ROAD/ROUTE 32 OVER WARE RIVER
BRIDGE NO. W-05-015

STATE	FED. AID PROJ. NO.	SHEET NO.	TOTAL SHEETS
MA	STP(BR-OFF)-003S(606)X	42	125
PROJECT FILE NO.	605126		

WARE RIVER BRIDGE STAGE 2 CLOSURE AND TRUCK DETOUR
SHEET 3 OF 3

NOTES: SEE STAGE 2 SHEET 1 OF 3 FOR STAGE 2 DETOUR NOTES

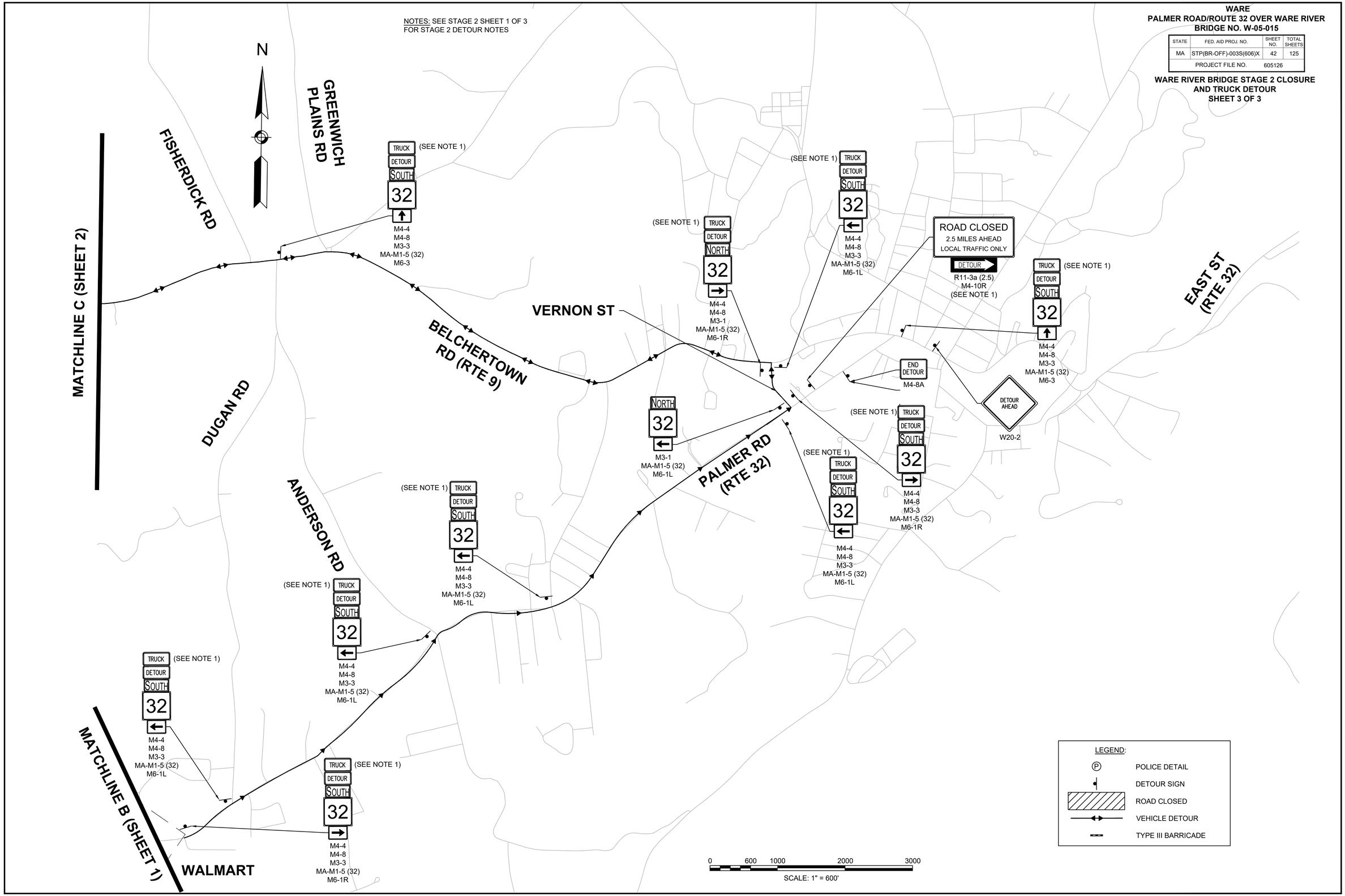

WARE ROUTE 32 BRIDGE - Y13328.22 - DETOUR PLANS.DWG Plotted on 4-Oct-2022 3:12 PM

WARE
PALMER ROAD/ROUTE 32 OVER WARE RIVER
BRIDGE NO. W-05-015

STATE	FED. AID PROJ. NO.	SHEET NO.	TOTAL SHEETS
MA	STP(BR-OFF)-003S(606)X	43	125
PROJECT FILE NO.	605126		

WARE RIVER BRIDGE CLOSURE DETOUR SIGN SUMMARY

DETOUR SIGN SUMMARY

IDENTIFICATION NUMBER	SIZE OF SIGN (INCHES)		UNIT AREA SF	TEXT	TEXT DIMENSIONS			NUMBER OF SIGNS REQUIRED	COLOR			POST SIZE AND NUMBER REQUIRED PER SIGN	AREA IN SQUARE FEET
	WIDTH	HEIGHT			LETTER HEIGHT	VERTICAL SPACING	ARROW RTE MKR		BACK-GROUND	LEGEND	BORDER		
R11-2	48"	30"	10.00	ROAD CLOSED	SEE MUTCD STANDARD DETAIL			3	SEE MUTCD STANDARD DETAIL			3	30.00
R11-3a (2)	60"	30"	12.50	ROAD CLOSED 2 MILES AHEAD LOCAL TRAFFIC ONLY				1				2	12.50
R11-3a (2.5)	60"	30"	12.50	ROAD CLOSED 2.5 MILES AHEAD LOCAL TRAFFIC ONLY				1				2	12.50
MA-M1-5 (32)	24"	24"	4.00	32				26	WHITE		BLACK	MOUNT W/M4-8	104.00
M3-1	24"	12"	2.00	NORTH				10	WHITE	BLACK	BLACK	MOUNT W/M4-8	20.00
M3-3	24"	12"	2.00	SOUTH				10	WHITE	BLACK	BLACK	MOUNT W/M4-8	20.00
M4-4	36"	12"	3.00	TRUCK				21	WHITE	BLACK	BLACK	MOUNT W/M4-8	63.00
M4-8	12"	6"	0.50	DETOUR				25	FLUOR. ORANGE	BLACK	BLACK	25	12.50
M4-8A	24"	18"	3.00	END DETOUR				3	FLUOR. ORANGE	BLACK	BLACK	3	9.00
M4-10L	48"	18"	6.00	DETOUR				1	BLACK	BLACK	BLACK	MOUNT W/R11-3a (2)	6.00
M4-10R	48"	18"	6.00	DETOUR				1	BLACK	FLUOR. ORANGE	BLACK	MOUNT W/R11-3a (2.5)	6.00
M6-1L	21"	15"	2.19	←				12	WHITE	BLACK	BLACK	MOUNT W/M4-8	26.28
M6-1R	21"	15"	2.19	→				8	WHITE	BLACK	BLACK	MOUNT W/M4-8	17.52
M6-3	21"	15"	2.19	↑				6	WHITE	BLACK	BLACK	MOUNT W/M4-8	13.14
W20-2	36"	36"	9.00	DETOUR AHEAD				2	FLUOR. ORANGE	BLACK	BLACK	2	18.00

TOTAL: 370.44 SF

TMP SIGN SUMMARY

IDENTIFICATION NUMBER	SIZE OF SIGN (IN)		UNIT AREA SF	TEXT	TEXT DIMENSIONS (IN)			NUMBER OF SIGNS REQUIRED	COLOR			POST SIZE AND NUMBER REQUIRED	AREA (SF)
	WIDTH	HEIGHT			LETTER HEIGHT	VERTICAL SPACING	ARROW RTE MKR		BACKGROUND	LEGEND	BORDER		
MA-R2-10a	48	36	12.00	WORK ZONE SPEEDING FINE DOUBLED	SEE MASSDOT STANDARD DETAILS			3	FLORESCENT ORANGE/ WHITE	BLACK	BLACK	-	36.00
MA-R2-10e	36	48	12.00	END ROAD WORK DOUBLE FINES END	SEE MASSDOT STANDARD DETAILS			3	FLORESCENT ORANGE/ WHITE	BLACK	BLACK	-	36.00
R9-9	24	12	2.00	SIDEWALK CLOSED	SEE MUTCD STANDARD DETAILS			1	WHITE	BLACK	BLACK	-	2.00
R9-11aL	24	12	2.00	SIDEWALK CLOSED ← CROSS HERE				1	WHITE	BLACK	BLACK	-	2.00
R10-6	24	36	6.00	STOP HERE ON RED				3	WHITE	BLACK	BLACK	-	18.00
W1-4L	36	36	9.00					3	FLORESCENT ORANGE	BLACK	BLACK	-	27.00
W1-4R	36	36	9.00					1	FLORESCENT ORANGE	BLACK	BLACK	-	9.00
W3-3	36	36	9.00					3	FLORESCENT ORANGE	BLACK	BLACK	-	27.00
W11-2	36	36	9.00					4	FLORESCENT ORANGE	BLACK	BLACK	-	36.00
W13-1P	18	18	2.25	25 MPH				3	FLORESCENT ORANGE	BLACK	BLACK	-	6.75
W16-7pL	24	12	2.00	↙				4	FLORESCENT ORANGE	BLACK	BLACK	-	8.00
W20-1	36	36	9.00	ROAD WORK AHEAD				3	FLORESCENT ORANGE	BLACK	BLACK	-	27.00
W20-4	36	36	9.00	ONE LANE ROAD AHEAD				3	FLORESCENT ORANGE	BLACK	BLACK	-	27.00

TOTAL: 261.75 SF

TOTAL: 632.19 SF

WARE ROUTE 32 BRIDGE - Y13328.22 - DETOUR PLANS.DWG
Plotted on 4-Oct-2022 3:14 PM

UTILITY NOTES:

1. THE SURFACE EVIDENCE OF THE UTILITIES SHOWN HAS BEEN LOCATED BY FIELD SURVEY. THE LINEWORK REPRESENTING ALL UNDERGROUND STRUCTURES AND PIPES HAS BEEN SHOWN HEREON IN ITS APPROXIMATE LOCATION BASED ON AVAILABLE RECORD PLANS. THE CONTRACTOR DOES NOT WARRANT THAT THE UNDERGROUND UTILITIES SHOWN ARE IN THE EXACT LOCATION INDICATED ALTHOUGH THEY ARE LOCATED AS ACCURATELY AS POSSIBLE FROM INFORMATION AVAILABLE. THE CONTRACTOR SHALL NOTIFY THE OWNER IF AN UNMARKED UTILITY IS LOCATED OR IF A UTILITY IS FOUND TO INTERFERE WITH EXISTING OR FUTURE CONSTRUCTION. AT LEAST THREE BUSINESS DAYS BEFORE INITIATING WORK THE CONTRACTOR IS REQUIRED TO CALL DIG-SAFE AT 1-888-344-7233.
2. THE CONTRACTOR SHALL CONTACT UTILITY COMPANIES DIRECTLY PRIOR TO DOING ANY WORK. THE CONTRACTOR SHALL OBTAIN AND ADHERE TO THE SPECIFICATIONS (LATEST REVISIONS) OF, TOWN OF WARE, MASSACHUSETTS DEPARTMENT OF TRANSPORTATION (MASSDOT), AND ANY OTHER PERTINENT UTILITY COMPANY THAT MAY BE WITHIN THE LIMIT OF WORK. ALL UTILITY INSTALLATIONS ASSOCIATED WITH PRIVATE OR PUBLIC UTILITY COMPANIES SHALL COMPLY WITH THE STANDARDS, DETAILS, AND SPECIFICATIONS OF THE RESPECTIVE UTILITY COMPANY, INCLUDING MATERIALS, EQUIPMENT, METHODS, AND PROCEDURES.
3. THE CONTRACTOR SHALL COMPLY WITH MASSACHUSETTS GENERAL LAWS, CHAPTER 82A, PERTAINING TO RETAINION OF OPEN EXCAVATIONS, AS DETAILED IN SECTION 520 CMR 14.00 OF THE CODE OF MASSACHUSETTS REGULATIONS.
4. THE CONTRACTOR SHALL PROVIDE THE OWNER WITH AN AS-BUILT PLAN OF ALL UTILITIES INSTALLED, RELOCATED, OR ABANDONED.
5. THE CONTRACTOR SHALL MAINTAIN FREE AND UNOBSTRUCTED ACCESS TO ALL MANHOLES AT ALL TIMES FOR UTILITY COMPANY PERSONNEL AND VEHICLES. IT SHALL BE THE CONTRACTOR 'S RESPONSIBILITY TO MAINTAIN CONTINUOUS SERVICE FOR, AND PREVENT DAMAGE TO, ALL UTILITIES.
6. THE CONTRACTOR SHALL BE RESPONSIBLE FOR VERIFYING THE EXACT LOCATION OF EXISTING UTILITIES (INCLUDING ABANDONED UTILITIES AND ALL LATERALS AND SERVICES) AT LOCATIONS WHERE PROPOSED UTILITIES CROSS EXISTING UTILITIES AND FOUNDATIONS BEFORE STARTING ANY WORK.
7. REFER TO STRUCTURAL PLANS FOR UTILITY SUPPORTS, DIAPHRAGMS, BACKWALL SLEEVES, APPROACH SLAB, MOMENT SLAB, AND ABUTMENT DETAILS.
8. ALL STRUCTURES TO BE ADJUSTED TO GRADE SHALL BE FLUSH WITH PROPOSED SURFACE.
9. EXISTING PIPES/STRUCTURES TO REMAIN IN SERVICE SHALL BE CLEANED OF SEDIMENT

WATER UTILITY RELOCATION NOTES:

1. COORDINATE WITH THE TOWN OF WARE WATER UTILITY REGARDING OPERATION OF ALL VALVES AND FOR SCHEDULING THE FINAL CONNECTIONS TO THE EXISTING WATER MAIN. EXISTING WATER MAIN SHALL REMAIN IN SERVICE UP UNTIL THE FINAL CONNECTIONS TO THE NEW WATER MAIN ARE PERFORMED. SHUTDOWNS OF THE EXISTING WATER MAIN SHALL BE PERMITTED: THE CONTRACTOR SHALL PROVIDE WRITTEN REASONING FOR EACH SHUT DOWN AND MUST BE APPROVED BY THE ENGINEER AND TOWN OF WARE. EACH SHUTDOWN SHALL OCCUR DURING OVERNIGHT HOURS AND SHALL NOT EXCEED 12-HOURS IN DURATION. THE CONTRACTOR SHALL PROVIDE A SUBMITTAL PRIOR TO EACH SHUTDOWN. SUBMITTALS SHALL INCLUDE DETAILS OF THE LINE STOP AND VALVE INSTALLATION, INCLUDING BUT NOT LIMITED TO SUBCONTRACTOR QUALIFICATIONS, EQUIPMENT TO BE USED, TEST PIT INFORMATION REGARDING EXISTING WATER MAIN (SEE NOTE 3), METHODS OF INSTALLATION, SCHEDULING, AND TEMPORARY METHODS OF THRUST RESTRAINT WITH SUPPORTING CALCULATIONS STAMPED BY A PROFESSIONAL ENGINEER. THE SUBMITTALS SHALL BE SUBJECT TO THE REVIEW AND APPROVAL OF THE WARE WATER UTILITY AND THE ENGINEER.
2. ALL WATER SYSTEM WORK SHALL BE IN COMPLIANCE WITH THE TOWN OF WARE STANDARDS AND SPECIFICATIONS, UNLESS THE CONTRACT DOCUMENTS DIRECT OTHERWISE.
3. ALL NEW WATER MAIN PIPE, FITTINGS, AND VALVES SHALL BE PROVIDED WITH RESTRAINED JOINTS. ALL NEW FITTINGS AND VALVES SHALL BE PROVIDED WITH RESTRAINED MECHANICAL JOINTS. ALL NEW 12" D.I. WATER MAIN, INCLUDING THE NEW WATER MAIN LOCATED BENEATH THE BRIDGE AND THROUGH THE ABUTMENTS, SHALL BE RESTRAINED PUSH-ON JOINT PIPE (U.S. PIPE TR-FLEX PIPE, OR EQUAL - REFER TO SPECIAL PROVISIONS FOR ACCEPTABLE MATERIALS). EACH RESTRAINED PUSH-ON PIPE JOINT LOCATED BENEATH THE BRIDGE AND THROUGH THE ABUTMENTS SHALL BE FULLY EXTENDED AFTER ASSEMBLY AND PRIOR TO PRESSURIZATION IN ACCORDANCE WITH THE PIPE MANUFACTURERS RECOMMENDATIONS. EACH RESTRAINED PUSH-ON PIPE JOINT LOCATED WITHIN A SLEEVE SHALL BE FULLY EXTENDED AFTER ASSEMBLY AND INSERTION IN THE SLEEVE IN ACCORDANCE WITH THE PIPE MANUFACTURERS RECOMMENDATIONS.
4. CONTRACTOR SHALL ACHIEVE REQUIRED CHANGES IN THE WATER MAIN HORIZONTAL AND VERTICAL ALIGNMENT BY USING THE FITTINGS SHOWN ON THE DRAWINGS AND BY DEFLECTING PIPE JOINTS WITHIN THE ALLOWABLE LIMITS (REFER TO THE SPECIAL PROVISIONS). CONTRACTOR SHALL NOT PROVIDE ADDITIONAL FITTINGS TO THOSE SHOWN ON THE DRAWINGS UNLESS OTHERWISE APPROVED IN WRITING BY OWNER OR ENGINEER. FIELD CUTTING OF STANDARD PIPE LENGTHS SHALL BE CONDUCTED IN ACCORDANCE WITH THE SPECIAL PROVISIONS.
5. ALL NON-BURIED WATER MAIN LOCATED BENEATH THE BRIDGE SHALL BE PROVIDED WITH PRE-FORMED PIPE INSULATION AND RETAINIVE JACKET. REFER TO THE DETAILS ON THE BRIDGE DRAWINGS. ALL BURIED PIPE AND FITTINGS WITH LESS THAN FOUR FEET OF COVER SHALL BE PROVIDED WITH PRE-FORMED PIPE INSULATION AND RETAINIVE JACKET, WHICH SHALL BE RATED SUITABLE FOR BURIED APPLICATIONS. INSULATION SHALL EXTEND THROUGH ALL PIPE SLEEVES AND WALL SLEEVES.
6. ALL EXISTING WATER SERVICE LINES SHALL BE LOCATED PRIOR TO CONSTRUCTION.
7. ALL WATER MATERIALS SHALL BE SUBMITTED AND APPROVED BY THE TOWN OF WARE.

NOTES:

1. SEE BRIDGE PLANS FOR WATERLINE CROSSING.
2. ALL STORM PIPES TO AND FROM ABANDONED STRUCTURES TO BE ABANDONED

PHASE 1 CONSTRUCTION ——— OE ———
PHASE 2 CONSTRUCTION ——— OHW ———

WARE
PALMER ROAD (ROUTE 32) OVER WARE RIVER
BRIDGE NO. W-05-015

STATE	FED. AID PROJ. NO.	SHEET NO.	TOTAL SHEETS
MA	STP(BR-OFF)-003S(606)X	44	125
PROJECT FILE NO.	605126		

DRAINAGE & UTILITY PLANS

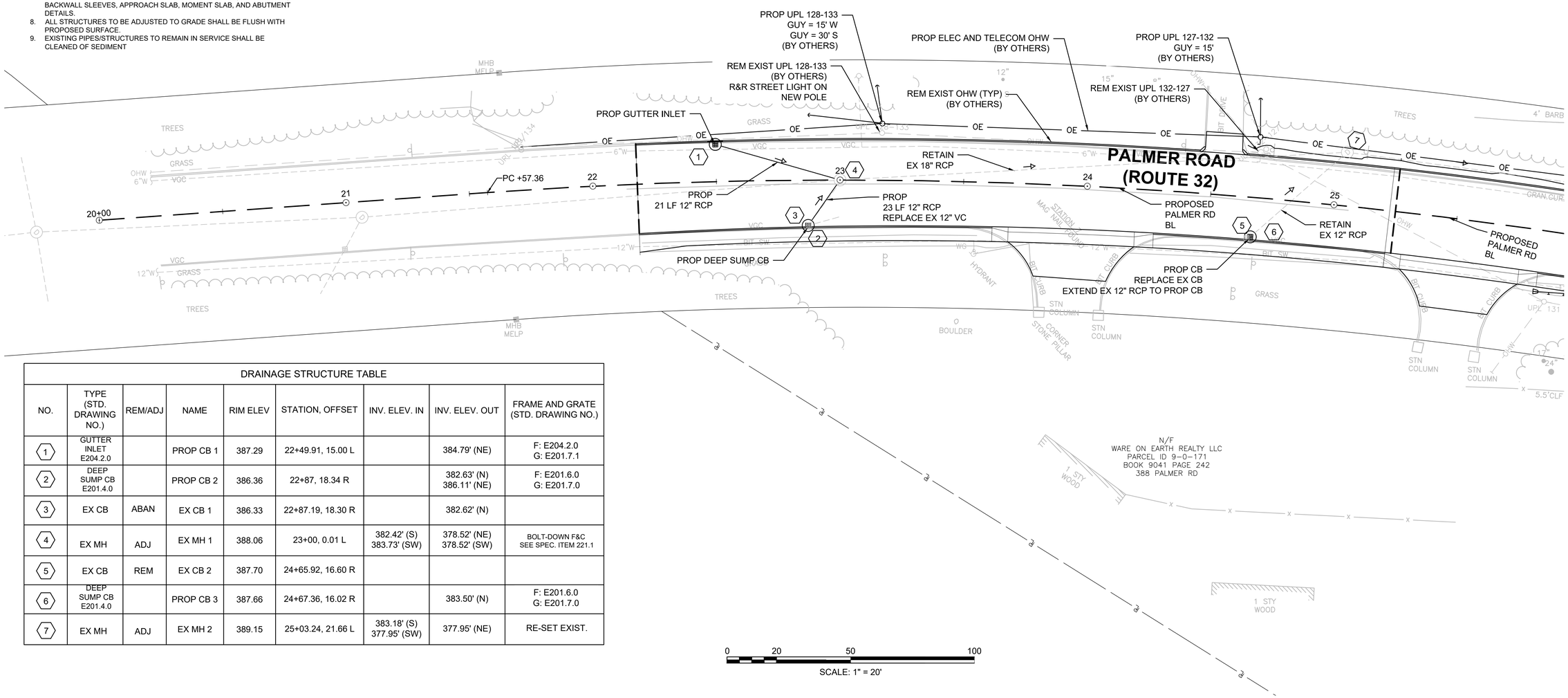

DRAINAGE STRUCTURE TABLE

NO.	TYPE (STD. DRAWING NO.)	REM/ADJ	NAME	RIM ELEV	STATION, OFFSET	INV. ELEV. IN	INV. ELEV. OUT	FRAME AND GRATE (STD. DRAWING NO.)
1	GUTTER INLET E204.2.0		PROP CB 1	387.29	22+49.91, 15.00 L		384.79' (NE)	F: E204.2.0 G: E201.7.1
2	DEEP SUMP CB E201.4.0		PROP CB 2	386.36	22+87, 18.34 R		382.63' (N) 386.11' (NE)	F: E201.6.0 G: E201.7.0
3	EX CB	ABAN	EX CB 1	386.33	22+87.19, 18.30 R		382.62' (N)	
4	EX MH	ADJ	EX MH 1	388.06	23+00, 0.01 L	382.42' (S) 383.73' (SW)	378.52' (NE) 378.52' (SW)	BOLT-DOWN F&C SEE SPEC. ITEM 221.1
5	EX CB	REM	EX CB 2	387.70	24+65.92, 16.60 R			
6	DEEP SUMP CB E201.4.0		PROP CB 3	387.66	24+67.36, 16.02 R		383.50' (N)	F: E201.6.0 G: E201.7.0
7	EX MH	ADJ	EX MH 2	389.15	25+03.24, 21.66 L	383.18' (S) 377.95' (SW)	377.95' (NE)	RE-SET EXIST.

CONTINUED ON SHEET NO. 45

605126_HD_UTILITY PLANS.DWG Plotted on 19-Aug-22 1:10 PM

WARE
PALMER ROAD (ROUTE 32) OVER WARE RIVER
BRIDGE NO. W-05-015

STATE	FED. AID PROJ. NO.	SHEET NO.	TOTAL SHEETS
MA	STP(BR-OFF)-003S(606)X	45	125
PROJECT FILE NO.	605126		

DRAINAGE & UTILITY PLANS

CONTINUED ON SHEET NO. 48

CONTINUED ON SHEET NO. 44

CONTINUED ON SHEET NO. 46

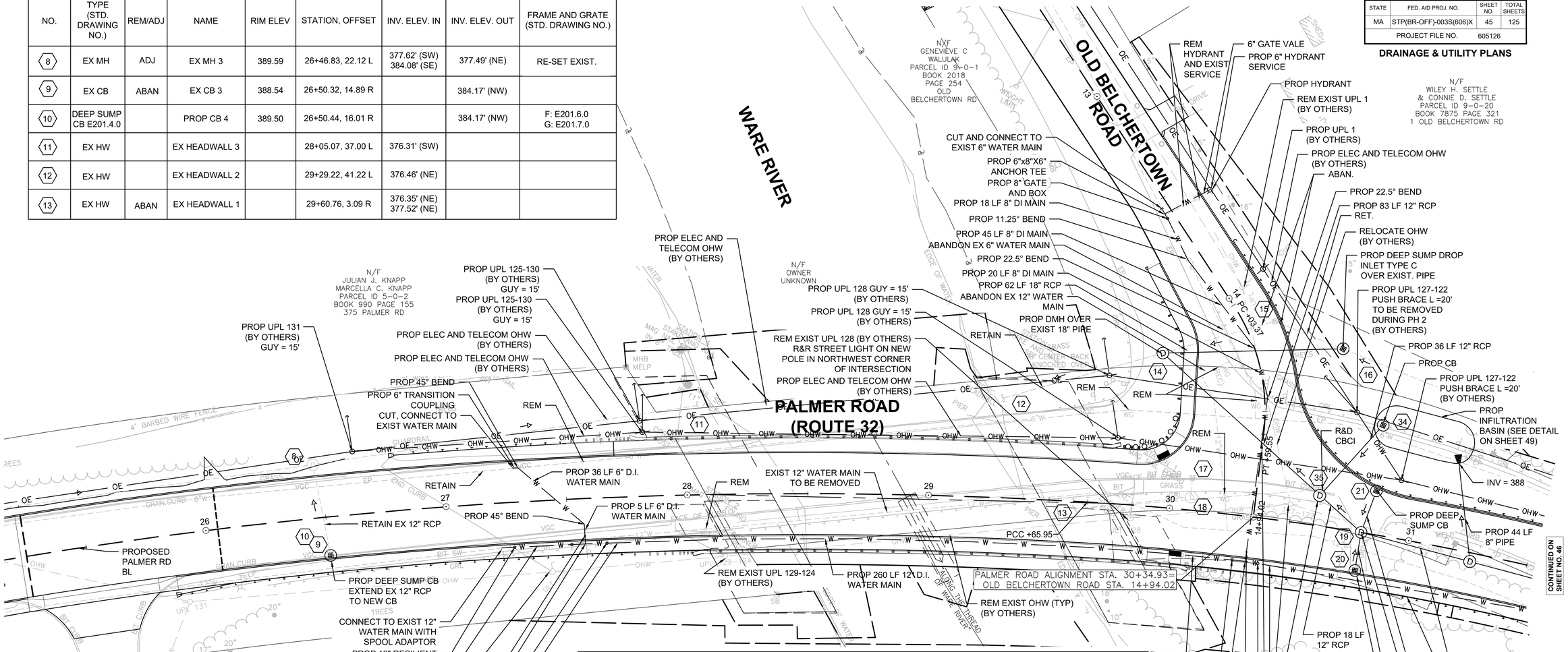

DRAINAGE STRUCTURE TABLE								
NO.	TYPE (STD. DRAWING NO.)	REM/ADJ	NAME	RIM ELEV	STATION, OFFSET	INV. ELEV. IN	INV. ELEV. OUT	FRAME AND GRATE (STD. DRAWING NO.)
8	EX MH	ADJ	EX MH 3	389.59	26+46.83, 22.12 L	377.62' (SW) 384.08' (SE)	377.49' (NE)	RE-SET EXIST.
9	EX CB	ABAN	EX CB 3	388.54	26+50.32, 14.89 R		384.17' (NW)	
10	DEEP SUMP CB E201.4.0		PROP CB 4	389.50	26+50.44, 16.01 R		384.17' (NW)	F: E201.6.0 G: E201.7.0
11	EX HW		EX HEADWALL 3		28+05.07, 37.00 L	376.31' (SW)		
12	EX HW		EX HEADWALL 2		29+29.22, 41.22 L	376.46' (NE)		
13	EX HW	ABAN	EX HEADWALL 1		29+60.76, 3.09 R	376.35' (NE) 377.52' (NE)		

DRAINAGE STRUCTURE TABLE								
NO.	TYPE (STD. DRAWING NO.)	REM/ADJ	NAME	RIM ELEV	STATION, OFFSET	INV. ELEV. IN	INV. ELEV. OUT	FRAME AND GRATE (STD. DRAWING NO.)
14	DMH E202.3.0		PROP MH 3	390.80	14+04.40, 35.39 R	UNKNOWN	UNKNOWN	
15	EX CB	ABAN	EX CB 7	385.61	14+16.43, 11.86 L	UNKNOWN	377.04' (SW)*	F: E202.6.0 G: E202.8.0
16	DEEP SUMP DROP INLET E201.4.0		PROP CB 12	386.72	14+31.70, 35.25 L	*	*	F: E203.1.0 G: E201.11.0
17	EX CB	ABAN	EX CB 4	389.84	30+08.15, 13.36 L		384.64' (SE)	
18	EX MH	ABAN	EX MH 4	390.59	30+08.57, 5.37 L	388.92' (NW)	388.92' (SW)	
19	DMH E202.4.0		PROP MH 4	394.11	30+80, 0.01 L	388.63' (N) 388.63' (S) 388.63' (E)	388.53' (W)	BOLT-DOWN F&C SEE SPEC. ITEM 221.1
20	DEEP SUMP CB E201.4.0		PROP CB 5	393.79	30+80, 16.00 R		388.79' (N)	F: E202.6.0 G: E201.7.1
21	DEEP SUMP CB E201.4.0		PROP CB 6	393.67	30+83.42, 18.06 L		388.79' (S)	F: E202.6.0 G: E201.7.0
34	DEEP SUMP CB E201.4.0		PROP CB	387.5	30+81.76, 45.34 L		384.50' (S)	F: E202.6.0 G: E201.11.0
35	DMH E202.4.0		PROP DMH		30+60.80, 12.53 L	384.1 (N) 387.55 (E)	384.0 (W)	BOLT-DOWN F&C SEE SPEC. ITEM 221.1

DRAINAGE TABLE NOTES:

* INTERCEPT EXISTING DRAIN PIPE

NOTES:

1. SEE BRIDGE PLANS FOR WATERLINE CROSSING.
2. ALL STORM PIPES TO AND FROM ABANDONED STRUCTURES TO BE ABANDONED
3. EXISTING PIPE CONNECTIONS/INVERTS SHALL BE VERIFIED PRIOR TO CONSTRUCTION

PHASE 1 CONSTRUCTION ——— OE ———

PHASE 2 CONSTRUCTION ——— OHW ———

605126_HD_UTILITY PLANS.DWG Plotted on 19-Aug-22 1:10 PM

WARE
PALMER ROAD (ROUTE 32) OVER WARE RIVER
BRIDGE NO. W-05-015

STATE	FED. AID PROJ. NO.	SHEET NO.	TOTAL SHEETS
MA	STP(BR-OFF)-003S(606)X	46	125
PROJECT FILE NO.	605126		

DRAINAGE & UTILITY PLANS

605126_HD_UTILITY PLANS.DWG Plotted on 19-Aug-22 1:10 PM

DRAINAGE STRUCTURE TABLE

NO.	TYPE (STD. DRAWING NO.)	REM/ADJ	NAME	RIM ELEV	STATION, OFFSET	INV. ELEV. IN	INV. ELEV. OUT	FRAME AND GRATE (STD. DRAWING NO.)
24	DMH E202.4.0		PROP MH 5	399.20	33+00, 0.10 L	393.72' (S) 393.72' (E) 393.72' (N)	393.62' (W)	BOLT-DOWN F&C SEE SPEC. ITEM 221.1
25	DEEP SUMP CB E201.4.0		PROP CB 7	398.88	33+00, 16.00 R		393.88' (N)	F: E201.6.0 G: E201.7.0
26	EX CB	ABAN	EX CB 10	397.34	33+03.12, 19.32 L			
27	DEEP SUMP CB E201.4.0		PROP CB 8	399.20	33+08.50, 16.00 L		393.88' (S)	F: E201.6.0 G: E201.7.1
28	DMH E202.4.0		PROP MH 6	409.18	35+10, 1.64 R	403.76' (N) 403.76' (S)	403.66' (W)	F: E201.6.0 G: E201.7.1
29	DEEP SUMP CB E201.4.0		PROP CB 10	408.96	35+10, 12.68 L		403.96' (S)	BOLT-DOWN F&C SEE SPEC. ITEM 221.1
30	DEEP SUMP CB E201.4.0		PROP CB 9	408.90	35+10, 15.97 R		403.90' (N)	F: E201.6.0 G: E201.7.0
36	DMH E202.4.0		PROP DMH		31+26.55, 3.62 R	389.8	389.7 (W) 389.5 (BASIN)	

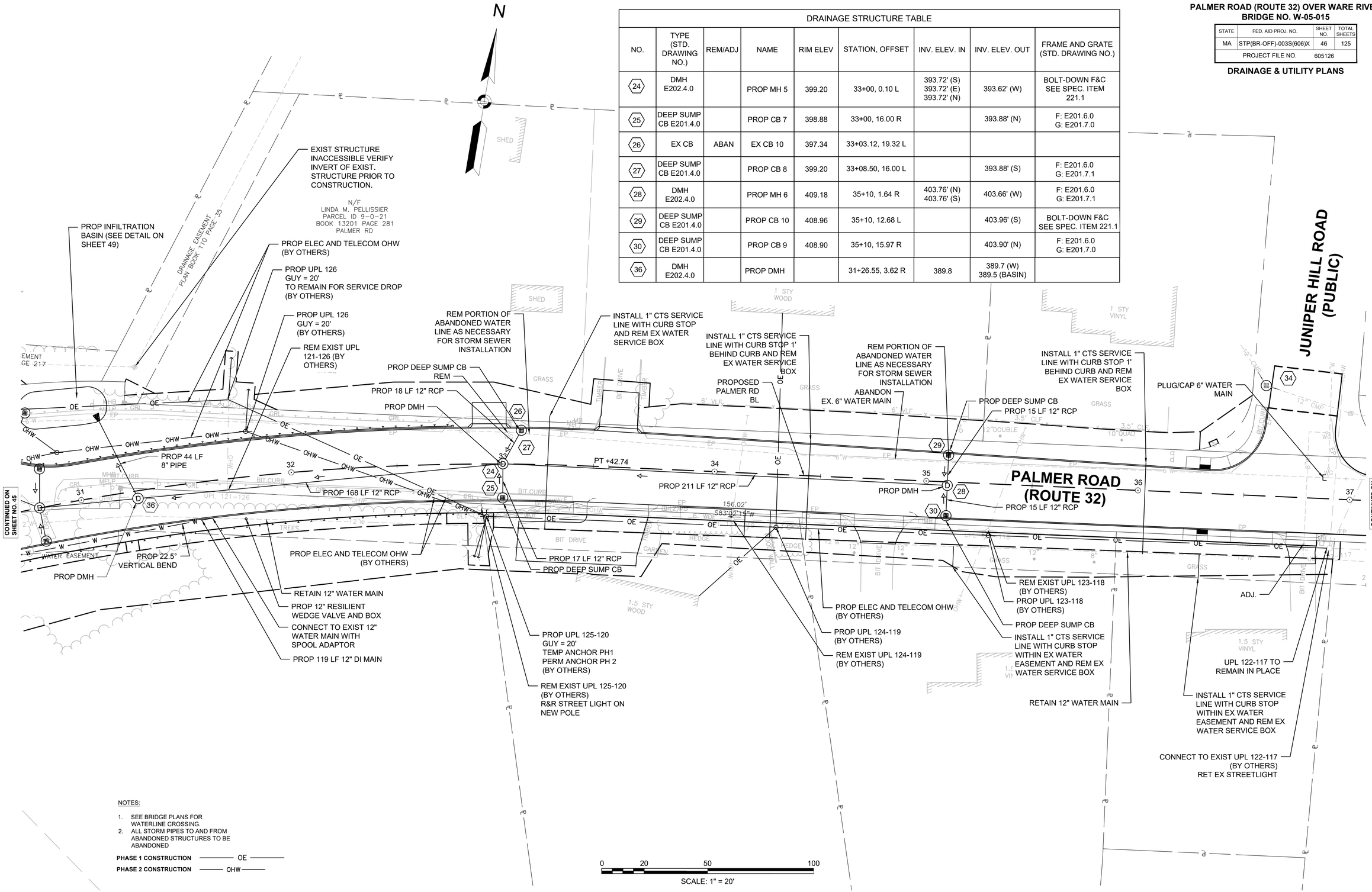

NOTES:

1. SEE BRIDGE PLANS FOR WATERLINE CROSSING.
2. ALL STORM PIPES TO AND FROM ABANDONED STRUCTURES TO BE ABANDONED

PHASE 1 CONSTRUCTION ——— OE ———

PHASE 2 CONSTRUCTION ——— OHW ———

NOTES:

1. SEE BRIDGE PLANS FOR WATERLINE CROSSING.
2. ALL STORM PIPES TO AND FROM ABANDONED STRUCTURES TO BE ABANDONED

PHASE 1 CONSTRUCTION —— OE ——

PHASE 2 CONSTRUCTION —— OHW ——

WARE
PALMER ROAD (ROUTE 32) OVER WARE RIVER
BRIDGE NO. W-05-015

STATE	FED. AID PROJ. NO.	SHEET NO.	TOTAL SHEETS
MA	STP(BR-OFF)-003S(606)X	47	125
PROJECT FILE NO.	605126		

DRAINAGE & UTILITY PLANS

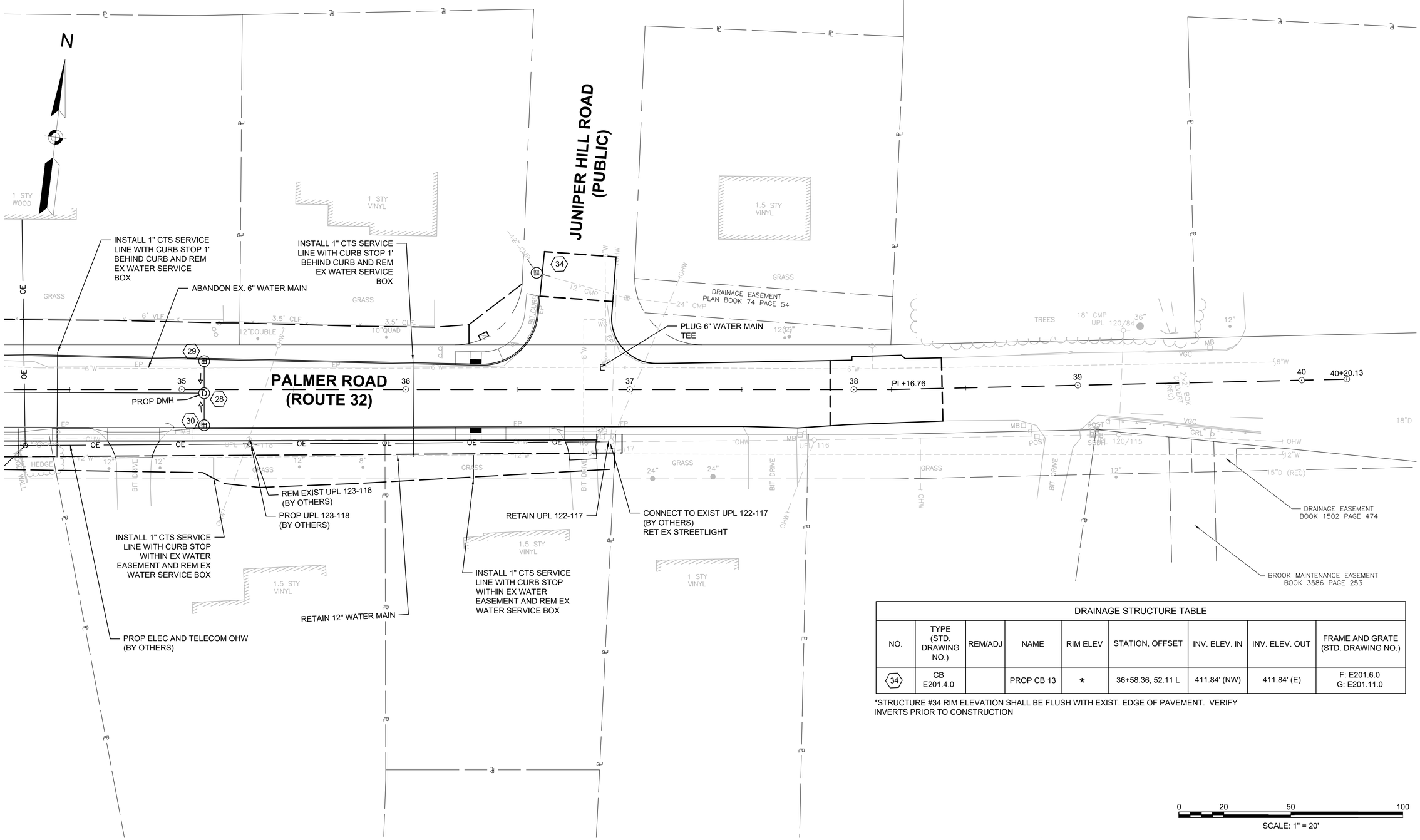

DRAINAGE STRUCTURE TABLE								
NO.	TYPE (STD. DRAWING NO.)	REM/ADJ	NAME	RIM ELEV	STATION, OFFSET	INV. ELEV. IN	INV. ELEV. OUT	FRAME AND GRATE (STD. DRAWING NO.)
34	CB E201.4.0		PROP CB 13	*	36+58.36, 52.11 L	411.84' (NW)	411.84' (E)	F: E201.6.0 G: E201.11.0

*STRUCTURE #34 RIM ELEVATION SHALL BE FLUSH WITH EXIST. EDGE OF PAVEMENT. VERIFY INVERTS PRIOR TO CONSTRUCTION

605126_HD_UTILITY PLANS.DWG Plotted on 19-Aug-22 1:10 PM

WARE
PALMER ROAD (ROUTE 32) OVER WARE RIVER
BRIDGE NO. W-05-015

STATE	FED. AID PROJ. NO.	SHEET NO.	TOTAL SHEETS
MA	STP(BR-OFF)-003S(606)X	48	125
PROJECT FILE NO.	605126		

DRAINAGE & UTILITY PLANS

NOTES:

1. SEE BRIDGE PLANS FOR WATERLINE CROSSING.
2. ALL STORM PIPES TO AND FROM ABANDONED STRUCTURES TO BE ABANDONED

PHASE 1 CONSTRUCTION —— OE ——
PHASE 2 CONSTRUCTION —— OHW ——

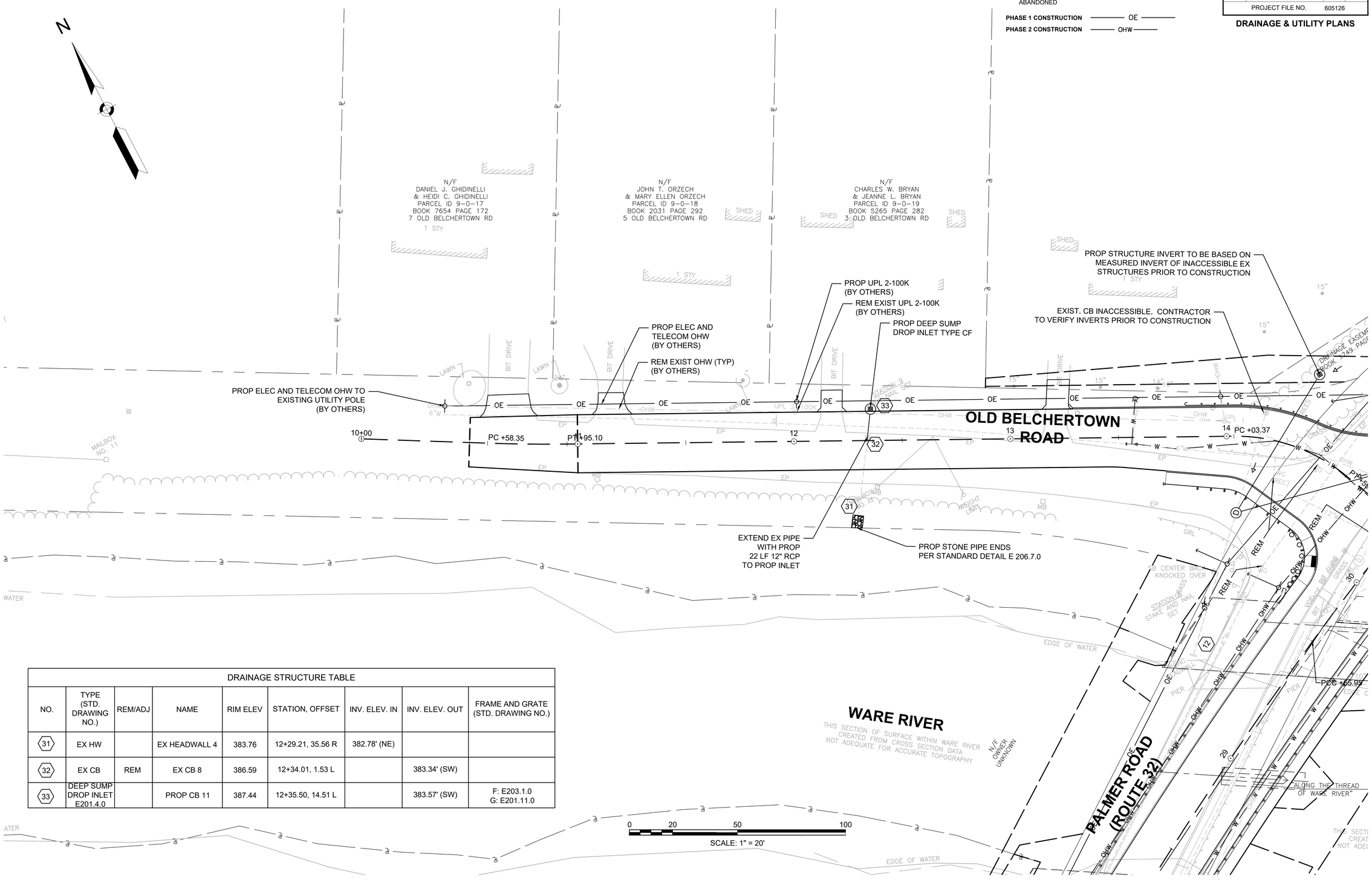

DRAINAGE STRUCTURE TABLE								
NO.	TYPE (STD. DRAWING NO.)	REM/ADJ	NAME	RIM ELEV	STATION, OFFSET	INV. ELEV. IN	INV. ELEV. OUT	FRAME AND GRATE (STD. DRAWING NO.)
31	EX HW		EX HEADWALL 4	383.76	12+29.21, 35.56 R	382.78' (NE)		
32	EX CB	REM	EX CB 8	386.59	12+34.01, 1.53 L		383.34' (SW)	
33	DEEP SUMP DROP INLET E201.4.0		PROP CB 11	387.44	12+35.50, 14.51 L		383.57' (SW)	F: E203.1.0 G: E201.11.0

CONTINUED ON SHEET NO. 45

605126_HD_UTILITY PLANS.DWG Plotted on 19-Aug-22 1:10 PM

STATE	FED. AID PROJ. NO.	SHEET NO.	TOTAL SHEETS
MA	STP(BR-OFF)-003S(606)X	49	125
PROJECT FILE NO.	605126		

CONSTRUCTION DETAILS

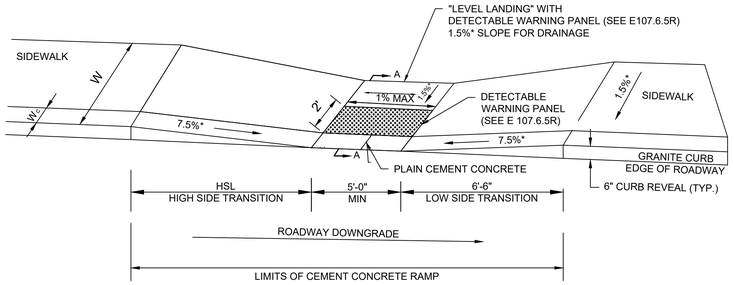

LEGEND

- HSL = HIGH SIDE TRANSITION LENGTH (SEE E 107.9.0R)
- W = SIDEWALK WIDTH
- WC = CURB WIDTH
- CC = CEMENT CONCRETE
- * = TOLERANCE FOR CONSTRUCTION ±0.5%

USEABLE SIDEWALK WIDTH PER AAB = W-WC
USEABLE SIDEWALK WITH PER AAB IS NOT TO BE LESS THAN 4'0"
SEE E 107.6.5R FOR DETAILS OF DETECTABLE WARNING PANEL

NOTE:

ROADWAY, GUTTER, AND FIRST 6" OF SIDEWALK TO BE ADJUSTED FOR FIELD CONDITIONS

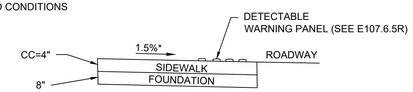

SECTION A-A

PEDESTRIAN CURB RAMP ON NARROW SIDEWALK WITH DETECTABLE WARNING PANEL (E107.2.1)

PCR #	ROADWAY ELEV. AT RAMP ℄	RAMP REFERENCE POINT			LENGTH OF PRIMARY RAMP	WIDTH OF SIDEWALK	WIDTH OF RAMP ENTRANCE	DEPTH OF LEVEL LANDING	TRANSITION (LOOKING AT FACE OF RAMP)		GUTTER SLOPE
		STREET	STATION	OFFSET					LEFT SIDE	RIGHT SIDE	
1	-	PALMER ROAD	30+04.6	17.0' RT	-	6.0'	5.0'	5.5'	9.0'	6.5'	1.02%
2	-	PALMER ROAD	29+96.5	19.3' LT	-	6.0'	5.0'	5.5'	6.5'	6.5'	0.00%
3	-	PALMER ROAD	36+31.17	16.7' RT	-	6.0'	5.0'	5.5'	11.0'	6.5'	2.91%
4	-	PALMER ROAD	36+31.14	10.9' LT	-	6.0'	5.0'	5.5'	6.5'	7.66'	0.91%

PEDESTRIAN CURB RAMPS ON NARROW SIDEWALK
WITH DETECTABLE WARNING PANEL (E107.2.1)
NOT TO SCALE

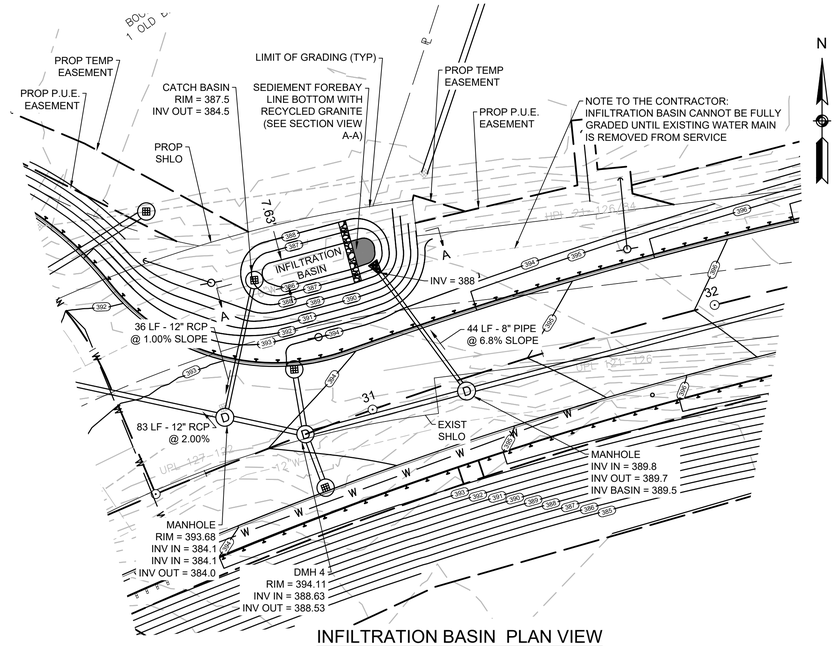

INFILTRATION BASIN PLAN VIEW
1" = 20'

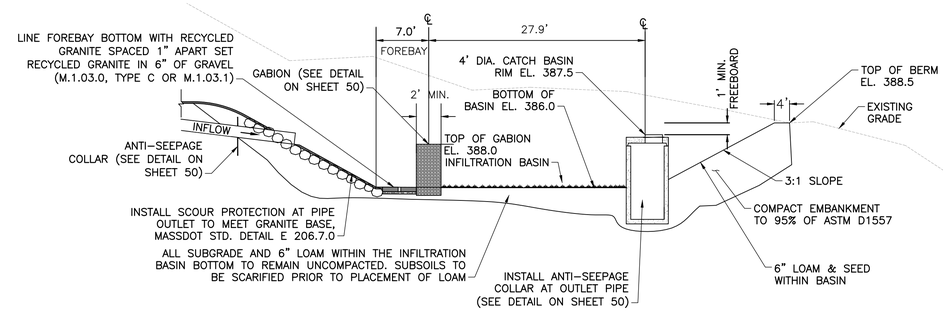

INFILTRATION BASIN SECTION A-A
NOT TO SCALE

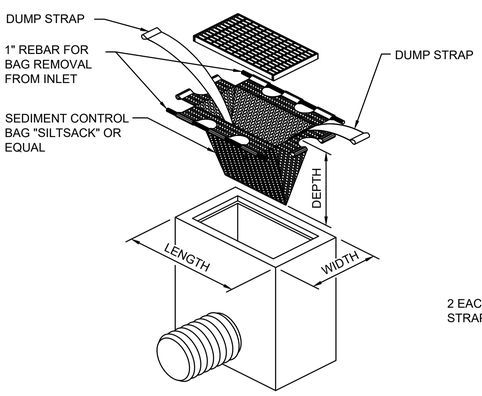

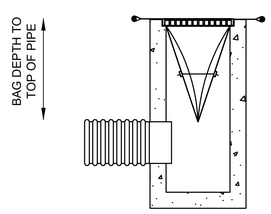

INSTALLATION DETAIL

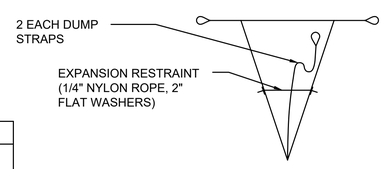

BAG DETAIL

CB STYLE	LENGTH	WIDTH	DEPTH
E201.4.0	24"	24"	VARIES
EXISTING	VARIES	VARIES	VARIES

NOTES:

1. THE DIMENSION CHART ABOVE IS FOR STANDARD CATCH BASINS AND INLETS ONLY. THE CONTRACTOR IS RESPONSIBLE FOR PROVIDING THE CORRECT SIZE DEVICE FOR EACH INLET.
2. FOR NON-STANDARD CATCH BASINS AND INLETS, THE CONTRACTOR SHALL MEASURE DIMENSIONS IN THE FIELD AND ORDER THE APPROPRIATE SIZE(S).
3. THE INLET SEDIMENT CONTROL DEVICE SHALL BE OF HIGH FLOW DESIGN (200 GAL/MIN/FT), AS PER THE MANUFACTURER'S SPECS.
4. THE SEDIMENT CONTROL DEVICE SHALL BE INSPECTED DAILY BY THE CONTRACTOR AND MAINTAINED A MINIMUM ONCE PER MONTH OR WITHIN THE 48 HOURS FOLLOWING A STORM EVENT. FILTER SHALL BE CLEANED IN A MANNER WHICH ENSURES THAT ALL SEDIMENT REMAINS ON SITE.
5. SUBSTITUTION OF A SHEET OF FILTER FABRIC PLACED OVER THE OPENING OF THE INLET IS NOT APPROVED.
6. RECESSED CURB INLET CATCH BASINS MUST BE BLOCKED WHEN USING FILTER FABRIC INLET SACKS, SIZE OF FILTER INLET SACK TO BE DETERMINED BY MANUFACTURER.
7. THE FILTER SHALL BE REPLACED OR CLEANED WHEN THE BAG BECOMES HALF FULL.

INLET SEDIMENT CONTROL DEVICE - SILT SACK
NOT TO SCALE

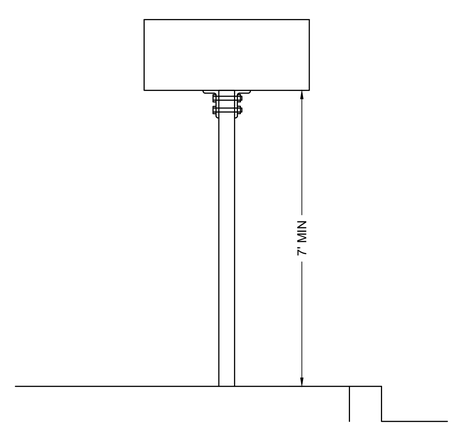

SIDEWALK OBSTRUCTION DETAIL

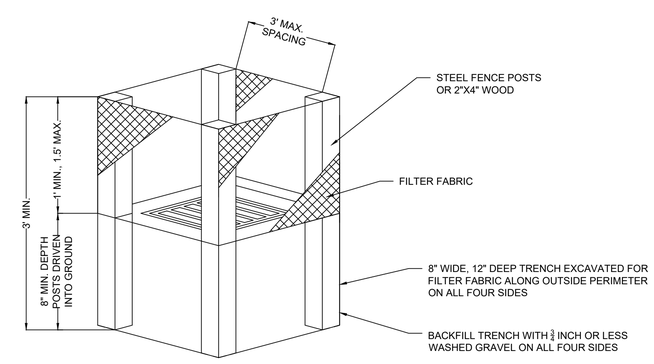

FABRIC DROP INLET PROTECTION
NOT TO SCALE

605126_HD_DETAILS.DWG Plotted on 19-Aug-22 1:10 PM

STATE	FED. AID PROJ. NO.	SHEET NO.	TOTAL SHEETS
MA	STP(BR-OFF)-003S(606)X	50	125
PROJECT FILE NO.	605126		

CONSTRUCTION DETAILS

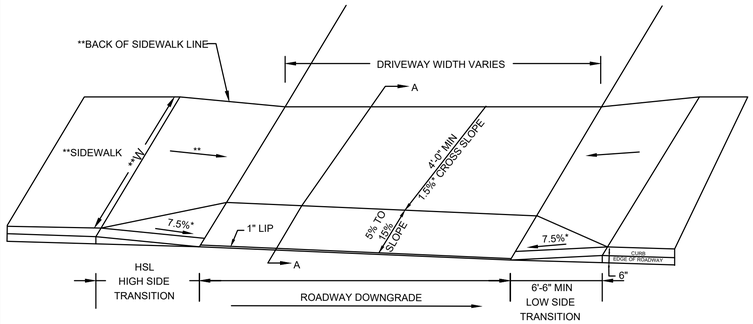

SIDEWALK THROUGH DRIVEWAYS WITHOUT CURB RETURNS (E 107.7.0)
NOT TO SCALE

LEGEND
* = TOLERANCE FOR CONSTRUCTION ±0.5%
** = DWY 13 DOES NOT HAVE SIDEWALK OR TRANSITION PANEL ON THE LEFT SIDE.

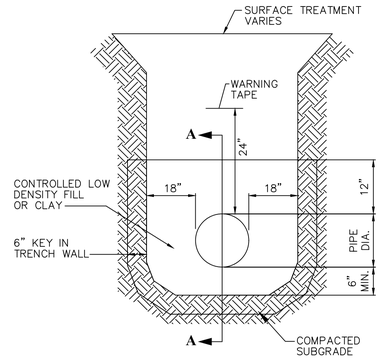

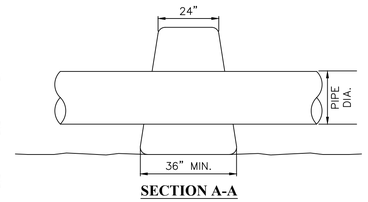

SECTION A-A

ANTI-SEEPAGE COLLAR
NOT TO SCALE

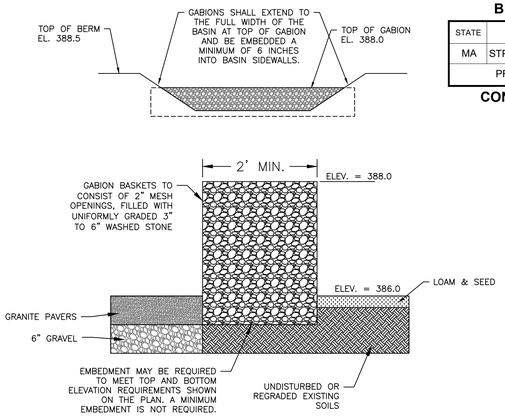

GABION
NOT TO SCALE

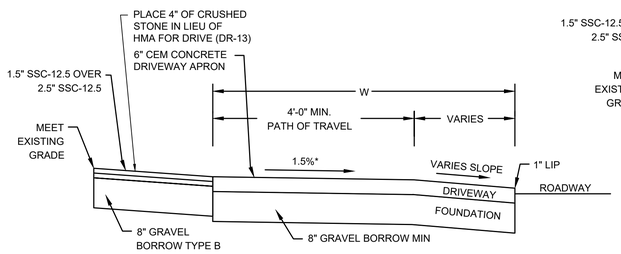

SECTION A-A (HMA DRIVEWAY)

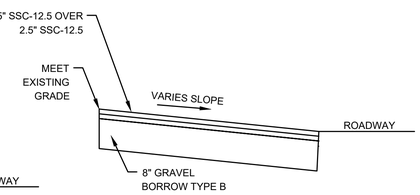

SECTION B-B (HMA DRIVEWAY NO WALK)

SIDEWALK THROUGH DRIVEWAYS WITHOUT CURB RETURNS (107.7.0)								
DRIVEWAY #	DRIVEWAY REFERENCE POINT			ROADWAY ELEV. AT DRIVEWAY CL	WIDTH OF OPENING	TRANSITION		GUTTER SLOPE
	STREET	STATION	OFFSET			LEFT SIDE	RIGHT SIDE	
1	PALMER ROAD	23+94.52	17.5' RT	387.39	52.5'	7.66'	6.5'	0.56%
3	PALMER ROAD	25+53.45	17.5' RT	388.61	48.2'	7.66'	6.5'	1.00%
5	PALMER ROAD	33+55.16	17.0' RT	401.08	29.0'	15.0'	6.5'	4.65%
6	PALMER ROAD	34+78.46	17'0' RT	407.33	23.2'	15.0'	6.5'	5.18%±
7	PALMER ROAD	36+78.08	17.0' RT	414.58	14.5'	-	6.5'	1.8%±
13	PALMER ROAD	34+21.25	17.0' RT	404.58	12.0'	15	6.5'	4.9%±

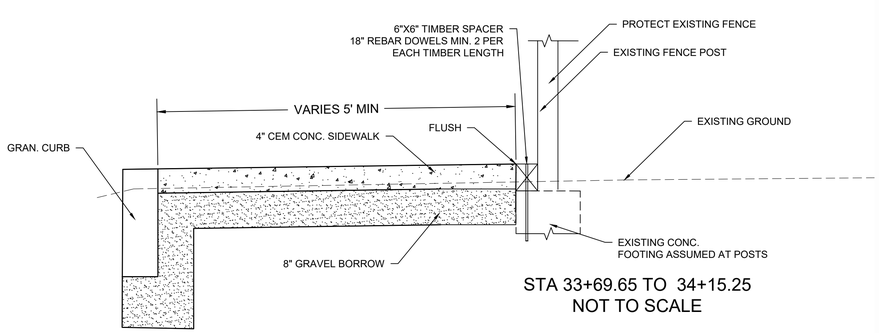

STA 33+69.65 TO 34+15.25
NOT TO SCALE

SIDEWALK DETAIL AT EXIST. FENCE
STA 33+69.65 TO 34+15.25
NOT TO SCALE

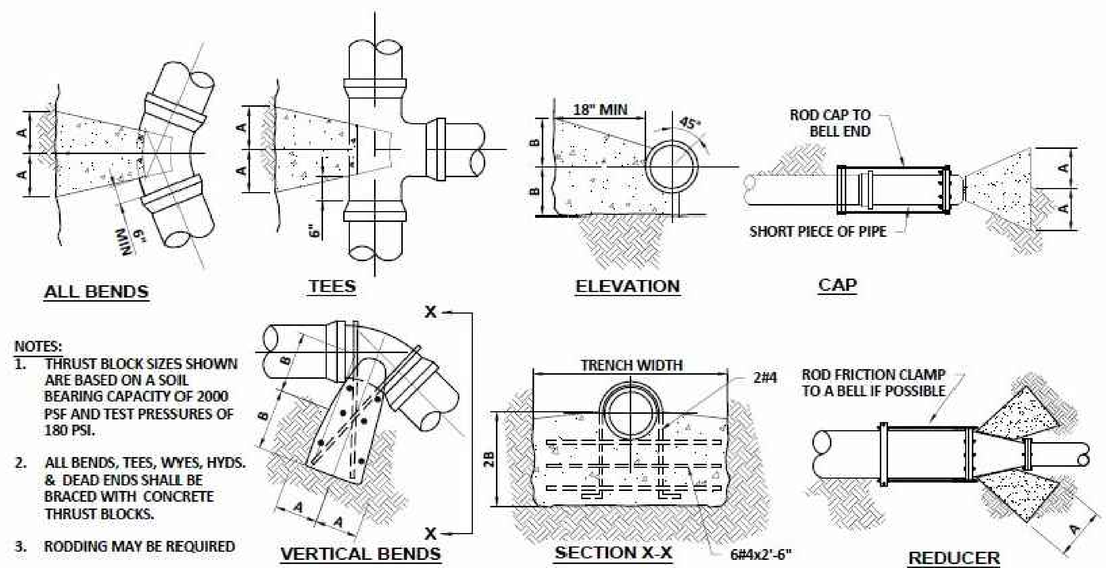

NOTES:
1. THRUST BLOCK SIZES SHOWN ARE BASED ON A SOIL BEARING CAPACITY OF 2000 PSF AND TEST PRESSURES OF 180 PSI.
2. ALL BENDS, TEES, WYES, HYDS. & DEAD ENDS SHALL BE BRACED WITH CONCRETE THRUST BLOCKS.
3. RODDING MAY BE REQUIRED

PIPE SIZE	90° BEND		45° BEND		22 1/2° BEND		11 1/4° BEND		TEE		VERTICAL BEND (DOWN)		PLUG		REDUCER	
	A	B	A	B	A	B	A	B	A	B	A	B	A	B	A	B
4"	15"	12"	12"	9"	9"	6"	6"	6"	12"	12"	24"	21"	12"	12"	12"	12"
6"	15"	12"	12"	9"	9"	6"	6"	6"	12"	12"	24"	21"	12"	12"	12"	12"
8"	20"	15"	14"	12"	9"	9"	9"	6"	18"	12"	33"	24"	14"	14"	18"	12"
10"	21"	21"	18"	15"	15"	9"	9"	9"	20"	18"	40"	27"	16"	16"	20"	18"
12"	27"	24"	23"	15"	15"	12"	12"	9"	25"	18"	48"	30"	18"	18"	25"	18"
16"	37"	30"	30"	21"	21"	15"	13"	12"	32"	24"	57"	36"	22"	22"	32"	24"

THRUST BLOCKS
NTS

605126_HD_DETAILS.DWG Plotted on 19-Aug-22 1:10 PM

WARE
PALMER ROAD (ROUTE 32) OVER WARE RIVER
BRIDGE NO. W-05-015

STATE	FED. AID PROJ. NO.	SHEET NO.	TOTAL SHEETS
MA	STP(BR-OFF)-003S(606)X	51	125
PROJECT FILE NO.	605126		

MODIFIED TRANSITION TO BRIDGE RAIL DETAIL
SHEET 1 OF 2

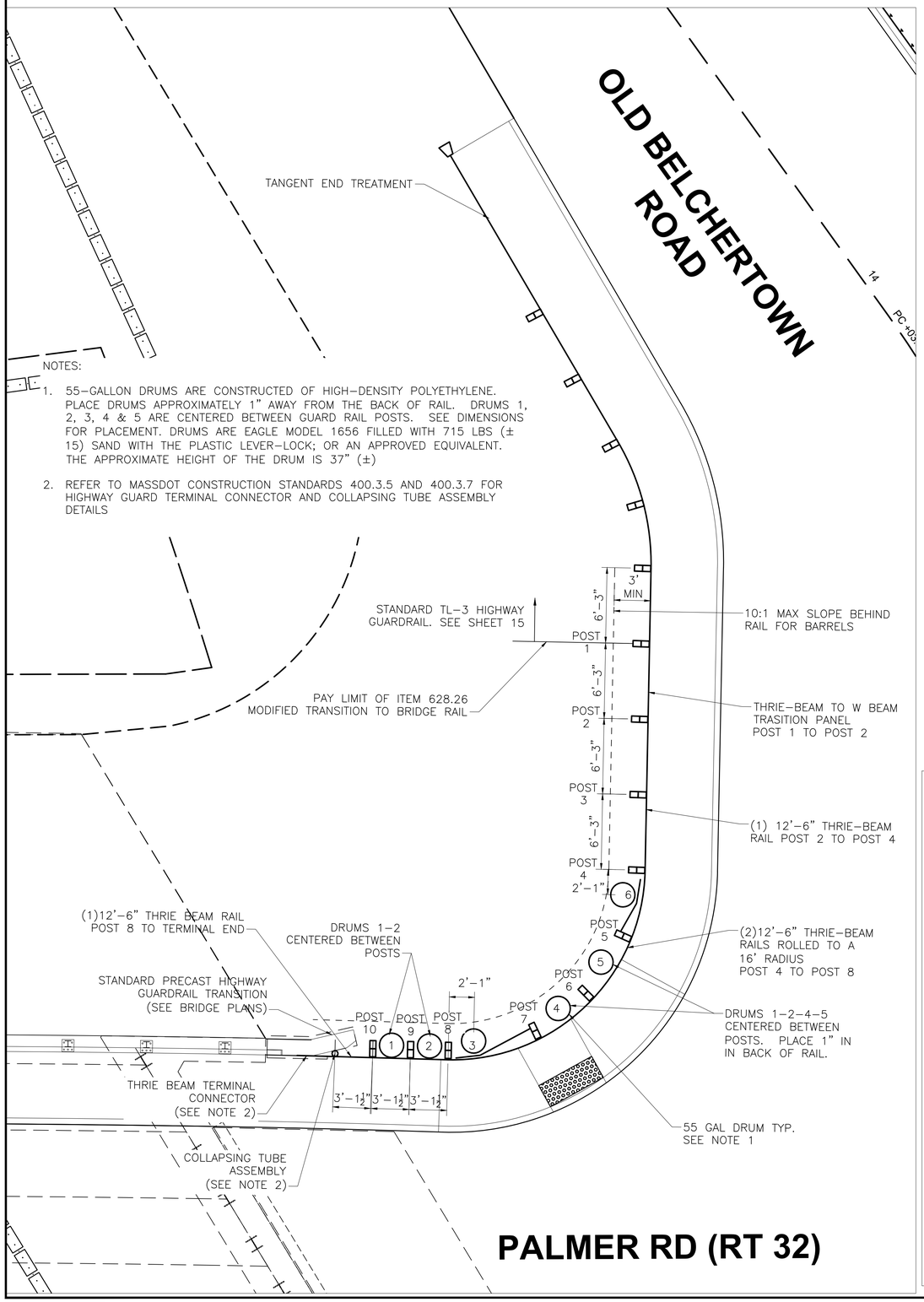

NOTES:

1. 55-GALLON DRUMS ARE CONSTRUCTED OF HIGH-DENSITY POLYETHYLENE. PLACE DRUMS APPROXIMATELY 1" AWAY FROM THE BACK OF RAIL. DRUMS 1, 2, 3, 4 & 5 ARE CENTERED BETWEEN GUARD RAIL POSTS. SEE DIMENSIONS FOR PLACEMENT. DRUMS ARE EAGLE MODEL 1656 FILLED WITH 715 LBS (± 15) SAND WITH THE PLASTIC LEVER-LOCK; OR AN APPROVED EQUIVALENT. THE APPROXIMATE HEIGHT OF THE DRUM IS 37" (±)
2. REFER TO MASSDOT CONSTRUCTION STANDARDS 400.3.5 AND 400.3.7 FOR HIGHWAY GUARD TERMINAL CONNECTOR AND COLLAPSING TUBE ASSEMBLY DETAILS

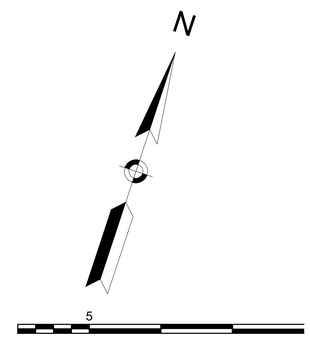

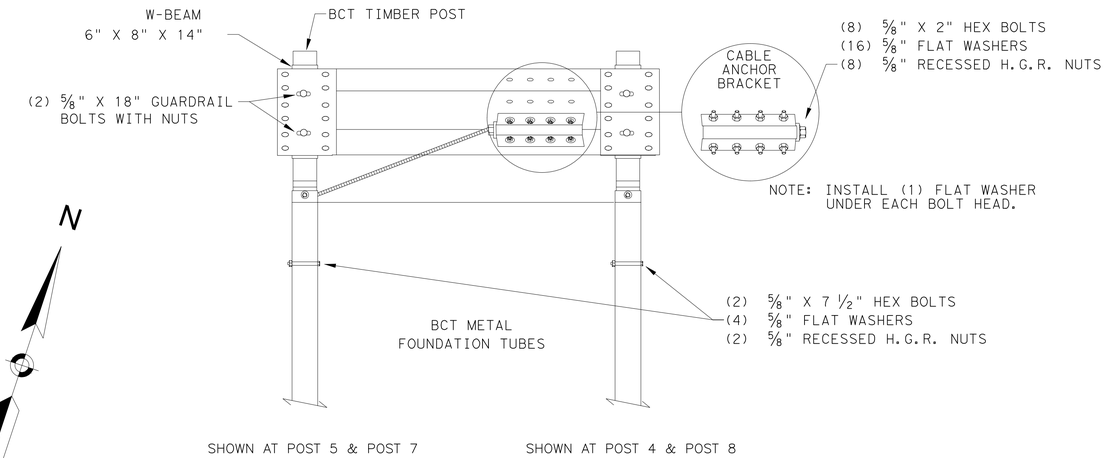

SHOWN AT POST 5 & POST 7 SHOWN AT POST 4 & POST 8

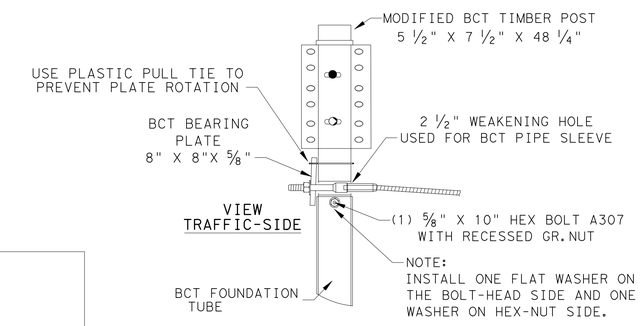

SHOWN AT POST 5 & POST 7

BCT TIMBER POST WITH METAL FOUNDATION TUBE

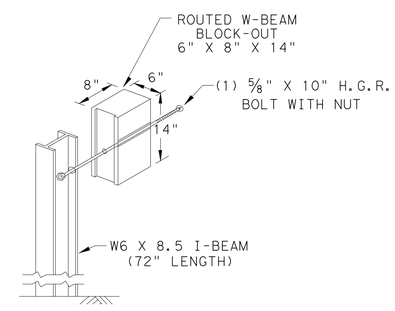

POST 1&10

INSTALLATION DETAIL
ROUTED WOOD BLOCK-OUT WITH WIDE FLANGE STEEL POST

NOTE:

REFER TO MASSDOT CONSTRUCTION STANDARD 400.1.4 FOR OFFSET BLOCK DETAILS

POSTS 1&10	USE: 14" W-BEAM TIMBER OFFSET BLOCK FOR USE WITH STEEL POSTS
POSTS 2-3	USE: 22" THRIE BEAM TIMBER OFFSET BLOCK
POSTS 4-9	USE: 14" W-BEAM TIMBER OFFSET BLOCK FOR USE WITH TIMBER POSTS

605126_HD_DETAILS.DWG Plotted on 19-Aug-22 1:10 PM

WARE
PALMER ROAD (ROUTE 32) OVER WARE RIVER
BRIDGE NO. W-05-015

STATE	FED. AID PROJ. NO.	SHEET NO.	TOTAL SHEETS
MA	STP(BR-OFF)-003S(606)X	52	125
PROJECT FILE NO.	605126		

MODIFIED TRANSITION TO BRIDGE RAIL DETAIL
SHEET 2 OF 2

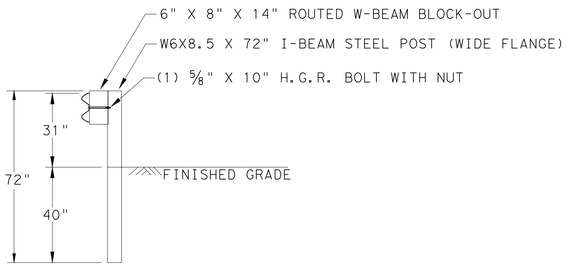

72" LONG
I-BEAM (WIDE FLANGE) STEEL POST 1

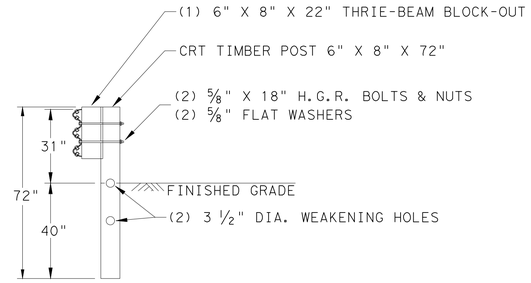

CRT TIMBER POSTS 2-3

NOTE:
SEE SPECIAL APPLICATION NOTES ON SHEET 3 OF 3.
CRT POST WILL REQUIRE AN ADDITIONAL 3/4" HOLE
TO ACCOMMODATE THE 22" LONG BLOCKOUT.

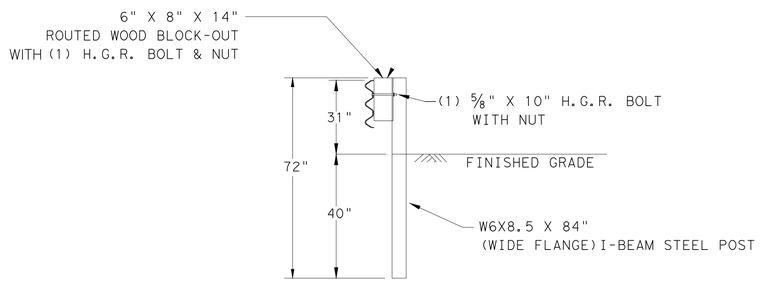

84" LONG
I-BEAM WIDE FLANGE STEEL POST 10

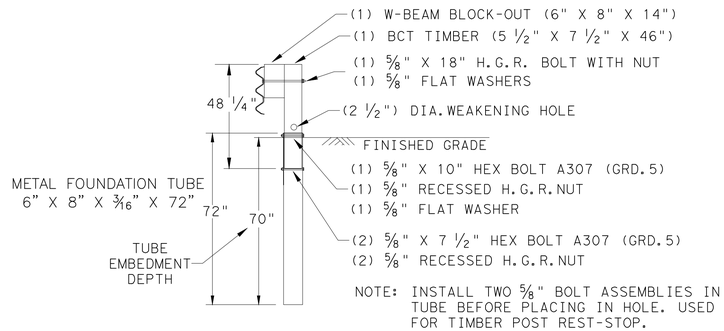

NOTE: INSTALL TWO 5/8" BOLT ASSEMBLIES IN TUBE BEFORE PLACING IN HOLE. USED FOR TIMBER POST REST-STOP.

BCT TIMBER POSTS WITH METAL FOUNDATION TUBES
4-5-6-7-8-9

GENERAL NOTES

1. STEEL POSTS ARE NOT PERMITTED AT CRT OR BCT POST POSITIONS.
2. ALL GUARDRAIL ELEMENTS SHALL MEET THE REQUIREMENTS OF SECTION M8.07.0 "GUARDRAIL" EXCEPT AS MODIFIED ON THE PLANS. THE CONTRACTOR MAY FURNISH RAIL ELEMENTS OF 12 1/2" OR 25 FOOT NOMINAL LENGTHS.
3. BUTTON HEAD "POST" BOLTS (ASTM A307) SHALL BE OF SUFFICIENT LENGTH TO EXTEND THROUGH THE FULL THICKNESS OF THE NUT (ASTM A563) AND TYPE A (1 3/4: O.D.) WASHER AND NOT MORE THAN 1" BEYOND IT. BUTTON HEAD "SPLICE" BOLTS (ASTM A307) ARE 5/8" X 1 1/4" OR 2" LONG AT TRIPLE RAIL SPICES WITH A DOUBLE RECESSED NUT (ASTM A563).
4. ALL STEEL COMPONENTS AND HARDWARE SHALL BE GALVANIZED IN ACCORDANCE WITH SECTION M8.07.0 "GUARDRAIL".
5. GUARDRAIL POSTS SHALL NOT BE SET IN CONCRETE, OF ANY DEPTH.
6. ALL MATERIAL AND WORK WITHIN PAY LIMITS SHOWN IS INCLUSIVE TO ITEM 628.26 MODIFIED TRANSITION TO BRIDGE RAIL, INCLUDING, BUT NOT LIMITED TO FOUNDATIONS, GRADING, THRIE BEAM RAIL, SAND DRUMS, AND OTHER PARTS.
7. ALL CABLE ASSEMBLIES SHOULD BE TAUT AFTER INSTALLATION. WHEN CABLES ARE MANIPULATED BY HAND THE CABLES SHOULD NOT MOVE MORE THAN 1" IN ANY DIRECTION PERPENDICULAR TO THE CABLE.
8. THE DRUMS ARE EAGLE MODEL 1656 55-GALLON HDPE FILLED WITH 715 LB (+/-15) SAND WITH THE PLASTIC LEVER-LOCK; OR AN APPROVED EQUIVALENT. THE APPROXIMATE HEIGHT OF THE DRUM IS 37" (+/-).
9. TESTED TO MASH WITH A 3:1 SLOPE OR SHALLOWER IS PREFERABLE IN THE LIMITS OF THE TOP AND BOTTOM OF THE SLOPE AS SHOWN IN THE PLAN VIEW. IF FIELD CONDITIONS REQUIRE A STEEPER SLOPE, THIS MAY BE ALLOWABLE UP TO A 2:1 SLOPE. AS DIRECTED BY THE ENGINEER.

SPECIAL APPLICATION NOTES

1. THE SYSTEM REQUIRES A MINIMUM 3' WIDE (WORK ZONE) DIRECTLY BEHIND THE GUARDRAIL SYSTEM, WITH A SLOPE A 1V:10H, FROM THERE A 3:1 SLOPE IS RECOMMENDED.

2. NOTE FOR INSTALLER: THE TWO (2) CRT POSTS, AT POST LOCATIONS 2&3, WILL REQUIRE THE FOLLOWING FIELD ADJUSTMENT. USING A 3/4" X 10" LONG SPADE BIT DRILL (1) ADDITIONAL HOLE 7-7/8" DIRECTLY BELOW THE EXISTING TOP HOLE TO ACCOMMODATE THE HARDWARE FOR THE 22" LONG BLOCKOUT.

   OPTION FOR ADDITIONAL 3/4" HOLE. THE 22" LONG BLOCKOUT IS MANUFACTURED WITH TWO 3/4" DRILLED HOLES FOR THE POST HARDWARE, THEREFORE THE BLOCKOUT CAN BE USED AS A TEMPLATE GUIDE FOR THE BOTTOM 3/4" HOLE. AFTER INSTALLING THE CRT POST USE THE TOP HOLE TO MOUNT THE 22" LONG BLOCKOUT TO POST, USE THE BLOCKOUT'S PRE-DRILLED HOLE AS A GUIDE FOR THE BOTTOM 3/4" HOLE.

605126_HD_DETAILS.DWG Plotted on 19-Aug-22 1:10 PM

WARE
PALMER ROAD (ROUTE 32) OVER WARE RIVER
BRIDGE NO. W-05-015

STATE	FED. AID PROJ. NO.	SHEET NO.	TOTAL SHEETS
MA	STP(BR-OFF)-003S(606)X	53	125
PROJECT FILE NO.	605126		

WHEELCHAIR RAMP DETAILS
SHEET 1 OF 3

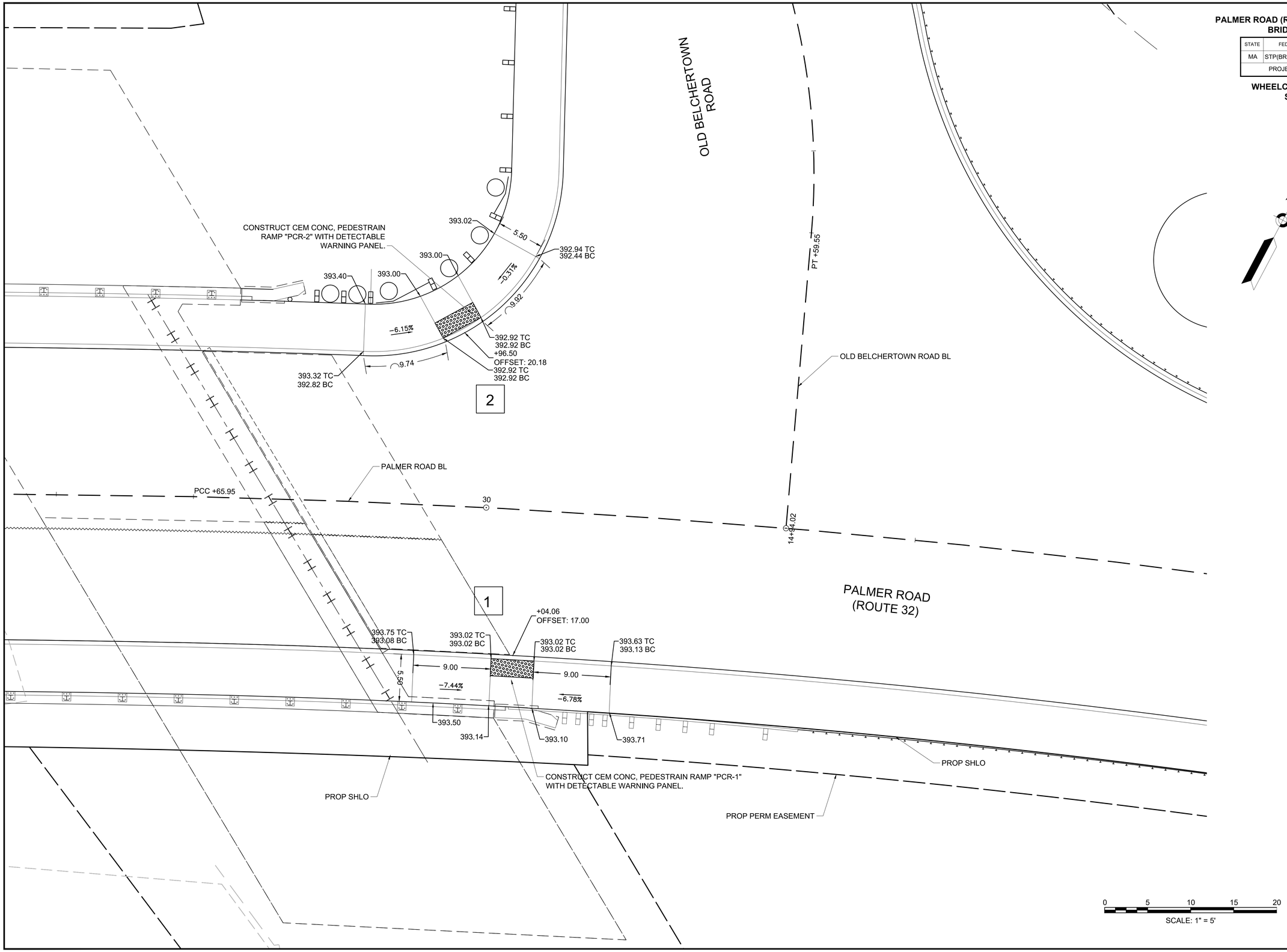

605126_HD_CURB RAMP DETAILS.DWG Plotted on 19-Aug-22 1:10 PM

WARE
PALMER ROAD (ROUTE 32) OVER WARE RIVER
BRIDGE NO. W-05-015

STATE	FED. AID PROJ. NO.	SHEET NO.	TOTAL SHEETS
MA	STP(BR-OFF)-003S(606)X	54	125
PROJECT FILE NO.	605126		

WHEELCHAIR RAMP DETAILS
SHEET 2 OF 3

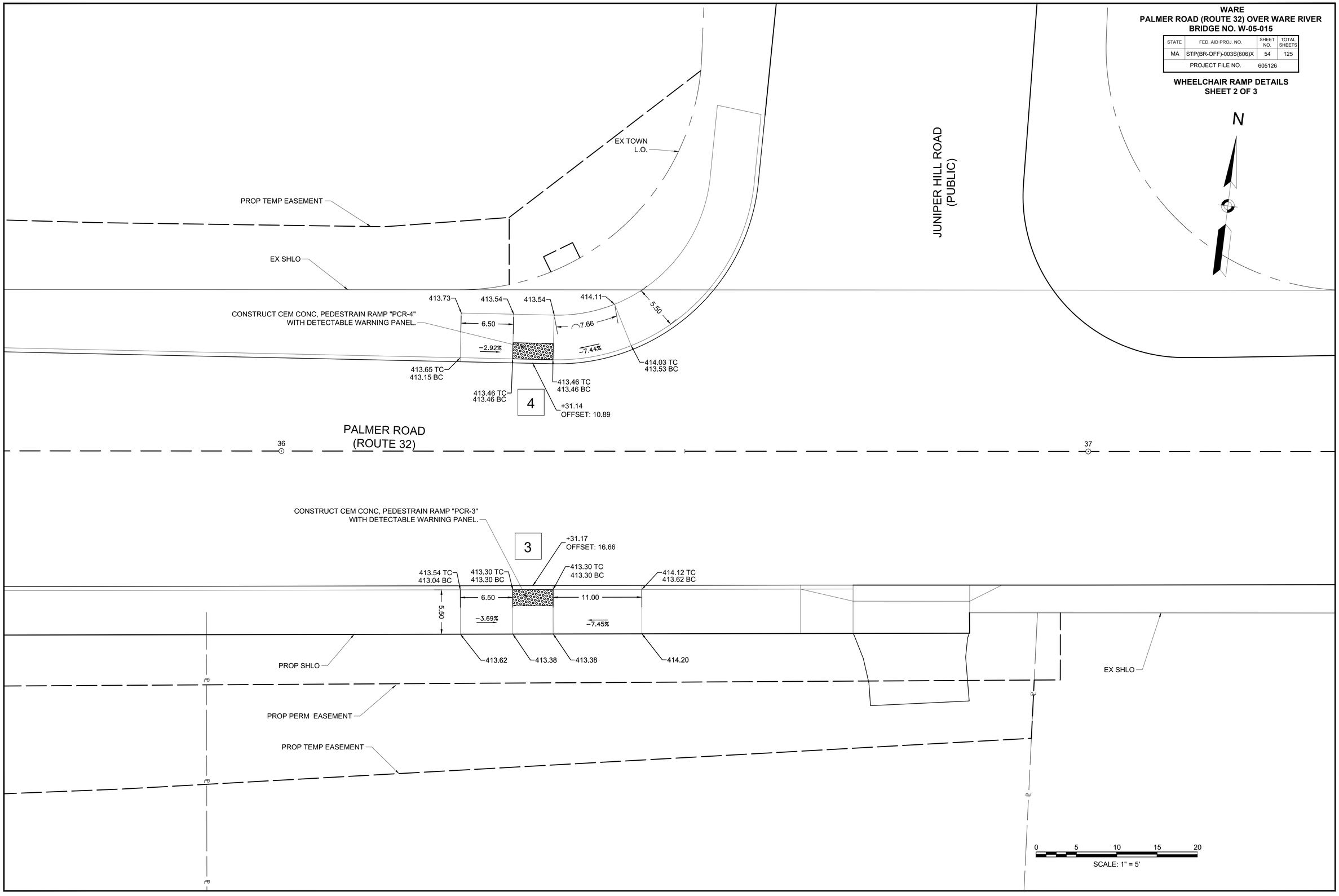

605126_HD_CURB RAMP DETAILS.DWG Plotted on 19-Aug-22 1:10 PM

WARE
PALMER ROAD (ROUTE 32) OVER WARE RIVER
BRIDGE NO. W-05-015

STATE	FED. AID PROJ. NO.	SHEET NO.	TOTAL SHEETS
MA	STP(BR-OFF)-003S(606)X	55	125
PROJECT FILE NO.	605126		

WHEELCHAIR RAMP DETAILS
SHEET 3 OF 3

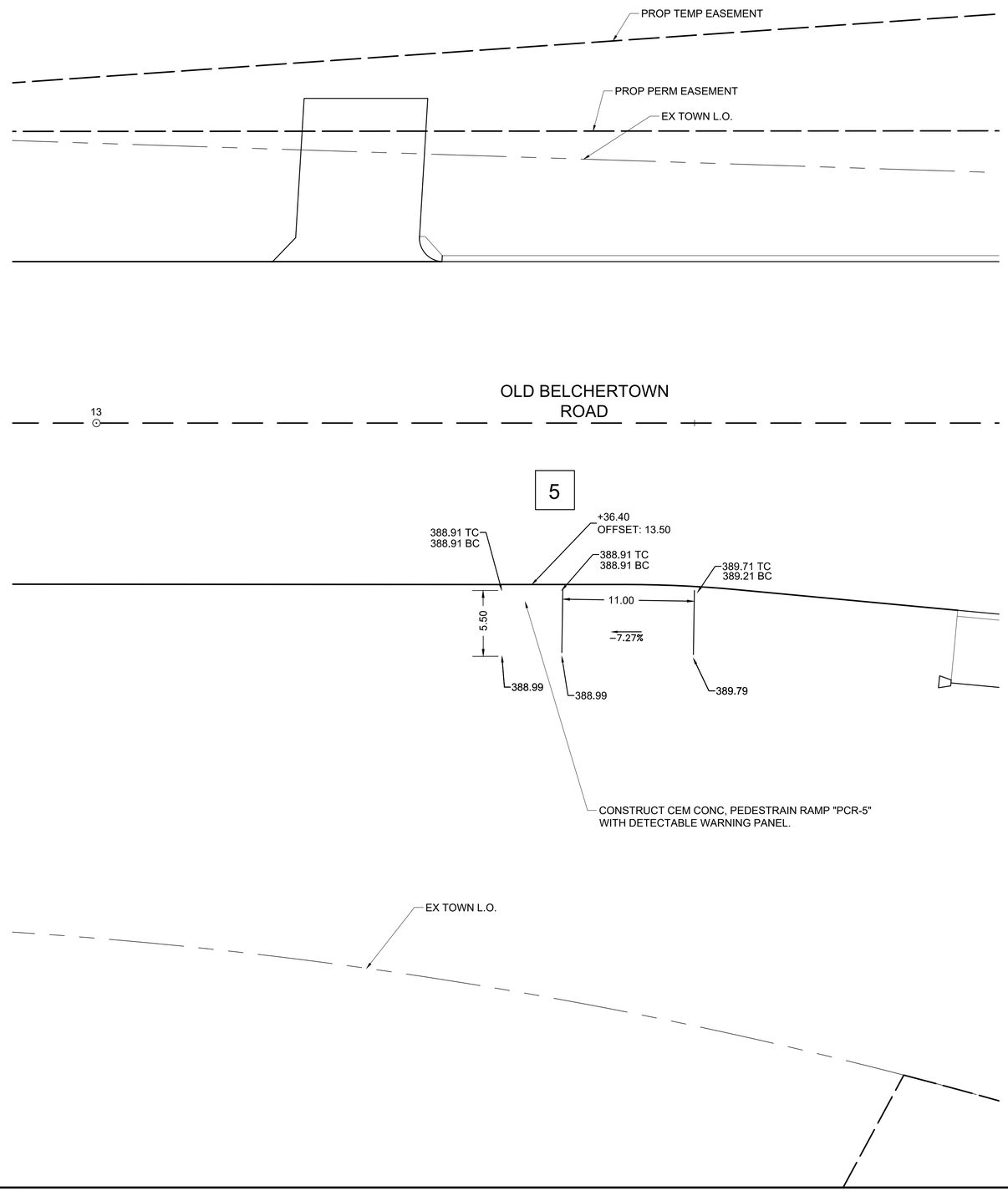

0 5 10 15 20
SCALE: 1" = 5'

605126_HD_CURB RAMP DETAILS.DWG Plotted on 19-Aug-22 1:10 PM

WARE
PALMER ROAD (ROUTE 32) OVER WARE RIVER
BRIDGE NO. W-05-015

STATE	FED. AID PROJ. NO.	SHEET NO.	TOTAL SHEETS
MA	STP(BR-OFF)-003S(606)X	56	125
PROJECT FILE NO.	605126		

DRIVE DETAILS
SHEET 1 OF 4

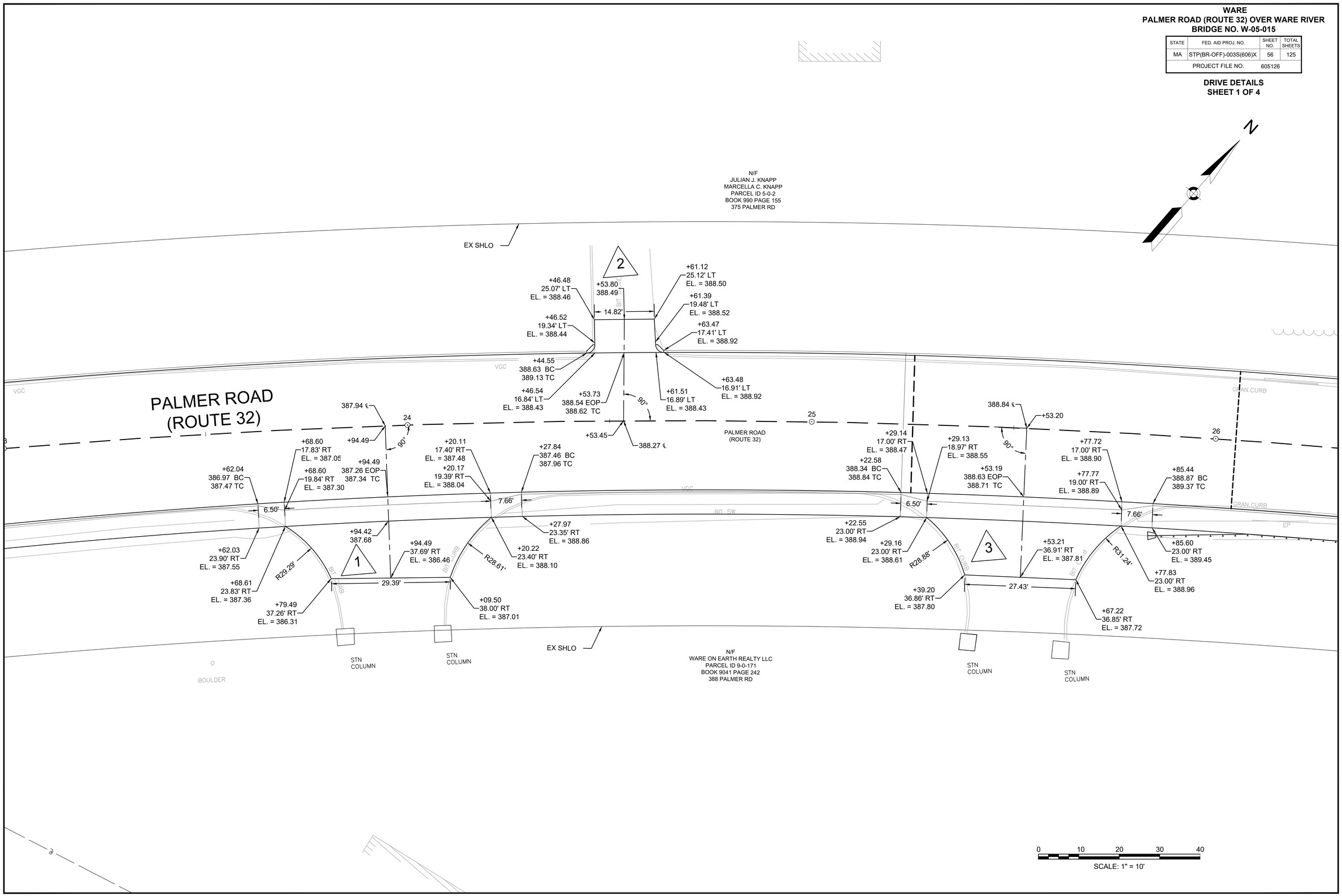

605126_HD_DRIVE DETAILS.DWG Plotted on 19-Aug-22 1:10 PM

WARE
PALMER ROAD (ROUTE 32) OVER WARE RIVER
BRIDGE NO. W-05-015

STATE	FED. AID PROJ. NO.	SHEET NO.	TOTAL SHEETS
MA	STP(BR-OFF)-003S(606)X	57	125
PROJECT FILE NO.	605126		

DRIVE DETAILS
SHEET 2 OF 4

N

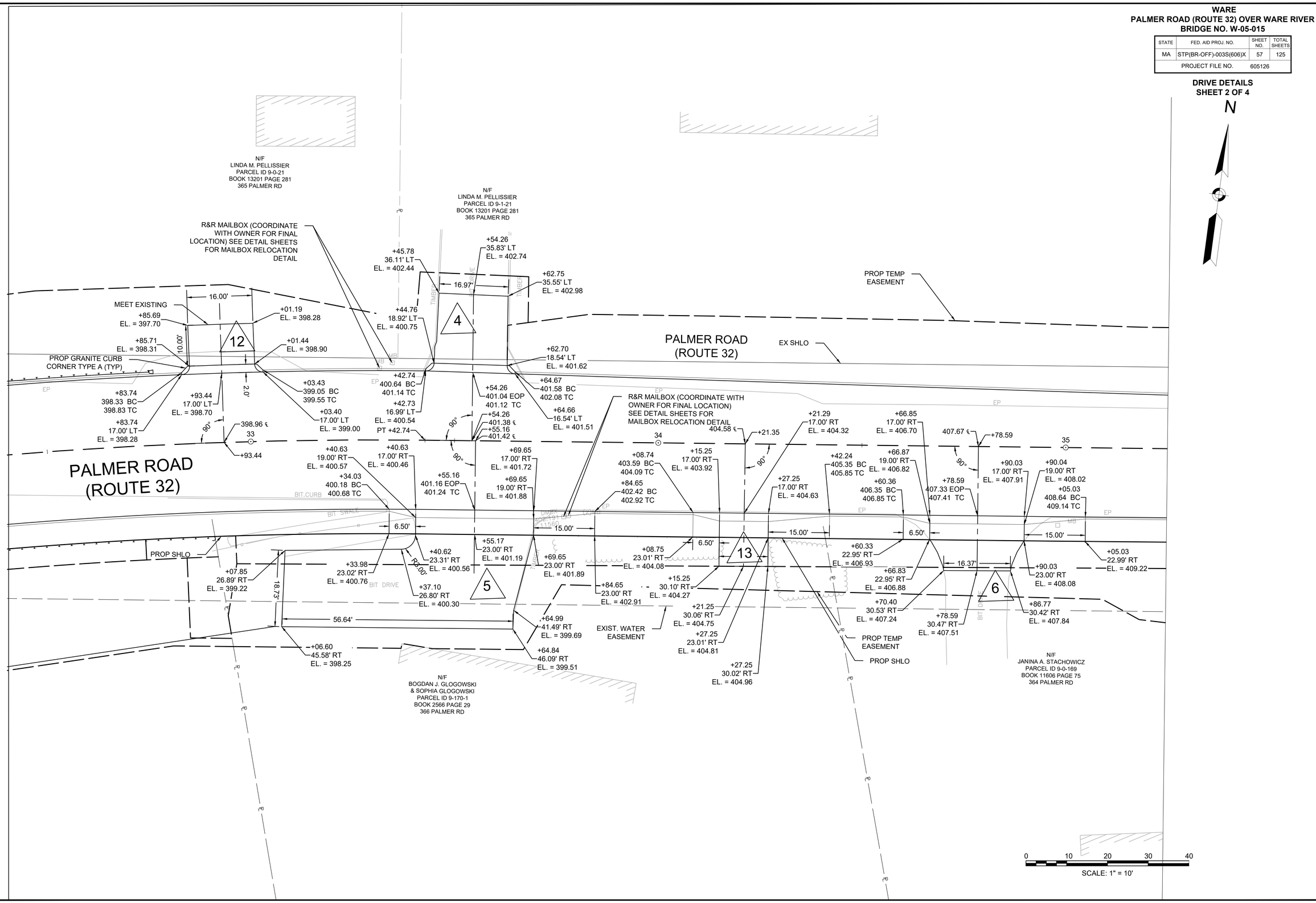

605126_HD_DRIVE DETAILS.DWG Plotted on 19-Aug-22 1:10 PM

WARE
PALMER ROAD (ROUTE 32) OVER WARE RIVER
BRIDGE NO. W-05-015

STATE	FED. AID PROJ. NO.	SHEET NO.	TOTAL SHEETS
MA	STP(BR-OFF)-003S(606)X	58	125
PROJECT FILE NO.	605126		

DRIVE DETAILS
SHEET 3 OF 4

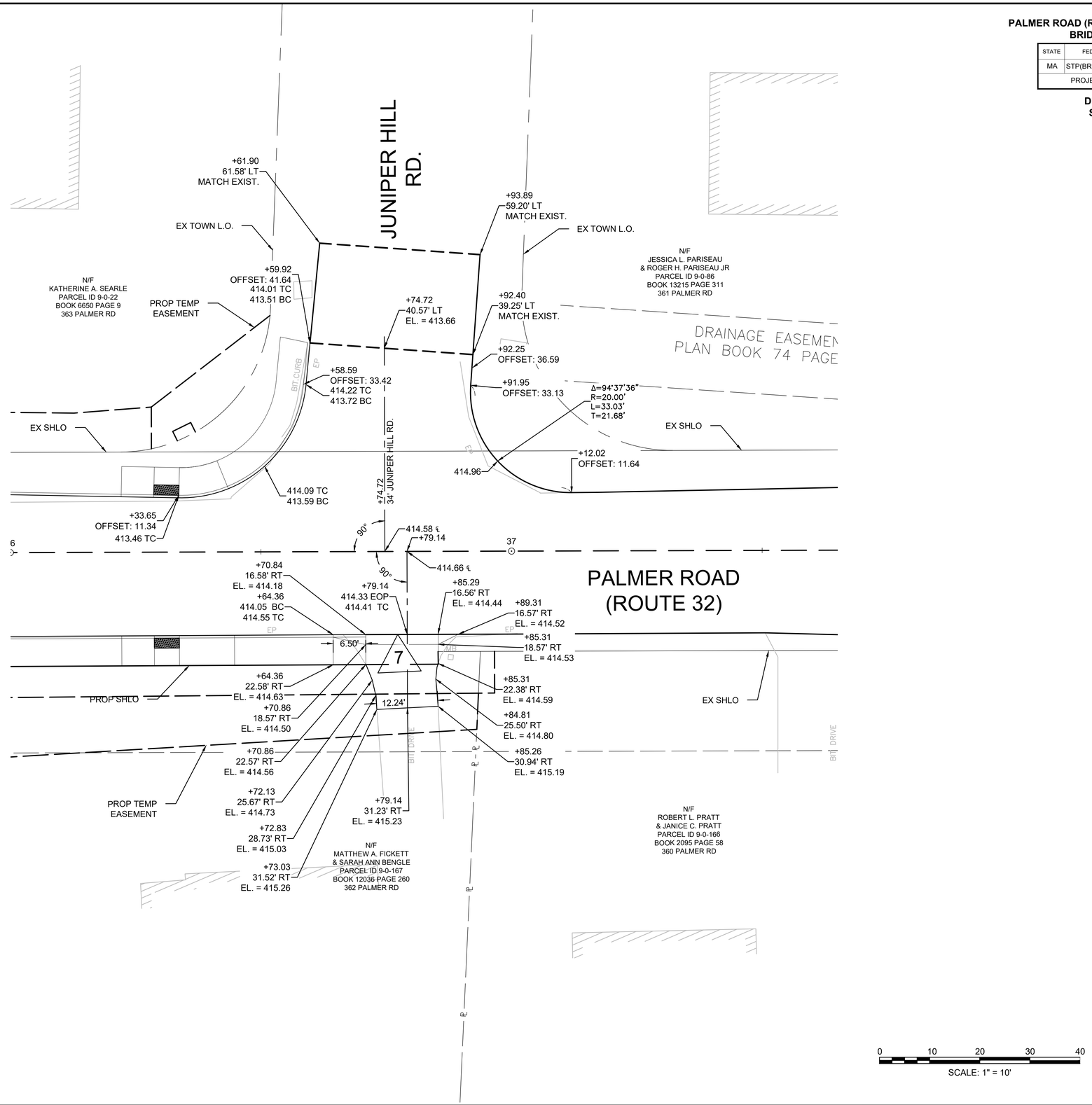

605126_HD_DRIVE DETAILS.DWG Plotted on 19-Aug-22 1:10 PM

WARE
PALMER ROAD (ROUTE 32) OVER WARE RIVER
BRIDGE NO. W-05-015

STATE	FED. AID PROJ. NO.	SHEET NO.	TOTAL SHEETS
MA	STP(BR-OFF)-003S(606)X	59	125
PROJECT FILE NO.	605126		

DRIVE DETAILS
SHEET 4 OF 4

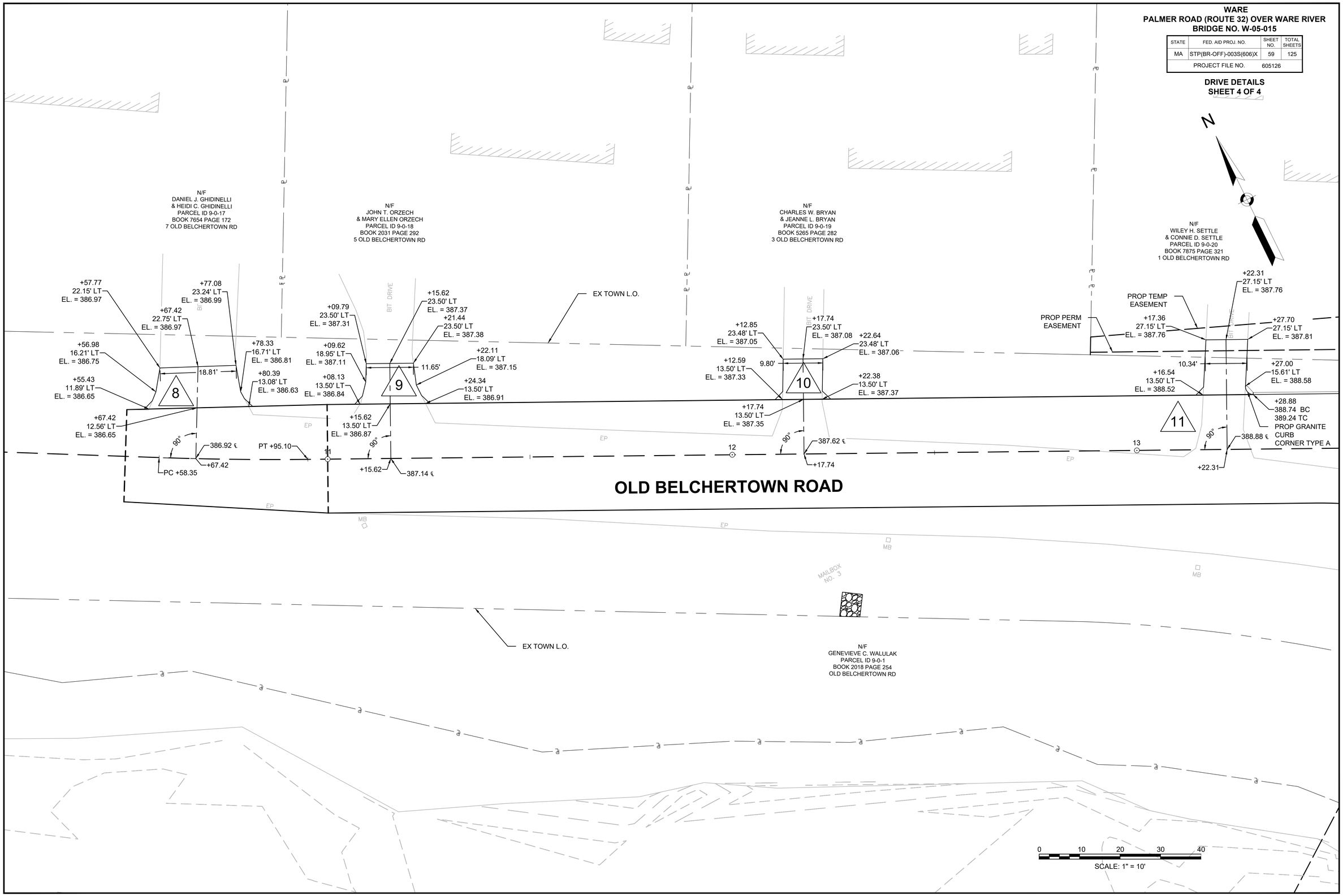

605126_HD_DRIVE DETAILS.DWG Plotted on 19-Aug-22 1:10 PM

STATE	FED. AID PROJ. NO.	SHEET NO.	TOTAL SHEETS
MA	STP(BR-OFF)-003S(606)X	60	125
PROJECT FILE NO.	605126		

KEY PLAN, PROFILE, LOCUS MAP, AND INDEX

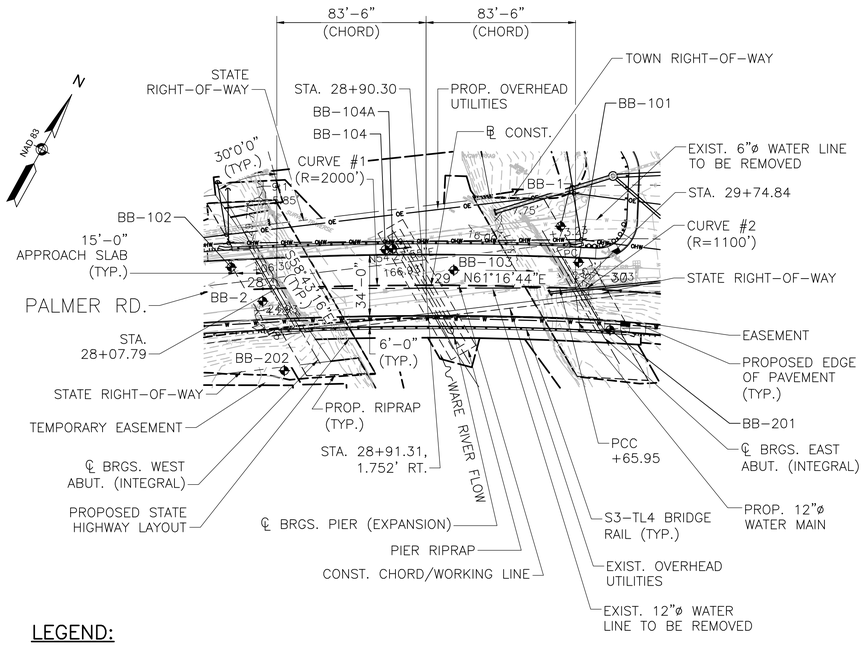

LEGEND:

◆ BORING LOCATION

KEY PLAN
SCALE: 1"=40'

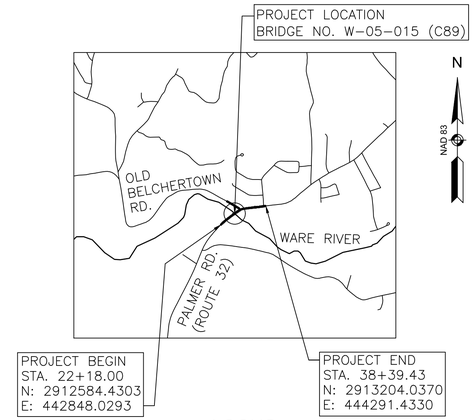

LOCUS
SCALE: 1"=2000'

INDEX TO DRAWINGS

SHEET	DESCRIPTION
1	KEY PLAN, PROFILE, LOCUS MAP, AND INDEX
2	GENERAL NOTES AND ESTIMATED QUANTITIES
3	BORING LOGS AND NOTES (SHEET 1 OF 9)
4	BORING LOGS AND NOTES (SHEET 2 OF 9)
5	BORING LOGS AND NOTES (SHEET 3 OF 9)
6	BORING LOGS AND NOTES (SHEET 4 OF 9)
7	BORING LOGS AND NOTES (SHEET 5 OF 9)
8	BORING LOGS AND NOTES (SHEET 6 OF 9)
9	BORING LOGS AND NOTES (SHEET 7 OF 9)
10	BORING LOGS AND NOTES (SHEET 8 OF 9)
11	BORING LOGS AND NOTES (SHEET 9 OF 9)
12	PLAN AND ELEVATION
13	STAGE CONSTRUCTION SHEET 1 OF 9 – SECTIONS
14	STAGE CONSTRUCTION SHEET 2 OF 9 – PHASE 1A SUPERSTRUCTURE
15	STAGE CONSTRUCTION SHEET 3 OF 9 – PHASE 1A SUBSTRUCTURE
16	STAGE CONSTRUCTION SHEET 4 OF 9 – PHASE 1B SUBSTRUCTURE
17	STAGE CONSTRUCTION SHEET 4 OF 9 – PHASE 1B SUPERSTRUCTURE
18	STAGE CONSTRUCTION SHEET 4 OF 9 – PHASE 2A SUPERSTRUCTURE
19	STAGE CONSTRUCTION SHEET 4 OF 9 – PHASE 2A SUBSTRUCTURE
20	STAGE CONSTRUCTION SHEET 4 OF 9 – PHASE 2B SUBSTRUCTURE
21	STAGE CONSTRUCTION SHEET 4 OF 9 – PHASE 2B SUPERSTRUCTURE
22	ENVIRONMENTAL IMPACT AREAS
23	WEST ABUTMENT PLAN AND ELEVATION
24	EAST ABUTMENT PLAN AND ELEVATION
25	INTEGRAL ABUTMENT DETAILS
26	WINGWALLS AND MISCELLANEOUS DETAILS
27	APPROACH SLAB, JOINTS, AND MISCELLANEOUS DETAILS
28	PIER PLAN, ELEVATION, AND SECTION
29	PIER HP PILE PLAN AND DETAILS
30	PIER DETAILS
31	RIPRAP PLAN AND ELEVATION
32	FRAMING PLAN
33	STEEL DETAILS (SHEET 1 OF 4)
34	STEEL DETAILS (SHEET 2 OF 4)
35	STEEL DETAILS (SHEET 3 OF 4)
36	STEEL DETAILS (SHEET 4 OF 4)
37	DECK PLAN AND SECTION
38	DECK DETAILS (SHEET 1 OF 2)
39	DECK DETAILS (SHEET 2 OF 2)
40	S3-TL4 BRIDGE RAILING DETAILS
41	HIGHWAY GUARDRAIL TRANSITION S3-TL4 RAILING
42	MISCELLANEOUS DETAILS

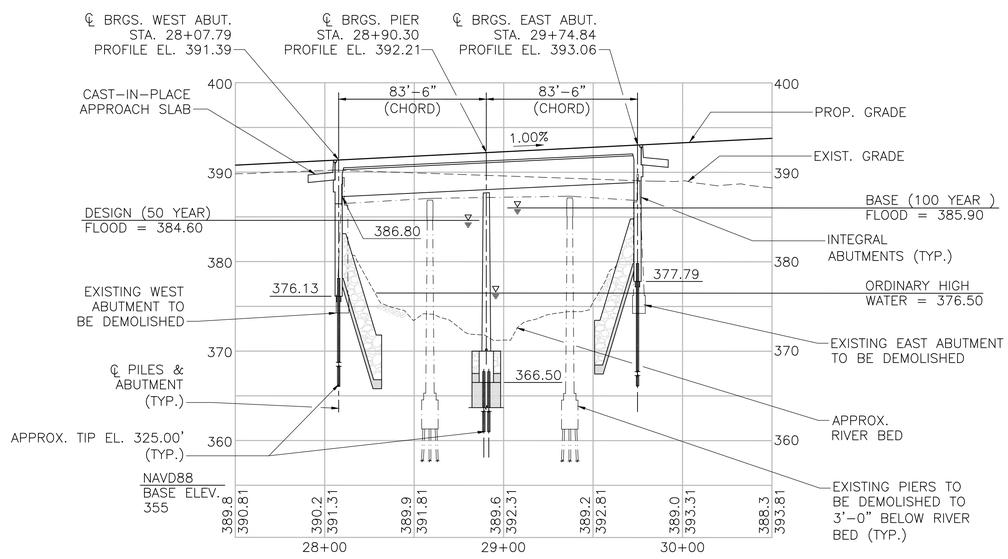

PROFILE – PALMER ROAD
SCALE: HORIZ: 1"=40'
VERT: 1"=8'

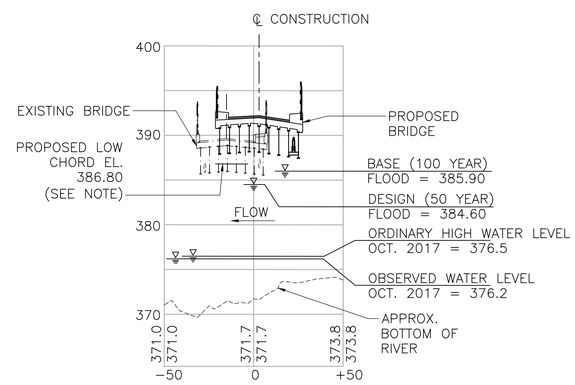

NOTE:
PROPOSED LOW CHORD ELEVATION OCCURS AT THE FACE OF WEST ABUTMENT AT NORTHERN EXTERIOR GIRDER.

PROFILE – WARE RIVER
SCALE: HORIZ: 1"=40'
VERT: 1"=8'

COMMONWEALTH OF MASSACHUSETTS
RAFIC Y. KHALIL
STRUCTURAL
No. 39125
REGISTERED PROFESSIONAL ENGINEER

Rafic Khalil — Digitally signed by Rafic Khalil Date: 2022.09.21 15:00:30 -04'00'

KLEINFELDER
Bright People. Right Solutions.
ONE BEACON STREET, SUITE 8100
BOSTON, MA 02108
O: 617-497-7800
www.kleinfelder.com

9/10/2022	ISSUED FOR CONSTRUCTION

massDOT
Massachusetts Department of Transportation
Highway Division

PROPOSED BRIDGE
WARE
STATE ROUTE 32
OVER WARE RIVER

MASSACHUSETTS DEPARTMENT OF TRANSPORTATION
HIGHWAY DIVISION
10 PARK PLAZA BOSTON, MASS

Alexander K. Bardow, P.E. — Digitally signed by Alexander K. Bardow, P.E. Date: 2022.09.22 14:48:11 -04'00' — STATE BRIDGE ENGINEER

Carrie Lavallee, P.E. — Digitally signed by Carrie Lavallee, P.E. Date: 2022.09.29 07:48:09 -04'00' — CHIEF ENGINEER

605126_BR1 FIRST SHEET (W05015).DWG Plotted on 19-Aug-2022 10:30 AM
FINAL STRUCTURAL SUBMITTAL (SF) 19-AUGUST-2022

GENERAL NOTES:

DESIGN

IN ACCORDANCE WITH THE 2017 AMERICAN ASSOCIATION OF STATE HIGHWAY AND TRANSPORTATION OFFICIALS LRFD BRIDGE DESIGN SPECIFICATIONS, 8TH EDITION FOR HL-93 LOADING.

BENCH MARKS:

ELEVATIONS ARE BASED ON THE NORTH AMERICAN VERTICAL DATUM (NAVD) OF 1988.

#1 MAG NAIL SET 1.5' ABOVE GRADE UPL 131, N: 2912814.117
E: 443137.5956 ELEV: 390.70'

#2 MAG NAIL SET 1' ABOVE GRADE UPL 127-122, N: 2913076.9519
E: 443512.5121 ELEV: 392.14'

#3 MAG SET 1.7' ABOVE GRADE, UPL 122-117, N: 2913162.9316
E: 444147.3218 ELEV: 417.58'

DATE:

TO BE PLACED ON THE INSIDE FACES OF THE NORTHEAST AND SOUTHWEST HIGHWAY GUARDRAIL TRANSITIONS. A SHEET SHOWING SIZE AND CHARACTER OF NUMERALS WILL BE FURNISHED. THE DATE USED SHALL BE THE LATEST YEAR OF CONTRACT COMPLETION AS OF THE DATE THE FIRST HIGHWAY GUARDRAIL TRANSITION IS CONSTRUCTED. BOTH LOCATIONS SHALL FEATURE THE SAME DATE.

SURVEY:

THE EXISTING CONDITIONS SHOWN ON THE BASE MAP ARE BASED ON THE GROUND INSTRUMENT SURVEY PERFORMED BY GREEN INTERNATIONAL AFFILIATES, INC. (GREEN) BETWEEN SEPTEMBER 11, 2017 AND APRIL 13, 2018, AND FEBRUARY 2020. SEE FIELD NOTES IN MASSDOT DISTRICT 2 FIELD BOOK 40532.

HORIZONTAL AND VERTICAL CONTROL WAS ESTABLISHED BY MASSDOT SURVEY, IN MASSDOT DISTRICT 2 FIELD BOOK 41273, PAGE 128, ON SEPTEMBER 21, 2017. HORIZONTAL DATUM IS BASED ON THE MASSACHUSETTS STATE PLANE COORDINATE SYSTEM, NAD83 (2011) EPOCH 2010.0000, VERTICAL DATUM IS NAVD 88 (COMPUTED USING GEOID12B).

SCALES:

SCALES NOTED ON THE PLANS ARE NOT APPLICABLE TO REDUCED SIZE PRINTS. DIVIDE SCALES BY 2 FOR HALF-SIZE PRINTS (A3).

FOUNDATIONS:

FOUNDATIONS MAY BE ALTERED, IF NECESSARY, TO SUIT CONDITIONS ENCOUNTERED DURING CONSTRUCTION, WITH THE APPROVAL OF THE ENGINEER.

UNSUITABLE MATERIAL:

ALL UNSUITABLE MATERIAL SHALL BE REMOVED WITHIN THE LIMITS OF THE FOUNDATIONS OF THE STRUCTURE, AS DIRECTED BY THE ENGINEER.

ANCHOR BOLTS:

ALL ANCHOR BOLTS SHALL BE SET BY TEMPLATE BEFORE THE CONCRETE IS PLACED.

CONCRETE:

UNLESS OTHERWISE NOTED, THE FOLLOWING CONCRETE MIXES SHALL BE USED FOR THE SPECIFIED COMPONENTS:

	①	②	③
INTEGRAL ABUTMENTS AND WINGWALLS BELOW THE BRIDGE SEAT CONSTRUCTION JOINT, PIER PILE CAP, APPROACH SLABS	4000 PSI	1½"	565
INTEGRAL ABUTMENTS AND WINGWALLS ABOVE THE BRIDGE SEAT CONSTRUCTION JOINT, PIER STEM, KEEPER BLOCKS, BRIDGE DECK	4000 PSI	¾"	585
	HP CEMENT CONCRETE		
SIDEWALK, INTEGRAL WINGWALL COPING ABOVE CONSTRUCTION JOINT AT TOP OF DECK, HIGHWAY GUARDRAIL TRANSITION BASE AND TOP	5000 PSI	¾"	685
	HP CEMENT CONCRETE		

KEY:

① 28-DAY COMPRESSIVE STRENGTH

② MAXIMUM AGGREGATE SIZE

③ CEMENT CONTENT (LB/CY)

CONCRETE COVER

ALL SURFACES CAST AGAINST EARTH OR ROCK:	3"
ALL SURFACES EXPOSED TO EARTH OR WEATHER:	2"
DECK AND SIDEWALK:	
TOP	2"
BOTTOM	1½"
FASCIA	3"

MEMBRANE WATERPROOFING:

ALL MEMBRANE WATERPROOFING USED ON BRIDGE DECKS SHALL BE MEMBRANE WATERPROOFING FOR BRIDGE DECKS - SPRAY APPLIED.

EXISTING BRIDGE PLANS:

PLANS FOR EXISTING BRIDGE MAY BE SEEN AT THE OFFICE OF PLANS AND RECORDS, MASSACHUSETTS DEPARTMENT OF TRANSPORTATION - HIGHWAY DIVISION, 10 PARK PLAZA, BOSTON, MASSACHUSETTS.

EXISTING CONDITIONS:

DIMENSIONS SHOWN ON EXISTING DETAILS ARE TAKEN FROM ORIGINAL DESIGN DRAWINGS AND ARE NOT GUARANTEED. THE CONTRACTOR SHALL DETERMINE AND ESTABLISH ALL DIMENSIONS AND DETAILS NECESSARY FOR COMPLETION OF ALL WORK BY FIELD MEASUREMENT AND SURVEY. THE CONTRACTOR SHALL BE RESPONSIBLE FOR FIELD DIMENSIONS AND SHALL NOT ORDER ANY MATERIAL OR COMMENCE ANY FABRICATION UNTIL THEY HAVE MADE THE REQUIRED MEASUREMENTS ON THE ACTUAL STRUCTURE AND THE EXTENT OF THE PROPOSED WORK HAS BEEN APPROVED BY THE ENGINEER.

DOWEL BAR SPLICERS

ALL REINFORCING BARS SHALL BE MADE CONTINUOUS ACROSS STAGE CONSTRUCTION JOINTS BY DOWEL BAR SPLICERS. DOWEL BAR SPLICERS SHALL HAVE THE SAME COATINGS AS THE REINFORCING BARS THEY ARE SPLICING.

UTILITIES:

ALL EXISTING UTILITIES SHALL BE LOCATED AND PROTECTED FROM DAMAGE BY THE CONTRACTOR. THE CONTRACTOR SHALL BE RESPONSIBLE FOR COORDINATING WITH UTILITY OWNERS TO TEMPORARILY OR PERMANENTLY RELOCATE OVERHEAD WIRES AND UTILITY POLES, AS REQUIRED BY THE CONSTRUCTION.

ESTIMATED QUANTITIES

(NOT GUARANTEED)

ITEM	QUANTITY	UNIT
DEMOLITION OF SUPERSTRUCTURE OF BRIDGE NO. W-05-015	1	LS
REINFORCED CONCRETE EXCAVATION	550	CY
BRIDGE EXCAVATION	1910	CY
BRIDGE EXCAVATION WITHIN COFFERDAM	840	CY
CLASS B ROCK EXCAVATION	140	CY
GRAVEL BORROW FOR BRIDGE FOUNDATION	900	CY
CRUSHED STONE FOR INTEGRAL ABUTMENTS	60	TON
CRUSHED STONE FOR BRIDGE FOUNDATIONS	20	TON
CRUSHED STONE FOR FILTER BLANKET	300	CY
SUPERPAVE BRIDGE SURFACE COURSE - 12.5 (SSC-B-12.5)	60	TON
SUPERPAVE BRIDGE PROTECTIVE COURSE - 12.5 (SPC-B-12.5)	88	TON
GEOTEXTILE FABRIC FOR SEPARATION	1100	SY
STEEL PILE HP 12 X 84	2100	FT
STEEL PILE SPLICE HP 12 X 84	16	EA
DRILLING FOR PILE OBSTRUCTIONS	210	FT
DYNAMIC LOAD TEST BY CONTRACTOR	6	EA
PILE SHOES	42	EA
TEMPORARY SUPPORT OF EXCAVATION	1	LS
MODIFIED RIPRAP	2300	TON
TEMPORARY COFFERDAM - STRUCTURE NO. W-05-015	1	LS
TEMPORARY CONTROL OF WATER - STRUCTURE NO. W-05-015	1	LS
TEMPORARY PROTECTIVE SHIELDING BRIDGE NO. W-05-015	1	LS
BRIDGE STRUCTURE, BRIDGE NO. W-05-015	1	LS

REINFORCEMENT:

REINFORCING STEEL SHALL CONFORM TO THE REQUIREMENTS OF AASHTO M 31 GRADE 60. ALL REINFORCING BARS AND SUPPORT DEVICES SHALL BE EPOXY COATED. UNLESS OTHERWISE NOTED ON THE CONSTRUCTION DRAWINGS, ALL BARS SHALL BE LAPPED AS FOLLOWS:

MODIFICATION CONDITION	#4 BARS	#5 BARS	#6 BARS	#7 BARS	#8 BARS
1. NONE	16"	19"	23"	34"	45"
2. 12" OF CONCRETE BELOW BAR	20"	25"	30"	45"	58"
3. EPOXY COATED BARS, COVER < $3d_b$, OR CLEAR SPACING < $6d_b$	23"	29"	34"	51"	65"
4. COATED BARS, ALL OTHER CASES	18"	23"	27"	41"	52"
5. CONDITION 2. AND 3.	26"	32"	39"	58"	75"
6. CONDITION 2. AND 4.	24"	30"	36"	52"	68"

ALL OTHER BARS SHALL BE LAPPED AS SHOWN ON THE CONSTRUCTION DRAWINGS.

WARE
STATE ROUTE 32 (PALMER ROAD) OVER WARE RIVER

STATE	FED. AID PROJ. NO.	SHEET NO.	TOTAL SHEETS
MA	STP(BR-OFF)-003S(606)X	61	125
PROJECT FILE NO.	605126		

GENERAL NOTES AND ESTIMATED QUANTITIES

TRAFFIC DATA	ROADWAY OVER	ROADWAY UNDER
DESIGN YEAR	2050	N/A
AVERAGE DAILY TRAFFIC - PRESENT	10,300	N/A
AVERAGE DAILY TRAFFIC - DESIGN YEAR	14,303	N/A
DESIGN HOURLY VOLUME	655	N/A
DIRECTIONAL DISTRIBUTION	(50.19%)	N/A
TRUCK PERCENTAGE - AVERAGE DAY	5.3%	N/A
TRUCK PERCENTAGE - PEAK HOUR	4.1%	N/A
DESIGN SPEED	45 MPH	N/A
DIRECTIONAL DESIGN HOURLY VOLUME	329	N/A

SEISMIC DESIGN CRITERIA	
DESIGN RETURN PERIOD:	1,000 YEARS
DESIGN SPECTRA	
As	0.094g
SDs	0.206g
SD1	0.091g
SITE CLASS	D
SEISMIC DESIGN CATEGORY (SDC)	A

HYDRAULIC DESIGN DATA	
DRAINAGE AREA (SQ. MILES)	198
DESIGN FLOOD DISCHARGE (C.F.S.)	9,320
DESIGN FLOOD FREQUENCY (YEARS)	50
DESIGN FLOOD VELOCITY (F.P.S.)	7.17
DESIGN FLOOD ELEVATION (FEET, NAVD)	384.6
BASE (100-YEAR) FLOOD DATA	
BASE FLOOD DISCHARGE (C.F.S.)	12,720
BASE FLOOD ELEVATION (FEET, NAVD)	385.9
DESIGN AND CHECK SCOUR DATA	
DESIGN SCOUR FLOOD EVENT RETURN FREQUENCY (YEARS)	100
DESIGN FLOOD ABUTMENT SCOUR DEPTH (FEET)	12.5
DESIGN FLOOD PIER SCOUR DEPTH (FEET)	9.4
CHECK SCOUR FLOOD EVENT RETURN FREQUENCY (YEARS)	200
CHECK FLOOD ABUTMENT SCOUR DEPTH (FEET)	14.5
CHECK FLOOD PIER SCOUR DEPTH (FEET)	11.3
FLOOD OF RECORD	
DISCHARGE (C.F.S.)	22,700
FREQUENCY (IF KNOWN, YEARS)	500
MAXIMUM ELEVATION (FEET, NAVD)	N/A
DATE (MM/YYYY)	9/1938
HISTORY OF ICE FLOES	N/A
EVIDENCE OF SCOUR AND EROSION	N/A

TEMPORARY WATER CONTROL DESIGN DATA	
DESIGN FLOOD DISCHARGE (C.F.S)	2,980
DESIGN FLOOD FREQUENCY (YEARS)	2
DESIGN FLOOD VELOCITY (F.P.S.)	2.76
DESIGN FLOOD ELEVATION (FEET, NAVD)	382.3

9/10/2022	ISSUED FOR CONSTRUCTION
DATE	DESCRIPTION

THIS SHEET IS APPROVED FOR CONSTRUCTION BY MASSDOT
AUTHORIZED SIGNATORY: STATE BRIDGE ENGINEER
USE ONLY PRINTS OF LATEST DATE

605126_BR2 SECOND SHEET (W05015).DWG Plotted on 17-Sep-2022 10:26 PM
FINAL STRUCTURAL SUBMITTAL (SF) 19-AUGUST-2022

WARE
STATE ROUTE 32 (PALMER ROAD) OVER WARE RIVER

STATE	FED. AID PROJ. NO.	SHEET NO.	TOTAL SHEETS
MA	STP(BR-OFF)-003S(606)X	62	125
PROJECT FILE NO. 605126			

BORING LOGS AND NOTES
SHEET 1 OF 9

BORING NOTES:

1. LOCATION OF BORINGS SHOWN ON THE PLAN THUS: ✥

2. BORINGS ARE TAKEN FOR PURPOSE OF DESIGN AND SHOW CONDITIONS AT BORING POINTS ONLY, BUT DO NOT NECESSARILY SHOW THE NATURE OF THE MATERIALS TO BE ENCOUNTERED DURING CONSTRUCTION.

3. WATER LEVELS SHOWN ON THE BORING LOGS WERE OBSERVED AT THE TIME OF TAKING BORINGS AND DO NOT NECESSARILY SHOW THE TRUE GROUND WATER LEVEL.

4. FIGURES IN COLUMNS INDICATE NUMBER OF BLOWS REQUIRED TO DRIVE A 1 3/8" I.D. SPLIT SPOON SAMPLER 6" USING A 140 POUND WEIGHT FALLING 30".

5. BORING SAMPLES ARE STORED AT A STORAGE FACILITY LOCATED ON ROUTE 114 (219 WINTHROP AVE.) IN LAWRENCE, MA. THE CONTRACTOR MAY EXAMINE THE SOIL AND ROCK SAMPLES BY CONTACTING THE MASSDOT GEOTECHNICAL SECTION AT 10 PARK PLAZA, BOSTON, MA.

6. BORINGS BB−1 AND BB−2 WERE ADVANCED IN FEBRUARY 2018 BY NORTHERN DRILL SERVICE, INC.

7. BORINGS BB−101 TO BB−104, AND BB−104A WERE ADVANCED IN MAY 2019 BY NEW ENGLAND BORING CONTRACTORS.

8. BORINGS BB−201 AND BB−202 WERE ADVANCED IN DECEMBER 2019 BY NEW ENGLAND BORING CONTRACTORS.

9. THE NORTH AMERICAN VERTICAL DATUM (NAVD) OF 1988 IS USED THROUGHOUT.

WEST ABUTMENT
BOTTOM OF PILE
CAP EL. 376.13'

WEST ABUTMENT
HP PILES END BEARING ON BEDROCK,
APPROXIMATE PILE TIP EL. 325.00'

Date Begin - End: 5/17/2019 - 5/20/2019 **Drilling Company:** New England Boring Contractors **BORING LOG BB-102**
Logged By: D. Dwyer/ C. Miller **Drill Crew:** Mark & Cody
Hor.-Vert. Datum: NAVD88 **Drilling Equipment:** GT8 Geotech Drill **Hammer Type - Drop:** 140 lb. Auto - 30 in.
Plunge: -90 degrees **Drilling Method:** Drive/Wash
Weather: Rainy, 50° F **Exploration Diameter:** 3 in. O.D.

FIELD EXPLORATION — Northing: 2912964.34, Easting: 443283.54; Approximate Ground Surface Elevation (ft.): 390; Surface Condition: Bituminous Pavement

Approximate Elevation (feet)	Depth (feet)	Lithologic Description	Sample Number	Sample Type	Blow Counts(6"): Blows to Drive 6" I.D. Poured Pen(PP): tsf RQD=%	Recovery (NR=No Recovery)	USCS Symbol	Water Content (%)	Dry Unit Wt. (pcf)	Passing #4 (%)	Passing #200 (%)	Liquid Limit	Plasticity Index (NP=Non-Plastic)	Additional Tests/ Remarks
		BITUMINOUS PAVEMENT: 5"												Augered to 2 feet
385	5	**S-1**: Top 8.5": **FILL: Poorly Graded SAND with Gravel (SP)**: fine to medium-grained, brown to black, dry, medium dense, non-plastic **S-1**: Bottom 6" **SILT (ML)**: brownish tan, wet, highly-plastic	S-1		BC=12 13 7 8	15"								
		S-2: Poorly Graded SAND (SP): fine to coarse-grained, brown and black, moist, medium dense, trace fine to medium-grained gravel	S-2		BC=19 7 5 6	9"								
380	10	**S-3: Poorly Graded SAND (SP)**: fine to medium-grained, brownish gray, moist, medium dense, trace fine-grained gravel **S-4**: Top 10": **Silty SAND (SM)**: fine to medium-grained, brown and gray, loose, trace fine-grained gravel	S-3		BC=4 6 4 5	6"								
			S-4		BC=3 4 3 4	14"								
		S-4: Bottom 4": **Silty SAND (SM)**: fine to medium-grained, brown and black, loose	S-5		BC=3 4 3 5	24"								
375	15	**S-5**: Top 12": **Poorly Graded SAND (SP)**: fine to medium-grained, brown, loose **S-5**: Bottom 12": **Organic Sandy SILT (ML)**: brown to black, moist, trace organics, roots	S-6		BC=16 27 31 33	16"								
		S-6: ALLUVIAL DEPOSITS: Well-Graded SAND with Gravel (SW): fine to coarse-grained, gray and brown, moist												
370	20	**S-7: Poorly Graded SAND with Gravel (SP)**: fine to coarse-grained, fine to coarse-grained angular gravel, grayish brown, moist, dense, 1" gravel in tip	S-7		BC=21 14 16 29	12"	SP			53	4.8			
		Assumed lithology change												
365	25	**S-8: Silty SAND with Gravel (SM)**: fine-grained, grayish brown, moist, dense, fine-grained gravel, 1" gravel in tip	S-8		BC=18 19 15 12	6"								
360	30	**S-9: Silty SAND (SM)**: fine-grained, gray, moist, medium dense	S-9		BC=5 5 9 8	12"								
		Assumed lithology change												
355	35	**S-10: Poorly Graded SAND (SP)**: fine to medium-grained, gray, moist, medium dense	S-10		BC=5 6 6 7	12"	SP			100	4.7			

KLEINFELDER *Bright People. Right Solutions.*

PROJECT NO.: 20181590	BORING LOG BB-102	PLATE
DRAWN BY: MC		
CHECKED BY: JM	Ware Bridge Route 32 Ware, Massachusetts	BB-102
DATE: 6/21/2019		
REVISED: 1/14/2020		PAGE: 1 of 2

Date Begin - End: 5/17/2019 - 5/20/2019 **Drilling Company:** New England Boring Contractors **BORING LOG BB-102**
Logged By: D. Dwyer/ C. Miller **Drill Crew:** Mark & Cody
Hor.-Vert. Datum: NAVD88 **Drilling Equipment:** GT8 Geotech Drill **Hammer Type - Drop:** 140 lb. Auto - 30 in.
Plunge: -90 degrees **Drilling Method:** Drive/Wash
Weather: Rainy, 50° F **Exploration Diameter:** 3 in. O.D.

FIELD EXPLORATION — Northing: 2912964.34, Easting: 443283.54; Approximate Ground Surface Elevation (ft.): 390; Surface Condition: Bituminous Pavement

Approximate Elevation (feet)	Depth (feet)	Lithologic Description	Sample Number	Sample Type	Blow Counts(6"): Blows to Drive 6" I.D. Poured Pen(PP): tsf RQD=%	Recovery (NR=No Recovery)	USCS Symbol	Water Content (%)	Dry Unit Wt. (pcf)	Passing #4 (%)	Passing #200 (%)	Liquid Limit	Plasticity Index (NP=Non-Plastic)	Additional Tests/ Remarks
		Assumed lithology change **S-11:** Similar to S-10 except loose	S-11		BC=4 4 4 6	13"								
345	45	**S-12:** Top 7": Similar to S-10 except trace gravel, loose **S-12:** Bottom 4": **Sandy SILT (ML)**: brown, moist	S-12		BC=4 4 3 4	11"								
														Washed through boulder from 48 to 49 feet
340	50	**S-13: Silty SAND (SM)**: fine-grained, grayish brown, moist, medium dense, trace gravel	S-13		BC=10 8 6 5	16"								
335	55	**S-14:** Similar to S-13 except with gravel, fine to coarse grained sand, predominantly fine to medium-grained sand, sub-rounded, 1" medium to coarse-grained poorly graded sand in top 2" of sample, very dense	S-14		BC=11 18 35 32	19"								Drilling rate decreased at 55 feet
330	60													Drilling rate decreased from 59.8 to 61 feet due to boulder
		S-15: Similar to S-14 except with lenses of silt and poorly graded sand	S-15		BC=120/3"	3"								Roller bit refusal at 63.5 feet
325	65	**R-1: GNEISS**:: fine to medium-grained, dark bluish gray, slightly weathered, strong, moderately fractured, hornblende, garnet, plagioclase, quartz, biotite, thinly bedded to massive bedded, banding at ~45 degrees	R-1		RQD=83	100%								R-1 Coring rates: 63.5- 64.5 ft= 3min 27sec 64.5- 65.5 ft= 2min 12sec 65.5- 66.5 ft= 2min 66.5- 67.5 ft= 2min 20sec 67.5- 68.5 ft= 2min 55sec
320	70	**R-2:** Similar to R-1 except medium strong to strong, highly fractured, with more biotite, shistosic bands, more frequently thinly bedded	R-2		RQD=85	100%								R-2 Coring rates: 68.5- 69.5 ft= 2min 54sec 69.5- 70.5 ft= 1min 51sec 70.5- 71.5 ft= 1min 58sec 71.5- 72.5 ft= 2min 6sec 72.5- 73.5= 1min 52sec
315	75	The boring was terminated at approximately 73.5 ft. below ground surface. The boring was backfilled with cuttings and patched at the surface with concrete on May 17, 2019.												

GROUNDWATER LEVEL INFORMATION:
Groundwater was not observed during drilling or after completion.
GENERAL NOTES:
The exploration location and elevation are approximate and were estimated by Kleinfelder.

KLEINFELDER *Bright People. Right Solutions.*

PROJECT NO.: 20181590	BORING LOG BB-102	PLATE
DRAWN BY: MC		
CHECKED BY: JM	Ware Bridge Route 32 Ware, Massachusetts	BB-102
DATE: 6/21/2019		
REVISED: 1/14/2020		PAGE: 2 of 2

9/10/2022	ISSUED FOR CONSTRUCTION
DATE	DESCRIPTION

THIS SHEET IS APPROVED FOR CONSTRUCTION BY MASSDOT AUTHORIZED SIGNATORY: STATE BRIDGE ENGINEER
USE ONLY PRINTS OF LATEST DATE

605126_BR3-11 BORING LOGS (W05015).DWG Plotted on 17-Sep-2022 10:27 PM
FINAL STRUCTURAL SUBMITTAL (SF) 19-AUGUST-2022

WARE
STATE ROUTE 32 (PALMER ROAD) OVER WARE RIVER

STATE	FED. AID PROJ. NO.	SHEET NO.	TOTAL SHEETS
MA	STP(BR-OFF)-003S(606)X	63	125
PROJECT FILE NO. 605126			

BORING LOGS AND NOTES
SHEET 2 OF 9

BORING NOTES:

1. LOCATION OF BORINGS SHOWN ON THE PLAN THUS:
2. SEE SHEET 3 FOR ADDITIONAL NOTES.

WEST ABUTMENT
BOTTOM OF PILE
CAP EL. 376.13'

BORING LOG BB-2

Date Begin - End:	2/26/2018 - 2/27/2018	**Drilling Company:**	Northern Drilling
Logged By:	C. Miller / RDC	**Drill Crew:**	Carl & John
Hor.-Vert. Datum:	NAV88	**Drilling Equipment:**	Mobile B-57
Plunge:	-90 degrees	**Drilling Method:**	Drive/Wash
Weather:	30s & 40s	**Exploration Diameter:**	5 in. O.D.

Hammer Type - Drop: 140 lb. Auto - 30 in.

FIELD EXPLORATION: Northing: 2912948.68; Easting: 443297.61; Approximate Ground Surface Elevation (ft.): 390; Surface Condition: Bituminous Pavement

LABORATORY RESULTS

Approximate Elevation (feet)	Depth (feet)	Lithologic Description	Sample Number	Sample Type	Blow Counts/6-in. Penetration Resistance	Recovery (Inches/Recovery)	USCS Symbol	Water Content (%)	Dry Unit Wt. (pcf)	Passing #4 (%)	Passing #200 (%)	Liquid Limit	Plasticity Index (NP=Non-Plastic)	Additional Tests/ Remarks
		BITUMINOUS PAVEMENT: 3"												
		S-1: FILL: Poorly Graded SAND with some Gravel (SM): fine to coarse-grained sand, sub-angular to sub-rounded, non-plastic, olive to yellowish brown, moist, medium dense, bituminous fragments, some inorganic silt	S-1		BC=8 10 11	8"								
		S-2: similar to S-1, except more gravel	S-2		BC=33 9 21 17	14"								Rough rollerbitting from 9 to 10 feet, possible boulder Drill rig grinding from 2 to 4 feet
		S-3: similar to S-1, except more gravel, sub-angular, yellowish brown to yellow, dense	S-3		BC=17 18 17 16	8"								
385	5	**S-4:** similar to S-1, except 3" dark reddish brown silty sand lense in middle of sample	S-4		BC=19 15 13 13	14"				76	21			
		S-5: Organic SILT and Sand (ML): fine to medium-grained sand, sub-rounded, non-plastic, dark red to reddish brown, moist, medium stiff, low dilatancy, black organic lenses	S-5		BC=7 3 3 4	15"						NP	NP	Cuttings/wash water changed color at 9 feet
		S-6: top 7" similar to S-5	S-6		PH=1.25	24"								
		S-7: bottom 17" **Organic SILT with some Sand (OL)**: fine-grained sand, sub-rounded, low plasticity, dark brown, wet, medium stiff, roots	S-7		BC=6 4 3 3	15"								
380	10	**S-8:** top 10" similar to bottom 17" of S-6	S-8		BC=2 3 14 21	15"								Drill rig grinding at 14.5 feet
		S-7: bottom 5": **ALLUVIAL DEPOSITS: Poorly Graded SAND with some Gravel (SP)**: fine to coarse-grained sand, sub-angular to sub-rounded, non-plastic, yellow to yellowish brown, wet, dense			BC=26 56 34 43									Drilled through boulder from 17.5 to 18.5 feet
		S-9: similar to bottom 5" of S-7, except very dense	S-9		BC=25 45 80 112									Presumed cobble in sample caused high blow counts Drill rig grinding at 20 feet Increased drilling rate below 22 feet
375	15	**S-9:** similar to bottom 5" of S-7, except very dense, with more gravel												
		Assumed lithology change												
370	20	**S-10: Silty SAND (SM)**: fine to coarse-grained sand and inorganic silt, predominantly medium-grained sand, non-plastic, light gray, wet, medium dense	S-10		BC=9 10 13 10	15"				100	38			
365	25	**S-11:** similar to S-10, except with more coarse-grained sand, loose	S-11		BC=5 6 3 5	22"								
360	30	**S-12:** similar to S-10, except some gravel, very dense	S-12		BC=45 48 40 49	9"								
355	35	**S-13:** similar to S-10, except more silt	S-13											

KLEINFELDER *Bright People. Right Solutions.*

PROJECT NO.:	20181590	BORING LOG BB-2	PLATE
DRAWN BY:	MAP		BB-2
CHECKED BY:	CAM	Ware Bridge Route 32 Ware, Massachusetts	
DATE:	4/4/2018		
REVISED:	7/23/2018		PAGE: 1 of 2

WEST ABUTMENT
HP PILES END BEARING ON BEDROCK,
APPROXIMATE PILE TIP EL. 325.00'

BORING LOG BB-2

Date Begin - End:	2/26/2018 - 2/27/2018	**Drilling Company:**	Northern Drilling
Logged By:	C. Miller / RDC	**Drill Crew:**	Carl & John
Hor.-Vert. Datum:	NAV88	**Drilling Equipment:**	Mobile B-57
Plunge:	-90 degrees	**Drilling Method:**	Drive/Wash
Weather:	30s & 40s	**Exploration Diameter:**	5 in. O.D.

Hammer Type - Drop: 140 lb. Auto - 30 in.

FIELD EXPLORATION: Northing: 2912948.68; Easting: 443297.61; Approximate Ground Surface Elevation (ft.): 390; Surface Condition: Bituminous Pavement

LABORATORY RESULTS

Approximate Elevation (feet)	Depth (feet)	Lithologic Description	Sample Number	Sample Type	Blow Counts/6-in. Penetration Resistance	Recovery (Inches/Recovery)	USCS Symbol	Water Content (%)	Dry Unit Wt. (pcf)	Passing #4 (%)	Passing #200 (%)	Liquid Limit	Plasticity Index (NP=Non-Plastic)	Additional Tests/ Remarks
			S-13 (cont.)		BC=6 5 5 7									Low SPT N-Value likely due to running sands at 40 ft. depth
345	45	**S-14: Silty SAND with some Gravel (SM)**: fine to coarse-grained sand, gravel up to 1/3", non-plastic, gray, wet, dense, some low dilatancy inorganic silt	S-14		BC=12 17 29 36	20"								
340	50	**S-15: Silty SAND with some Gravel (SM)**: fine to coarse-grained sand, ¼" gravel, non-plastic, olive, wet, very dense, some low dilatancy inorganic silt	S-15		BC=18 31 26 18	15"								
335	55	**S-16:** similar to S-15, except medium dense	S-16		BC=8 9 9 11									Washed through boulder from 62.5 to 63.5 feet
330	60	**S-17:** similar to S-15, except fine to medium-grained sand, angular to sub-angular gravel, light brownish gray	S-17		BC=35 69 70 60	12"								
		suspect top of weathered rock at 62.5 feet												
325	65	**S-18:** no recovery	S-18		BC=75/0" RQD=83	98%								Core Run 64- 65 ft= 2 min 30 sec
		R-1: GNEISS: fine to medium-grained, dark bluish gray, slightly weathered, medium strong, moderately fractured sand seam at 65 feet	R-1											Core Run 65- 66 ft= 3 min Core Run 66- 67 ft= 3 min 30 sec Core Run 67- 68 ft= 3 min 40 sec
		white vein at 69 feet **R-2:** similar to R-1, except slightly fractured	R-2		RQD=86	100%								Core Run 68- 69 ft= 4 min Core Run 69- 70 ft= 4 min Core Run 70- 71 ft= 4 min Core Run 71- 72 ft= 4 min Core Run 72- 73 ft= 3 min Core Run 73- 74 ft= 5 min
320	70													
		white vein at 74 feet												
315	75	The boring was terminated at approximately 74 ft. below ground surface. The boring was backfilled with cuttings and patched at the surface with bituminous cold patch on February 27, 2018.												

GROUNDWATER LEVEL INFORMATION:
Groundwater was not noted during drilling due to introduction of water into the borehole.
GENERAL NOTES:
The exploration location and elevation are approximate and were estimated by Kleinfelder.

KLEINFELDER *Bright People. Right Solutions.*

PROJECT NO.:	20181590	BORING LOG BB-2	PLATE
DRAWN BY:	MAP		BB-2
CHECKED BY:	CAM	Ware Bridge Route 32 Ware, Massachusetts	
DATE:	4/4/2018		
REVISED:	7/23/2018		PAGE: 2 of 2

9/10/2022	ISSUED FOR CONSTRUCTION
DATE	DESCRIPTION

THIS SHEET IS APPROVED FOR CONSTRUCTION BY MASSDOT
AUTHORIZED SIGNATORY: STATE BRIDGE ENGINEER
USE ONLY PRINTS OF LATEST DATE

605126_BR3-11 BORING LOGS (W05015).DWG Plotted on 17-Sep-2022 10:28 PM
FINAL STRUCTURAL SUBMITTAL (SF) 19-AUGUST-2022

WARE
STATE ROUTE 32 (PALMER ROAD) OVER WARE RIVER

STATE	FED. AID PROJ. NO.	SHEET NO.	TOTAL SHEETS
MA	STP(BR-OFF)-003S(606)X	64	125
PROJECT FILE NO. 605126			

BORING LOGS AND NOTES
SHEET 3 OF 9

BORING NOTES:

1. LOCATION OF BORINGS SHOWN ON THE PLAN THUS:
2. SEE SHEET 3 FOR ADDITIONAL NOTES.

WEST ABUTMENT
BOTTOM OF PILE
CAP EL. 376.13'

Date Begin - End: 12/17/2019 - 12/18/2019 **Drilling Company:** New England Boring Contractors **BORING LOG BB-202**
Logged By: L. Wang **Drill Crew:** Matt & Nolan
Hor.-Vert. Datum: Not Available **Drilling Equipment:** ATV **Hammer Type - Drop:** 140 lb. Auto - 30 in.
Plunge: -90 degrees **Drilling Method:** Drive/Wash
Weather: Snow and Sunny **Exploration Diameter:** 4 in. O.D.

FIELD EXPLORATION — Northing: 2912927.83, Easting: 443320.46; Approximate Ground Surface Elevation (ft.): 380; Surface Condition: Exposed Topsoil

Approximate Elevation (feet)	Depth (feet)	Lithologic Description	Sample Number	Sample Type	Blow Counts/6in. Penetrat.Resist/0in. Pocket Pen/tsf RQD/%	Recovery (NR=No Recovery)	LABORATORY RESULTS: USCS Symbol	Water Content (%)	Dry Unit Wt. (pcf)	Passing #4 (%)	Passing #200 (%)	Liquid Limit	Plasticity Index (NP=Non-Plastic)	Additional Tests/ Remarks
		S-1: TOPSOIL: Silty SAND: fine-grained, some organic silt, dark brown to black, wet, very loose, trace roots	S-1		BC=WOH 1 1 2	14"								
		S-2: top 3": similar to S-1 **S-2:** bottom 18": similar to S-1 except some organic silt, reddish brown, moist	S-2		BC=WOH 2 3 4	21"								
		S-3: top 6": similar to S-1 except some organic silt, reddish brown, wet	S-3		BC=10 13 15 17	14"								
375	5	**S-3:** bottom 8": **Poorly Graded GRAVEL with some Sand (GP):** fine-grained gravel, some coarse-grained sand, trace inorganic silt, sub-angular to sub-rounded, wet, dense	S-4		BC=30 20 15 18	16"								
		S-4: top 4": **Poorly Graded GRAVEL with Sand (GP):** similar to bottom 8" of S-3	S-5		BC=12 20 20 17	24"	SP-SM			73	5.9			Drive casing
		S-4: bottom 12": **ALLUVIAL DEPOSITS: Poorly Graded SAND (SP):** medium to coarse-grained, trace gravel, gray, wet, dense **S-5: Poorly Graded SAND with trace Silt and Some Gravel (SP-SM):** fine to coarse-grained, fine-grained gravel, gray, wet, dense	S-6		BC=18 15 8 6	7"								
365	15	**S-6: Poorly Graded GRAVEL with some Sand (GP):** medium to coarse-grained gravel up to 1.5", some coarse-grained sand, sub-angular to sub-rounded, brownish gray, wet, medium dense												
		S-7: similar to S-6 except trace inorganic silt, brown	S-7		BC=9 8 9 21	9"								
360	20													
		S-8: top 3": **SAND (SP):** fine to coarse-grained, trace gravel, dark gray, wet, dense	S-8		BC=16 18 15 16	12"	SW-GM			37	6.4			
355	25	**S-8:** bottom 9": **Poorly Graded GRAVEL with trace Silt and Some Sand (GP-GM):** fine to coarse-grained, sub-angular to sub-rounded, fine to medium-grained sand, sub-angular to sub-rounded, yellowish brown, wet, dense	S-9		BC=4 7 8 8	10"								
		S-9: Poorly Graded SAND (SP): medium to coarse-grained, trace gravel, trace inorganic silt, brown, wet, medium dense												
350	30													
		S-10: No recovery	S-10		BC=2 3 4 6	NR								
345	35													
			S-11			7"								

KLEINFELDER *Bright People. Right Solutions.*

PROJECT NO.: 20181590	BORING LOG BB-202	PLATE
DRAWN BY: MAP	Ware Bridge Route 32 Ware, Massachusetts	BB-202
CHECKED BY: DD		
DATE: 1/14/2020		
REVISED: -		PAGE: 1 of 2

WEST ABUTMENT
HP PILES END BEARING ON BEDROCK,
APPROXIMATE PILE TIP EL. 325.00'

Date Begin - End: 12/17/2019 - 12/18/2019 **Drilling Company:** New England Boring Contractors **BORING LOG BB-202**
Logged By: L. Wang **Drill Crew:** Matt & Nolan
Hor.-Vert. Datum: Not Available **Drilling Equipment:** ATV **Hammer Type - Drop:** 140 lb. Auto - 30 in.
Plunge: -90 degrees **Drilling Method:** Drive/Wash
Weather: Snow and Sunny **Exploration Diameter:** 4 in. O.D.

FIELD EXPLORATION — Northing: 2912927.83, Easting: 443320.46; Approximate Ground Surface Elevation (ft.): 380; Surface Condition: Exposed Topsoil

Approximate Elevation (feet)	Depth (feet)	Lithologic Description	Sample Number	Sample Type	Blow Counts/6in. Penetrat.Resist/0in. Pocket Pen/tsf RQD/%	Recovery (NR=No Recovery)	LABORATORY RESULTS: USCS Symbol	Water Content (%)	Dry Unit Wt. (pcf)	Passing #4 (%)	Passing #200 (%)	Liquid Limit	Plasticity Index (NP=Non-Plastic)	Additional Tests/ Remarks
		S-11: similar to S-9 except fine to coarse-grained, gray, trace rock fragments at tip of spoon	S-11 (cont.)		BC=25 17 8 6	7" (cont.)								
335	45	**S-12:** similar to S-9 except medium-grained, gray	S-12		BC=7 22 33 62	12"								
330	50	**S-13: Poorly Graded SAND with some Gravel (SP):** fine to medium-grained, some gravel, trace inorganic silt, gray	S-13		BC=21 12/25"	5"								Roller bit from 50 to 54 feet.
		Probable Top of Rock												Observed rock fragments coming up in wash from 62.5 to 64 feet.
325	55													
320	60													
315	65													
310	70													
305	75													

The boring was terminated at approximately 54 ft. below ground surface. The boring was backfilled with cuttings on December 18, 2019.

GROUNDWATER LEVEL INFORMATION:
Groundwater was observed at approximately 2 ft. below ground surface during drilling.
GENERAL NOTES:
Refusal at approximately 50 ft. bgs.
The exploration location and elevation are approximate and were estimated by Kleinfelder.

KLEINFELDER *Bright People. Right Solutions.*

PROJECT NO.: 20181590	BORING LOG BB-202	PLATE
DRAWN BY: MAP	Ware Bridge Route 32 Ware, Massachusetts	BB-202
CHECKED BY: DD		
DATE: 1/14/2020		
REVISED: -		PAGE: 2 of 2

9/10/2022	ISSUED FOR CONSTRUCTION
DATE	DESCRIPTION

THIS SHEET IS APPROVED FOR CONSTRUCTION BY MASSDOT AUTHORIZED SIGNATORY: STATE BRIDGE ENGINEER
USE ONLY PRINTS OF LATEST DATE

605126_BR3-11 BORING LOGS (W05015).DWG Plotted on 17-Sep-2022 10:28 PM
FINAL STRUCTURAL SUBMITTAL (SF) 19-AUGUST-2022

WARE
STATE ROUTE 32 (PALMER ROAD) OVER WARE RIVER

STATE	FED. AID PROJ. NO.	SHEET NO.	TOTAL SHEETS
MA	STP(BR-OFF)-003S(606)X	65	125
PROJECT FILE NO. 605126			

BORING LOGS AND NOTES
SHEET 4 OF 9

BORING NOTES:

1. LOCATION OF BORINGS SHOWN ON THE PLAN THUS:
2. SEE SHEET 3 FOR ADDITIONAL NOTES.

PIER
BOTTOM OF PILE
CAP EL. 366.50'

BORING LOG BB-104

Date Begin - End:	5/21/2019	**Drilling Company:**	New England Boring Contractors
Logged By:	C. Miller	**Drill Crew:**	Mark & Cody
Hor.-Vert. Datum:	NAVD88	**Drilling Equipment:**	GT8 Geotech Drill
Plunge:	-90 degrees	**Drilling Method:**	Drive/Wash
Weather:	Sunny, 55° F	**Exploration Diameter:**	4.25 in. O.D.

Hammer Type - Drop: 140 lb. Auto - 30 in.

FIELD EXPLORATION / LABORATORY RESULTS

Northing: 2913008.6
Easting: 443348.85
Approximate Ground Surface Elevation (ft.): 391
Surface Condition: Bituminous Pavement

Approximate Elevation (feet)	Depth (feet)	Graphical Log	Lithologic Description	Sample Number	Sample Type	Blow Counts(6"-6"-6") Blows/6" Pocket Pen(PP)= tsf RQD=%	Recovery (NR=No Recovery)	USCS Symbol	Water Content (%)	Dry Unit Wt. (pcf)	Passing #200 (%)	Passing #4 (%)	Liquid Limit	Plasticity Index (NP=Non-Plastic)	Additional Tests/ Remarks
390			**BITUMINOUS PAVEMENT: 3"** / **CONCRETE: 7"** / Space below bridge deck and top of river bottom												Boring advanced from bridge deck
385	5														
380	10														
375	15														River level 15 feet below bridge deck
370	20														
365	25		**S-1: ALLUVIAL DEPOSITS: Poorly Graded SAND with some Gravel (SP)**: fine to coarse-grained, fine to coarse-grained sub-angular gravel, yellowish brown to olive brown, wet, medium dense	S-1		BC=3 4 9 8	11"	SP			63	3.0			Top of river bottom at 21.75 feet. Sampled S-1 with cable and winch. Remaining spoon samples driven with automatic hammer. / Drill rig grinding from 26 to 27 feet
360	30		**S-2: Poorly Graded SAND (SP)**: fine to medium-grained, yellowish brown to olive brown, wet, very loose, trace gravel	S-2		BC=WOH 1 2 4	14"								
355	35		**S-3: Poorly Graded SAND with trace Silt (SP-SM)**: fine to coarse-grained, trace fine-grained gravel, trace silt, olive brown, wet, medium dense, 2" dark brown layer	S-3		BC=6 8 7 8	13"	SP-SM			94	6.6			
				S-4			11"								

KLEINFELDER
Bright People. Right Solutions.

PROJECT NO.:	20181590	BORING LOG BB-104	PLATE
DRAWN BY:	MC		
CHECKED BY:	JM	Ware Bridge Route 32 Ware, Massachusetts	BB-104
DATE:	6/21/2019		
REVISED:	1/14/2020		PAGE: 1 of 2

PIER
HP PILES END BEARING ON BEDROCK,
APPROXIMATE PILE TIP EL. 325.00'

BORING LOG BB-104

Date Begin - End:	5/21/2019	**Drilling Company:**	New England Boring Contractors
Logged By:	C. Miller	**Drill Crew:**	Mark & Cody
Hor.-Vert. Datum:	NAVD88	**Drilling Equipment:**	GT8 Geotech Drill
Plunge:	-90 degrees	**Drilling Method:**	Drive/Wash
Weather:	Sunny, 55° F	**Exploration Diameter:**	4.25 in. O.D.

Hammer Type - Drop: 140 lb. Auto - 30 in.

FIELD EXPLORATION / LABORATORY RESULTS

Northing: 2913008.6
Easting: 443348.85
Approximate Ground Surface Elevation (ft.): 391
Surface Condition: Bituminous Pavement

Approximate Elevation (feet)	Depth (feet)	Graphical Log	Lithologic Description	Sample Number	Sample Type	Blow Counts(6"-6"-6") Blows/6" Pocket Pen(PP)= tsf RQD=%	Recovery (NR=No Recovery)	USCS Symbol	Water Content (%)	Dry Unit Wt. (pcf)	Passing #200 (%)	Passing #4 (%)	Liquid Limit	Plasticity Index (NP=Non-Plastic)	Additional Tests/ Remarks
350			**S-4:** Similar to S-3 except medium dense, olive brown to light brownish gray	S-4 (cont.)		BC=7 6 7 6	11" (cont.)								
345	45		**S-5:** Top 10": Similar to S-2 except fining with depth, fine to coarse-grained sand, loose / **S-5:** Bottom 4": **Silty SAND with some Gravel (SM)**: fine to coarse-grained, subrounded, light brownish gray to olive, wet, loose	S-5		BC=4 3 5 9	14"								Drill rig grinding from 43 to 44 feet / Presumed boulder from 48 to 51.5 feet based on drilling action
340	50		**S-6:** Similar to Bottom 4" of S-5 except medium dense	S-6		BC=9 10 14 8	10"								Observed metal fragments from bit in wash. Abandoned boring
335	55		The boring was terminated at approximately 53.5 ft. below ground surface. The boring was backfilled with cuttings and patched at the surface with concrete on May 21, 2019.												
330	60														
325	65														
320	70														
315	75														

GROUNDWATER LEVEL INFORMATION:
Groundwater was observed at approximately 15 ft. below ground surface during drilling.
GENERAL NOTES:
The exploration location and elevation are approximate and were estimated by Kleinfelder.

KLEINFELDER
Bright People. Right Solutions.

PROJECT NO.:	20181590	BORING LOG BB-104	PLATE
DRAWN BY:	MC		
CHECKED BY:	JM	Ware Bridge Route 32 Ware, Massachusetts	BB-104
DATE:	6/21/2019		
REVISED:	1/14/2020		PAGE: 2 of 2

9/10/2022	ISSUED FOR CONSTRUCTION
DATE	DESCRIPTION

THIS SHEET IS APPROVED FOR CONSTRUCTION BY MASSDOT
AUTHORIZED SIGNATORY: STATE BRIDGE ENGINEER
USE ONLY PRINTS OF LATEST DATE

605126_BR3-11 BORING LOGS (W05015).DWG Plotted on 17-Sep-2022 10:28 PM
FINAL STRUCTURAL SUBMITTAL (SF) 19-AUGUST-2022

WARE
STATE ROUTE 32 (PALMER ROAD) OVER WARE RIVER

STATE	FED. AID PROJ. NO.	SHEET NO.	TOTAL SHEETS
MA	STP(BR-OFF)-003S(606)X	66	125
PROJECT FILE NO.	605126		

BORING LOGS AND NOTES
SHEET 5 OF 9

BORING NOTES:

1. LOCATION OF BORINGS SHOWN ON THE PLAN THUS:
2. SEE SHEET 3 FOR ADDITIONAL NOTES.

PIER
BOTTOM OF PILE
CAP EL. 366.50'

Date Begin - End: 5/22/2019 - 5/24/2019 | **Drilling Company:** New England Boring Contractors | **BORING LOG BB-104A**
Logged By: M. Chea | **Drill Crew:** Mark & Cody
Hor.-Vert. Datum: NAVD88 | **Drilling Equipment:** GT8 Geotech Drill | **Hammer Type - Drop:** 140 lb. Auto - 30 in.
Plunge: -90 degrees | **Drilling Method:** Drive/Wash
Weather: Sunny, 55° F | **Exploration Diameter:** 4.25 in. O.D.

FIELD EXPLORATION — Northing: 2913011.05; Easting: 443352.2; Approximate Ground Surface Elevation (ft.): 391; Surface Condition: Bituminous Pavement

LABORATORY RESULTS

Approximate Elevation (feet)	Depth (feet)	Graphical Log	Lithologic Description	Sample Number	Sample Type	Blow Counts(6"in 6" Increments) Pocket Pen(PP)= tsf RQD=%	Recovery (NR=No Recovery)	USCS Symbol	Water Content (%)	Dry Unit Wt. (pcf)	Passing #4 (%)	Passing #200 (%)	Liquid Limit	Plasticity Index (NP=Non-Plastic)	Additional Tests/ Remarks
390			**BITUMINOUS PAVEMENT: 3"** / **CONCRETE: 7"**												Boring advanced from bridge deck
			Space below bridge deck and top of river bottom												
385	5														
380	10														
375	15														River level about 15 feet below bridge deck
370	20														
			Advanced 4" casing to 45 feet without sampling. See boring BB-104 for sample descriptions.												Top of river bottom at 22 feet
365	25														
360	30														
355	35														Drill rig chattered from 35 to 38 feet. Observed rock fragements in drill cuttings

KLEINFELDER *Bright People. Right Solutions.*

PROJECT NO.: 20181590	BORING LOG BB-104A	PLATE
DRAWN BY: MC	Ware Bridge Route 32 Ware, Massachusetts	BB-104A
CHECKED BY: JM		
DATE: 6/21/2019		
REVISED: 1/14/2020		PAGE: 1 of 2

PIER
HP PILES END BEARING ON BEDROCK,
APPROXIMATE PILE TIP EL. 325.00'

Date Begin - End: 5/22/2019 - 5/24/2019 | **Drilling Company:** New England Boring Contractors | **BORING LOG BB-104A**
Logged By: M. Chea | **Drill Crew:** Mark & Cody
Hor.-Vert. Datum: NAVD88 | **Drilling Equipment:** GT8 Geotech Drill | **Hammer Type - Drop:** 140 lb. Auto - 30 in.
Plunge: -90 degrees | **Drilling Method:** Drive/Wash
Weather: Sunny, 55° F | **Exploration Diameter:** 4.25 in. O.D.

FIELD EXPLORATION — Northing: 2913011.05; Easting: 443352.2; Approximate Ground Surface Elevation (ft.): 391; Surface Condition: Bituminous Pavement

LABORATORY RESULTS

Approximate Elevation (feet)	Depth (feet)	Graphical Log	Lithologic Description	Sample Number	Sample Type	Blow Counts(6"in 6" Increments) Pocket Pen(PP)= tsf RQD=%	Recovery (NR=No Recovery)	USCS Symbol	Water Content (%)	Dry Unit Wt. (pcf)	Passing #4 (%)	Passing #200 (%)	Liquid Limit	Plasticity Index (NP=Non-Plastic)	Additional Tests/ Remarks
350															
345	45		**S-1: Poorly Graded SAND with some Gravel (SP):** fine to coarse-grained, brown, wet, medium dense, some fine-grained subrounded gravel	S-1		BC=7 7 5 6	14"								
			Assumed lithology change												
340	50		**S-2: Silty SAND with some Gravel (SM):** fine to medium-grained, brown, wet, dense, some fine-grained subrounded gravel	S-2		BC=11 16 19 22	13"								
			Assumed lithology change												
335	55		**S-3: Poorly Graded SAND with some Silt and some Gravel (SP-SM):** fine-grained, brown to dark gray, wet, very dense, some fine-grained gravel, angular rock fragments	S-3		BC=40 70 71	12"								Angular rock fragment at tip of spoon. Possible cobble or boulder
			Assumed lithology change												
330	60		**S-4: Silty SAND (SM):** fine to medium-grained, light gray, wet, very dense, little fine-grained gravel	S-4		BC=62 70/3"	8"								
325	65		**R-1: GNEISS:** fine-grained, dark blulsh gray, slightly weathered, strong, slightly to moderately fractured	R-1		RQD=81	98%								Roller bit to 64 feet. Observed rock fragments in drill cuttings R-1 Coring rates: 64.5- 65.5 ft = 4.4min 65.5- 66.5 ft = 3min 66.5- 67.5 ft = 3.4min 67.5- 68.5 ft = 3.8min 68.5- 69.5 ft = 4.5min
320	70		**R-2:** Similar to R-1	R-2		RQD=78	82%								R-2 Coring rates: 69.5- 70.5 ft = 4.8min 70.5- 71.5 ft = 3.3min 71.5- 72.5 ft = 5.5min 72.5- 73.5 ft = 3.0min 73.5- 74.5 ft = 2.8min
315	75		The boring was terminated at approximately 74.5 ft. below ground surface. The boring was backfilled with cuttings and patched at the surface with concrete on May 22, 2019.												

GROUNDWATER LEVEL INFORMATION:
Groundwater was observed at approximately 15 ft. below ground surface during drilling.
GENERAL NOTES:
The exploration location and elevation are approximate and were estimated by Kleinfelder.

KLEINFELDER *Bright People. Right Solutions.*

PROJECT NO.: 20181590	BORING LOG BB-104A	PLATE
DRAWN BY: MC	Ware Bridge Route 32 Ware, Massachusetts	BB-104A
CHECKED BY: JM		
DATE: 6/21/2019		
REVISED: 1/14/2020		PAGE: 2 of 2

9/10/2022	ISSUED FOR CONSTRUCTION
DATE	DESCRIPTION

THIS SHEET IS APPROVED FOR CONSTRUCTION BY MASSDOT
AUTHORIZED SIGNATORY: STATE BRIDGE ENGINEER
USE ONLY PRINTS OF LATEST DATE

605126_BR3-11 BORING LOGS (W05015).DWG Plotted on 17-Sep-2022 10:28 PM
FINAL STRUCTURAL SUBMITTAL (SF) 19-AUGUST-2022

WARE
STATE ROUTE 32 (PALMER ROAD) OVER WARE RIVER

STATE	FED. AID PROJ. NO.	SHEET NO.	TOTAL SHEETS
MA	STP(BR-OFF)-003S(606)X	67	125
PROJECT FILE NO. 605126			

BORING LOGS AND NOTES
SHEET 6 OF 9

BORING NOTES:

1. LOCATION OF BORINGS SHOWN ON THE PLAN THUS:
2. SEE SHEET 3 FOR ADDITIONAL NOTES.

PIER
BOTTOM OF PILE
CAP EL. 366.50'

Date Begin - End: 5/15/2019 - 5/19/2019 **Drilling Company:** New England Boring Contractors **BORING LOG BB-103**
Logged By: C. Miller/ D. Dwyer **Drill Crew:** Mark & Cody
Hor.-Vert. Datum: NAVD88 **Drilling Equipment:** GT8 Geotech Drill **Hammer Type - Drop:** 140 lb. Auto - 30 in.
Plunge: -90 degrees **Drilling Method:** Drive/Wash
Weather: Partly Cloudy, 50° F **Exploration Diameter:** 4.25 in. O.D.

Northing: 2913015.23
Easting: 443382.92
Approximate Ground Surface Elevation (ft.): 391
Surface Condition: Bituminous Pavement

Approximate Elevation (feet)	Depth (feet)	Lithologic Description	Sample Number	Sample Type	Blow Counts(6"-6"-6") Penetration Resistance (N-Value) Powder Post(PP)= tsf RQD=%	Recovery (NR=No Recovery)	USCS Symbol	Water Content (%)	Dry Unit Wt. (pcf)	Passing #200 (%)	Passing #4 (%)	Liquid Limit	Plasticity Index (NP=Non-Plastic)	Additional Tests/ Remarks
390		**BITUMINOUS PAVEMENT: 2.5"** **CONCRETE: 5.5"** Space below bridge deck and top of river bottom												Boring advanced from bridge deck.
385	5													
380	10													
375	15													Top of river at 15.3 feet below bridge deck
370	20													
365	25	**S-1: ALLUVIAL DEPOSITS: Poorly Graded GRAVEL and SAND (GP)**: fine-grained, fine to coarse-grained sand, subrounded, brown to black, wet, medium dense, trace fines	S-1		BC=22 12 8 12	8"	GP			48	4.6			Top of river bottom at 23.5 feet Sampled S-1 with safety hammer on winch. Remaining spoon samples driven with automatic hammer.
360	30	Assumed lithology change based on drilling action and cuttings **S-2: Poorly Graded SAND (SP)**: fine to coarse-grained, predominantly medium-grained, subrounded to rounded, brown, wet, loose	S-2		BC=3 3 4 4	12"								
355	35	**S-3: Poorly Graded SAND with trace Silt (SP-SM)**: fine to coarse-grained, trace fine-grained gravel, trace silt, brown, wet, loose	S-3		BC=5 3 4 4	11"	SP-SM			87	5.1			

KLEINFELDER Bright People. Right Solutions.

PROJECT NO.: 20181590	BORING LOG BB-103	PLATE
DRAWN BY: MC		
CHECKED BY: JM	Ware Bridge Route 32 Ware, Massachusetts	BB-103
DATE: 6/21/2019		
REVISED: 1/14/2020		PAGE: 1 of 2

PIER
HP PILES END BEARING ON BEDROCK,
APPROXIMATE PILE TIP EL. 325.00'

Date Begin - End: 5/15/2019 - 5/19/2019 **Drilling Company:** New England Boring Contractors **BORING LOG BB-103**
Logged By: C. Miller/ D. Dwyer **Drill Crew:** Mark & Cody
Hor.-Vert. Datum: NAVD88 **Drilling Equipment:** GT8 Geotech Drill **Hammer Type - Drop:** 140 lb. Auto - 30 in.
Plunge: -90 degrees **Drilling Method:** Drive/Wash
Weather: Partly Cloudy, 50° F **Exploration Diameter:** 4.25 in. O.D.

Northing: 2913015.23
Easting: 443382.92
Approximate Ground Surface Elevation (ft.): 391
Surface Condition: Bituminous Pavement

Approximate Elevation (feet)	Depth (feet)	Lithologic Description	Sample Number	Sample Type	Blow Counts(6"-6"-6") Penetration Resistance (N-Value) Powder Post(PP)= tsf RQD=%	Recovery (NR=No Recovery)	USCS Symbol	Water Content (%)	Dry Unit Wt. (pcf)	Passing #200 (%)	Passing #4 (%)	Liquid Limit	Plasticity Index (NP=Non-Plastic)	Additional Tests/ Remarks
350		**S-4: Poorly Graded SAND (SP)**: fine to coarse-grained, predominantly medium to coarse grained, more gravel, brown, wet, medium dense	S-4		BC=3 9 10 13	4"								
345	45	**S-5**: Similar to S-4 except with 2" weathered gravel at 46.5 feet, light brownish gray to dark red	S-5		BC=8 7 6 5	13"								Coarsening with depth based on drilling action and cuttings
340	50	Assumed lithology change **S-6: Silty SAND with Gravel (SM)**: fine to coarse-grained, subrounded, light brownish gray, wet, medium dense, gravel up to 1/2", weathered gravel (dark red), iron staining	S-6		BC=18 16 13 12	10"								
335	55	Assumed lithology change **S-7**: Top 18": **Poorly Graded SAND (SP)**: predominantly medium-grained sand in top 10", predominantly coarse-grained sand in bottom 8", subrounded to rounded, light brownish gray, wet, medium dense	S-7		BC=25 14 10 14	24"								Drill rig grinding intermittently on presumed gravel or cobbles from 54.5 to 60 feet
330	60	**S-7**: Bottom 6": **Silty SAND with some Gravel (SM)**: fine to coarse-grained, subangular to subrounded, light brownish gray, wet, medium dense, angular to subangular gravel up to 1/2"	S-8		BC=21 81 43/2"	8"								
325	65	**S-8**: Similar to Bottom 6" of S-7 except very dense **R-1: GNEISS**: fine to medium-grained, light gray, iron oxide staining, strong, moderately fractured, near vertical banding	R-1		RQD=99	100%								Roller bit refusal at 61.5 feet R-1 Coring rates: 62.0- 63.0 ft = 4min 24sec 63.0- 64.0 ft = 3min 64.0- 65.0 ft = 3min 57sec 66.0- 66.6 ft = 3min 52sec
320	70	**R-2**: Similar to R-1, medium strong **R-3**: Similar to R-1 except slightly fractured	R-2 R-3		RQD=73 RQD=100	100% 100%								R-2 Coring rate: 65.5- 66.0 ft = 3min 38sec R-3 Coring rates: 66.0- 67.0 ft = 4min 23sec 67.0- 68.0 ft = 5min 58sec 68.0- 69.0 ft = 5min 15sec 69.0- 70.0 ft = 4min 58sec 70.0- 71.0 ft = 2min 59sec
315	75	**R-4**: Similar to R-1	R-4		RQD=100	100%								R-4 Coring rate: 71.0- 72.0 ft = 4min 35sec

The boring was terminated at approximately 72 ft. below ground surface. The boring was backfilled with cuttings and patched at the surface with concrete on May 15, 2019.

GROUNDWATER LEVEL INFORMATION:
NE Groundwater was observed at approximately 15.5 ft. below ground surface during drilling.
GENERAL NOTES:
The exploration location and elevation are approximate and were estimated by Kleinfelder.

KLEINFELDER Bright People. Right Solutions.

PROJECT NO.: 20181590	BORING LOG BB-103	PLATE
DRAWN BY: MC		
CHECKED BY: JM	Ware Bridge Route 32 Ware, Massachusetts	BB-103
DATE: 6/21/2019		
REVISED: 1/14/2020		PAGE: 2 of 2

9/10/2022	ISSUED FOR CONSTRUCTION
DATE	DESCRIPTION

THIS SHEET IS APPROVED FOR CONSTRUCTION BY MASSDOT
AUTHORIZED SIGNATORY: STATE BRIDGE ENGINEER
USE ONLY PRINTS OF LATEST DATE

605126_BR3-11 BORING LOGS (W05015).DWG Plotted on 17-Sep-2022 10:28 PM
FINAL STRUCTURAL SUBMITTAL (SF) 19-AUGUST-2022

WARE
STATE ROUTE 32 (PALMER ROAD) OVER WARE RIVER

STATE	FED. AID PROJ. NO.	SHEET NO.	TOTAL SHEETS
MA	STP(BR-OFF)-003S(606)X	68	125
PROJECT FILE NO. 605126			

BORING LOGS AND NOTES
SHEET 7 OF 9

BORING NOTES:

1. LOCATION OF BORINGS SHOWN ON THE PLAN THUS:
2. SEE SHEET 3 FOR ADDITIONAL NOTES.

EAST ABUTMENT
BOTTOM OF PILE
CAP EL. 377.79'

BORING LOG BB-1

Date Begin - End: 2/15/2018 - 2/23/2018	**Drilling Company:** Northern Drilling		
Logged By: RDC	**Drill Crew:** Carl & John		
Hor.-Vert. Datum: NAVD88	**Drilling Equipment:** Mobile B-57	**Hammer Type - Drop:** 140 lb. Auto - 30 in.	
Plunge: -90 degrees	**Drilling Method:** Drive/Wash		
Weather: Overcast, 30° F	**Exploration Diameter:** 5 in. O.D.		

FIELD EXPLORATION — Northing: 2913065.43; Easting: 443423.47; Approximate Ground Surface Elevation (ft.): 391; Surface Condition: Bituminous Pavement

Approximate Elevation (feet)	Depth (feet)	Lithologic Description	Sample Number	Sample Type	Blow Counts(6"): Pocket Pen(PP)= tsf RQD=%	Recovery (NR=No Recovery)	USCS Symbol	Water Content (%)	Dry Unit Wt. (pcf)	Passing #4 (%)	Passing #200 (%)	Liquid Limit	Plasticity Index (NP=Non-Plastic)	Additional Tests/ Remarks
		BITUMINOUS PAVEMENT: 6"												
390		**S-1: FILL: Poorly Graded SAND and Gravel with some Silt (SP-SM)**: fine to medium-grained sand, angular to sub-angular gravel, non-plastic, brown, dry, medium dense	S-1		BC=10 22 17	10"								
		S-2: similar to S-1	S-2		BC=13 12 13	16"								
	5	**S-3:** similar to S-1, except light brownish gray	S-3		BC=12 13 19	12"	SP-SM			54	7.5			
385		**S-4:** similar to S-1, except yellowish brown	S-4		BC=12 12 8	13"								
		S-5: Poorly-Graded GRAVEL (GP): non-plastic, dry, medium dense	S-5		BC=19 22 13 7	11"								
	10	**S-6: Poorly-Graded GRAVEL with some Sand (GP)**: coarse-grained gravel, fine to medium-grained sand, non-plastic, brown, dry, very dense	S-6		BC=11 8 5 11	13"								Rough rollerbitting from 9 to 10 feet, possible boulder
		S-7: top 13" **Poorly-Graded GRAVEL with some inorganic Silt and some Sand (GP-GM)**: fine to medium-grained sand, angular to sub-angular gravel, non-plastic, brown, dry, medium dense	S-7		BC=11 64 17 20	17"								
380		**S-7:** bottom 4" **PEAT (PT)**: non-plastic, black to dark brown, moist, organic roots and fibers, trace sand	S-8		BC=15 9 6 7	14"								
	15	**S-8: Sandy SILT/PEAT (ML)**: uniform fine-grained sand, some non-plastic organic fines, non-plastic, olive brown, moist, soft, some sand			BC=3 2 1 3									
		S-9: ALLUVIAL DEPOSITS: Poorly Graded SAND with some Gravel (SP): fine to coarse-grained sand, sub-angular to sub-rounded gravel, non-plastic, yellowish brown, wet, very dense	S-9		BC=3 19 21 13	11"								
	20	**S-10:** similar to S-9, except light brownish gray, dense	S-10		BC=19 21 15 13	9"								Possible boulder from 22.5 to 23.5 feet
	25	**S-11:** similar to S-9, except light brownish gray and loose	S-11		BC=3 5 4 7	16"								
	30	**S-12:** similar to S-9, except fine to medium-grained sand, light brownish gray, medium dense	S-12		BC=4 5 5 5	10"								
	35		S-13			13"	SW-SM			92	8.1			

KLEINFELDER *Bright People. Right Solutions.*

PROJECT NO.: 20181590	BORING LOG BB-1		PLATE
DRAWN BY: MAP			
CHECKED BY: CAM	Ware Bridge Route 32 Ware, Massachusetts		BB-1
DATE: 4/4/2018			
REVISED: 7/23/2018			PAGE: 1 of 2

EAST ABUTMENT
HP PILES END BEARING ON BEDROCK,
APPROXIMATE PILE TIP EL. 325.00'

BORING LOG BB-1

Date Begin - End: 2/15/2018 - 2/23/2018	**Drilling Company:** Northern Drilling		
Logged By: RDC	**Drill Crew:** Carl & John		
Hor.-Vert. Datum: NAVD88	**Drilling Equipment:** Mobile B-57	**Hammer Type - Drop:** 140 lb. Auto - 30 in.	
Plunge: -90 degrees	**Drilling Method:** Drive/Wash		
Weather: Overcast, 30° F	**Exploration Diameter:** 5 in. O.D.		

FIELD EXPLORATION — Northing: 2913065.43; Easting: 443423.47; Approximate Ground Surface Elevation (ft.): 391; Surface Condition: Bituminous Pavement

Approximate Elevation (feet)	Depth (feet)	Lithologic Description	Sample Number	Sample Type	Blow Counts(6"): Pocket Pen(PP)= tsf RQD=%	Recovery (NR=No Recovery)	USCS Symbol	Water Content (%)	Dry Unit Wt. (pcf)	Passing #4 (%)	Passing #200 (%)	Liquid Limit	Plasticity Index (NP=Non-Plastic)	Additional Tests/ Remarks
350		**S-13:** similar to S-9, except trace sub-rounded gravel <0.75", fine to medium-grained sand, light brownish gray, medium dense	S-13 (cont.)		BC=1 15 10 12	13" (cont.)								Driller observed possible change between 41.5 and 42 ft based on decreased drill rate
	45	**S-14: Poorly Graded SAND with trace inorganic Silt (SP-SM)**: fine to medium-grained sand, sub-rounded gravel, non-plastic, light brownish gray, wet, medium dense	S-14		BC=8 8 5 9	11"								
345		**S-15:** similar to S-14	S-15		BC=10 11 9 9	6"								
	50	**S-16:** similar to S-14, except with angular to sub-angular gravel, dense	S-16		BC=13 16 16 31	13"								
340														
	55													
335														
	60													
330														
	65	**R-1: GNEISS**: fine to medium-grained, dark bluish gray, slightly weathered, medium strong, slightly fractured	R-1		RQD=72	80%								Core Run 65- 66 ft= 4 min 34 sec; Core Run 66- 67 ft= 4 min 20 sec; Core Run 67- 68 ft= 3 min 14 sec; Core Run 68- 69 ft= 3 min 7 sec; Core Run 69 ft- 70 ft= 3 min 26 sec; Core Run 70- 71 ft= 11 min 34 sec; Core Run 71- 72 ft= 6 min; Core Run 72- 73 ft= 5 min; Core Run 73- 74 ft= 5 min; Core Run 74- 75 ft= 3 min
325		**R-2:** similar to R-1, except moderately fractured	R-2		RQD=33	83%								
	70	**R-3:** similar to R-1, except highly fractured, with vertical fracture and white vein	R-3		RQD=48	56%								
320														
	75													
315		The boring was terminated at approximately 75 ft. below ground surface. The boring was backfilled with cuttings and patched at the surface with bituminous cold patch on February 23, 2018.												

GROUNDWATER LEVEL INFORMATION:
Groundwater was observed at approximately 16 ft. below ground surface during drilling.
GENERAL NOTES:
The exploration location and elevation are approximate and were estimated by Kleinfelder.

KLEINFELDER *Bright People. Right Solutions.*

PROJECT NO.: 20181590	BORING LOG BB-1		PLATE
DRAWN BY: MAP			
CHECKED BY: CAM	Ware Bridge Route 32 Ware, Massachusetts		BB-1
DATE: 4/4/2018			
REVISED: 7/23/2018			PAGE: 2 of 2

9/10/2022	ISSUED FOR CONSTRUCTION
DATE	DESCRIPTION

THIS SHEET IS APPROVED FOR CONSTRUCTION BY MASSDOT
AUTHORIZED SIGNATORY: STATE BRIDGE ENGINEER
USE ONLY PRINTS OF LATEST DATE

605126_BR3-11 BORING LOGS (W05015).DWG Plotted on 17-Sep-2022 10:28 PM
FINAL STRUCTURAL SUBMITTAL (SF) 19-AUGUST-2022

WARE
STATE ROUTE 32 (PALMER ROAD) OVER WARE RIVER

STATE	FED. AID PROJ. NO.	SHEET NO.	TOTAL SHEETS
MA	STP(BR-OFF)-003S(606)X	69	125
PROJECT FILE NO.	605126		

BORING LOGS AND NOTES
SHEET 8 OF 9

BORING NOTES:

1. LOCATION OF BORINGS SHOWN ON THE PLAN THUS:
2. SEE SHEET 3 FOR ADDITIONAL NOTES.

EAST ABUTMENT
BOTTOM OF PILE
CAP EL. 377.79'

Date Begin - End: 5/13/2019 - 5/14/2019 **Drilling Company:** New England Boring Contractors **BORING LOG BB-101**
Logged By: C. Miller **Drill Crew:** Mark & Cody
Hor.-Vert. Datum: NAVD88 **Drilling Equipment:** GT8 Geotech Drill **Hammer Type - Drop:** 140 lb. Auto - 30 in.
Plunge: -90 degrees **Drilling Method:** Drive/Wash
Weather: Cloudy, 50° F **Exploration Diameter:** 4.25 in. O.D.

FIELD EXPLORATION — Northing: 2913048.1, Easting: 443438.77, Approximate Ground Surface Elevation (ft.): 390, Surface Condition: Bituminous Pavement

LABORATORY RESULTS

Approximate Elevation (feet)	Depth (feet)	Lithologic Description	Sample Number	Sample Type	Blow Counts(6"): Blows to Penetrate 6" Pocket Pen(PP)= tsf RQD=%	Recovery (NR=No Recovery)	USCS Symbol	Water Content (%)	Dry Unit Wt. (pcf)	Passing #4 (%)	Passing #200 (%)	Liquid Limit	Plasticity Index (NP=Non-Plastic)	Additional Tests/ Remarks
		BITUMINOUS PAVEMENT:1"												Augered down 2 feet due to obstruction below surface
385	5	**S-1: FILL: Silty SAND with some Gravel (SM):** fine to coarse-grained, subrounded to subangular, yellowish brown, moist, medium dense, gravel up to 1", granite fragment in upper 2" from presumed boulder or bridge support	S-1		BC=10 7 5 5	8"								
		S-2: Presumed similar to S-1, gravel in shoe of sampler	S-2		BC=16 9 8 6	2"								
		S-3: Similar to S-1 except with bituminous pavement	S-3		BC=8 7 13 11	9"								
380	10	**S-4: Silty SAND with some Gravel (SM):** fine to coarse-grained, predominantly medium-grained, light brownish gray, dense	S-4		BC=10 15 21 16	7"								
375	15	**S-5: Silty SAND with Gravel (SM):** fine to coarse-grained, light brown to yellowish brown, loose, gravel up to 1/2"	S-5		BC=6 6 4 3	4"								
														Presumed tree root observed in drill wash at 17 feet
370	20	**S-6:** Top 3": **ALLUVIAL DEPOSITS: Poorly Graded SAND (SP):** fine-grained, subrounded, yellowish brown, medium dense **S-6:** Bottom 7": **Silty SAND with some Gravel (SM):** fine to coarse-grained, yellowish brown, medium dense, minimal iron staining	S-6		BC=4 11 18 18	10"								
365	25	**S-7:** Top 2": **SILT (ML):** low plasticity, gray, minor sand, iron staining, medium dilatancy **S-7:** Bottom 15": **Poorly Graded SAND (SP):** fine to coarse-grained, predominantly medium-grained, subrounded, gray, loose	S-7		BC=5 5 3 1	17"								Maintained a positive head on the hole
360	30	**S-8: Poorly Graded SAND (SP):** fine to medium-grained, trace fine-grained gravel, gray, loose	S-8		BC=7 3 5 4	17"	SP			98	4.5			
355	35	**S-9:** Similar to S-8 except medium to coarse-grained sand	S-9		BC=4 4 4 4	1"								
			S-10			18"								

KLEINFELDER *Bright People. Right Solutions.*

PROJECT NO.: 20181590 | DRAWN BY: MC | CHECKED BY: JM | DATE: 6/21/2019 | REVISED: 1/14/2020

BORING LOG BB-101 — Ware Bridge, Route 32, Ware, Massachusetts

PLATE BB-101 — PAGE: 1 of 2

EAST ABUTMENT
HP PILES END BEARING ON BEDROCK,
APPROXIMATE PILE TIP EL. 325.00'

Date Begin - End: 5/13/2019 - 5/14/2019 **Drilling Company:** New England Boring Contractors **BORING LOG BB-101**
Logged By: C. Miller **Drill Crew:** Mark & Cody
Hor.-Vert. Datum: NAVD88 **Drilling Equipment:** GT8 Geotech Drill **Hammer Type - Drop:** 140 lb. Auto - 30 in.
Plunge: -90 degrees **Drilling Method:** Drive/Wash
Weather: Cloudy, 50° F **Exploration Diameter:** 4.25 in. O.D.

FIELD EXPLORATION — Northing: 2913048.1, Easting: 443438.77, Approximate Ground Surface Elevation (ft.): 390, Surface Condition: Bituminous Pavement

LABORATORY RESULTS

Approximate Elevation (feet)	Depth (feet)	Lithologic Description	Sample Number	Sample Type	Blow Counts(6"): Blows to Penetrate 6" Pocket Pen(PP)= tsf RQD=%	Recovery (NR=No Recovery)	USCS Symbol	Water Content (%)	Dry Unit Wt. (pcf)	Passing #4 (%)	Passing #200 (%)	Liquid Limit	Plasticity Index (NP=Non-Plastic)	Additional Tests/ Remarks
		S-10: Similar to S-8 except with alternating bands of fine to medium-grained gray sand and medium to coarse-grained olive yellow sand, medium dense	S-10 (cont.)		BC=5 10 11 16	18" (cont.)								
345	45	**S-11:** Alternating: Silty Sand, poorly graded sand, and sandy silt: fine to coarse-grained, gray to olive, layers alternated in 1-2" intervals, some subrounded gravel up 1/2", medium dense	S-11		BC=9 10 13 10	7"								
340	50	**S-12: Silty SAND with Gravel (SM):** fine to coarse-grained, gravel up to 1/2", olive to black, wet, dense, white gravel from 51.8 to 52 feet	S-12		BC=14 10 24 18	10"	SM			71	16			Drill rig grinding at 50 feet
335	55	**S-13:** Similar to S-12 except without white gravel	S-13		BC=10 20 14 22	11"								
														Drill rate decreased from 58 to 60 feet due to possible cobbles
330	60	**S-14:** Similar to S-12 except olive to gray, less silt, very dense	S-14		BC=49 76 81 50/2"	16"								
325	65	Probable Top of Rock **S-15:** No Recovery	S-15		BC=75/0"	NR								Drill rig grinding at 64 feet Spoon bouncing at 65 feet Roller bit from 65 to 66.3 feet to bedrock.
320	70													
315	75													

The boring was terminated at approximately 66.3 ft. below ground surface after encountering bedrock. The boring was backfilled with cuttings and patched at the surface with concrete on May 13, 2019.

GROUNDWATER LEVEL INFORMATION:
Groundwater was observed at approximately 16 ft. below ground surface during drilling.
GENERAL NOTES:
No rock core was taken in boring BB-101 since the top of rock was similar to boring BB-1.
The exploration location and elevation are approximate and were estimated by Kleinfelder.

KLEINFELDER *Bright People. Right Solutions.*

PROJECT NO.: 20181590 | DRAWN BY: MC | CHECKED BY: JM | DATE: 6/21/2019 | REVISED: 1/14/2020

BORING LOG BB-101 — Ware Bridge, Route 32, Ware, Massachusetts

PLATE BB-101 — PAGE: 2 of 2

9/10/2022	ISSUED FOR CONSTRUCTION
DATE	DESCRIPTION

THIS SHEET IS APPROVED FOR CONSTRUCTION BY MASSDOT AUTHORIZED SIGNATORY: STATE BRIDGE ENGINEER

USE ONLY PRINTS OF LATEST DATE

605126_BR3-11 BORING LOGS (W05015).DWG Plotted on 17-Sep-2022 10:28 PM
FINAL STRUCTURAL SUBMITTAL (SF) 19-AUGUST-2022

WARE
STATE ROUTE 32 (PALMER ROAD) OVER WARE RIVER

STATE	FED. AID PROJ. NO.	SHEET NO.	TOTAL SHEETS
MA	STP(BR-OFF)-003S(606)X	70	125
PROJECT FILE NO. 605126			

BORING LOGS AND NOTES
SHEET 9 OF 9

BORING NOTES:

1. LOCATION OF BORINGS SHOWN ON THE PLAN THUS:
2. SEE SHEET 3 FOR ADDITIONAL NOTES.

EAST ABUTMENT
BOTTOM OF PILE
CAP EL. 377.79'

BORING LOG BB-201

Date Begin - End: 12/13/2019 - 12/16/2019 **Drilling Company:** New England Boring Contractors
Logged By: L. Wang **Drill Crew:** Matt & Nolan
Hor.-Vert. Datum: Not Available **Drilling Equipment:** ATV **Hammer Type - Drop:** 140 lb. Auto - 30 in.
Plunge: -90 degrees **Drilling Method:** Drive/Wash
Weather: Sunny and Cloudy **Exploration Diameter:** 4 in. O.D.

FIELD EXPLORATION — Northing: 2913032.77, Easting: 443494.98; Approximate Ground Surface Elevation (ft.): 382; Surface Condition: Exposed Topsoil

Approximate Elevation (feet)	Depth (feet)	Lithologic Description	Sample Number	Sample Type	Blow Counts(6"-6"-6") Penetrat.Resist(N)*Hammer Eff. RQD(%)	Recovery (Inches)	USCS Symbol	Water Content (%)	Dry Unit Wt. (pcf)	Passing #4 (%)	Passing #200 (%)	Liquid Limit	Plasticity Index (NP=Non-Plastic)	Additional Tests/ Remarks
		S-1: TOPSOIL: Silty SAND: fine-grained, some organic silt, trace gravel, dark brown, very loose, trace roots	S-1	BC	3 2 1 1	14"								Ground was frozen
		S-2: top 16": similar to S-1 except reddish brown	S-2	BC	WOH 6 4 7	17"								
		S-2: bottom 1" **Poorly Graded SAND (SP)**: medium-grained, gray, medium dense, trace roots	S-3	BC	5 13 40 48	20"								
		S-3: top 12": similar to bottom 1" of S-2 except trace inorganic silt, wet, very dense	S-4	BC	19 19 21 15	16"								
		S-3: bottom 8": **Poorly Graded SAND with some Gravel (SP)**: coarse-grained, some gravel up to 1.5", trace inorganic silt, brown, wet, very dense	S-5	BC	3 3 3 2	13"								
		S-4: top 6": **ALLUVIAL DEPOSITS: Poorly Graded SAND (SP)**: fine to medium-grained, reddish brown, wet, dense												
		S-4: bottom 10": similar to bottom 8" of S-3												
		S-5: similar to top 6" of S-4 except trace gravel, loose												
		S-6: Poorly Graded GRAVEL (GP): fine-grained, some coarse-grained sand, angular to sub-angular, wet, very dense	S-6	BC	35 31 30 25	14"								
		S-7: Poorly Graded SAND with some Gravel (SP): medium to coarse-grained, sub-angular to sub-rounded, light brown, wet, medium dense, trace quartz fragments	S-7	BC	12 9 7 6	10"								
		S-8: Poorly Graded GRAVEL with some Sand (GP): fine to medium-grained, some coarse-grained sand, angular to rounded, wet, dense	S-8	BC	18 22 20 22	7"								
		S-9: Silty SAND (SM): fine-grained, trace coarse-grained sand, some inorganic silt, light gray, wet, loose	S-9	BC	3 3 3 5	7"								
		S-10: Poorly Graded SAND (SP) fine to medium-grained, trace fine-grained gravel, light gray, wet, loose	S-10	BC	2 2 3 3	8"	SP			93	3.2			
			S-11			11"								

KLEINFELDER *Bright People. Right Solutions.*

PROJECT NO.: 20181590	BORING LOG BB-201	PLATE	
DRAWN BY: MAP	Ware Bridge Route 32 Ware, Massachusetts	BB-201	
CHECKED BY: DD			
DATE: 1/14/2020			
REVISED: -		PAGE: 1 of 2	

EAST ABUTMENT
HP PILES END BEARING ON BEDROCK,
APPROXIMATE PILE TIP EL. 325.00'

BORING LOG BB-201

Date Begin - End: 12/13/2019 - 12/16/2019 **Drilling Company:** New England Boring Contractors
Logged By: L. Wang **Drill Crew:** Matt & Nolan
Hor.-Vert. Datum: Not Available **Drilling Equipment:** ATV **Hammer Type - Drop:** 140 lb. Auto - 30 in.
Plunge: -90 degrees **Drilling Method:** Drive/Wash
Weather: Sunny and Cloudy **Exploration Diameter:** 4 in. O.D.

FIELD EXPLORATION — Northing: 2913032.77, Easting: 443494.98; Approximate Ground Surface Elevation (ft.): 382; Surface Condition: Exposed Topsoil

Approximate Elevation (feet)	Depth (feet)	Lithologic Description	Sample Number	Sample Type	Blow Counts(6"-6"-6") Penetrat.Resist(N)*Hammer Eff. RQD(%)	Recovery (Inches)	USCS Symbol	Water Content (%)	Dry Unit Wt. (pcf)	Passing #4 (%)	Passing #200 (%)	Liquid Limit	Plasticity Index (NP=Non-Plastic)	Additional Tests/ Remarks
		S-11: SAND (SP): fine to coarse-grained, trace inorganics silt, light brown, wet, medium dense	S-11 (cont.)	BC	6 6 6 6	11" (cont.)								
		S-10: Poorly Graded SAND (SP): fine to medium-grained, trace fine-grained gravel, light gray, wet, loose - gravel up to 1.5" in tip of spoon sub-angular to sub-rounded												
		S-12: SAND (SP): fine-grained, trace coarse quartz sand, light gray, wet, loose	S-12	BC	2 3 6 8	13"								
		S-13: no recovery for the first attempt, **SAND (SP)**: medium to coarse-grained, dark gray, wet, dense, trace inorganic silt	S-13	BC	18 12 15 20	16"								
		S-14: Silty SAND with some Gravel (SM): fine to coarse-grained, some fine to coarse-grained gravel up to 1", subrounded, some inorganic silt, dark gray, wet, very dense	S-14	BC	50 67 60 53	21"	SM			70	18			
														Rig shaking at 57 feet, cuttings observed as rock fragments
		R-1: GNEISS: mostly medium to coarse-grained, inter-layered light to dark bluish gray, highly fractured, medium strong - 30" quartz dike at 61 feet	R-1		RQD=23	87%								Core run 59 ft to 60 ft = 1min 32sec Core run 60 ft to 61 ft = 1min 58sec Core run 61 ft to 62 ft = 2min 17sec Core run 62 ft to 63 ft = 3min 54sec Core run 63 ft to 64 ft = 2min 30sec Core run 64 ft to 65 ft = 1min 30sec Core run 65 ft to 66 ft = 2min 37sec
		R-2: similar to R-1 except moderately fractured	R-2		RQD=57	97%								Core run 66 ft to 67 ft = 3min 27sec Core run 67 ft to 68 ft = 2min 27sec Core run 68 ft to 69 ft = 2min 28sec
		The boring was terminated at approximately 69 ft. below ground surface. The boring was backfilled with cuttings and topsoil on December 16, 2019.												

GROUNDWATER LEVEL INFORMATION:
Groundwater was observed at approximately 3 ft. below ground surface during drilling.
GENERAL NOTES:
The exploration location and elevation are approximate and were estimated by Kleinfelder.

KLEINFELDER *Bright People. Right Solutions.*

PROJECT NO.: 20181590	BORING LOG BB-201	PLATE	
DRAWN BY: MAP	Ware Bridge Route 32 Ware, Massachusetts	BB-201	
CHECKED BY: DD			
DATE: 1/14/2020			
REVISED: -		PAGE: 2 of 2	

DATE	DESCRIPTION
9/10/2022	ISSUED FOR CONSTRUCTION

THIS SHEET IS APPROVED FOR CONSTRUCTION BY MASSDOT
AUTHORIZED SIGNATORY: STATE BRIDGE ENGINEER
USE ONLY PRINTS OF LATEST DATE

605126_BR3-11 BORING LOGS (W05015).DWG Plotted on 17-Sep-2022 10:28 PM
FINAL STRUCTURAL SUBMITTAL (SF) 19-AUGUST-2022

WARE
STATE ROUTE 32 (PALMER ROAD) OVER WARE RIVER

STATE	FED. AID PROJ. NO.	SHEET NO.	TOTAL SHEETS
MA	STP(BR-OFF)-003S(606)X	71	125
PROJECT FILE NO.	605126		

PLAN AND ELEVATION

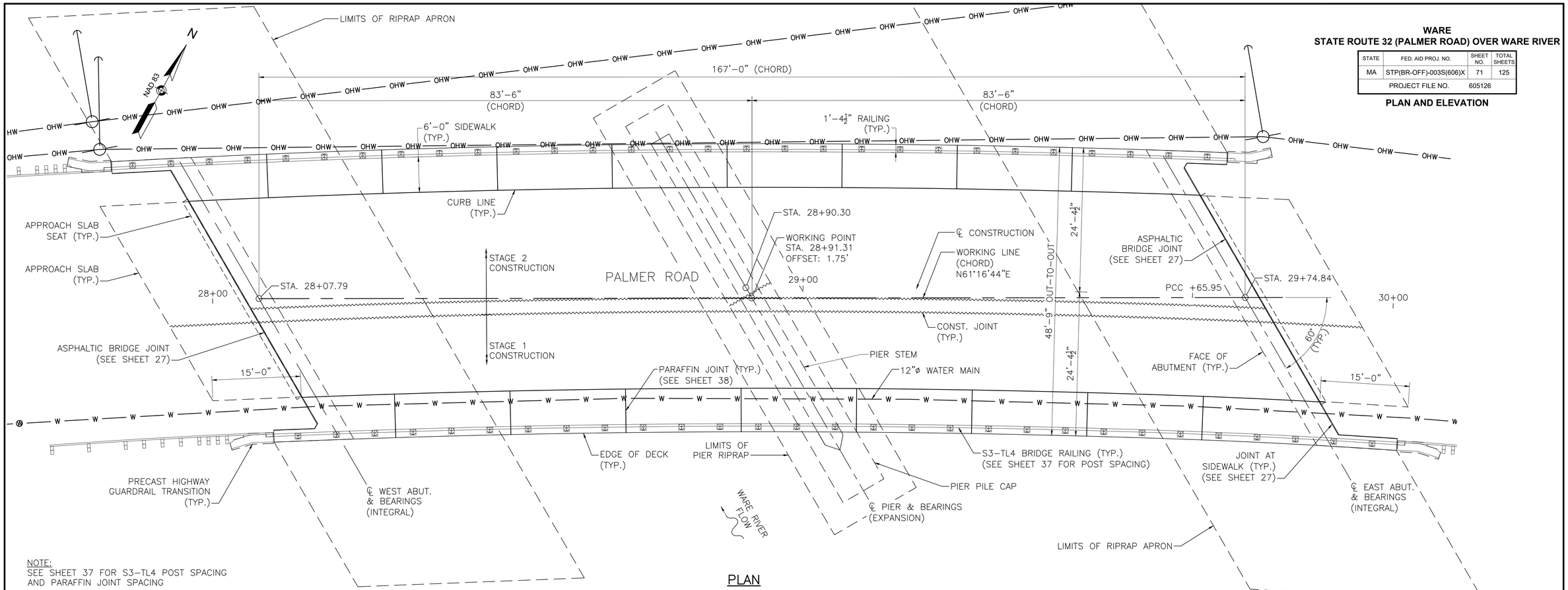

NOTE:
SEE SHEET 37 FOR S3-TL4 POST SPACING AND PARAFFIN JOINT SPACING

PLAN
SCALE: ⅛"=1'-0"

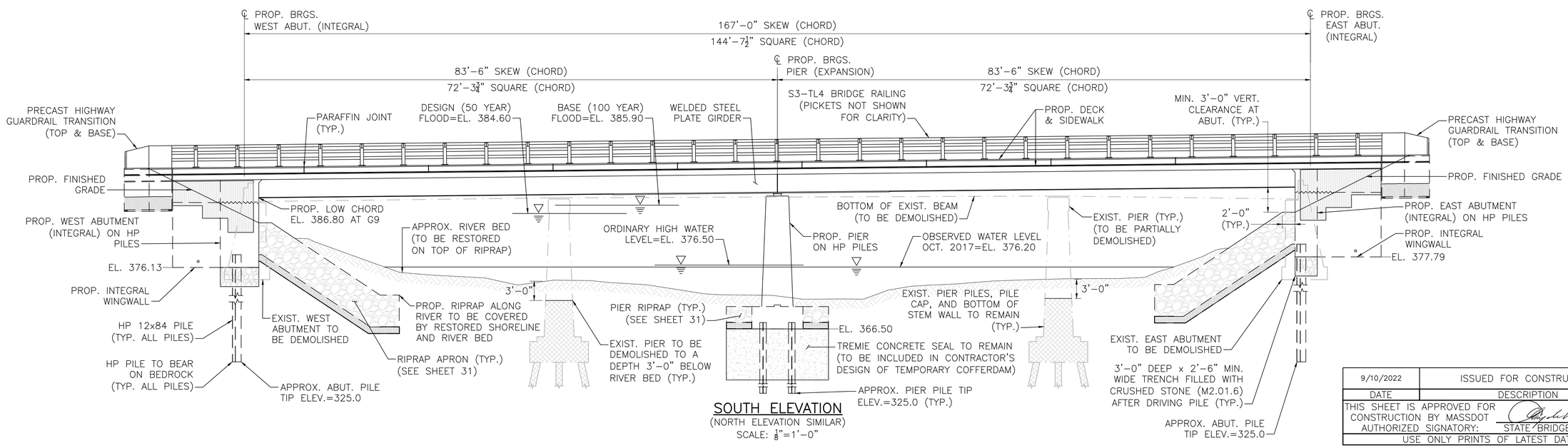

SOUTH ELEVATION
(NORTH ELEVATION SIMILAR)
SCALE: ⅛"=1'-0"

DATE	DESCRIPTION
9/10/2022	ISSUED FOR CONSTRUCTION

THIS SHEET IS APPROVED FOR CONSTRUCTION BY MASSDOT AUTHORIZED SIGNATORY: STATE BRIDGE ENGINEER

USE ONLY PRINTS OF LATEST DATE

605126_BR12 PLAN AND ELEVATION (W050015).DWG Plotted on 14-Oct-2022 3:33 PM
FINAL STRUCTURAL SUBMITTAL (SF) 19-AUGUST-2022

WARE
STATE ROUTE 32 (PALMER ROAD) OVER WARE RIVER

STATE	FED. AID PROJ. NO.	SHEET NO.	TOTAL SHEETS
MA	STP(BR-OFF)-003S(606)X	72	125
PROJECT FILE NO. 605126			

STAGE CONSTRUCTION
SHEET 1 OF 9 - SECTIONS

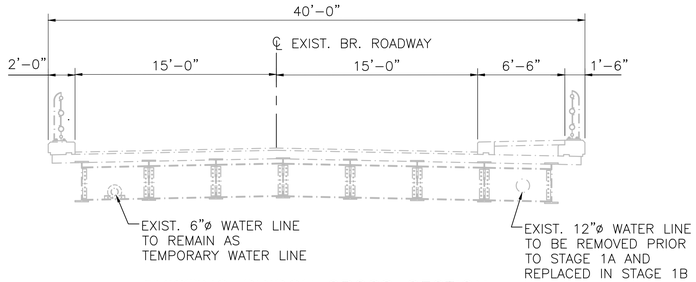

EXISTING BRIDGE CROSS SECTION
SCALE: $\frac{3}{16}$" = 1'–0"

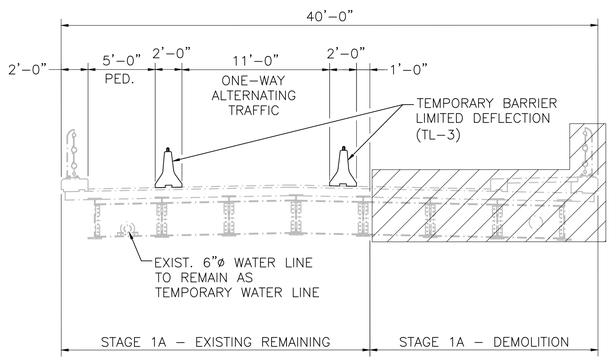

STAGE 1A – BRIDGE CROSS SECTION
SCALE: $\frac{3}{16}$" = 1'–0"

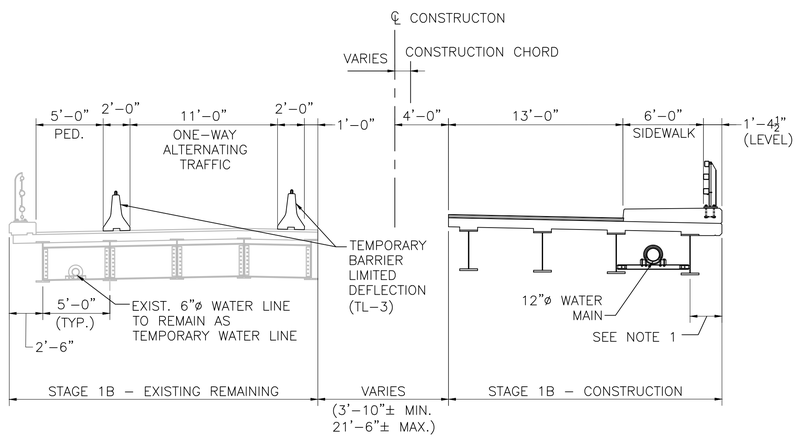

STAGE 1B – BRIDGE CROSS SECTION
SCALE: $\frac{3}{16}$" = 1'–0"

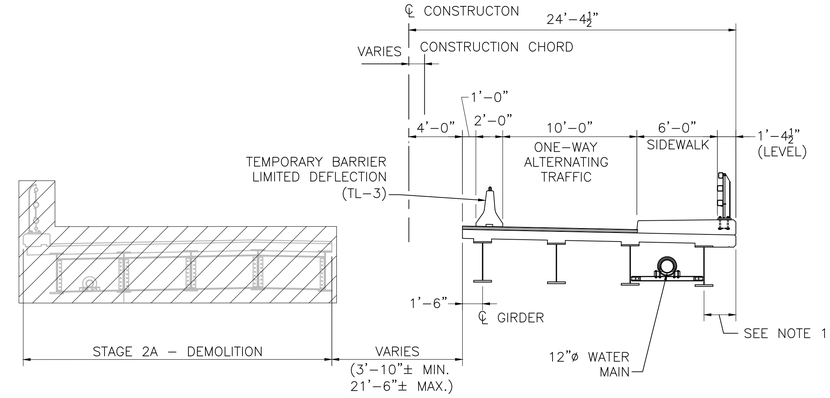

STAGE 2A – BRIDGE CROSS SECTION
SCALE: $\frac{3}{16}$" = 1'–0"

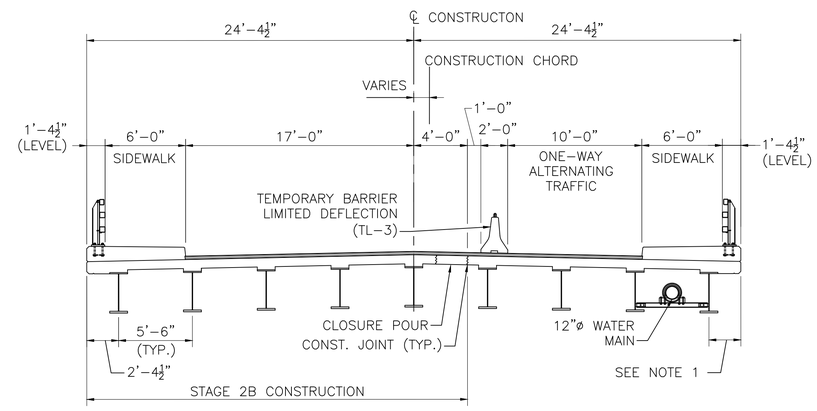

STAGE 2B – BRIDGE CROSS SECTION
SCALE: $\frac{3}{16}$" = 1'–0"

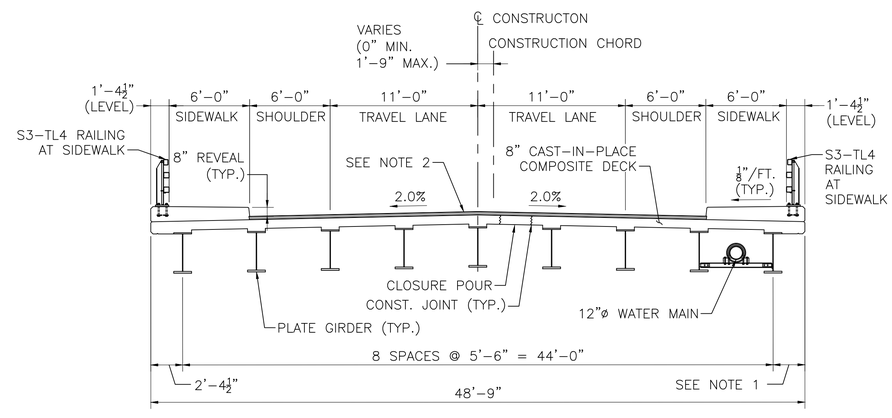

FINAL BRIDGE CROSS SECTION
SCALE: $\frac{3}{16}$" = 1'–0"

NOTE:

1. THE WIDTH OF THE OVERHANG IS 2'–4½" FROM THE WEST ABUTMENT TO THE PCC, WHERE THE RADIUS OF THE ROADWAY CURVATURE CHANGES FROM 2000' TO 1000'. ALL GIRDERS HAVE A CONSTANT RADIUS, SO THE OVERHANG VARIES FROM A MINIMUM OF 2'–4½" AT THE PCC TO MAXIMUM OF 2'–5¾" AT THE FACE OF THE EAST ABUTMENT.
2. 1½" SUPERPAVE BRIDGE SURFACE COURSE – 12.5 (SSC–B–12.5) OVER 1½" SUPERPAVE BRIDGE PROTECTIVE COURSE – 12.5 (SPC–B–12.5) OVER SPRAY APPLIED MEMBRANE WATERPROOFING

DATE	DESCRIPTION
9/10/2022	ISSUED FOR CONSTRUCTION

THIS SHEET IS APPROVED FOR CONSTRUCTION BY MASSDOT
AUTHORIZED SIGNATORY: STATE BRIDGE ENGINEER
USE ONLY PRINTS OF LATEST DATE

605126_BR13 STAGE CONSTRUCTION (W05015).DWG Plotted on 17-Sep-2022 10:31 PM
FINAL STRUCTURAL SUBMITTAL (SF) 19-AUGUST-2022

WARE
STATE ROUTE 32 (PALMER ROAD) OVER WARE RIVER

STATE	FED. AID PROJ. NO.	SHEET NO.	TOTAL SHEETS
MA	STP(BR-OFF)-003S(606)X	73	125
PROJECT FILE NO.	605126		

STAGE CONSTRUCTION
STAGE 1A PLAN SUPERSTRUCTURE

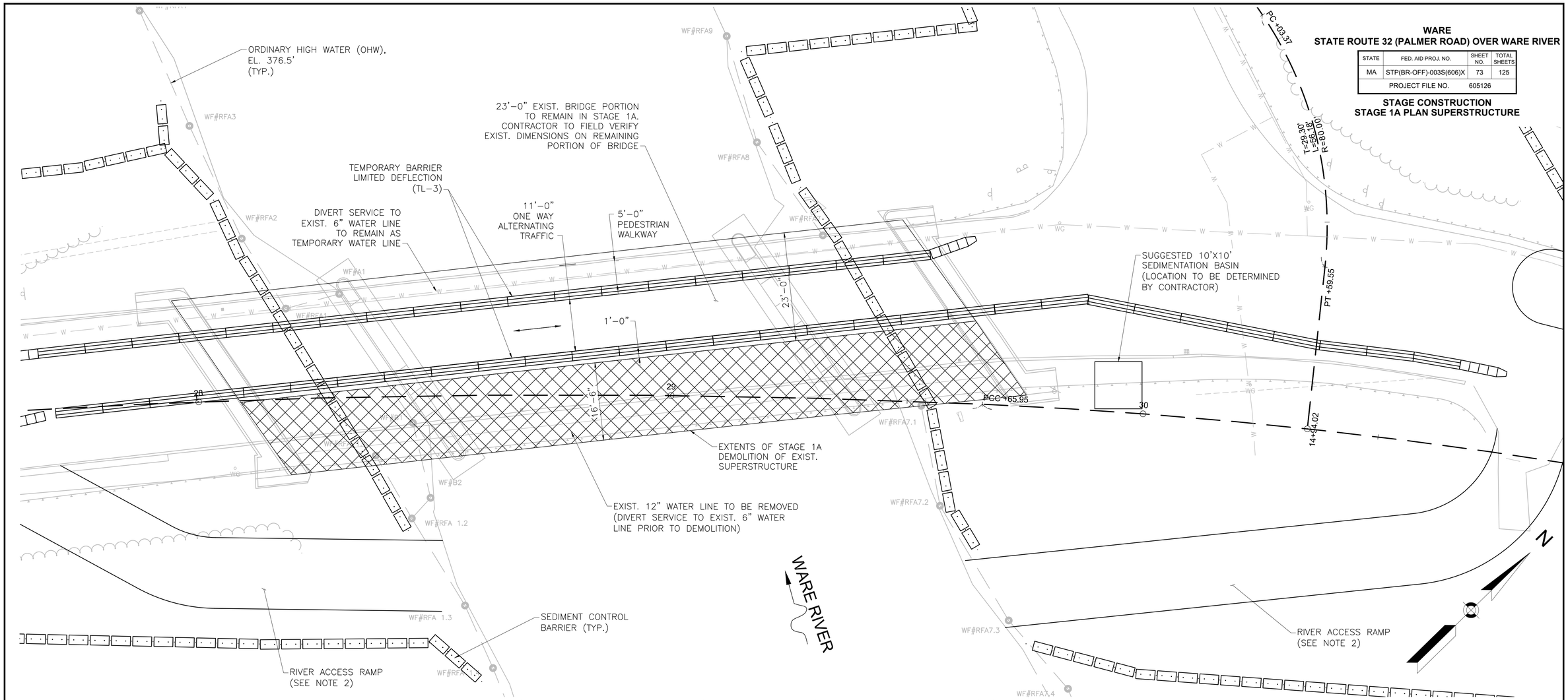

SEQUENCE OF CONSTRUCTION STAGE 1A

1. INSTALL ADVANCED WARNING TRAFFIC MANAGEMENT SIGNAGE.
2. INSTALL SOIL EROSION AND SEDIMENTATION CONTROLS.
3. CLEAR VEGETATION AND REMOVE TREES AS REQUIRED.
4. GRADE FOR CONSTRUCTION AND INSTALLATION OF THE ACCESS RAMPS TO THE RIVER AND INSTALL SEDIMENTATION BASINS. ALL WORK TO CONSTRUCT THE ACCESS RAMPS SHALL BE WITHIN THE LIMITS OF PREVIOUSLY INSTALLED SOIL EROSION AND SEDIMENTATION CONTROLS IN ORDER TO LIMIT IMPACTS ON THE RIVER TO THE GREATEST EXTENT POSSIBLE.
5. INSTALL PROPOSED UTILITY POLES OR PROTECT EXISTING UTILITY POLES IN PLACE FOR RELOCATION OF OVERHEAD UTILITIES AND REMOVE EXISTING POLES, AS NECESSARY, PRIOR TO BRIDGE AND ROADWAY WORK. SEE UTILITY PLANS.
6. CONNECT THE EXISTING 6" TEMPORARY WATER LINE CROSSING THE NORTH SIDE OF THE EXISTING BRIDGE TO THE EXISTING 12" WATER MAIN ON THE SOUTH SIDE OF THE BRIDGE AND PERFORM ALL REQUIRED TESTING TO ACTIVATE THE TEMPORARY WATER LINE. DIVERT FLOW FROM THE EXISTING 12" WATER MAIN TO THE EXISTING 6" TEMPORARY WATER LINE AND SHUT DOWN THE EXISTING 12" WATER MAIN.
7. INSTALL PHASE 1 TEMPORARY TRAFFIC CONTROL AND DIVERT ALL TRAFFIC TO A SINGLE 11'–0" ONE–WAY ALTERNATING LANE ON THE NORTH SIDE OF THE BRIDGE. MAINTAIN A 5'–0" PEDESTRIAN WALKWAY BETWEEN THE EXISTING NORTH SAFETY CURB AND THE ANCHORED BARRIER.
8. POSITION PHASE 1A RELATED WORK PLATFORMS IN THE WARE RIVER BELOW THE BRIDGE AND INSTALL TEMPORARY PROTECTIVE SHIELDING TO PREVENT ANY DEMOLITION AND WORK DEBRIS FROM FALLING INTO THE RIVER.
9. DEMOLISH THE PHASE 1A SOUTH PORTION OF THE EXISTING BRIDGE DECK AND SUPERSTRUCTURE. CARE SHALL BE TAKEN TO PREVENT ANY DEBRIS FROM FALLING INTO THE RIVER. ANY DEMOLITION DEBRIS THAT FALLS INTO THE RIVER SHALL BE IMMEDIATELY REMOVED.

STAGE 1A – SUGGESTED SUPERSTRUCTURE DEMOLITION PLAN

SCALE: 1" = 10'

NOTES:

1. THESE PLANS PRESENT A SUGGESTED FEASIBLE OPTION FOR PHASING THE CONSTRUCTION OF THE WORK AND MANAGING AND MAINTAINING VEHICULAR AND PEDESTRIAN TRAFFIC DURING CONSTRUCTION. THEY ARE NOT INTENDED TO COVER ALL POSSIBLE CONSTRUCTION OPERATIONS AND SITUATIONS. THE CONTRACTOR IS RESPONSIBLE TO DEVELOP, DESIGN, AND SUBMIT FOR THE ENGINEER'S PRIOR REVIEW AND APPROVAL ALL ELEMENTS OF CONSTRUCTION PHASING AND TEMPORARY TRAFFIC AND PEDESTRIAN CONTROL. THE CONTRACTOR'S DESIGN AND PROPOSED MEANS OF CONSTRUCTION AND PHASING SHALL CONFORM TO ALL REQUIREMENTS OF THE CONTRACT AND ALL ENVIRONMENTAL AND OTHER PERMITS, IN ACCORDANCE WITH ALL MASSDOT AND MUTCD STANDARDS AND REGULATIONS.
2. RIVER ACCESS RAMPS SHALL BE DESIGNED BY THE CONTRACTOR TO STABILIZE THE SLOPE AND SURFACE FOR CONSTRUCTION EQUIPMENT AND ACTIVITIES, AND TO PREVENT OFFSITE TRACKING OF SEDIMENTS AND DEBRIS. THE CONTRACTOR SHALL REMOVE ALL ACCESS RAMPS, REGRADE, AND RESTORE THE AREAS TO THE FINAL CONDITION AFTER COMPLETION OF CONSTRUCTION ACTIVITIES.

DATE	DESCRIPTION
9/10/2022	ISSUED FOR CONSTRUCTION

THIS SHEET IS APPROVED FOR CONSTRUCTION BY MASSDOT
AUTHORIZED SIGNATORY: STATE BRIDGE ENGINEER
USE ONLY PRINTS OF LATEST DATE

605126_BR14 STAGE CONSTRUCTION PLAN 1 - STAGE 1A SUPERSTRUCTURE.DWG Plotted on 30-Jun-2022 8:33 AM
FINAL STRUCTURAL SUBMITTAL (SF) 19-AUGUST-2022

WARE
STATE ROUTE 32 (PALMER ROAD) OVER WARE RIVER

STATE	FED. AID PROJ. NO.	SHEET NO.	TOTAL SHEETS
MA	STP(BR-OFF)-003S(606)X	74	125
PROJECT FILE NO.	605126		

STAGE CONSTRUCTION
STAGE 1A PLAN SUBSTRUCTURE

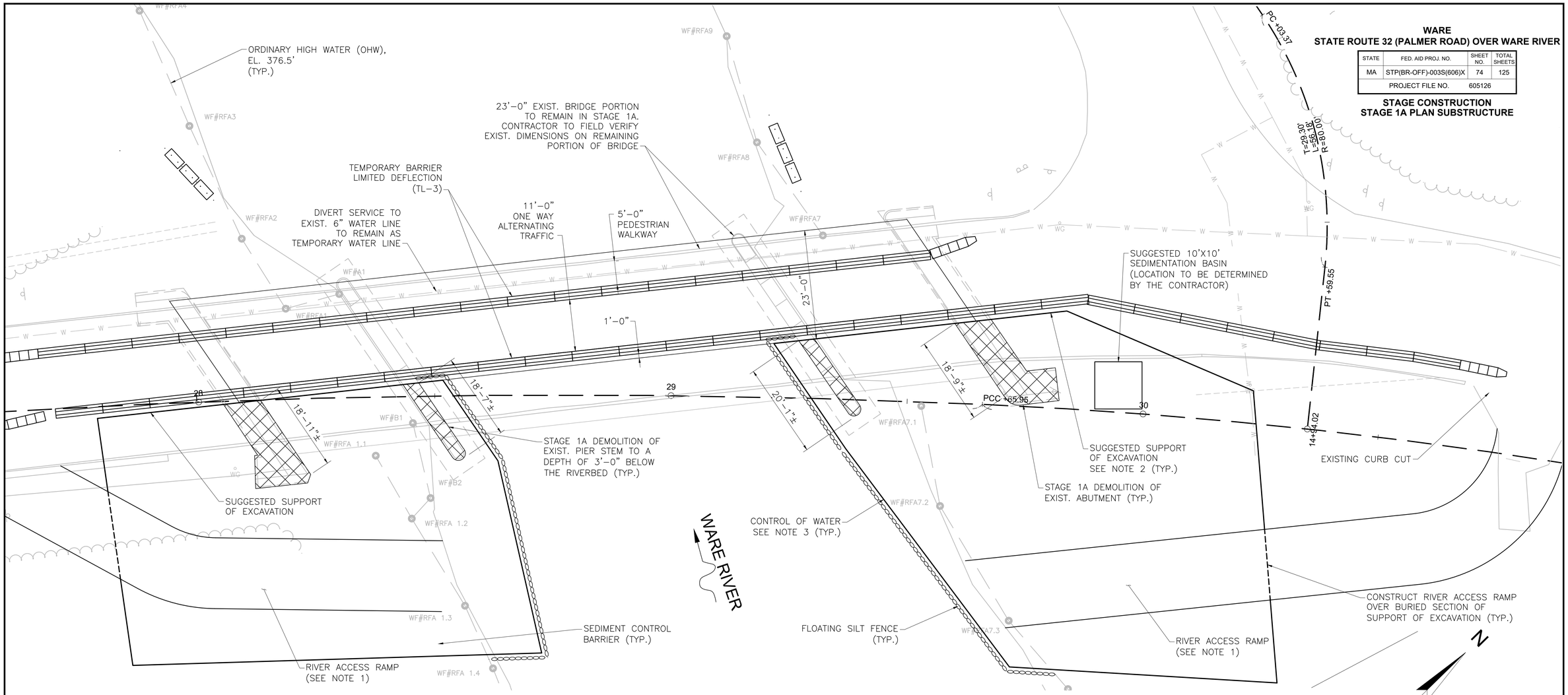

STAGE 1A – SUGGESTED SUBSTRUCTURE DEMOLITION PLAN

SCALE: 1" = 10'

SEQUENCE OF CONSTRUCTION STAGE 1A (CONTINUED)

1. INSTALL FLOATING SILT FENCES AROUND THE LIMITS OF THE PROPOSED CONTROL OF WATER FOR INSTALLATION OF THE ABUTMENT RIPRAP AND THEN INSTALL THE CONTROL OF WATER IN THE RIVER AND THE SUPPORT OF EXCAVATION ALONG THE SOUTH EDGE OF THE EXISTING ROADWAY TO REMAIN. THE SUPPORT OF EXCAVATION IS SUGGESTED TO BE CONTINUOUS WITH THE PROPOSED CONTROL OF WATER FOR INSTALLATION OF THE ABUTMENT RIPRAP.

2. DEMOLISH THE SOUTHERN PORTIONS OF THE EXISTING PIER STEMS TO A DEPTH OF 3'-0" BELOW THE RIVERBED. ALL DEMOLITION WORK SHALL BE PERFORMED EITHER FROM LAND INSIDE THE CONTROL OF WATER OR FROM THE WORK PLATFORMS IN THE RIVER. IF DEWATERING IS REQUIRED, WATER SHALL BE PUMPED TO THE SEDIMENTATION BASIN AND NOT DISCHARGED DIRECTLY INTO THE RIVER. ANY RIVERBED MATERIAL REMOVED FOR DEMOLITION SHALL BE REPLACED WITH NATURAL RIVERBED MATERIALS TO RESTORE EXISTING CONDITIONS, IN ACCORDANCE WITH THE PROJECT SPECIFICATIONS. CARE SHALL BE TAKEN FOR ALL WORK PERFORMED IN THE RIVER IN ORDER TO MINIMIZE IMPACTS TO THE WATERWAY.

3. BRACE THE NORTHERN SECTIONS OF THE ABUTMENTS TO REMAIN, AS REQUIRED, TO MAINTAIN STABILITY. EXCAVATE BEHIND THE EXISTING ABUTMENTS AND VERTICALLY SAWCUT THE ABUTMENTS AT THE PHASE 1A LIMITS OF DEMOLITION SHOWN. CAREFULLY DEMOLISH THE SOUTHERN SECTIONS OF THE ABUTMENTS AND FILL THE VOIDS WITH GRAVEL BORROW, AS REQUIRED, COMPACTED IN ACCORDANCE WITH THE STANDARD SPECIFICATIONS.

NOTES:

1. RIVER ACCESS RAMPS SHALL BE DESIGNED BY THE CONTRACTOR TO STABILIZE THE SLOPE AND SURFACE FOR CONSTRUCTION EQUIPMENT AND ACTIVITIES, AND TO PREVENT OFFSITE TRACKING OF SEDIMENTS AND DEBRIS. THE CONTRACTOR SHALL REMOVE ALL ACCESS RAMPS, REGRADE, AND RESTORE THE AREAS TO THE FINAL CONDITION AFTER COMPLETION OF CONSTRUCTION ACTIVITIES.

2. SEE SPECIAL PROVISIONS FOR ITEM 991.11 TEMPORARY CONTROL OF WATER – STRUCTURE NO. W-05-015 AND ITEM 950.11 TEMPORARY SUPPORT OF EXCAVATION, WHICH SHALL BE DESIGNED BY THE CONTRACTOR. THESE DESIGNS BY THE CONTRACTOR SHALL BE RESPONSIBLE FOR DELINEATING THE EXTENT AND LIMITS BETWEEN ITEMS 950.11 AND 991.11. THE SUGGESTED LIMITS, SYMBOLS, AND LABELS SHOWN ON THESE PLANS FOR ITEMS 950.11 AND 991.11 ARE PROVIDED FOR SUGGESTED ESTIMATE PURPOSES ONLY.

9/10/2022	ISSUED FOR CONSTRUCTION
DATE	DESCRIPTION
THIS SHEET IS APPROVED FOR CONSTRUCTION BY MASSDOT AUTHORIZED SIGNATORY:	STATE BRIDGE ENGINEER
USE ONLY PRINTS OF LATEST DATE	

605126_BR15 STAGE CONSTRUCTION PLAN 2 - STAGE 1A SUBSTRUCTURE.DWG Plotted on 30-Jun-2022 8:33 AM
FINAL STRUCTURAL SUBMITTAL (SF) 19-AUGUST-2022

WARE
STATE ROUTE 32 (PALMER ROAD) OVER WARE RIVER

STATE	FED. AID PROJ. NO.	SHEET NO.	TOTAL SHEETS
MA	STP(BR-OFF)-003S(606)X	75	125
PROJECT FILE NO.	605126		

STAGE CONSTRUCTION
STAGE 1B PLAN SUBSTRUCTURE

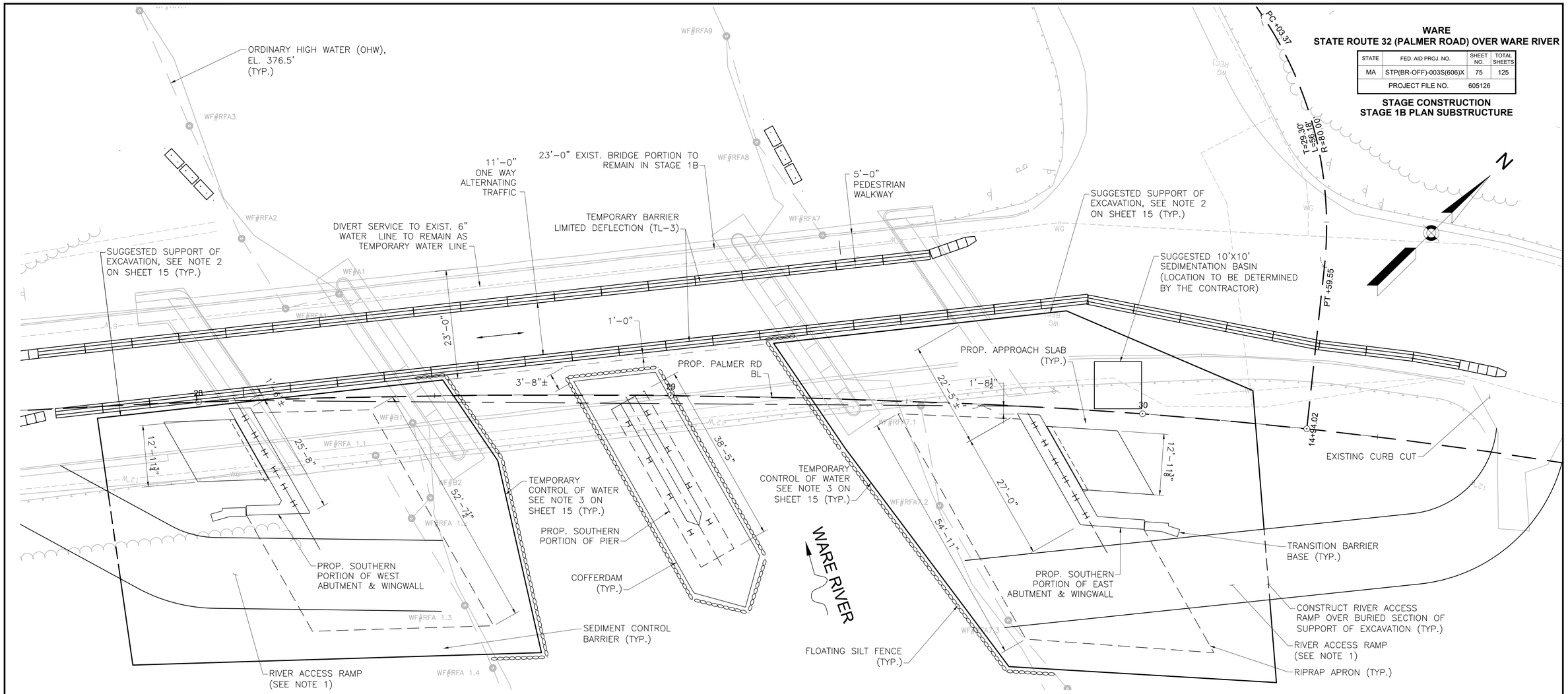

STAGE 1B – SUGGESTED SUBSTRUCTURE CONSTRUCTION PLAN

SCALE: 1" = 10'

SUGGESTED SEQUENCE OF CONSTRUCTION STAGE 1B

1. DRIVE PILES FOR THE ABUTMENTS, EXCAVATE THE 3'–0" DEEP BY 2'–6" MINIMUM WIDTH TRENCHES AT THE TOP OF THE PILES, AND FILL WITH CRUSHED STONE. CONSTRUCT THE CONCRETE INTEGRAL ABUTMENT PILE CAPS UP TO THE CONSTRUCTION JOINT AND THE GIRDER PEDESTALS WITH EMBEDDED ANCHORS.

2. EXCAVATE THE SLOPES IN FRONT OF THE SOUTHERN PORTIONS OF THE ABUTMENTS AND INSTALL THE GEOTEXTILE FABRIC, CRUSHED STONE, AND RIPRAP. BACKFILL THE ABUTMENTS AS THE RIPRAP IS INSTALLED TO MAINTAIN EQUAL LEVELS OF FILL ON BOTH SIDES OF THE ABUTMENTS. BACKFILLING OF THE ABUTMENTS SHALL ONLY EXTEND TO THE TOP OF THE RIPRAP (THE REMAINING DEPTH OF BACKFILL WILL BE INSTALLED AFTER THE DECK IS CONSTRUCTED). EXISTING RIVERBED MATERIAL SHALL BE RETAINED SO THAT IT CAN BE REPLACED AFTER CONSTRUCTION OF THE RIPRAP IS COMPLETE.

3. RESTORE THE RIVERBED AND SLOPE ALONG THE RIVERBANKS ON TOP OF THE RIPRAP, IN ACCORDANCE WITH THE PLANS. ONLY THE RIPRAP ALONG THE RIVER IS TO BE BURIED. THE UPSTREAM SECTIONS OF THE RIPRAP APRON THAT WRAP AROUND THE ABUTMENTS AND WINGWALLS IS TO REMAIN EXPOSED.

4. REMOVE THE CONTROL OF WATER AND REPAIR THE RIVERBED MATERIAL, AS REQUIRED, BEFORE REMOVING THE FLOATING SILT FENCES. MAINTAIN THE SUPPORT OF EXCAVATION ALONG THE SOUTHERN EDGE OF THE EXISTING ROADWAY AT THE APPROACHES TO THE REMAINING PORTION OF THE EXISTING BRIDGE.

5. INSTALL A FLOATING SILT FENCE AROUND THE LIMITS OF THE PROPOSED PIER COFFERDAM. INSTALL THE COFFERDAM FOR CONSTRUCTION OF THE SOUTHERN PORTION OF THE PROPOSED PIER AND DRIVE THE PILES FOR THE PIER INSIDE THE COFFERDAM TO MINIMIZE IMPACTS TO THE WATERWAY. EXCAVATE INSIDE THE COFFERDAM AND INSTALL THE TREMIE SEAL. EXISTING RIVERBED MATERIAL SHALL BE RETAINED SO THAT IT CAN BE REPLACED AFTER CONSTRUCTION OF THE PIER IS COMPLETE. DEWATERING OF THE COFFERDAM SHALL BE PUMPED TO THE SEDIMENTATION BASIN AND NOT DISCHARGED DIRECTLY INTO THE RIVER. ALL WORK TO INSTALL THE FLOATING SILT FENCE, COFFERDAM, AND TREMIE SEAL AND TO DRIVE THE PILES SHALL BE PERFORMED FROM LAND BEHIND THE EROSION AND SEDIMENTATION CONTROLS OR FROM THE WORK PLATFORMS IN THE RIVER. INSTALLATION OF THE COFFERDAMS FOR THE PROPOSED PIER CONSTRUCTION SHALL NOT COMMENCE UNTIL AFTER THE CONTROL OF WATER FOR THE ABUTMENT RIPRAP HAS BEEN REMOVED.

6. CONSTRUCT THE CONCRETE PIER PILE CAP AND STEM WALL.

7. INSTALL THE PIER RIPRAP BETWEEN THE PILE CAP AND COFFERDAM AND RESTORE THE RIVERBED TO THE PRECONSTRUCTION CONDITIONS ON TOP OF THE RIPRAP AND THE PILE CAP. CUT AND REMOVE THE COFFERDAM AND REPAIR THE RIVERBED MATERIAL, AS REQUIRED, BEFORE REMOVING THE FLOATING SILT FENCE.

NOTE:

1. RIVER ACCESS RAMPS SHALL BE DESIGNED BY THE CONTRACTOR TO STABILIZE THE SLOPE AND SURFACE FOR CONSTRUCTION EQUIPMENT AND ACTIVITIES, AND TO PREVENT OFFSITE TRACKING OF SEDIMENTS AND DEBRIS. THE CONTRACTOR SHALL REMOVE ALL ACCESS RAMPS, REGRADE, AND RESTORE THE AREAS TO THE FINAL CONDITION AFTER COMPLETION OF CONSTRUCTION ACTIVITIES.

9/10/2022	ISSUED FOR CONSTRUCTION
DATE	DESCRIPTION
THIS SHEET IS APPROVED FOR CONSTRUCTION BY MASSDOT AUTHORIZED SIGNATORY:	STATE BRIDGE ENGINEER
USE ONLY PRINTS OF LATEST DATE	

605126_BR16 STAGE CONSTRUCTION PLAN 3 - STAGE 1B SUBSTRUCTURE.DWG Plotted on 30-Jun-2022 8:33 AM
FINAL STRUCTURAL SUBMITTAL (SF) 19-AUGUST-2022

WARE
STATE ROUTE 32 (PALMER ROAD) OVER WARE RIVER

STATE	FED. AID PROJ. NO.	SHEET NO.	TOTAL SHEETS
MA	STP(BR-OFF)-003S(606)X	76	125
PROJECT FILE NO.	605126		

STAGE CONSTRUCTION
STAGE 1B PLAN SUPERSTRUCTURE

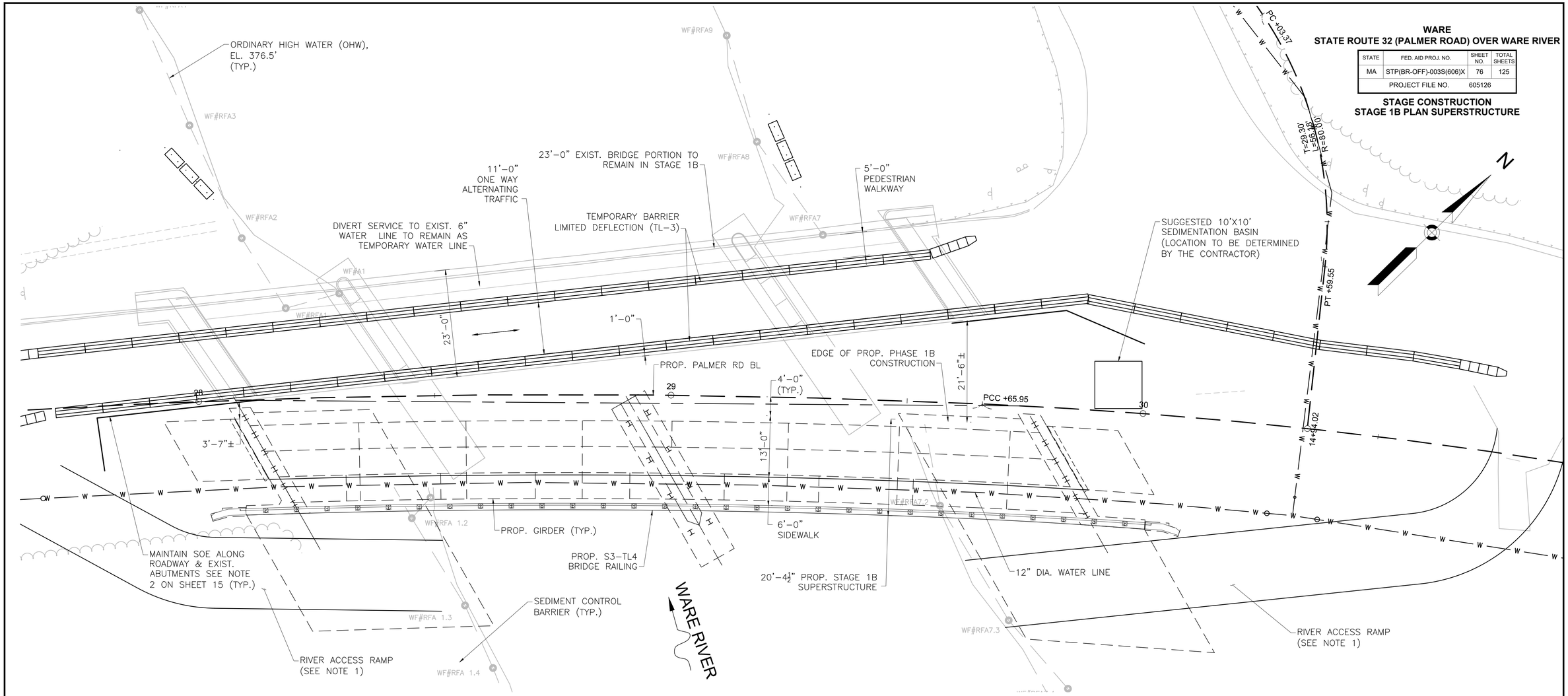

STAGE 1B – SUGGESTED SUPERSTRUCTURE CONSTRUCTION PLAN

SCALE: 1" = 10'

SUGGESTED SEQUENCE OF CONSTRUCTION STAGE 1B (CONTINUED)

1. INSTALL THE ERECTION PADS ON THE GIRDER PEDESTALS AND ERECT STEEL GIRDERS G1 THROUGH G4. CONNECT ALL END AND INTERIOR DIAPHRAGMS AND UTILITY SUPPORTS.
2. CONSTRUCT THE REMAINING SECTIONS OF THE CONCRETE INTEGRAL ABUTMENTS AND APPROACH SLAB SHELVES.
3. INSTALL THE 12" WATER LINE IN THE UTILITY BAY BETWEEN GIRDERS G1 AND G2.
4. ATTACH THE SHEAR STUDS TO THE TOPS OF THE GIRDERS IN ACCORDANCE WITH THE DIMENSIONS PROVIDED ON THE STEEL DETAILS SHOWN ON SHEET 33 OF 42.
5. CONSTRUCT THE CAST-IN-PLACE COMPOSITE DECK SLAB IN ACCORDANCE WITH THE DECK PLACEMENT SEQUENCE SHOWN ON SHEET 39 OF 42.
6. FINISH BACKFILLING BEHIND THE INTEGRAL ABUTMENTS AND CONSTRUCT THE SOUTHERN PORTIONS OF THE APPROACH SLABS.
7. CONSTRUCT THE SOUTH SIDEWALK AND THEN INSTALL THE S3-TL4 BRIDGE RAILING AFTER THE SIDEWALK HAS CURED.
8. INSTALL THE MEMBRANE WATERPROOFING AND BRIDGE SUPERPAVE PROTECTIVE COURSE.

NOTES:

1. RIVER ACCESS RAMPS SHALL BE DESIGNED BY THE CONTRACTOR TO STABILIZE THE SLOPE AND SURFACE FOR CONSTRUCTION EQUIPMENT AND ACTIVITIES, AND TO PREVENT OFFSITE TRACKING OF SEDIMENTS AND DEBRIS. THE CONTRACTOR SHALL REMOVE ALL ACCESS RAMPS, REGRADE, AND RESTORE THE AREAS TO THE FINAL CONDITION AFTER COMPLETION OF CONSTRUCTION ACTIVITIES.

9/10/2022	ISSUED FOR CONSTRUCTION
DATE	DESCRIPTION
THIS SHEET IS APPROVED FOR CONSTRUCTION BY MASSDOT AUTHORIZED SIGNATORY:	STATE BRIDGE ENGINEER
USE ONLY PRINTS OF LATEST DATE	

605126_BR17 STAGE CONSTRUCTION PLAN 4 - STAGE 1B SUPERSTRUCTURE.DWG Plotted on 30-Jun-2022 8:33 AM
FINAL STRUCTURAL SUBMITTAL (SF) 19-AUGUST-2022

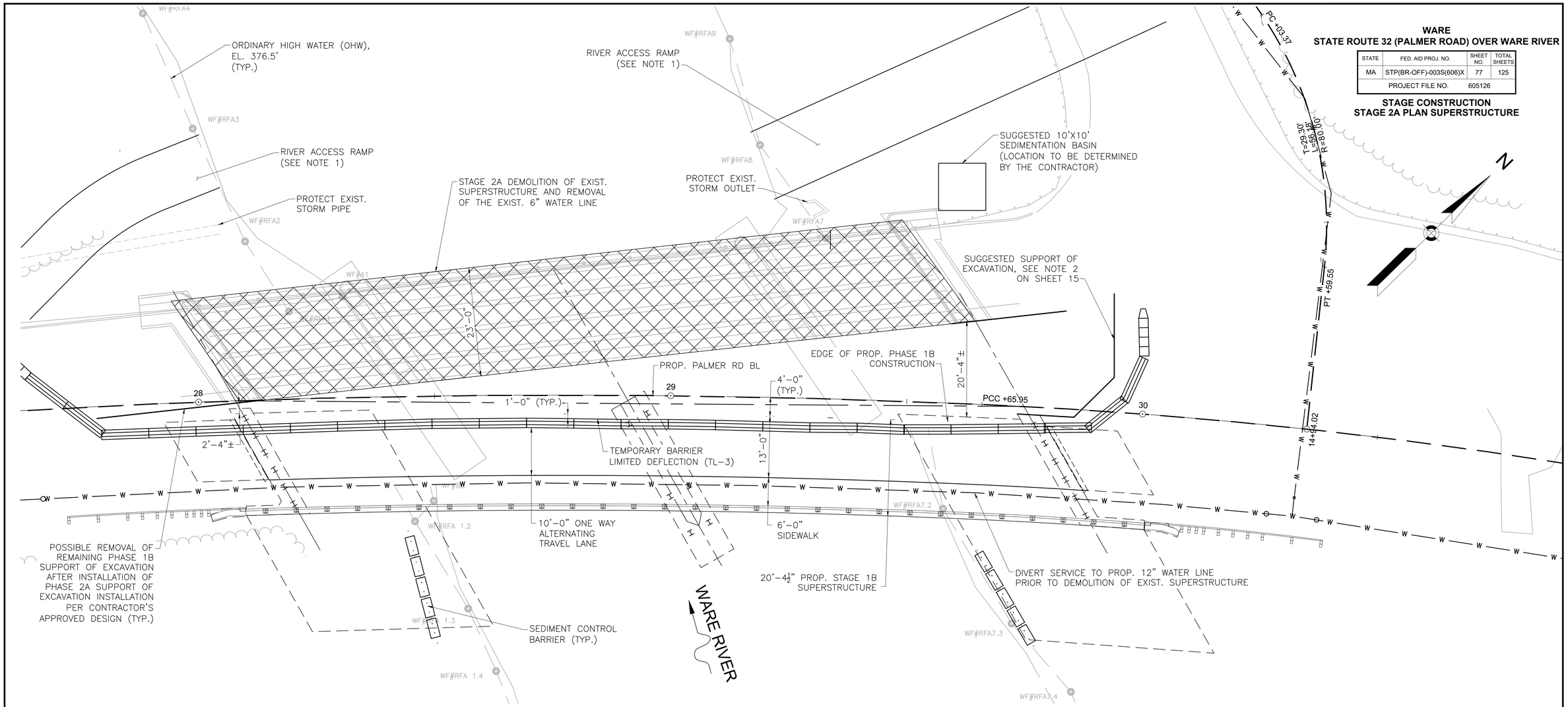

WARE
STATE ROUTE 32 (PALMER ROAD) OVER WARE RIVER

STATE	FED. AID PROJ. NO.	SHEET NO.	TOTAL SHEETS
MA	STP(BR-OFF)-003S(606)X	77	125
PROJECT FILE NO.	605126		

STAGE CONSTRUCTION
STAGE 2A PLAN SUPERSTRUCTURE

STAGE 2A – SUGGESTED SUPERSTRUCTURE DEMOLITION PLAN

SCALE: 1" = 10'

SUGGESTED SEQUENCE OF CONSTRUCTION STAGE 2A

1. UPON COMPLETION OF THE SOUTHERN PORTION OF THE BRIDGE AND THE REGRADING AND REALIGNMENT OF THE APPROACH ROADWAYS, AS FEASIBLE WITH PHASE 1 TRAFFIC CONTROL IN PLACE, INSTALL PHASE 1A TEMPORARY TRAFFIC CONTROL TO SHUT DOWN ST32 (PALMER ROAD) AND OLD BELCHERTOWN ROAD. WITH ST32 SHUT DOWN, INSTALL DRAINAGE AND WATER LINES ACROSS THE SOUTHERN PORTION OF ST32 AT THE INTERSECTION WITH OLD BELCHERTOWN ROAD. REGRADE THE APPROACHES IN PREPARATION TO MOVE TRAFFIC ONTO THE NEWLY CONSTRUCTED SECTION OF ST32. SEE TRAFFIC PLANS FOR THE SHUTDOWN OF ST32 AND NOTE THAT THE DURATION OF SAID SHUTDOWN IS SUGGESTED TO NOT EXCEED A MAXIMUM OF 1 WEEK. SEE NOTE 11 ON TRAFFIC SHEET 32 OF 125.
2. AFTER COMPLETING THE REGRADING OF THE ROADWAY TRANSITIONS AND THE INSTALLATION OF DRAINAGE AND WATER LINES AT OLD BELCHERTOWN ROAD, REOPEN THE NEWLY CONSTRUCTED SOUTHERN PORTION OF ST32 (PALMER ROAD) BY ENACTING PHASE 1B TEMPORARY TRAFFIC CONTROLS. OLD BELCHERTOWN ROAD IS SUGGESTED TO REMAIN CLOSED WHILE THE REGRADING AND REALIGNMENT WORK AND THE DRAINAGE AND UTILITY INSTALLATION IS COMPLETED AT THE INTERSECTION. THE DURATION OF THE OLD BELCHERTOWN ROAD SHUTDOWN IS TO BE MINIMIZED TO THE GREATEST EXTENT POSSIBLE.
3. WHEN THE REGRADING AND REALIGNMENT OF THE INTERSECTION BETWEEN OLD BELCHERTOWN ROAD AND ST32 (PALMER ROAD) IS COMPLETED, INCLUDING ALL DRAINAGE AND UTILITY INSTALLATION, RESET THE TRAFFIC BARRIERS TO THE PHASE 2 TEMPORARY TRAFFIC CONTROL CONFIGURATION TO REOPEN OLD BELCHERTOWN ROAD.
4. GRADE FOR CONSTRUCTION AND INSTALLATION OF THE ACCESS RAMPS TO THE RIVER ON THE NORTH SIDE OF ST32 (PALMER ROAD) AND INSTALL THE SEDIMENTATION BASIN. ALL WORK TO CONSTRUCT THE ACCESS RAMPS SHALL BE WITHIN THE LIMITS OF PREVIOUSLY INSTALLED SOIL EROSION AND SEDIMENTATION CONTROLS IN ORDER TO LIMIT IMPACTS ON THE RIVER TO THE GREATEST EXTENT POSSIBLE.
5. CONNECT, DISINFECT, TEST, AND ACTIVATE THE 12" WATER LINE ON THE SOUTHERN PORTION OF THE BRIDGE AND SHUT OFF THE 6" TEMPORARY WATER LINE ON THE NORTH SIDE OF THE BRIDGE.
6. REPOSITION THE WORK PLATFORMS TO THE NORTHERN PORTION OF THE EXISTING BRIDGE.
7. DEMOLISH THE PHASE 2A NORTH PORTION OF THE EXISTING BRIDGE DECK AND SUPERSTRUCTURE. CARE SHALL BE TAKEN TO PREVENT ANY DEBRIS FROM FALLING INTO THE RIVER. ANY DEMOLITION DEBRIS THAT FALLS INTO THE RIVER SHALL BE IMMEDIATELY REMOVED.

NOTE:

1. RIVER ACCESS RAMPS SHALL BE DESIGNED BY THE CONTRACTOR TO STABILIZE THE SLOPE AND SURFACE FOR CONSTRUCTION EQUIPMENT AND ACTIVITIES, AND TO PREVENT OFFSITE TRACKING OF SEDIMENTS AND DEBRIS. THE CONTRACTOR SHALL REMOVE ALL ACCESS RAMPS, REGRADE, AND RESTORE THE AREAS TO THE FINAL CONDITION AFTER COMPLETION OF CONSTRUCTION ACTIVITIES.

9/10/2022	ISSUED FOR CONSTRUCTION
DATE	DESCRIPTION

THIS SHEET IS APPROVED FOR CONSTRUCTION BY MASSDOT
AUTHORIZED SIGNATORY: STATE BRIDGE ENGINEER
USE ONLY PRINTS OF LATEST DATE

605126_BR18 STAGE CONSTRUCTION PLAN 5 - STAGE 2A SUPERSTRUCTURE.DWG Plotted on 30-Jun-2022 8:33 AM
FINAL STRUCTURAL SUBMITTAL (SF) 19-AUGUST-2022

WARE
STATE ROUTE 32 (PALMER ROAD) OVER WARE RIVER

STATE	FED. AID PROJ. NO.	SHEET NO.	TOTAL SHEETS
MA	STP(BR-OFF)-003S(606)X	78	125
PROJECT FILE NO.	605126		

STAGE CONSTRUCTION
STAGE 2A PLAN SUBSTRUCTURE

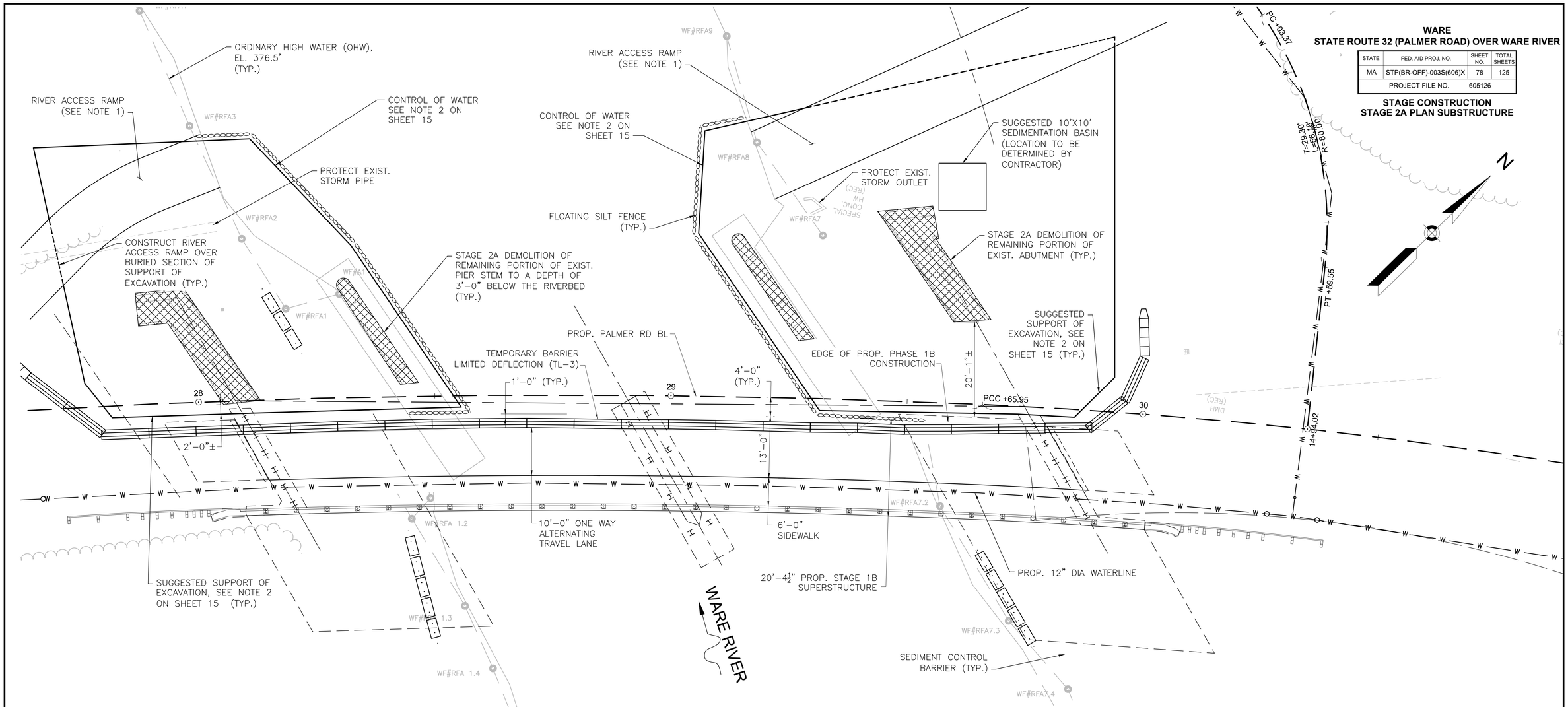

STAGE 2A – SUGGESTED SUBSTRUCTURE DEMOLITION PLAN

SCALE: 1" = 10'

SUGGESTED SEQUENCE OF CONSTRUCTION STAGE 2A (CONTINUED)

NOTES:

1. INSTALL FLOATING SILT FENCES AROUND THE LIMITS OF THE PROPOSED CONTROL OF WATER FOR INSTALLATION OF THE ABUTMENT RIPRAP AND THEN INSTALL THE CONTROL OF WATER IN THE RIVER ALONG THE NEWLY CONSTRUCTED PORTIONS OF THE SOUTHERN ABUTMENTS AND SUPPORT OF EXCAVATION TO SUPPORT THE ROADWAY ON THE SOUTH SIDE OF THE BRIDGE DURING DEMOLITION OF THE EXISTING ABUTMENTS. THE SUPPORT OF EXCAVATION IS SUGGESTED TO BE CONTINUOUS WITH THE PROPOSED CONTROL OF WATER FOR INSTALLATION OF THE ABUTMENT RIPRAP.
2. DEMOLISH THE REMAINING PORTIONS OF THE EXISTING PIER STEMS INSIDE THE CONTROL OF WATER TO A DEPTH OF 3'-0" BELOW THE RIVERBED. ALL DEMOLITION WORK SHALL BE PERFORMED EITHER FROM LAND INSIDE THE CONTROL OF WATER OR FROM THE WORK PLATFORMS IN THE RIVER. IF DEWATERING IS REQUIRED, WATER SHALL BE PUMPED TO THE SEDIMENTATION BASIN AND NOT DISCHARGED DIRECTLY INTO THE RIVER. ANY RIVERBED MATERIAL REMOVED FOR DEMOLITION SHALL BE REPLACED WITH NATURAL RIVERBED MATERIALS TO RESTORE EXISTING CONDITIONS, IN ACCORDANCE WITH THE PROJECT SPECIFICATIONS. CARE SHALL BE TAKEN FOR ALL WORK PERFORMED IN THE RIVER IN ORDER TO MINIMIZE IMPACTS TO THE WATERWAY.
3. BRACE THE NEWLY CONSTRUCTED SOUTHERN SECTIONS OF THE ABUTMENTS, AS REQUIRED, TO MAINTAIN STABILITY. CAREFULLY DEMOLISH THE REMAINING SECTIONS OF THE EXISTING ABUTMENTS AND FILL THE VOIDS WITH GRAVEL BORROW, AS REQUIRED, COMPACTED IN ACCORDANCE WITH THE STANDARD SPECIFICATIONS.

NOTES:

1. RIVER ACCESS RAMPS SHALL BE DESIGNED BY THE CONTRACTOR TO STABILIZE THE SLOPE AND SURFACE FOR CONSTRUCTION EQUIPMENT AND ACTIVITIES, AND TO PREVENT OFFSITE TRACKING OF SEDIMENTS AND DEBRIS. THE CONTRACTOR SHALL REMOVE ALL ACCESS RAMPS, REGRADE, AND RESTORE THE AREAS TO THE FINAL CONDITION AFTER COMPLETION OF CONSTRUCTION ACTIVITIES.

9/10/2022	ISSUED FOR CONSTRUCTION
DATE	DESCRIPTION
THIS SHEET IS APPROVED FOR CONSTRUCTION BY MASSDOT AUTHORIZED SIGNATORY:	STATE BRIDGE ENGINEER
USE ONLY PRINTS OF LATEST DATE	

605126_BR19 STAGE CONSTRUCTION PLAN 6 - STAGE 2A SUBSTRUCTURE.DWG Plotted on 30-Jun-2022 8:33 AM
FINAL STRUCTURAL SUBMITTAL (SF) 19-AUGUST-2022

WARE
STATE ROUTE 32 (PALMER ROAD) OVER WARE RIVER

STATE	FED. AID PROJ. NO.	SHEET NO.	TOTAL SHEETS
MA	STP(BR-OFF)-003S(606)X	79	125
PROJECT FILE NO.	605126		

STAGE CONSTRUCTION
STAGE 2B PLAN SUBSTRUCTURE

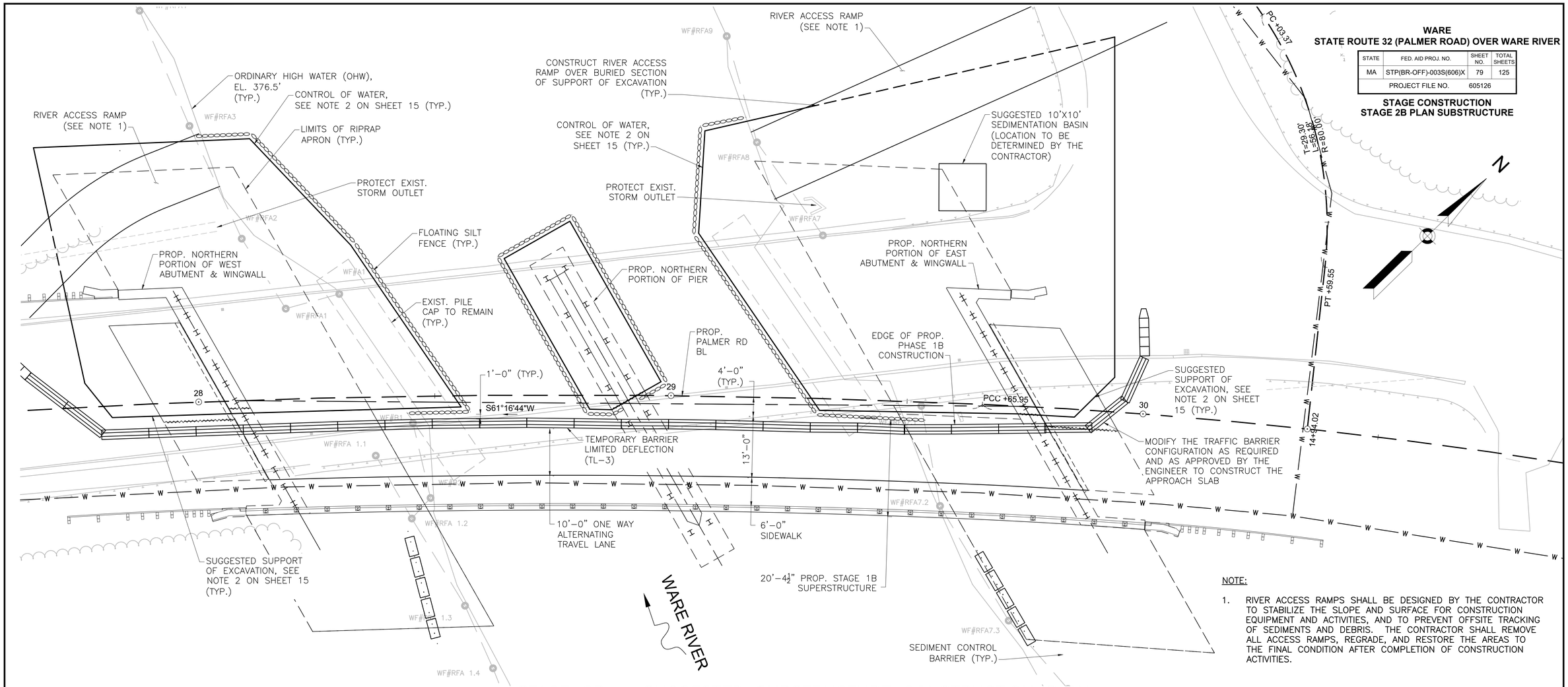

NOTE:

1. RIVER ACCESS RAMPS SHALL BE DESIGNED BY THE CONTRACTOR TO STABILIZE THE SLOPE AND SURFACE FOR CONSTRUCTION EQUIPMENT AND ACTIVITIES, AND TO PREVENT OFFSITE TRACKING OF SEDIMENTS AND DEBRIS. THE CONTRACTOR SHALL REMOVE ALL ACCESS RAMPS, REGRADE, AND RESTORE THE AREAS TO THE FINAL CONDITION AFTER COMPLETION OF CONSTRUCTION ACTIVITIES.

STAGE 2B – SUGGESTED SUBSTRUCTURE CONSTRUCTION PLAN

SCALE: 1" = 10'

SUGGESTED SEQUENCE OF CONSTRUCTION STAGE 2B

1. DRIVE THE REMAINING PILES FOR THE ABUTMENTS AND EXCAVATE THE 3'–0" DEEP BY 2'–6" MINIMUM WIDTH TRENCHES AT THE TOP OF THE PILES AND FILL IT WITH CRUSHED STONE. CONSTRUCT THE REMAINING NORTH PORTION OF THE CONCRETE INTEGRAL ABUTMENT PILE CAPS UP TO THE CONSTRUCTION JOINT AND THE GIRDER PEDESTALS WITH EMBEDDED ANCHORS. THE CLOSURE POUR FOR THE ABUTMENTS SHALL BE COMPLETED AFTER THE ABUTMENTS HAVE FULLY CURED AND PRIOR TO THE PLACEMENT OF THE RIPRAP AND BACKFILLING.

2. EXCAVATE THE SLOPES IN FRONT OF THE NORTHERN PORTIONS OF THE ABUTMENTS AND INSTALL THE GEOTEXTILE FABRIC, CRUSHED STONE, AND RIPRAP. BACKFILL THE ABUTMENTS AS THE RIPRAP IS INSTALLED TO MAINTAIN EQUAL LEVELS OF FILL ON BOTH SIDES OF THE ABUTMENTS. BACKFILLING OF THE ABUTMENTS SHALL ONLY EXTEND TO THE TOP OF THE RIPRAP (THE REMAINING DEPTH OF BACKFILL WILL BE INSTALLED AFTER THE DECK IS CONSTRUCTED). EXISTING RIVERBED MATERIAL SHALL BE RETAINED SO THAT IT CAN BE REPLACED AFTER CONSTRUCTION OF THE RIPRAP IS COMPLETE.

3. RESTORE THE RIVERBED AND SLOPE ALONG THE RIVERBANK ON TOP OF THE RIPRAP IN ACCORDANCE WITH THE PLANS. ONLY THE RIPRAP ALONG THE RIVER IS TO BE BURIED. THE DOWNSTREAM SECTIONS OF THE RIPRAP APRON THAT WRAP AROUND THE ABUTMENTS AND WINGWALLS IS TO REMAIN EXPOSED.

4. REMOVE THE CONTROL OF WATER AND REPAIR THE RIVERBED MATERIAL, AS REQUIRED, BEFORE REMOVING THE FLOATING SILT FENCES. MAINTAIN THE SUPPORT OF EXCAVATION, AS REQUIRED, TO SUPPORT THE ROADWAY ON THE SOUTH SIDE OF THE BRIDGE.

5. INSTALL A FLOATING SILT FENCE AROUND THE LIMITS OF THE PROPOSED PIER COFFERDAM. INSTALL THE COFFERDAM FOR CONSTRUCTION OF THE REMAINING NORTH PORTION OF THE PROPOSED PIER AND DRIVE THE PILES FOR THE PIER INSIDE OF THE COFFERDAM TO MINIMIZE IMPACTS TO THE WATERWAY. EXCAVATE INSIDE THE COFFERDAM AND INSTALL THE TREMIE SEAL. EXISTING RIVERBED MATERIAL SHALL BE RETAINED SO THAT IT CAN BE REPLACED AFTER CONSTRUCTION OF THE PIER IS COMPLETE. DEWATERING OF THE COFFERDAM SHALL BE PUMPED TO THE SEDIMENTATION BASIN AND NOT DISCHARGED DIRECTLY INTO THE RIVER. ALL WORK TO INSTALL THE FLOATING SILT FENCE, COFFERDAM, AND TREMIE SEAL AND TO DRIVE THE PILES SHALL BE PERFORMED FROM LAND BEHIND THE EROSION AND SEDIMENTATION CONTROLS OR FROM THE WORK PLATFORMS IN THE RIVER. INSTALLATION OF THE PIER COFFERDAM SHALL NOT COMMENCE UNTIL AFTER THE CONTROL OF WATER FOR THE ABUTMENT RIPRAP INSTALLATION HAS BEEN REMOVED.

6. CONSTRUCT THE REMAINING CONCRETE PIER PILE CAP AND STEM WALL.

7. INSTALL THE PIER RIPRAP BETWEEN THE PILE CAP AND COFFERDAM AND RESTORE THE RIVERBED ON TOP OF THE RIPRAP AND THE PILE CAP TO THE PRECONSTRUCTION CONDITIONS. REMOVE THE COFFERDAM AND REPAIR THE RIVERBED MATERIAL, AS REQUIRED, BEFORE REMOVING THE FLOATING SILT FENCE.

9/10/2022	ISSUED FOR CONSTRUCTION
DATE	DESCRIPTION

THIS SHEET IS APPROVED FOR CONSTRUCTION BY MASSDOT
AUTHORIZED SIGNATORY: STATE BRIDGE ENGINEER

USE ONLY PRINTS OF LATEST DATE

605126_BR20 STAGE CONSTRUCTION PLAN 7 - STAGE 2B SUBSTRUCTURE.DWG Plotted on 30-Jun-2022 8:33 AM
FINAL STRUCTURAL SUBMITTAL (SF) 19-AUGUST-2022

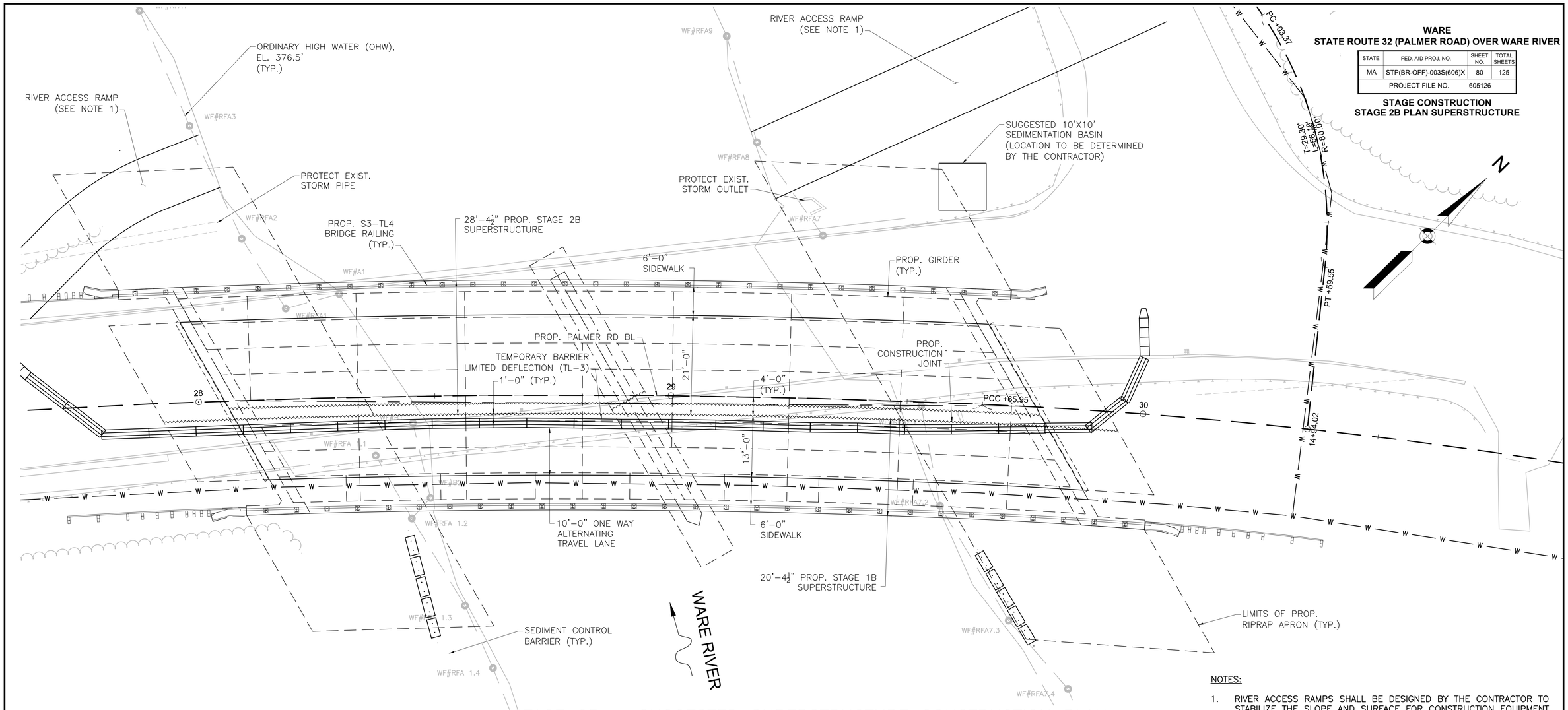

WARE
STATE ROUTE 32 (PALMER ROAD) OVER WARE RIVER

STATE	FED. AID PROJ. NO.	SHEET NO.	TOTAL SHEETS
MA	STP(BR-OFF)-003S(606)X	80	125
PROJECT FILE NO.	605126		

STAGE CONSTRUCTION
STAGE 2B PLAN SUPERSTRUCTURE

STAGE 2B – SUGGESTED SUPERSTRUCTURE CONSTRUCTION PLAN

SCALE: 1" = 10'

NOTES:

1. RIVER ACCESS RAMPS SHALL BE DESIGNED BY THE CONTRACTOR TO STABILIZE THE SLOPE AND SURFACE FOR CONSTRUCTION EQUIPMENT AND ACTIVITIES, AND TO PREVENT OFFSITE TRACKING OF SEDIMENTS AND DEBRIS. THE CONTRACTOR SHALL REMOVE ALL ACCESS RAMPS, REGRADE, AND RESTORE THE AREAS TO THE FINAL CONDITION AFTER COMPLETION OF CONSTRUCTION ACTIVITIES.

SUGGESTED SEQUENCE OF CONSTRUCTION STAGE 2B (CONTINUED)

1. INSTALL THE ERECTION PADS ON THE GIRDER PEDESTALS AND ERECT STEEL GIRDERS G5 THROUGH G9. CONNECT ALL END AND INTERIOR DIAPHRAGMS.
2. CONSTRUCT THE REMAINING SECTIONS OF THE CONCRETE INTEGRAL ABUTMENTS AND APPROACH SLAB SHELVES.
3. ATTACH THE SHEAR STUDS TO THE TOPS OF THE GIRDERS IN ACCORDANCE WITH THE DIMENSIONS PROVIDED ON THE STEEL DETAILS SHOWN ON SHEET 33 OF 42.
4. CONSTRUCT THE CAST-IN-PLACE COMPOSITE DECK SLAB IN ACCORDANCE WITH THE DECK PLACEMENT SEQUENCE SHOWN ON SHEET 39 OF 42. THE DECK CLOSURE POUR SHALL BE POURED AFTER THE DECK CONCRETE HAS FULLY CURED AND IN ACCORDANCE WITH THE DECK PLACEMENT SEQUENCE.
5. FINISH BACKFILLING BEHIND THE INTEGRAL ABUTMENTS AND CONSTRUCT THE NORTHERN PORTIONS OF THE APPROACH SLABS.
6. CONSTRUCT THE NORTH SIDEWALK AND THEN INSTALL THE S3-TL4 BRIDGE RAILING AFTER THE SIDEWALK HAS CURED.
7. INSTALL THE MEMBRANE WATERPROOFING AND BRIDGE SUPERPAVE PROTECTIVE COURSE.
8. REMOVE ALL WORK PLATFORMS FROM THE RIVER AND RESTORE THE RIVERBED MATERIAL AS REQUIRED.
9. DEMOLISH AND REGRADE THE SEDIMENTATION BASIN(S).
10. REMOVE THE RIVER ACCESS RAMPS AND REGRADE AS REQUIRED.
11. COMPLETE ALL APPROACH ROADWAY, SIDEWALK, AND GUARDRAIL CONSTRUCTION.
12. COMPLETE FINAL PAVEMENT OF ALL BRIDGE AND ROADWAY SURFACES. ADD TRAFFIC MARKINGS.
13. LOAM AND SEED.
14. REMOVE SOIL EROSION AND SEDIMENTATION CONTROLS.

DATE	DESCRIPTION
9/10/2022	ISSUED FOR CONSTRUCTION

THIS SHEET IS APPROVED FOR CONSTRUCTION BY MASSDOT
AUTHORIZED SIGNATORY: STATE BRIDGE ENGINEER
USE ONLY PRINTS OF LATEST DATE

605126_BR21 STAGE CONSTRUCTION PLAN 8 - STAGE 2B SUPERSTRUCTURE.DWG Plotted on 30-Jun-2022 8:33 AM
FINAL STRUCTURAL SUBMITTAL (SF) 19-AUGUST-2022

WARE
STATE ROUTE 32 (PALMER ROAD) OVER WARE RIVER

STATE	FED. AID PROJ. NO.	SHEET NO.	TOTAL SHEETS
MA	STP(BR-OFF)-003S(606)X	81	125
PROJECT FILE NO.	605126		

ENVIRONMENTAL IMPACT AREAS

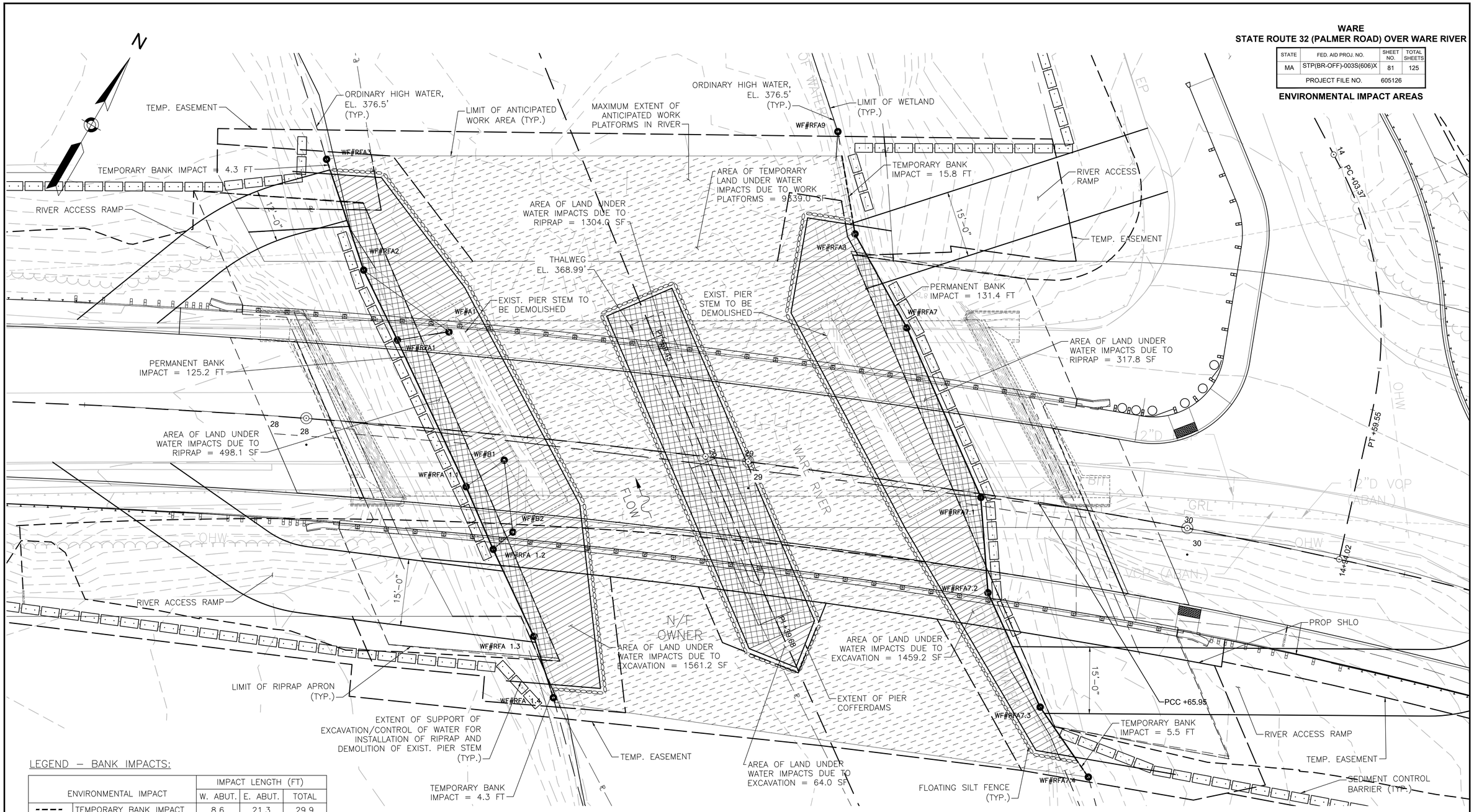

ENVIRONMENTAL IMPACTS & WATER CONTROL PLAN

SCALE: 1"=10'

LEGEND – BANK IMPACTS:

ENVIRONMENTAL IMPACT		IMPACT LENGTH (FT)		
		W. ABUT.	E. ABUT.	TOTAL
- - - -	TEMPORARY BANK IMPACT	8.6	21.3	29.9
———	PERMANENT BANK IMPACT	125.2	131.4	256.6

LEGEND – LAND UNDER WATER IMPACTS:

ENVIRONMENTAL IMPACT		IMPACT AREA (FT^2)			
		W. ABUT.	PIER	E. ABUT.	TOTAL
	VEGETATED WETLAND IMPACT	N/A	N/A	N/A	0*
	TEMPORARY LAND UNDER WATER IMPACT DUE TO WORK PLATFORM SUPPORTS	N/A	N/A	N/A	9,339
	PERMANENT LAND UNDER WATER IMPACT DUE TO RIPRAP	498	1,304	318	2,120
	PERMANENT LAND UNDER WATER IMPACT DUE TO EXCAVATION/DREDGING	1,561	64	1,459	3,084
	TOTAL PERMANENT LAND UNDER WATER IMPACTS	2,059	1,368	1,777	5,204

* AREAS OF VEGETATED WETLAND ARE BELOW ORDINARY HIGH WATER AND THEREFORE DO NOT REQUIRE REPLICATION AREAS.

NOTE:
1. THIS SHEET IS INTENDED FOR SUGGESTED ESTIMATE OF THE ENVIRONMENTAL IMPACT ONLY AND SHALL NOT BE CONSTRUED AS DESIGN OF TEMPORARY SUPPORT OF EXCAVATION, NOR TEMPORARY CONTROL OF WATER, NOR TEMPORARY COFFERDAM. SEE SPECIAL PROVISIONS FOR ITEMS 950.11, 990.11, AND 991.11.

DATE	DESCRIPTION
9/10/2022	ISSUED FOR CONSTRUCTION

THIS SHEET IS APPROVED FOR CONSTRUCTION BY MASSDOT
AUTHORIZED SIGNATORY: STATE BRIDGE ENGINEER
USE ONLY PRINTS OF LATEST DATE

605126_BR22 ENVIRONMENTAL IMPACT AREAS.DWG Plotted on: 30-Jun-2022 8:33 AM
SECOND STRUCTURAL SUBMITTAL - REV 1 01-JULY-2022

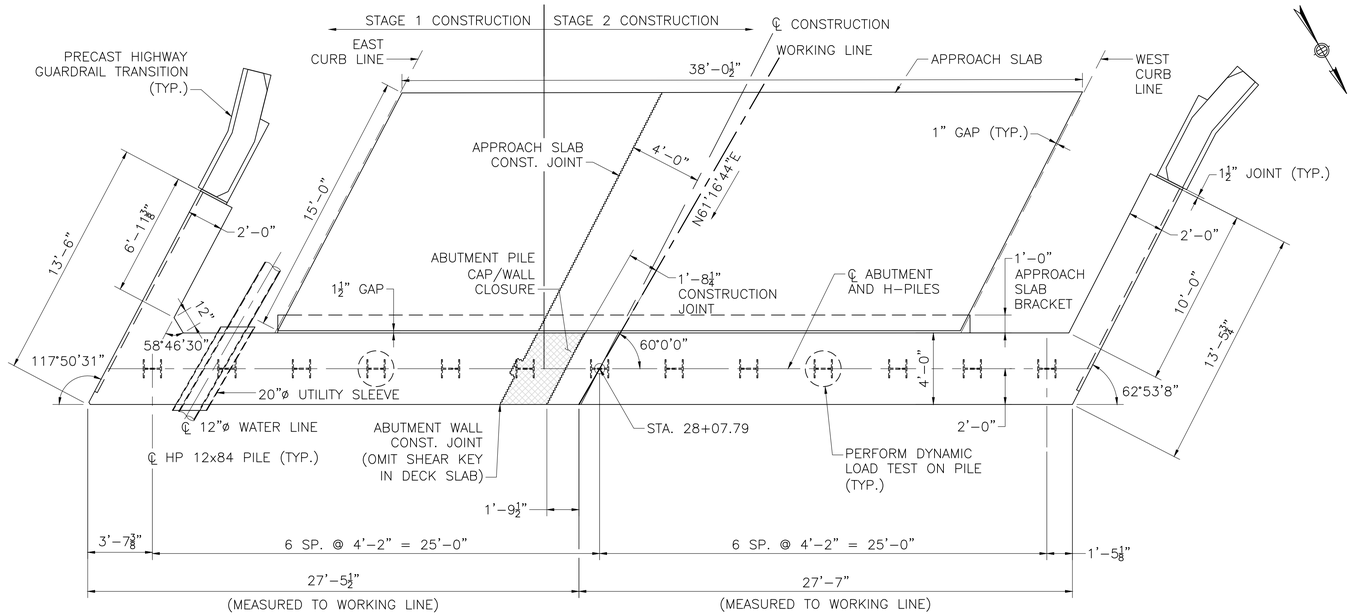

WEST ABUTMENT PLAN

SCALE: ¼" = 1'-0"

INTEGRAL ABUTMENT PILE NOTES:

1. A TRENCH WITH A DEPTH OF 3'-0" AND A MINIMUM WIDTH OF 2'-6" SHALL BE CONSTRUCTED DIRECTLY BELOW THE BOTTOM OF THE PILE CAP ELEVATION. AFTER THE PILES ARE DRIVEN, THE TRENCH SHALL BE FILLED WITH CRUSHED STONE (M2.01.6).
2. ALL SPLICES SHALL HAVE COMPLETE PENETRATION BUTT WELDS. THERE SHALL BE NO SPLICES WITHIN THE TOP 20 FEET OF PILE. SPLICE WELDS SHALL BE 100% UT.
3. THE FACTORED AXIAL DESIGN LOAD PER PILE IS 233 KIPS AS PER AASHTO LRFD BRIDGE DESIGN SPECIFICATIONS STRENGTH I LOAD COMBINATION.
4. THE FACTORED STRUCTURAL RESISTANCE PER PILE IS 861 KIPS AND IS THE PRODUCT OF THE NOMINAL STRUCTURAL RESISTANCE OF 1230 KIPS AND A RESISTANCE FACTOR OF 0.7.
5. PILES SHALL BE DRIVEN TO BEDROCK WITH AN APPROXIMATE TIP ELEVATION OF 325 FEET. HEAVY DUTY PILE SHOES SHALL BE INSTALLED ON THE TIPS OF ALL PILES. PREFABRICATED PILE SHOES MAY BE USED IF APPROVED BY THE ENGINEER.
6. DETERMINATION OF THE DRIVEN PILE RESISTANCE, PILE DRIVING CRITERIA AND PILE INTEGRITY SHALL BE PERFORMED USING DYNAMIC LOAD TESTING WITH A RESISTANCE FACTOR OF 0.65. DYNAMIC LOAD TEST SHALL BE PERFORMED ON FOUR (4) ABUTMENT PILES TOTAL, TWO (2) PER ABUTMENT, AT THE LOCATIONS SHOWN ON THE EAST AND WEST ABUTMENT PLANS. PILES SHALL BE INSTALLED TO ACHIEVE A FACTORED DRIVEN RESISTANCE EQUAL TO OR GREATER THAN THE FACTORED AXIAL DESIGN LOAD.
7. THE CONTRACTOR SHALL SUBMIT A PILE SCHEDULE, PILE INSTALLATION, AND PILE DRIVING/TESTING PLAN FOR REVIEW AND APPROVAL OF THE ENGINEER.
8. PILES SHALL CONFORM TO AASHTO M270 GRADE 50.

WARE
STATE ROUTE 32 (PALMER ROAD) OVER WARE RIVER

STATE	FED. AID PROJ. NO.	SHEET NO.	TOTAL SHEETS
MA	STP(BR-OFF)-003S(606)X	82	125
PROJECT FILE NO. 605126			

WEST ABUTMENT PLAN AND ELEVATION

REQUIRED PILE LOCATION TOLERANCES:

1. CONFORMANCE TO THE FOLLOWING TOLERANCES IS OF EXTREME IMPORTANCE TO FOUNDATIONS OF THIS TYPE.
2. PRIOR TO DRIVING, EACH ABUTMENT PILE SHALL BE HELD BY TEMPLATE TO WITHIN 1" OF PLAN LOCATION.
3. AFTER EACH ABUTMENT PILE IS DRIVEN, THE TOP OF THE PILE SHALL BE WITHIN 3" OF PLAN LOCATION.

PILE SPLICE NOTES:

1. ALL WELDS SHALL BE COMPLETE PENETRATION AND SHALL CONFORM TO THE ANSI/AASHTO/AWS BRIDGE WELDING CODE, D1.5.
2. WELDING PROCEDURE SPECIFICATIONS MUST BE APPROVED BY THE ENGINEER PRIOR TO WELDING.
3. WHENEVER POSSIBLE ALL PILES SHALL BE SPLICED ON THE GROUND IN THE FLAT POSITION.
4. WEB SHALL BE COPED TO ALLOW FOR COMPLETE PENETRATION WELDING OF FLANGES.
5. WELDED MECHANICAL PILE SPLICERS MAY BE USED PROVIDED THAT COMPLETE DETAILS AND WELDING PROCEDURES HAVE BEEN REVIEWED AND APPROVED BY THE ENGINEER.

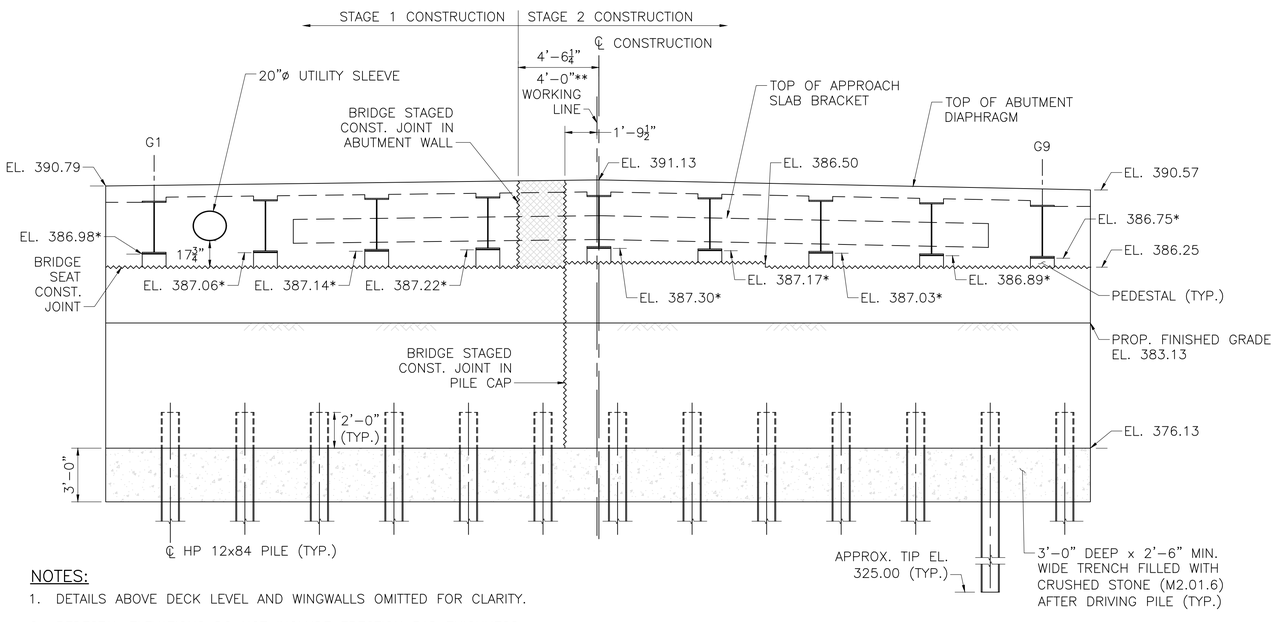

NOTES:

1. DETAILS ABOVE DECK LEVEL AND WINGWALLS OMITTED FOR CLARITY.
2. PEDESTAL ELEVATIONS DO NOT INCLUDE ERECTION PAD THICKNESS.

* ELEVATIONS ARE SHOWN AT CENTERLINE OF ABUTMENT/BEARING.
** DIMENSIONS MEASURED PERPENDICULAR TO CENTERLINE OF CONSTRUCTION AND PERPENDICULAR TO THE WORKING LINE AT THE CENTERLINE OF BEARING.

WEST ABUTMENT ELEVATION

SCALE: ¼" = 1'-0"

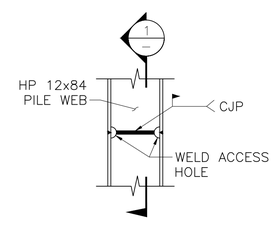

PILE SPLICE ELEVATION

SCALE: ¾" = 1'-0"

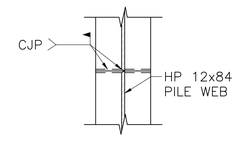

SECTION 1 –

SCALE: ¾" = 1'-0"

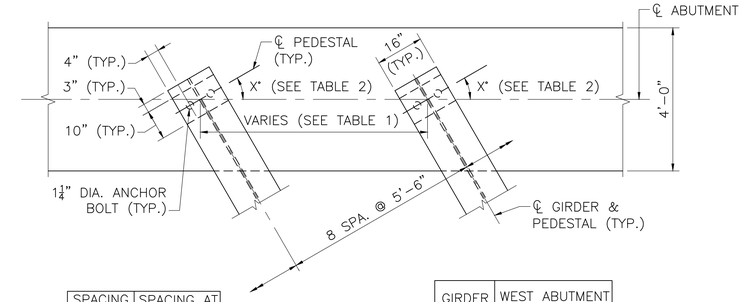

SPACING BETWEEN GIRDERS	SPACING AT ℄ WEST ABUTMENT
G1–G2	6'–2 11/16"
G2–G3	6'–2 6/8"
G3–G4	6'–2 9/16"
G4–G5	6'–2½"
G5–G6	6'–2 7/16"
G6–G7	6'–2 3/8"
G7–G8	6'–2 5/16"
G8–G9	6'–2 5/16"

TABLE 1

GIRDER	WEST ABUTMENT SKEW (X)
1	27° 56' 07"
2	27° 51' 04"
3	27° 46' 03"
4	27° 41' 04"
5	27° 36' 06"
6	27° 31' 10"
7	27° 26' 17"
8	27° 21' 25"
9	27° 16' 34"

TABLE 2

PEDESTAL PLAN

SCALE: ½" = 1'-0"

DATE	DESCRIPTION
9/10/2022	ISSUED FOR CONSTRUCTION

THIS SHEET IS APPROVED FOR CONSTRUCTION BY MASSDOT
AUTHORIZED SIGNATORY: STATE BRIDGE ENGINEER
USE ONLY PRINTS OF LATEST DATE

605126_BR23-27 ABUTMENT DETAILS (W05015).DWG Plotted on 17-Sep-2022 11:00 PM
FINAL STRUCTURAL SUBMITTAL (SF) 19-AUGUST-2022

STATE	FED. AID PROJ. NO.	SHEET NO.	TOTAL SHEETS
MA	STP(BR-OFF)-003S(606)X	83	125
PROJECT FILE NO.	605126		

EAST ABUTMENT PLAN AND ELEVATION

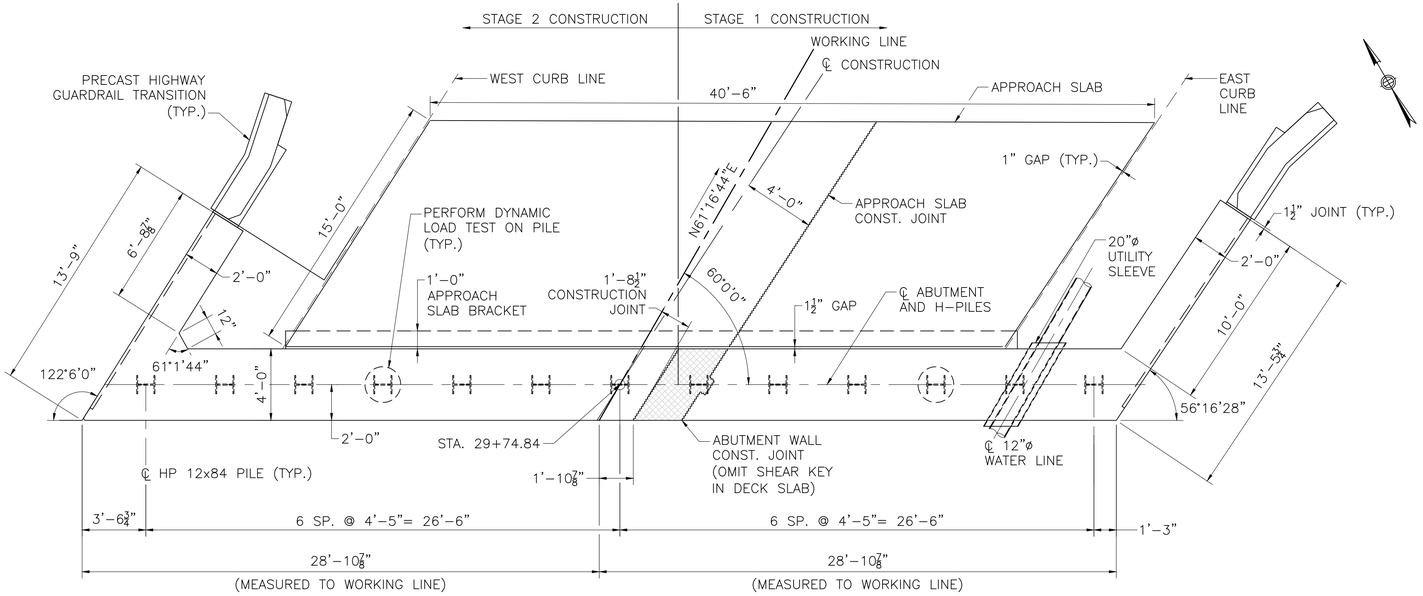

EAST ABUTMENT PLAN

SCALE: ¼" = 1'-0"

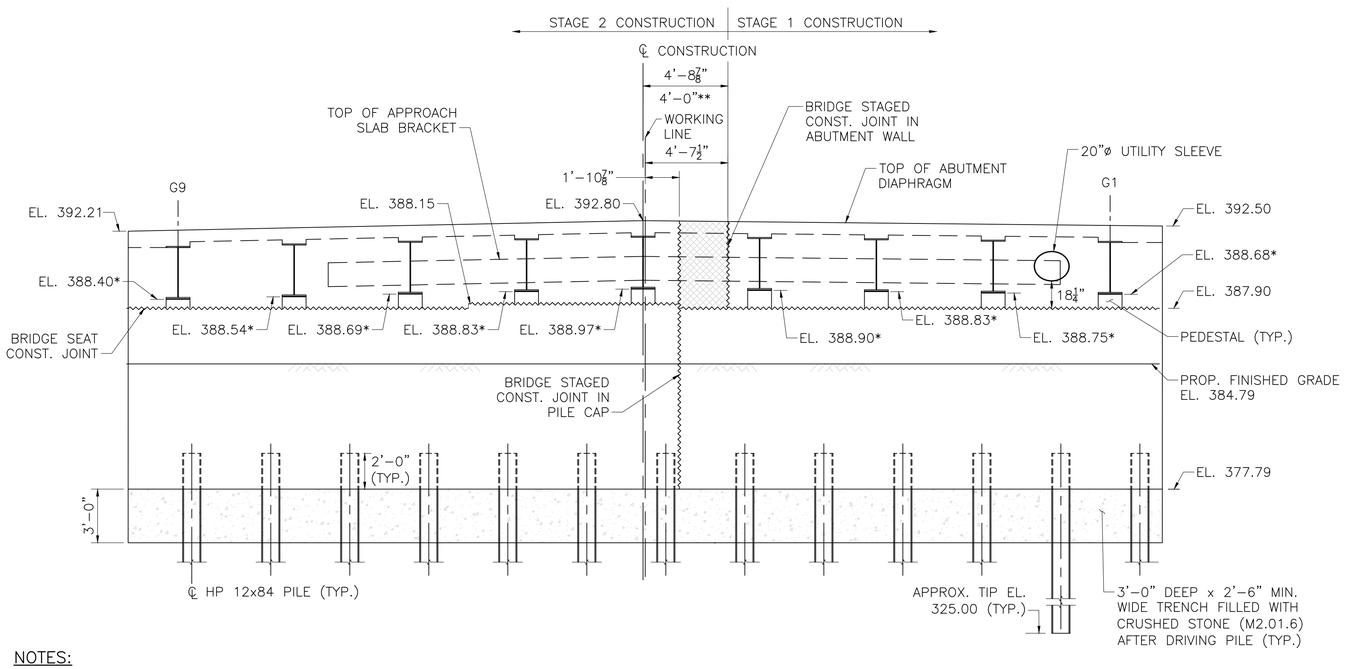

NOTES:

1. DETAILS ABOVE DECK LEVEL AND WINGWALLS OMITTED FOR CLARITY.
2. PEDESTAL ELEVATIONS DO NOT INCLUDE ERECTION PAD THICKNESS.

* ELEVATIONS ARE SHOWN AT CENTERLINE OF ABUTMENT/BEARING.
** DIMENSIONS MEASURED PERPENDICULAR TO CENTERLINE OF CONSTRUCTION AND PERPENDICULAR TO THE WORKING LINE AT THE CENTERLINE OF BEARING.

EAST ABUTMENT ELEVATION

SCALE: ¼" = 1'-0"

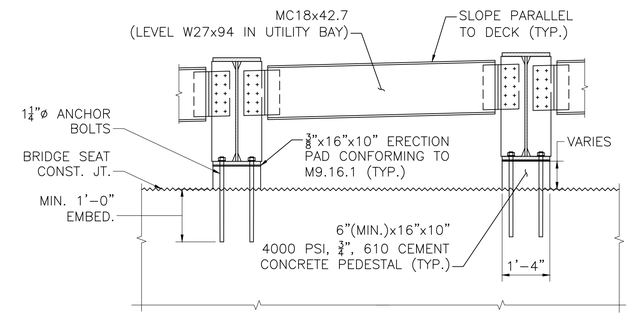

BEAM END DETAILS

SCALE: ½" = 1'-0"

NOTE:
REFER TO "WEST ABUTMENT ELEVATION" AND "EAST ABUTMENT ELEVATION" VIEWS ON SHEETS 23 AND 24 FOR PEDESTAL HEIGHTS AT EACH GIRDER.

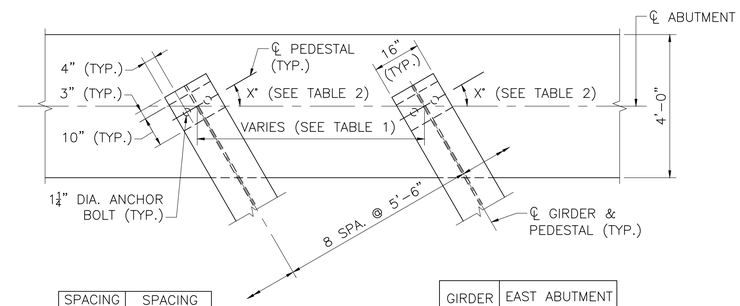

SPACING BETWEEN GIRDERS	SPACING AT ℄ EAST ABUTMENT
G1–G2	6'-6 7/16"
G2–G3	6'-6⅜"
G3–G4	6'-6 5/16"
G4–G5	6'-6 9/16"
G5–G6	6'-6¼"
G6–G7	6'-6"
G7–G8	6'-5 15/16"
G8–G9	6'-5⅞"

TABLE 1

GIRDER	EAST ABUTMENT SKEW (X)
1	32° 47' 31"
2	32° 41' 23"
3	32° 35' 18"
4	32° 29' 14"
5	32° 23' 13"
6	32° 17' 14"
7	32° 11' 18"
8	32° 05' 24"
9	31° 59' 33"

TABLE 2

PEDESTAL PLAN

SCALE: ½" = 1'-0"

NOTE:
FOR ADDITIONAL NOTES, REFER TO "INTEGRAL ABUTMENT PILE NOTES" 1 TO 7 AND "REQUIRED PILE LOCATION TOLERANCES" NOTES 1 TO 3 IN "WEST ABUTMENT PLAN AND ELEVATION" SHEET.

DATE	DESCRIPTION
9/10/2022	ISSUED FOR CONSTRUCTION

THIS SHEET IS APPROVED FOR CONSTRUCTION BY MASSDOT
AUTHORIZED SIGNATORY: STATE BRIDGE ENGINEER
USE ONLY PRINTS OF LATEST DATE

605126_BR23-27 ABUTMENT DETAILS (W05015).DWG Plotted on 17-Sep-2022 11:00 PM
FINAL STRUCTURAL SUBMITTAL (SF) 19-AUGUST-2022

WARE
STATE ROUTE 32 (PALMER ROAD) OVER WARE RIVER

STATE	FED. AID PROJ. NO.	SHEET NO.	TOTAL SHEETS
MA	STP(BR-OFF)-003S(606)X	84	125
PROJECT FILE NO.	605126		

INTEGRAL ABUTMENT DETAILS

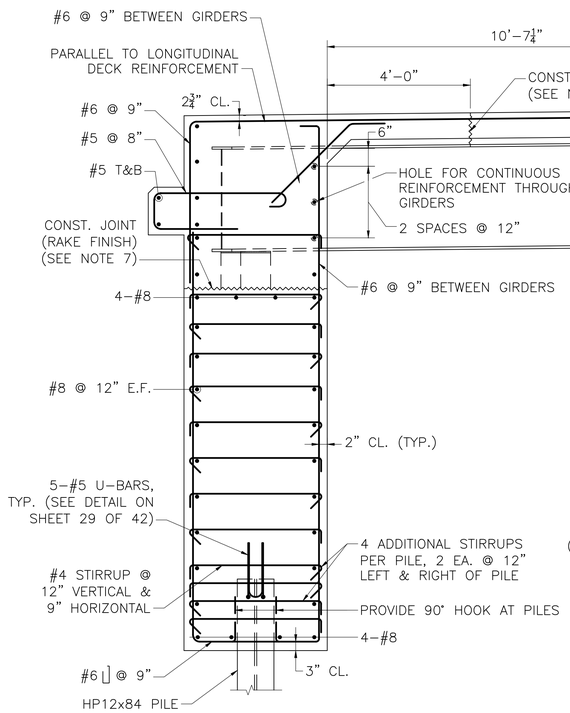

TYPICAL INTEGRAL ABUTMENT REINFORCEMENT

SECTION 2
SCALE: ½" = 1'–0"

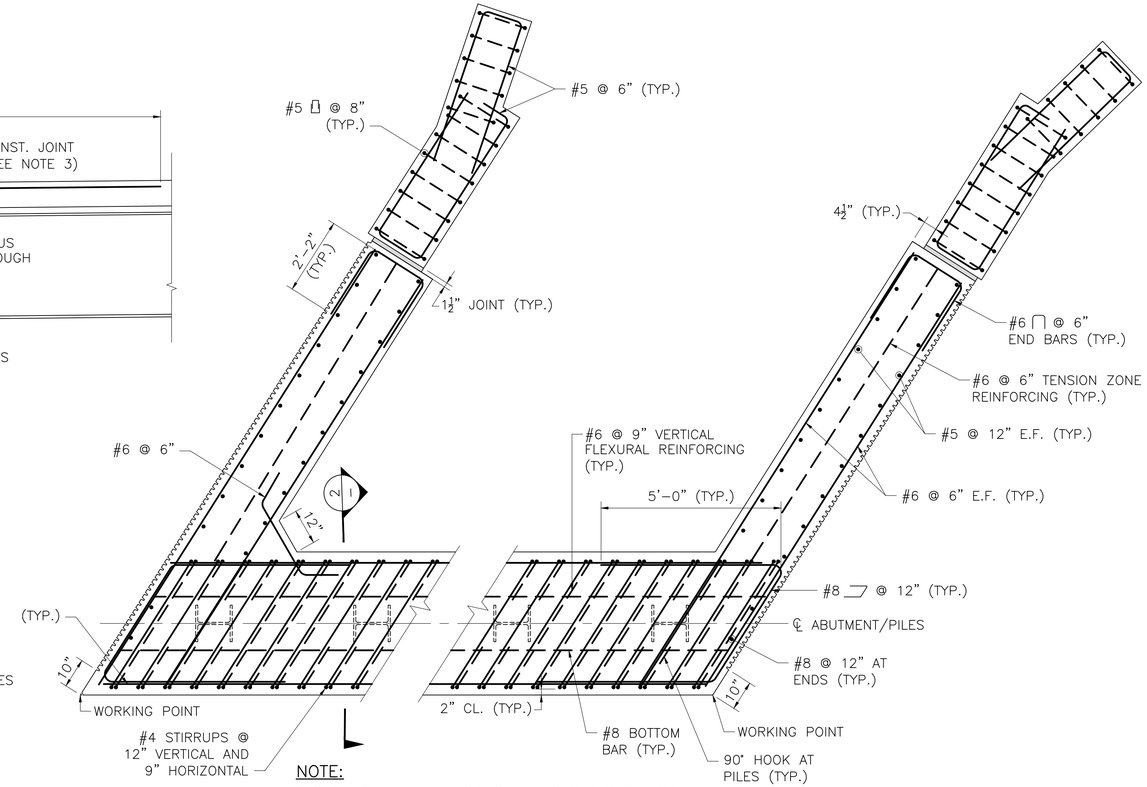

NOTE:
SECTION IS TAKEN AT HORIZONTAL CONSTRUCTION JOINT.

TYPICAL ABUTMENT REINFORCEMENT PLAN
SCALE: ½" = 1'–0"

WORKING POINT NORTHING/EASTING TABLE	
WORKING POINT NORTHWEST	N2913052.9458 E443420.7163
WORKING POINT NORTHEAST	N2913022.9303 E443470.1240
WORKING POINT SOUTHWEST	N2912974.2280 E443279.4425
WORKING POINT SOUTHEAST	N2912945.6485 E443326.4864

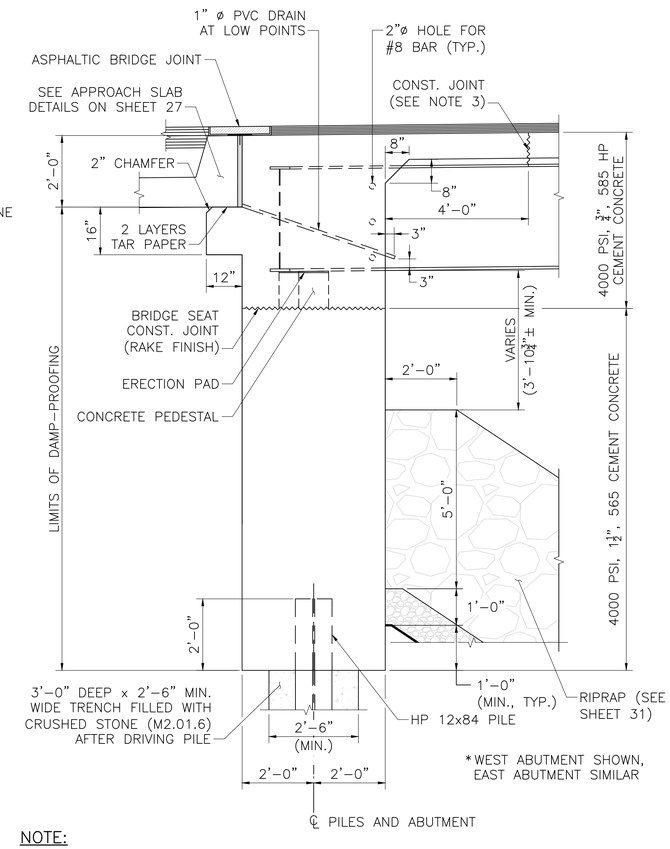

*WEST ABUTMENT SHOWN, EAST ABUTMENT SIMILAR

NOTE:
BEARING STIFFENER AND DIAPHRAGM ARE NOT SHOWN FOR CLARITY.

INTEGRAL ABUTMENT SECTION
SCALE: ½" = 1'–0"

CONSTRUCTION NOTES:

1. ALL REINFORCEMENT SHALL BE EPOXY COATED.
2. DECK SLAB REINFORCEMENT NOT SHOWN FOR CLARITY. CONTINUE DECK SLAB REINFORCEMENT TO BACK OF ABUTMENT.
3. THE CONTRACTOR SHALL FOLLOW THE DECK PLACEMENT SEQUENCE AS SHOWN ON SHEET 39.
4. ALL CONCRETE SHALL CONTAIN SUPERPLASTICIZER TO ENSURE ADEQUATE CONSOLIDATION.
5. BOTH ABUTMENTS SHALL BE BACKFILLED SIMULTANEOUSLY, EXCEPT DURING RIPRAP INSTALLATION. NO MORE THAN TWO (2) FEET OF DIFFERENTIAL BACKFILL HEIGHT SHALL BE PERMITTED. DURING RIPRAP INSTALLATION, BACKFILLING SHALL PROGRESS AT THE SAME LEVEL AS THE RIPRAP. REMAINING BACKFILLING ABOVE THE TOP OF RIPRAP ELEVATION SHALL NOT BEGIN UNTIL THE ABUTMENT AND DECK CONSTRUCTION IS COMPLETE.
6. THE CONTRACTOR MAY USE MECHANICAL REINFORCING BAR SPLICERS IN LIEU OF TENSION LAP SPLICES TO FACILITATE CONSTRUCTION. HOWEVER, NO ADDITIONAL COMPENSATION WILL BE PROVIDED FOR THE USE OF MECHANICAL REINFORCING BAR SPLICERS.
7. MECHANICAL REINFORCING BAR SPLICERS SHALL BE INSTALLED AT STAGE CONSTRUCTION JOINTS FOR ALL TRANSVERSE REINFORCEMENT.
8. THE TOP OF THE APPROACH SLAB SHALL MATCH THE TOP OF THE ABUTMENT DIAPHRAGM.

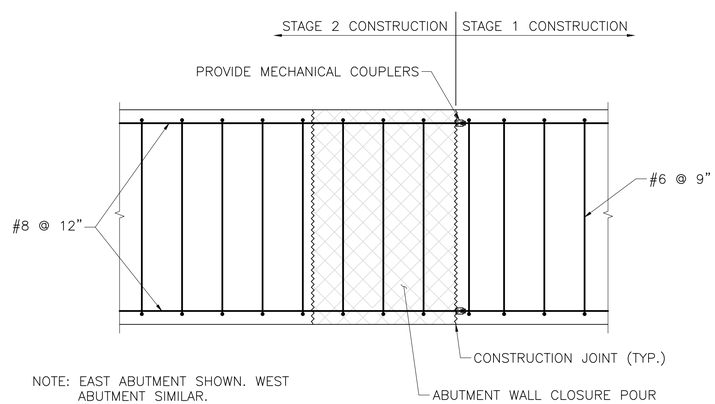

NOTE: EAST ABUTMENT SHOWN. WEST ABUTMENT SIMILAR.

PLAN VIEW AT ABUTMENT CLOSURE ABOVE PILE CAP
SCALE: ¾" = 1'–0"

DATE	DESCRIPTION
9/10/2022	ISSUED FOR CONSTRUCTION

THIS SHEET IS APPROVED FOR CONSTRUCTION BY MASSDOT
AUTHORIZED SIGNATORY: STATE BRIDGE ENGINEER
USE ONLY PRINTS OF LATEST DATE

605126_BR23-27 ABUTMENT DETAILS (W05015).DWG Plotted on 14-Oct-2022 3:34 PM
FINAL STRUCTURAL SUBMITTAL (SF) 19-AUGUST-2022

WARE
STATE ROUTE 32 (PALMER ROAD) OVER WARE RIVER

STATE	FED. AID PROJ. NO.	SHEET NO.	TOTAL SHEETS
MA	STP(BR-OFF)-003S(606)X	85	125
PROJECT FILE NO. 605126			

WINGWALLS AND MISCELLANEOUS DETAILS

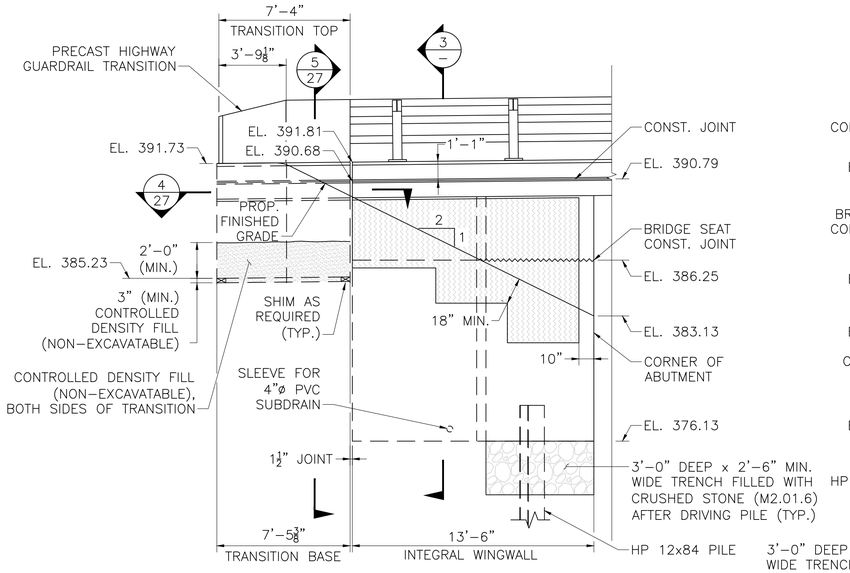

SOUTHWEST WINGWALL ELEVATION
SCALE: 1/4" = 1'-0"

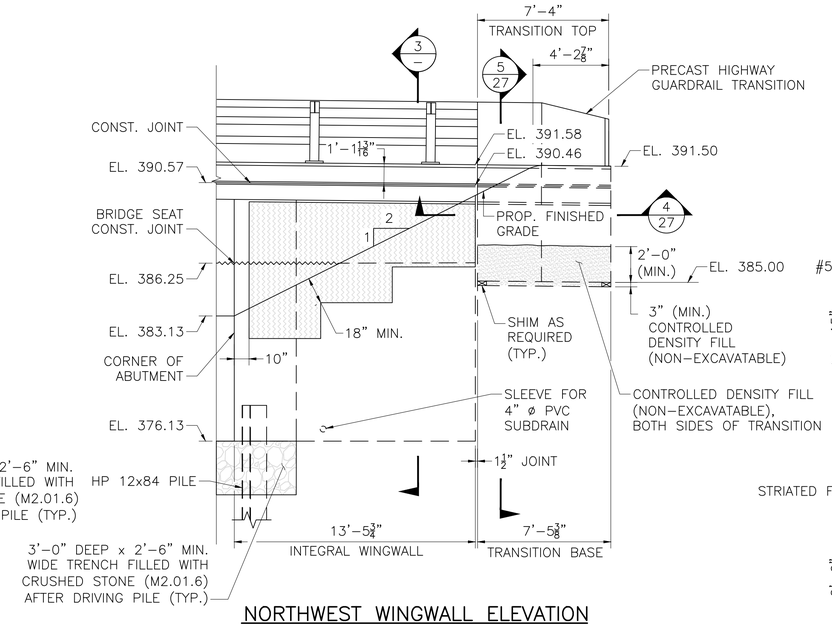

NORTHWEST WINGWALL ELEVATION
SCALE: 1/4" = 1'-0"

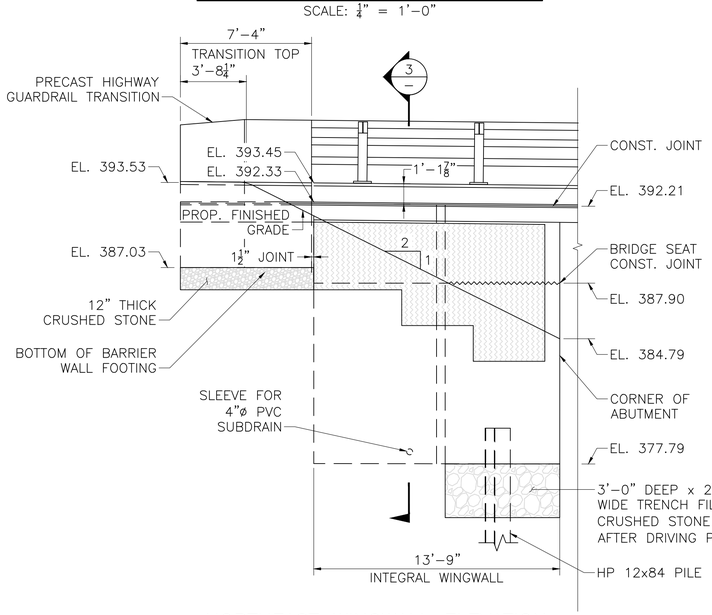

NORTHEAST WINGWALL ELEVATION
SCALE: 1/4" = 1'-0"

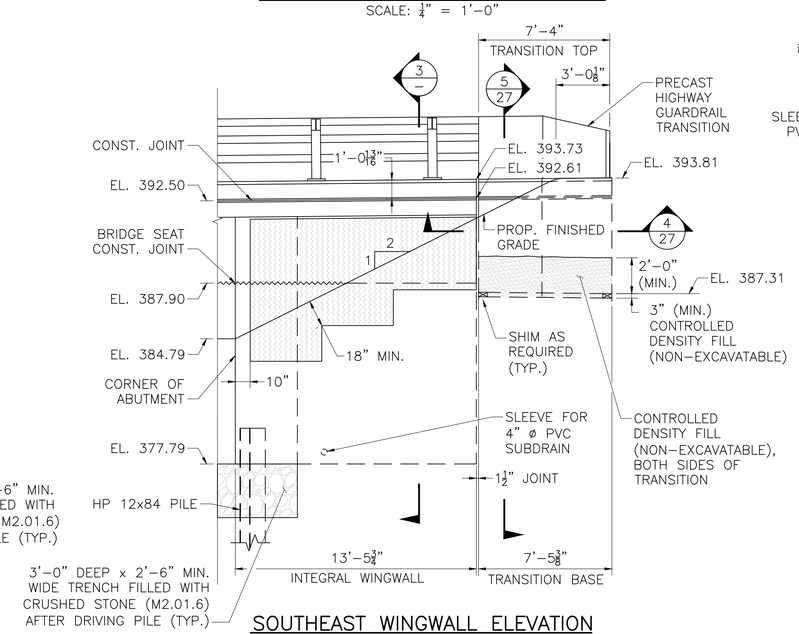

SOUTHEAST WINGWALL ELEVATION
SCALE: 1/4" = 1'-0"

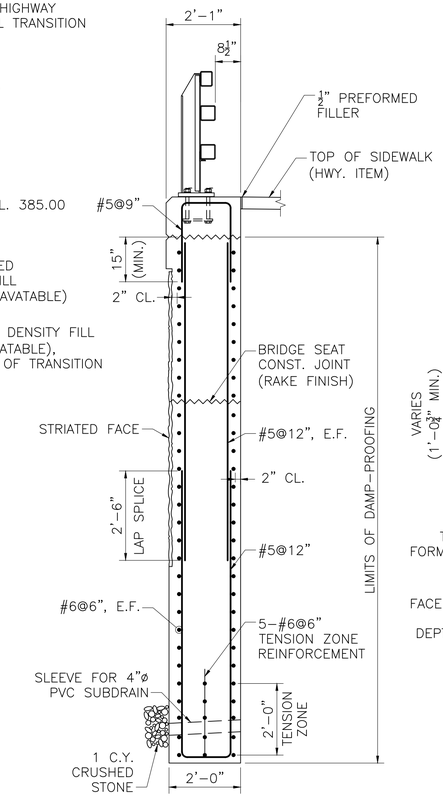

SECTION 3
SCALE: 1/2" = 1'-0"

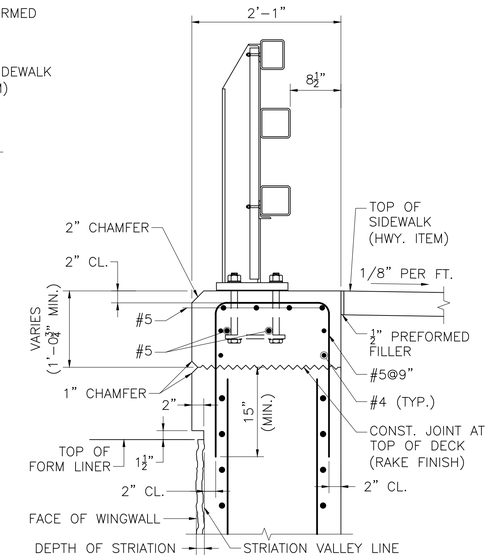

TOP OF INTEGRAL WINGWALL DETAIL AT SIDEWALK
SCALE: 1" = 1'-0"

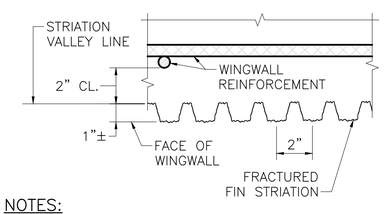

NOTES:

1. THE CONTRACTOR SHALL MAKE SURE THAT THE STRIATION FINS ARE PLUMB AND LINED UP VERTICALLY FROM PANEL TO PANEL FOR THE FULL HEIGHT OF THE WINGWALL.
2. THE HORIZONTAL JOINT MAY BE OMITTED IF THE CONTRACTOR CAN DEMONSTRATE THAT THE FORM LINER PANELS CAN BE INSTALLED END TO END WITHOUT CREATING A VISIBLE SEAM IN THE FINAL CAST CONCRETE.

TYPICAL STRIATION DETAIL
SCALE: 3" = 1'-0"

NOTES:

1. PLATE GIRDER WITH TYPE S3-TL4 RAILING SHOWN.
2. STRIATIONS SHALL BE PROVIDED ON WINGWALL ONLY. THEY SHALL NOT BE PROVIDED ON FRONT FACE OF ABUTMENTS.
3. RAILING PICKETS NOT SHOWN FOR CLARITY.

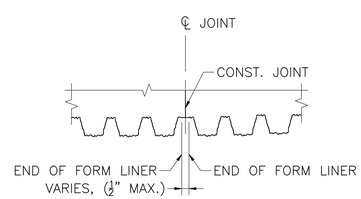

CONSTRUCTION JOINT
SCALE: 3" = 1'-0"

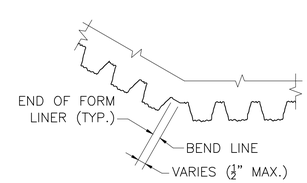

DETAIL AT WALL CORNER
SCALE: 3" = 1'-0"

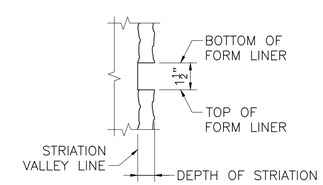

HORIZONTAL PANEL JOINT
SCALE: 3" = 1'-0"

9/10/2022	ISSUED FOR CONSTRUCTION
DATE	DESCRIPTION

THIS SHEET IS APPROVED FOR CONSTRUCTION BY MASSDOT AUTHORIZED SIGNATORY: STATE BRIDGE ENGINEER
USE ONLY PRINTS OF LATEST DATE

605126_BR23-27 ABUTMENT DETAILS (W05015).DWG Plotted on 17-Sep-2022 11:00 PM
FINAL STRUCTURAL SUBMITTAL (SF) 19-AUGUST-2022

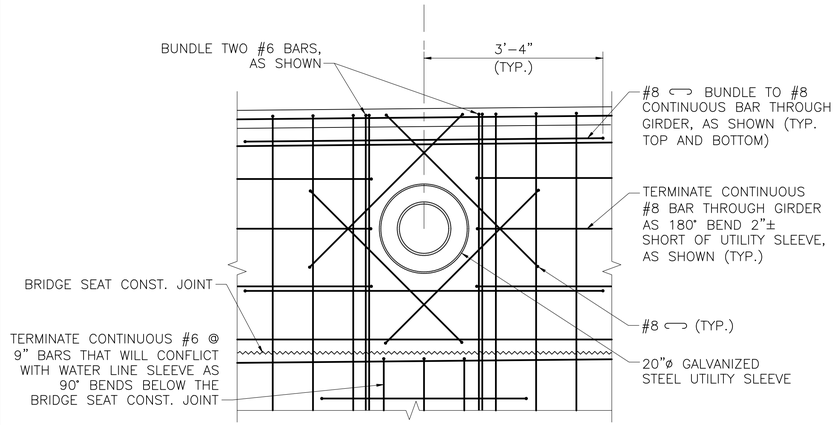

NOTES:

1. REINFORCEMENT AROUND UTILITY SLEEVES SHOWN IS TYPICAL ON THE FRONT AND REAR FACE OF ABUTMENT. SEE TYPICAL ABUTMENT REINFORCEMENT PLAN ON SHEET NO.17 FOR TYPICAL ABUTMENT REINFORCEMENT.
2. REINFORCEMENT LAP SPLICES IN TYPICAL ABUTMENT REINFORCEMENT NOT SHOWN.

ABUTMENT UTILITY SLEEVE REINFORCEMENT DETAIL – WATER

SCALE: $\frac{3}{4}$" = 1'–0"

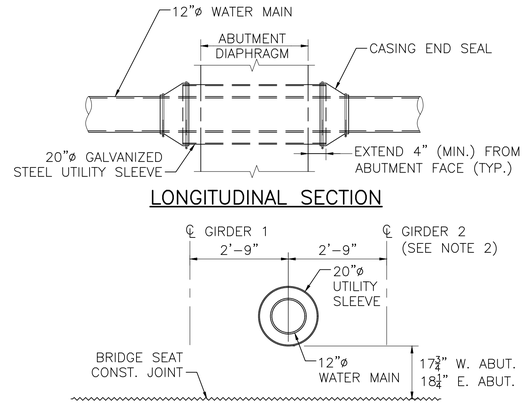

UTILITY DETAILS AT ABUTMENT

NOTES:

1. DIMENSIONS ARE SQUARE TO GIRDERS.
2. VIEW IS DRAWN NORMAL TO AND AT THE FRONT FACE OF ABUTMENT.
3. WEST ABUTMENT SHOWN. EAST ABUTMENT SIMILAR.
4. UTILITY SLEEVES SHALL BE STEEL PIPE CONFORMING TO ASTM A–53, TYPE S, GRADE B, STANDARD WEIGHT, PLAIN ENDS, HOT–DIP GALVANIZED AND SHALL BE SET IN THE FORMS PRIOR TO PLACING ABUTMENT DIAPHRAGM CONCRETE.
5. BEARING STIFFENERS AND DIAPHRAGMS NOT SHOWN FOR CLARITY.

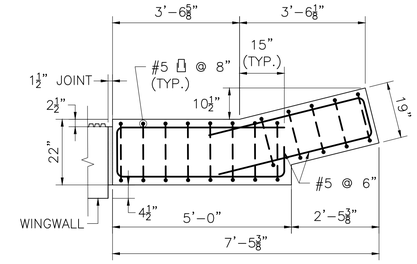

PRECAST HIGHWAY GUARDRAIL TRANSITION BASE

SECTION 4 / 26

SCALE: $\frac{1}{2}$" = 1'–0"

WARE

STATE ROUTE 32 (PALMER ROAD) OVER WARE RIVER

STATE	FED. AID PROJ. NO.	SHEET NO.	TOTAL SHEETS
MA	STP(BR-OFF)-003S(606)X	86	125
PROJECT FILE NO.	605126		

APPROACH SLAB, JOINT, AND MISC. DETAILS

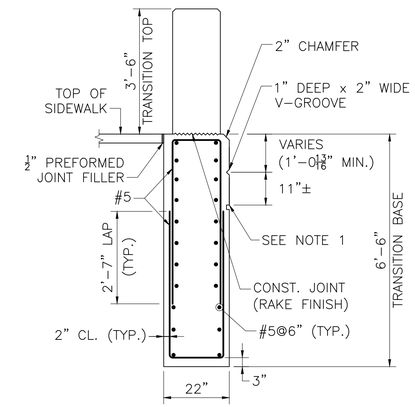

NOTES:

1. 1½" HIGH x 1" DEEP GROOVE. ALIGN WITH GROOVE AT TOP OF STRIATIONS.
2. REINFORCEMENT OF THE TRANSITION TOP IS NOT SHOWN FOR CLARITY.

SECTION 5 / 26

SCALE: $\frac{1}{2}$" = 1'–0"

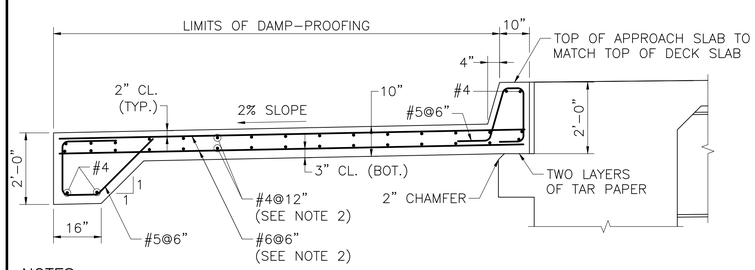

NOTES:

1. APPROACH SLAB TO BE 4000 PSI, 1½ IN, 565 CEMENT CONCRETE.
2. PLACE #6 LONGITUDINAL REINFORCEMENT BARS PARALLEL TO CENTERLINE OF CONSTRUCTION. PLACE #4 TRANSVERSE REINFORCEMENT BARS PARALLEL TO ABUTMENT.

APPROACH SLAB DETAILS

SCALE: $\frac{1}{2}$" = 1'–0"

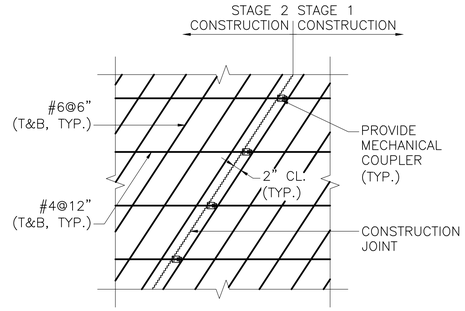

APPROACH SLAB CONSTRUCTION JOINT

SCALE: $\frac{3}{4}$" = 1'–0"

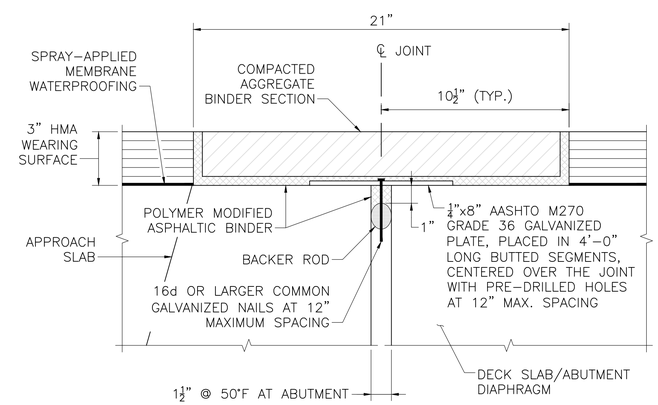

ASPHALTIC BRIDGE JOINT DETAIL

SCALE: 3" = 1'–0"

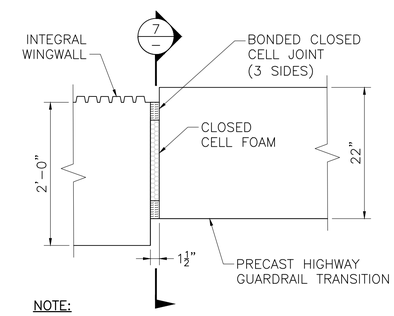

NOTE:

REINFORCEMENT NOT SHOWN FOR CLARITY.

JOINT DETAIL

SCALE: 1" = 1'–0"

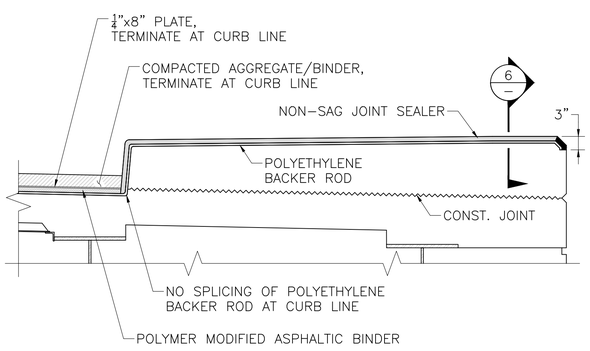

JOINT DETAIL AT SIDEWALK

SCALE: $\frac{3}{4}$" = 1'–0"

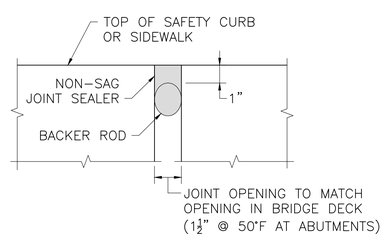

SECTION 6 / –

SCALE: 3" = 1'–0"

CONSTRUCTION SEQUENCE NOTES:

1. CENTER 19" WIDE STRIP OF ROOFING FELT OVER THE JOINT LOCATION.
2. PLACE WATERPROOFING MEMBRANE AND HMA WEARING SURFACE UNIFORMLY ACROSS THE DECK AND JOINT LOCATIONS.
3. SAW CUT AND REMOVE THE HMA WEARING SURFACE AND MEMBRANE WATERPROOFING TO THE LIMITS REQUIRED.
4. PLACE BACKER ROD, POLYMER MODIFIED BINDER AND STEEL PLATE SECURED IN PLACE WITH GALVANIZED NAILS.
5. COAT THE SURFACES OF THE BLOCK–OUT WITH THE POLYMER MODIFIED ASPHALTIC BINDER.
6. PLACE COMPACTED AGGREGATE/BINDER TO FILL ALL VOIDS AND OBTAIN A FINAL AND EVEN SURFACE WITH THE ADJACENT WEARING SURFACE.
7. IT IS NOT NECESSARY TO CONSTRUCT THE JOINT AT MEAN TEMPERATURE, HOWEVER, THE MANUFACTURER SHOULD BE CONSULTED FOR INSTALLATION GUIDELINES FOR EXTREME CLIMATE CONDITIONS.

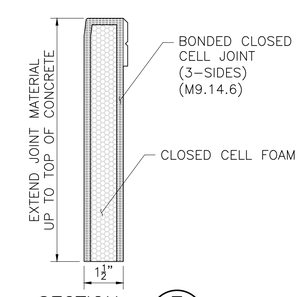

SECTION 7 / –

NOT TO SCALE

DATE	DESCRIPTION
9/10/2022	ISSUED FOR CONSTRUCTION

THIS SHEET IS APPROVED FOR CONSTRUCTION BY MASSDOT AUTHORIZED SIGNATORY: STATE BRIDGE ENGINEER

USE ONLY PRINTS OF LATEST DATE

605126_BR23-27 ABUTMENT DETAILS (W050151).DWG Plotted on 17-Sep-2022 11:00 PM
FINAL STRUCTURAL SUBMITTAL (SF) 19-AUGUST-2022

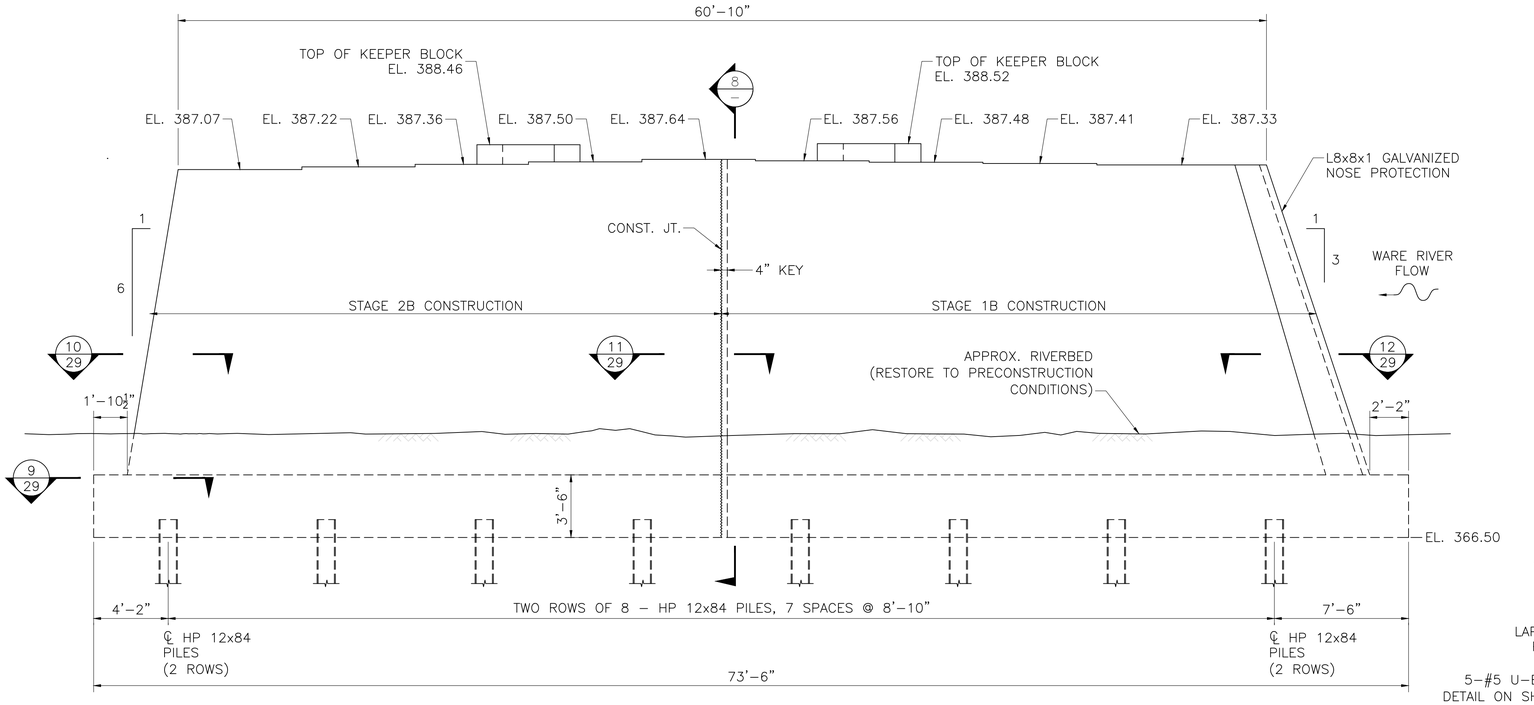

PIER ELEVATION (LOOKING UP STATION)

SCALE: ¼"=1'-0"

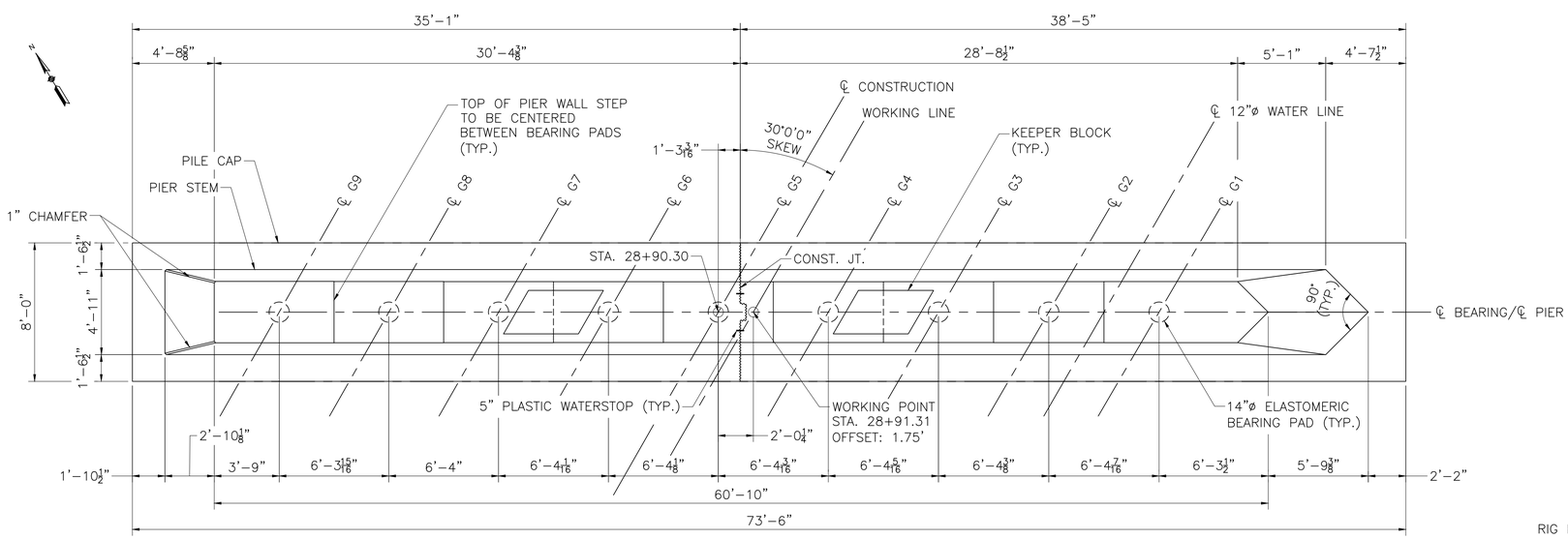

PIER PLAN VIEW

SCALE: ¼"=1'-0"

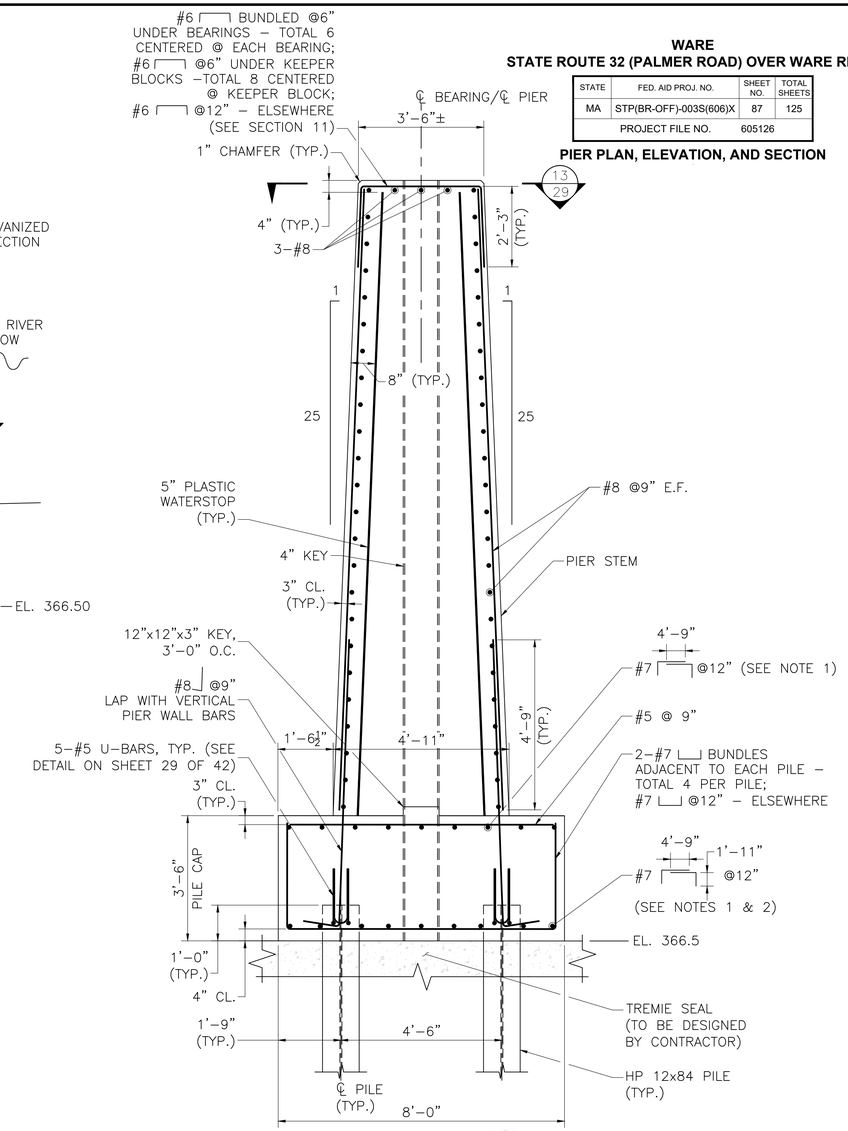

SECTION 8 –

SCALE: ½" = 1'-0"

WARE
STATE ROUTE 32 (PALMER ROAD) OVER WARE RIVER

STATE	FED. AID PROJ. NO.	SHEET NO.	TOTAL SHEETS
MA	STP(BR-OFF)-003S(606)X	87	125
PROJECT FILE NO. 605126			

PIER PLAN, ELEVATION, AND SECTION

NOTES:

1. BARS ARE TO BE SPLICED NORTH OF THE CONSTRUCTION JOINT.
2. SPACING TO BE ADJUSTED AROUND PILES TO AVOID CONFLICT.
3. ALL REINFORCEMENT BARS SHALL BE EPOXY COATED.

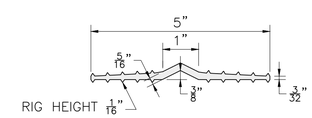

5" WATERSTOP

NOT TO SCALE

9/10/2022	ISSUED FOR CONSTRUCTION
DATE	DESCRIPTION
THIS SHEET IS APPROVED FOR CONSTRUCTION BY MASSDOT AUTHORIZED SIGNATORY:	STATE BRIDGE ENGINEER
USE ONLY PRINTS OF LATEST DATE	

605126_BR29-30 PIER PLAN ELEVATION (W05015).DWG Plotted on 17-Sep-2022 11:01 PM
FINAL STRUCTURAL SUBMITTAL (SF) 19-AUGUST-2022

STATE	FED. AID PROJ. NO.	SHEET NO.	TOTAL SHEETS
MA	STP(BR-OFF)-003S(606)X	88	125
PROJECT FILE NO.	605126		

PIER HP PILE PLAN AND DETAILS

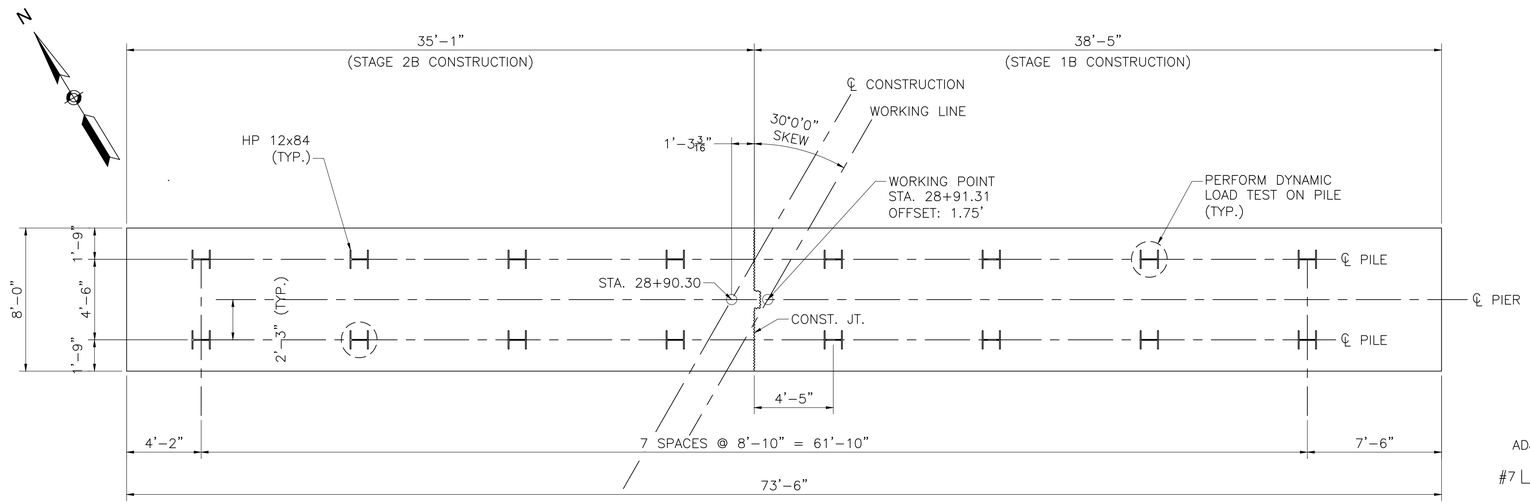

PIER FOUNDATION PLAN
SCALE: 1/4"=1'-0"

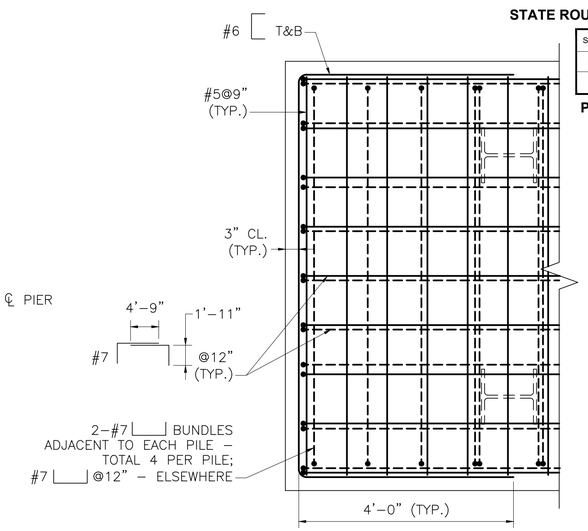

SECTION 9/28
SCALE: 3/4" = 1'-0"

NOTE:

SEE SECTION 6 ON SHEET 29 FOR ADDITIONAL INFORMATION NOT SHOWN.

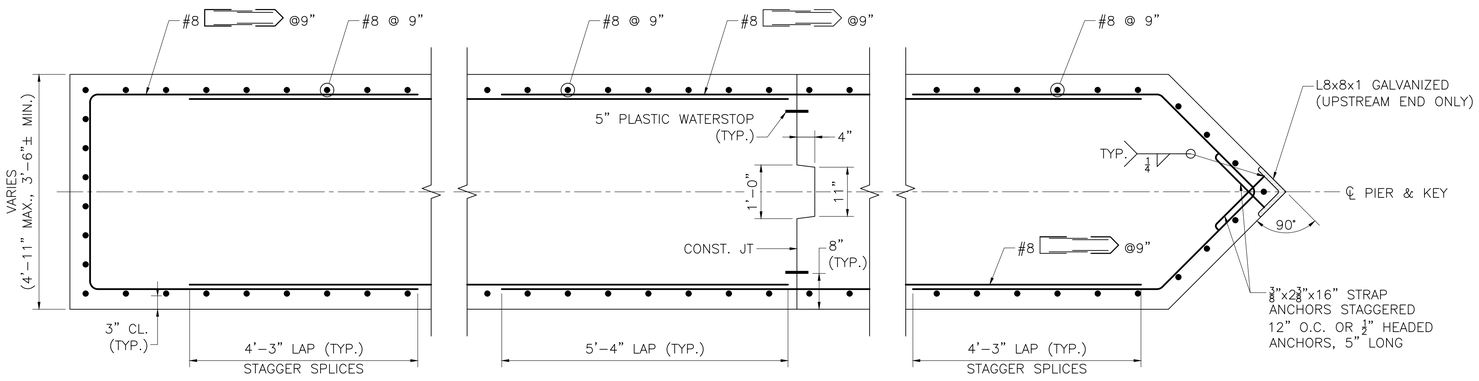

SECTION 10/28
SCALE: 3/4" = 1'-0"

SECTION 11/28
SCALE: 3/4" = 1'-0"

SECTION 12/28
SCALE: 3/4" = 1'-0"

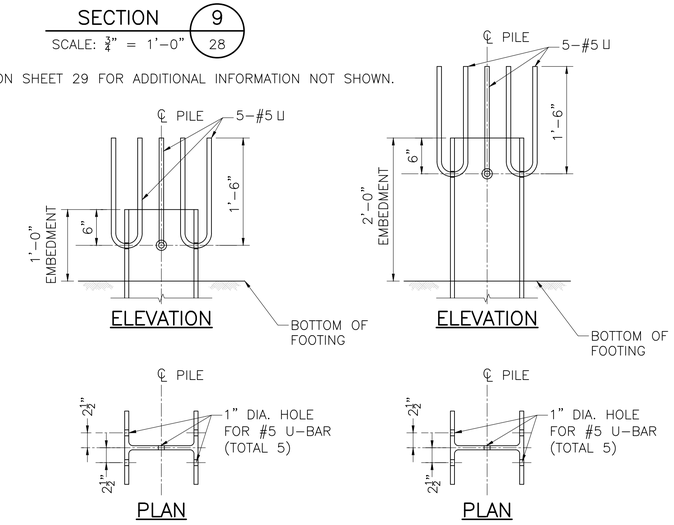

PIER PILES

ABUTMENT PILES

STEEL PILE ANCHOR DETAILS
SCALE: 1" = 1'-0"

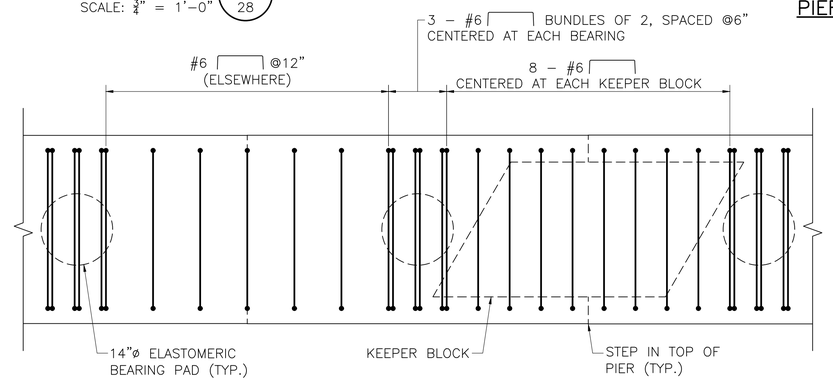

SECTION 13/28
SCALE: 3/4" = 1'-0"

PILE NOTES:

1. THE FACTORED AXIAL DESIGN LOAD PER PILE IS 327 KIPS AS PER AASHTO LRFD BRIDGE DESIGN SPECIFICATIONS STRENGTH I LOAD COMBINATION.
2. THE FACTORED STRUCTURAL RESISTANCE PER PILE IS 861 KIPS AND IS THE PRODUCT OF THE NOMINAL STRUCTURAL RESISTANCE OF 1230 KIPS AND A RESISTANCE FACTOR OF 0.7.
3. PILES SHALL BE DRIVEN TO BEDROCK WITH AN ESTIMATED TIP ELEVATION OF 325 FEET. HEAVY DUTY PILE SHOES SHALL BE INSTALLED ON THE TIPS OF ALL PILES. PREFABRICATED PILE SHOES MAY BE USED IF APPROVED BY THE ENGINEER.
4. ALL SPLICES SHALL HAVE COMPLETE PENETRATION BUTT WELDS. THERE SHALL BE NO SPLICES WITHIN THE TOP 20 FEET OF PILE. SPLICE WELDS SHALL BE 100% UT. SEE SHEET 23 FOR HP PILE SPLICE DETAILS.
5. DETERMINATION OF THE DRIVEN PILE RESISTANCE, PILE DRIVING CRITERIA AND PILE INTEGRITY SHALL BE PERFORMED USING DYNAMIC LOAD TESTING WITH A GEOTECHNICAL RESISTANCE FACTOR OF 0.65. DYNAMIC LOAD TEST SHALL BE PERFORMED ON TWO (2) PIER PILES AT THE LOCATIONS INDICATED ON THE PIER FOUNDATION PLAN. PILES SHALL BE INSTALLED TO ACHIEVE A FACTORED DRIVEN RESISTANCE EQUAL TO OR GREATER THAN THE FACTORED AXIAL DESIGN LOAD.
6. THE CONTRACTOR SHALL SUBMIT A PILE SCHEDULE, PILE INSTALLATION, AND PILE DRIVING/TESTING PLAN FOR REVIEW AND APPROVAL OF THE ENGINEER.
7. PILES SHALL CONFORM TO AASHTO M270 GRADE 50.

DATE	DESCRIPTION
9/10/2022	ISSUED FOR CONSTRUCTION

THIS SHEET IS APPROVED FOR CONSTRUCTION BY MASSDOT
AUTHORIZED SIGNATORY: STATE BRIDGE ENGINEER
USE ONLY PRINTS OF LATEST DATE

605126_BR29-30 PIER PLAN ELEVATION (W050151).DWG Plotted on 17-Sep-2022 11:01 PM
FINAL STRUCTURAL SUBMITTAL (SF) 19-AUGUST-2022

STATE	FED. AID PROJ. NO.	SHEET NO.	TOTAL SHEETS
MA	STP(BR-OFF)-003S(606)X	89	125
PROJECT FILE NO. 605126			

PIER DETAILS

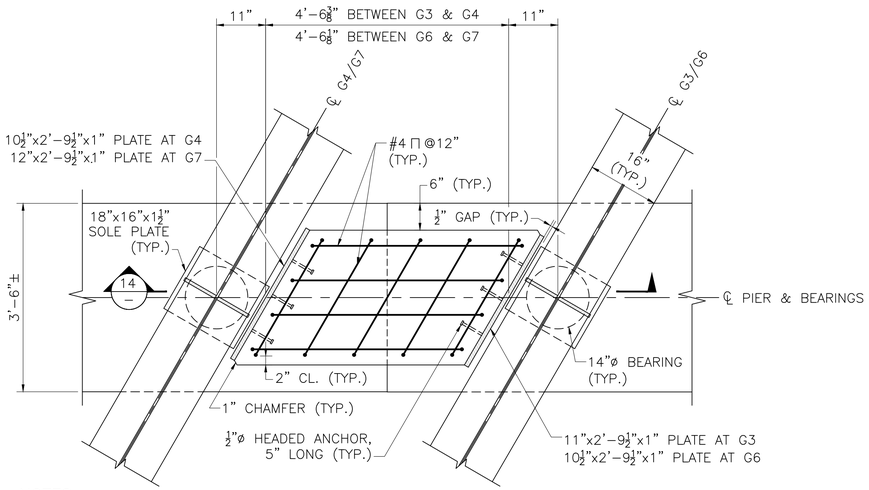

NOTES:

1. KEEPER BLOCKS SHALL BE CAST BEFORE GIRDERS ARE SET.
2. STEEL PLATES EMBEDED IN KEEPER BLOCK SHALL BE HOT-DIP GALVANIZED.

PLAN OF KEEPER BLOCK

SCALE: ¾" = 1'-0"

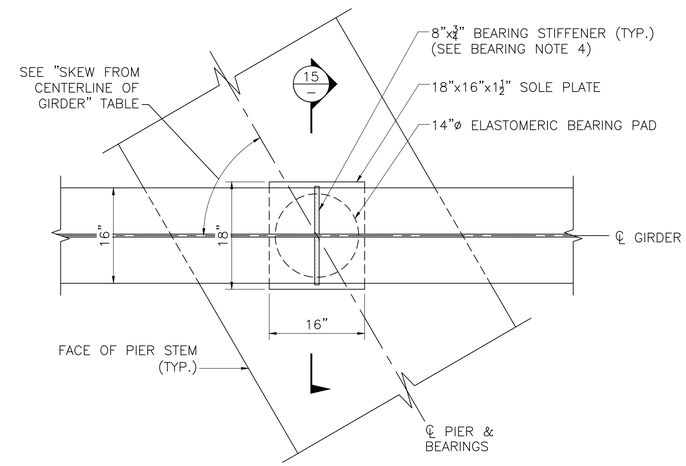

BEARING PLAN

SCALE: 1" = 1'-0"

GIRDER	SKEW
1	59° 39' 59"
2	59° 45' 34"
3	59° 51' 06"
4	59° 56' 36"
5	60° 02' 04"
6	60° 07' 30"
7	60° 12' 53"
8	60° 18' 16"
9	60° 23' 36"

SKEW FROM CENTERLINE OF GIRDER

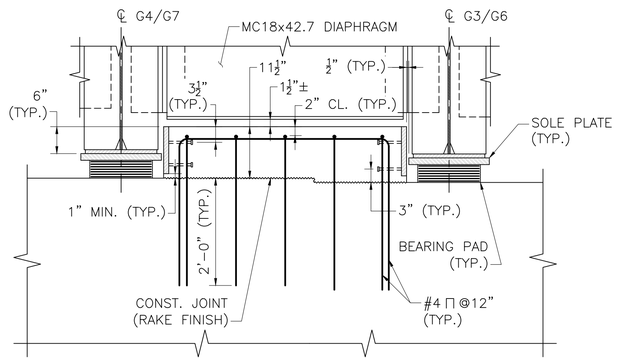

NOTES:

1. TOP OF KEEPER BLOCK SHALL BE TROWELED SMOOTH PARALLEL TO PROFILE GRADE.
2. PIER REINFORCEMENT HAS BEEN OMITTED FOR CLARITY.
3. PROVIDE RAKE FINISH IN AREA OF KEEPER BLOCK HAVING A 1/4" MINIMUM AMPLITUDE. CONCRETE SURFACES IN CONTACT WITH INTERMEDIATE KEEPER BLOCK SHALL BE POWER WASHED WITH WATER PRIOR TO CONCRETE PLACEMENT.

SECTION 14

SCALE: ¾" = 1'-0"

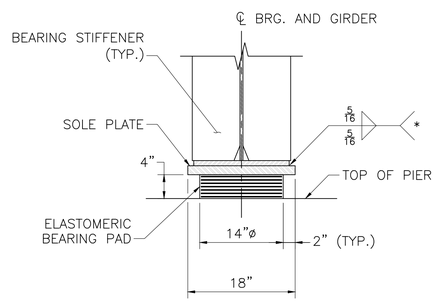

(*) – WELDS SHALL TERMINATE ¼" FROM EDGE OF PLATE.

SECTION 15

SCALE: 1" = 1'-0"

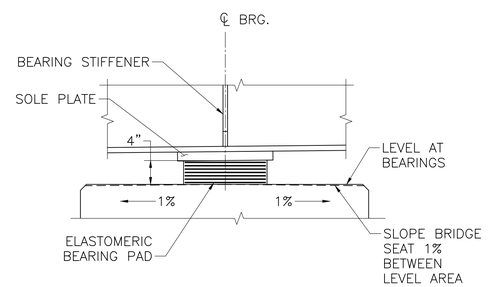

ELEVATION

SCALE: 1" = 1'-0"

BEARING NOTES:

1. STEEL SOLE PLATE SHALL CONFORM TO AASHTO 270 GRADE 36 AND SHALL BE HOT-DIP GALVANIZED.
2. CENTER THE ELASTOMERIC PAD UNDER SOLE PLATE DURING GIRDER ERECTION.
3. GIRDERS SHALL BE ERECTED WHEN THE AMBIENT TEMPERATURE IS BETWEEN 50°F AND 77°F. IF GIRDERS ARE ERECTED AT OTHER AMBIENT TEMPERATURES, THEY WILL HAVE TO BE JACKED AND THE ELASTOMERIC BEARING PADS BE RECENTERED WHEN THE TEMPERATURE RETURNS TO THAT RANGE.
4. BEARING STIFFENER ORIENTATION TO BE PERPENDICULAR TO THE CENTERLINE OF GIRDER.

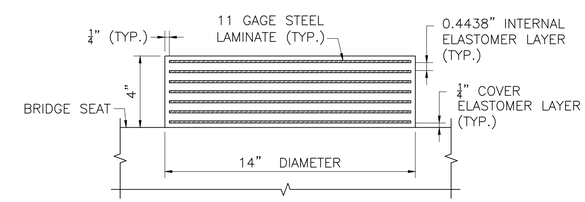

NOTES:

1. ELASTOMER SHALL HAVE A SHEAR MODULUS OF 0.160 KSI.
2. STEEL LAMINATES SHALL CONFORM TO ASTM A 1011 GRADE 36.
3. THE COMPRESSIVE DESIGN LOAD ON THE BEARING PAD IS 227.8 KIPS. THE COMPRESSIVE DESIGN STRESS IS THE RESULT OF DIVIDING THE COMPRESSIVE DESIGN LOAD BY THE AREA OF THE PAD AND IS EQUAL TO 1.48 KSI.
4. ELASTOMERIC BEARING PAD SHALL NOT BE VULCANIZED TO THE SOLE PLATE.

ELASTOMERIC BEARING PAD

SCALE: 3" = 1'-0"

DATE	DESCRIPTION
9/10/2022	ISSUED FOR CONSTRUCTION

THIS SHEET IS APPROVED FOR CONSTRUCTION BY MASSDOT
AUTHORIZED SIGNATORY: STATE BRIDGE ENGINEER
USE ONLY PRINTS OF LATEST DATE

605126_BR31 PIER DETAILS (W05015).DWG Plotted on 17-Sep-2022 11:03 PM
FINAL STRUCTURAL SUBMITTAL (SF) 19-AUGUST-2022

WARE
STATE ROUTE 32 (PALMER ROAD) OVER WARE RIVER

STATE	FED. AID PROJ. NO.	SHEET NO.	TOTAL SHEETS
MA	STP(BR-OFF)-003S(606)X	90	125
PROJECT FILE NO.	605126		

RIPRAP PLAN AND ELEVATION

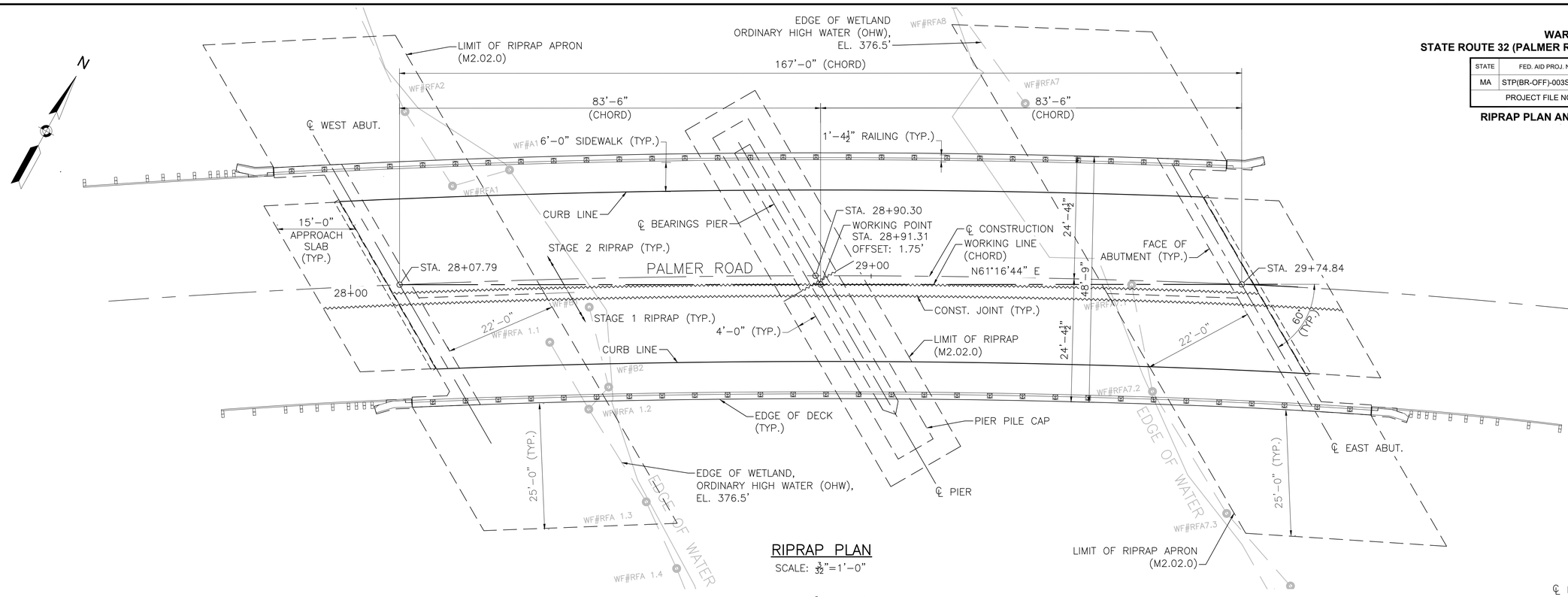

RIPRAP PLAN

SCALE: $\frac{3}{32}$"=1'-0"

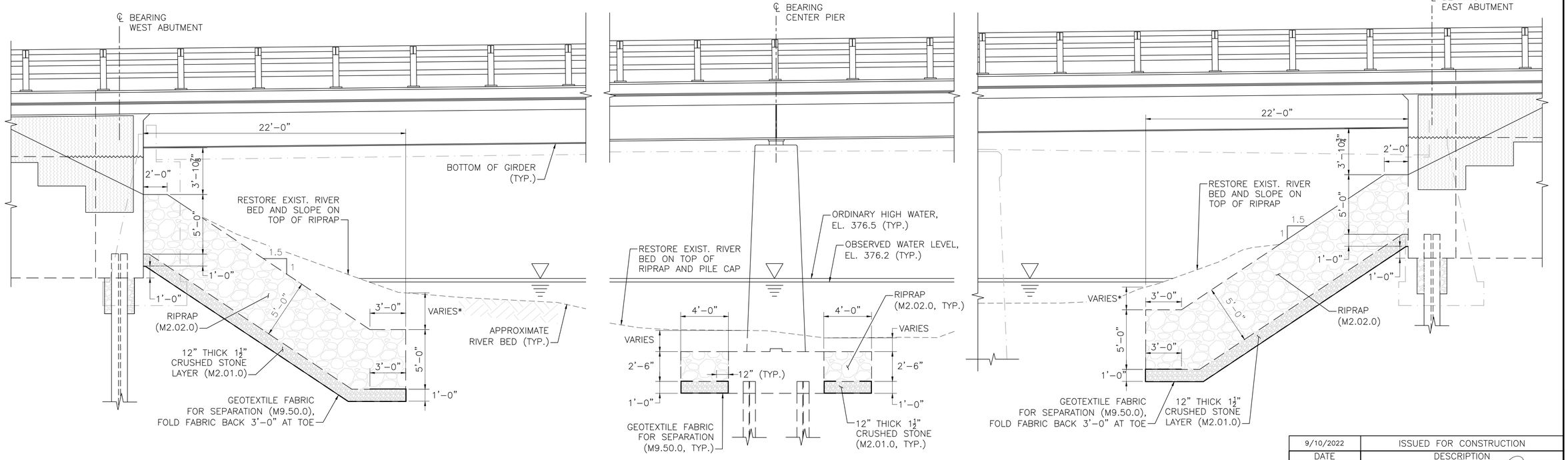

RIPRAP ELEVATION

SCALE: ¼"=1'-0"

* AVERAGE DEPTH OF RESTORED RIVER BED ALONG THE LENGTH OF THE RIPRAP SHALL BE 2.30'

DATE	DESCRIPTION
9/10/2022	ISSUED FOR CONSTRUCTION

THIS SHEET IS APPROVED FOR CONSTRUCTION BY MASSDOT AUTHORIZED SIGNATORY: STATE BRIDGE ENGINEER

USE ONLY PRINTS OF LATEST DATE

605126_BR32 RIPRAP PLAN & ELEVATION.DWG Plotted on 17-Sep-2022 11:04 PM
FINAL STRUCTURAL SUBMITTAL (SF) 19-AUGUST-2022

WARE
STATE ROUTE 32 (PALMER ROAD) OVER WARE RIVER

STATE	FED. AID PROJ. NO.	SHEET NO.	TOTAL SHEETS
MA	STP(BR-OFF)-003S(606)X	91	125
PROJECT FILE NO. 605126			

FRAMING PLAN

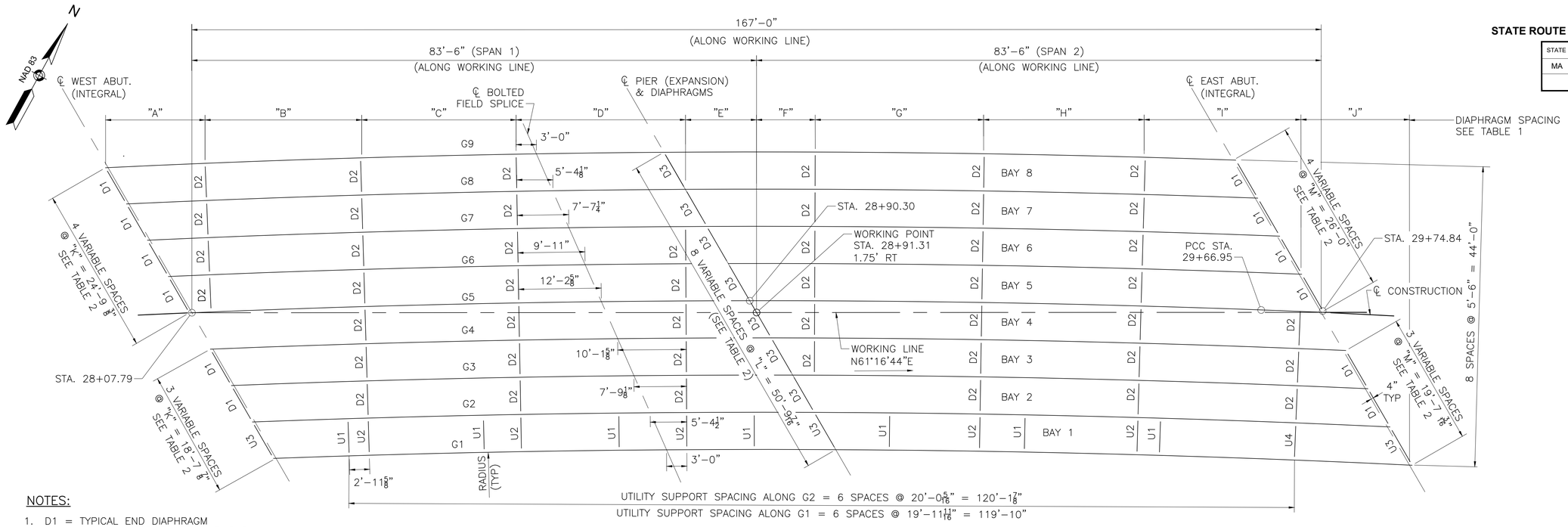

NOTES:

1. D1 = TYPICAL END DIAPHRAGM
   D2 = TYPICAL INTERMEDIATE DIAPHRAGM
   D3 = TYPICAL INTERMEDIATE DIAPHRAGM AT PIER
   U1 = TYPICAL UTILITY SUPPORT BETWEEN DIAPHRAGMS (SEE NOTE 5)
   U2 = TYPICAL DIAPHRAGMS AT UTILITY
   U3 = TYPICAL END AND PIER DIAPHRAGM AT UTILITY
   U4 = TYPICAL UTILITY SUPPORT AT DIAPHRAGM
2. SEE SHEETS 34 AND 35 FOR DIAPHRAGM AND UTILITY SUPPORT DETAILS.
3. THE MAIN LOAD CARRYING MEMBERS ARE G1, G2, G3, G4, G5, G6, G7, G8, G9, D1, D2, D3, U2, U3, AND U4 SHOWN IN THE FRAMING PLAN.
4. ALL STEEL SHALL CONFORM TO AASHTO M 270 GRADE 50.
5. THE LAYOUT OF THE UTILITY SUPPORTS U1 IS BASED UPON A PIPE LAYING LENGTH OF 20'-0" WITH THE UTILITY SUPPORT LOCATED ADJACENT TO THE PIPE BELL. IF A SHORTER PIPE LAYING LENGTH IS CHOSEN BY THE CONTRACTOR A REVISED UTILITY SUPPORT LAYOUT SHALL BE SUBMITTED FOR APPROVAL BY THE ENGINEER.

FRAMING PLAN

SCALE: 1/8"=1'-0"

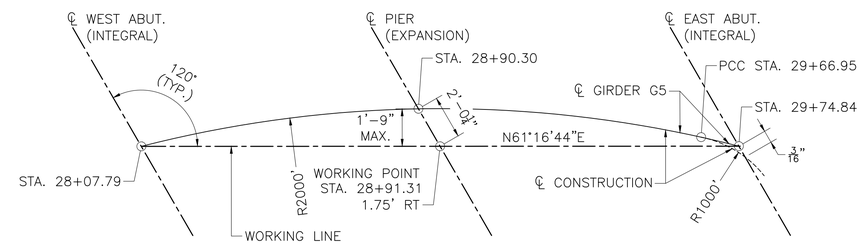

WORKING LINE LAYOUT

NOT TO SCALE

TABLE 1 – DIAPHRAGM SPACING ALONG GIRDER

GIRDER	RADIUS (FT)	DIAPHRAGM SPACING "A"	DIAPHRAGM SPACING "B"	DIAPHRAGM SPACING "C"	DIAPHRAGM SPACING "D"	DIAPHRAGM SPACING "E"	DIAPHRAGM SPACING "F"	DIAPHRAGM SPACING "G"	DIAPHRAGM SPACING "H"	DIAPHRAGM SPACING "I"	DIAPHRAGM SPACING "J"
1	1978.0	–	14'-2 1/8"	22'-6 1/16"	24'-5 1/2"	22'-0 5/16"	–	21'-3"	23'-3 9/16"	23'-3 9/16"	17'-5 3/16"
2	1983.5	–	17'-1 5/8"	22'-6 13/16"	24'-6 5/16"	18'-10 7/16"	–	24'-6 5/16"	23'-4 5/16"	23'-4 5/16"	13'-11 1/4"
3	1989.0	–	20'-1"	22'-7 9/16"	24'-7 1/8"	15'-8 5/8"	3'-2 3/8"	24'-7 1/8"	23'-5 1/8"	23'-5 1/8"	10'-5 3/8"
4	1994.5	–	23'-0 7/16"	22'-8 5/16"	24'-7 15/16"	12'-6 13/16"	6'-4 7/8"	24'-7 15/16"	23'-5 7/8"	23'-5 7/8"	6'-11 1/2"
5	2000.0	3'-2 3/4"	22'-9 1/16"	22'-9 1/16"	24'-8 3/4"	9'-5 1/16"	9'-7 5/16"	24'-8 3/4"	23'-6 5/8"	23'-6 5/8"	3'-5 3/4"
6	2005.5	6'-1 1/4"	22'-9 13/16"	22'-9 13/16"	24'-9 9/16"	6'-3 3/8"	12'-9 5/8"	24'-9 9/16"	23'-7 7/16"	23'-7 7/16"	–
7	2011.0	8'-11 7/8"	22'-10 9/16"	22'-10 9/16"	24'-10 3/8"	3'-1 5/8"	16'-0"	24'-10 3/8"	23'-8 3/16"	20'-2 1/2"	–
8	2016.5	11'-10 3/8"	22'-11 5/16"	22'-11 5/16"	24'-11 1/4"	–	19'-2 1/4"	24'-11 3/16"	23'-9"	16'-9 5/8"	–
9	2022.0	14'-8 7/8"	23'-0 1/16"	23'-0 1/16"	21'-10 7/16"	–	22'-4 1/2"	25'-0"	23'-9 3/4"	13'-4 13/16"	–

TABLE 2 – GIRDER SPACING AT ABUTMENTS AND PIER

BAY	WEST ABUTMENT SPACING "K"	PIER SPACING "L"	EAST ABUTMENT SPACING "M"
1	6'-2 11/16"	6'-4 7/16"	6'-6 1/2"
2	6'-2 5/8"	6'-4 3/8"	6'-6 3/8"
3	6'-2 9/16"	6'-4 5/16"	6'-6 5/16"
4	6'-2 1/2"	6'-4 3/16"	6'-6 3/16"
5	6'-2 7/16"	6'-4 1/8"	6'-6 1/8"
6	6'-2 3/8"	6'-4 1/16"	6'-6 1/16"
7	6'-2 5/16"	6'-4"	6'-5 15/16"
8	6'-2 1/4"	6'-3 15/16"	6'-5 7/8"

DATE	DESCRIPTION
9/10/2022	ISSUED FOR CONSTRUCTION

THIS SHEET IS APPROVED FOR CONSTRUCTION BY MASSDOT
AUTHORIZED SIGNATORY: STATE BRIDGE ENGINEER
USE ONLY PRINTS OF LATEST DATE

605126_BR33 FRAMING PLAN (W05015).DWG Plotted on 14-Oct-2022 3:35 PM
FINAL STRUCTURAL SUBMITTAL (SF) 19-AUGUST-2022

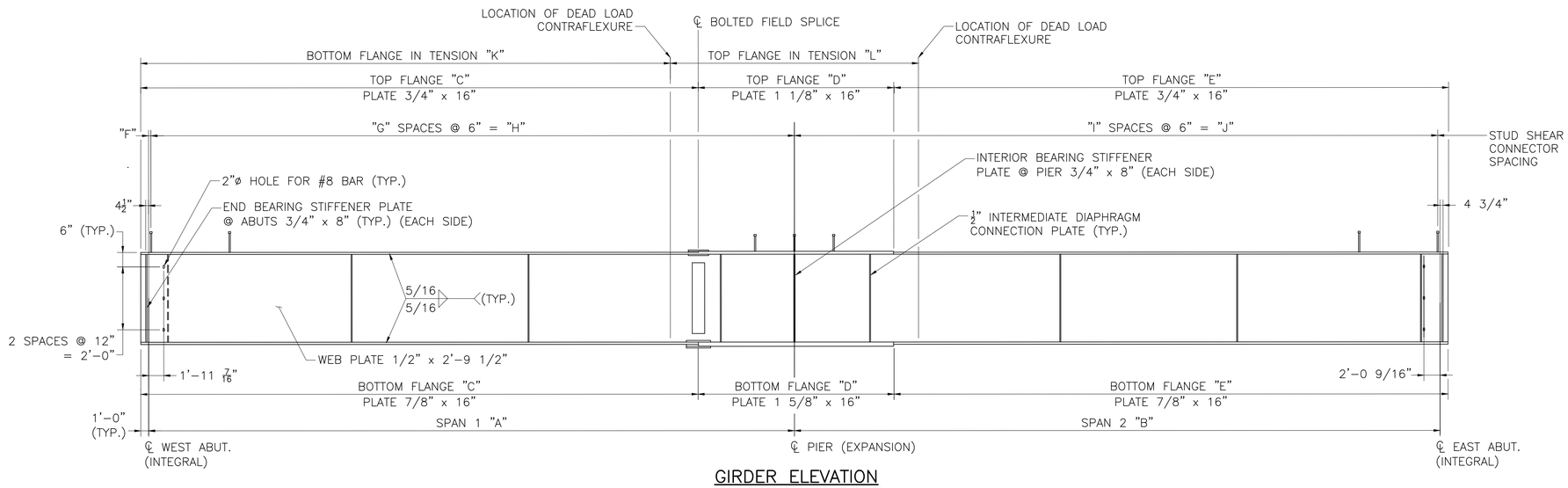

GIRDER ELEVATION

G5 SHOWN (OTHERS SIMILAR)

NOT TO SCALE

GIRDER	SPAN 1 "A"	SPAN 2 "B"	TOP/BOTTOM FLANGE "C"	TOP/BOTTOM FLANGE "D"	TOP/BOTTOM FLANGE "E"	STUD SHEAR DIM. "F"	STUD SHEAR SPACES "G"	STUD SHEAR DIM. "H"	STUD SHEAR SPACES "I"	STUD SHEAR DIM. "J"	BOTTOM FLANGE IN TENSION "K"	TOP FLANGE IN TENSION "L"
1	82'-9 1/2"	84'-10 1/2"	58'-9 3/16"	43'-3 5/16"	67'-7 1/2"	3 1/2"	165	82'-6"	169	84'-6"	58'-2 3/16"	48'-4 9/16"
2	82'-8 11/16"	84'-9 7/16"	59'-5 11/16"	43'-4 3/4"	66'-7 11/16"	2 11/16"	165	82'-6"	169	84'-6"	58'-6 5/8"	48'-0 1/2"
3	82'-7 13/16"	84'-8 3/8"	60'-2 1/8"	43'-6 3/16"	65'-7 7/8"	1 13/16"	165	82'-6"	169	84'-6"	58'-6 1/4"	47'-11 3/8"
4	82'-7"	84'-7 5/16"	60'-10 9/16"	43'-7 5/8"	64'-8 1/8"	1"	165	82'-6"	169	84'-6"	58'-2 3/4"	48'-2 3/16"
5	82'-6 3/16"	84'-6 5/16"	61'-7"	43'-9 1/16"	63'-8 7/16"	0 3/16"	165	82'-6"	169	84'-6"	58'-4 1/16"	48'-1 11/16"
6	82'-5 5/16"	84'-5 5/16"	62'-3 3/8"	43'-10 1/2"	62'-8 3/4"	5 5/16"	164	82'-0"	168	84'-0"	58'-5 1/4"	47'-8 5/8"
7	82'-4 1/2"	84'-4 5/16"	62'-11 13/16"	43'-11 15/16"	61'-9 1/16"	4 1/2"	164	82'-0"	168	84'-0"	58'-7"	47'-8 1/4"
8	82'-3 3/4"	84'-3 5/16"	63'-8 1/4"	44'-1 3/8"	60'-9 7/16"	3 3/4"	164	82'-0"	168	84'-0"	58'-1 7/16"	47'-8 1/4"
9	82'-2 15/16"	84'-2 5/16"	64'-4 9/16"	44'-2 7/8"	59'-9 13/16"	2 15/16"	164	82'-0"	168	84'-0"	57'-11 3/8"	48'-2 1/16"

WARE
STATE ROUTE 32 (PALMER ROAD) OVER WARE RIVER

STATE	FED. AID PROJ. NO.	SHEET NO.	TOTAL SHEETS
MA	STP(BR-OFF)-003S(606)X	92	125
PROJECT FILE NO. 605126			

STEEL DETAILS
SHEET 1 OF 4

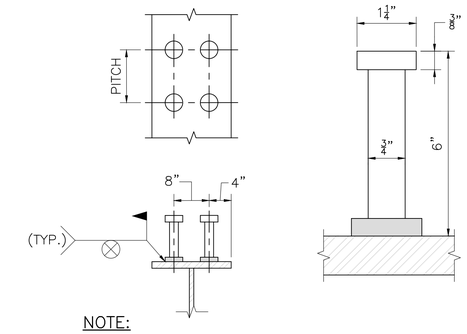

NOTE:

7/8"ø STUDS MAY BE SUBSTITUTED FOR 3/4"ø STUDS BY ADJUSTING THE PITCH TO PROVIDE AN EQUIVALENT CROSS-SECTIONAL AREA PER FOOT.

STUD SHEAR CONNECTORS

NOT TO SCALE

NOTES:

1. ALL INTERMEDIATE DIAPHRAGM CONNECTION PLATES SHALL BE PERPENDICULAR TO THE WEB AND TO THE GIRDER FLANGES.
2. ALL BEARING STIFFENERS SHALL BE PERPENDICULAR TO THE WEB AND PLUMB AFTER APPLICATION OF FULL DEAD LOAD.
3. ENDS OF GIRDERS SHALL BE FABRICATED SO THAT UNDER FULL DEAD LOAD THE ENDS WILL BE PLUMB.
4. THE LOCATION OF WELDED SHOP SPLICES SHALL BE APPROVED BY THE ENGINEER. WEB SPLICES SHALL BE LOCATED A MINIMUM OF 9 INCHES FROM WELDED FLANGE SPLICES AND A MINIMUM OF 6 INCHES FROM CONNECTION PLATES. THE SHOP DRAWINGS SHALL INDICATE THE METHOD AND SEQUENCE TO BE FOLLOWED IN WELDING OF GIRDER COMPONENTS.
5. ALL STRUCTURAL STEEL WELDING AND FABRICATION SHALL BE PERFORMED IN CONFORMANCE WITH THE LATEST AASHTO/AWS D1.5 BRIDGE WELDING CODE AND THE MASSDOT STANDARD SPECIFICATIONS.
6. UNLESS OTHERWISE NOTED, ALL BOLTED CONNECTIONS SHALL BE SLIP-CRITICAL (CLASS B FAYING SURFACE) MADE WITH 7/8" DIAMETER ASTM F3125 GRADE A325 HIGH STRENGTH BOLTS WITH THE THREADS EXCLUDED FROM THE SHEAR PLANES IN 15/16" DIAMETER STANDARD HOLES. ALL BOLTS, NUTS, AND WASHERS SHALL CONFORM TO THE REQUIREMENTS OF ASTM F3125 TYPE 1 (GALVANIZED).
7. SHOP OR FIELD WELDING ATTACHMENTS TO, OR PLACEMENT OF HOLES IN ANY SURFACE OF ANY STRUCTURAL STEEL ELEMENTS THAT IS NOT SHOWN OR CALLED FOR IN THE CONSTRUCTION PLANS FOR CONSTRUCTION PURPOSES IS NOT PERMITTED. SHOP OR FIELD ATTACHMENTS OF THE TOP OR BOTTOM GIRDER FLANGES FOR CONSTRUCTION MUST BE APPROVED BY THE ENGINEER.
8. SCREED RAIL SUPPORTS REQUIRED FOR CONCRETE DECK PLACEMENT SHALL BE LOCATED AT THE CENTERLINE OF GIRDERS.
9. ALL DIMENSIONS ARE ALONG THE CENTERLINE OF GIRDER.
10. ALL SURFACES OF PLATE GIRDERS, CONNECTION PLATES, STIFFENERS, GUSSET PLATES, SPLICE PLATES, DIAPHRAGMS, AND UTILITY SUPPORTS SHALL BE METALIZED (M7.15.0) FOR ZONE 2 CONDITIONS AND SEALED PER SPECIAL PROVISION 995.01 AFTER FABRICATION IS COMPLETE. ANY DAMAGED FINISH SURFACE SHALL BE SHOP OR FIELD REPAIRED AS DIRECTED BY THE ENGINEER. ALL FAYING SURFACES FOR DIAPHRAGM TO GIRDER CONNECTIONS SHALL BE CLASS B.

DATE	DESCRIPTION
9/10/2022	ISSUED FOR CONSTRUCTION

THIS SHEET IS APPROVED FOR CONSTRUCTION BY MASSDOT
AUTHORIZED SIGNATORY: STATE BRIDGE ENGINEER
USE ONLY PRINTS OF LATEST DATE

605126_BR34 STEEL DETAILS 1 OF 4 (W05015).DWG Plotted on 18-Oct-2022 2:14 PM
FINAL STRUCTURAL SUBMITTAL (SF) 19-AUGUST-2022

STATE	FED. AID PROJ. NO.	SHEET NO.	TOTAL SHEETS
MA	STP(BR-OFF)-003S(606)X	93	125
PROJECT FILE NO.	605126		

STEEL DETAILS
SHEET 2 OF 4

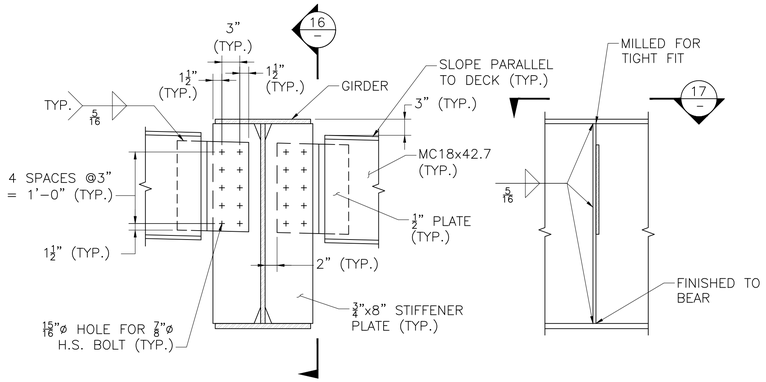

ELEVATION VIEW

SECTION 16

NOTE:

SEE CLIP DETAIL ON SHEET 36.

END DIAPHRAGM DETAIL (D1)

SCALE: 1" = 1'-0"

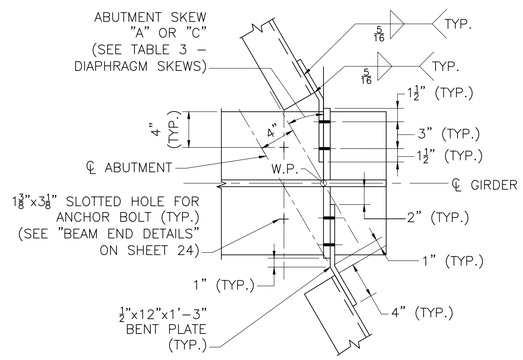

SECTION 17

SCALE: 1½" = 1'-0"

(EAST ABUTMENT SHOWN – WEST ABUTMENT SIMILAR)

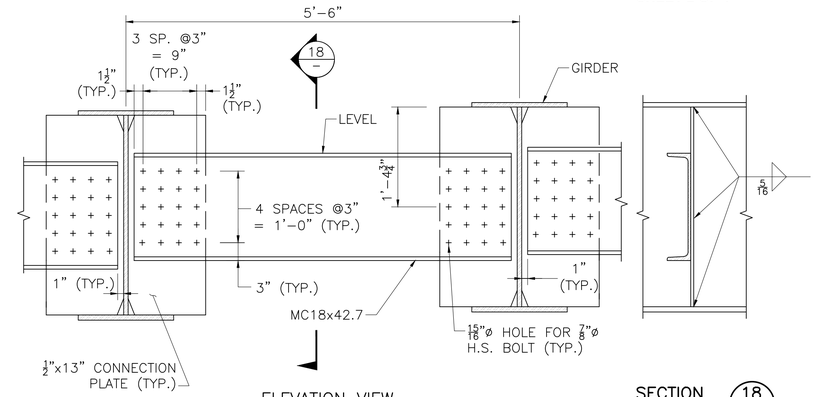

ELEVATION VIEW

SECTION 18

NOTES:

1. SEE CLIP DETAILS ON SHEET 36.
2. SEE NOTE 6 ON SHEET 33 FOR ADDITIONAL BOLT AND FAYING SURFACE REQUIREMENTS.

INTERMEDIATE DIAPHRAGM DETAIL (D2)

SCALE: 1" = 1'-0"

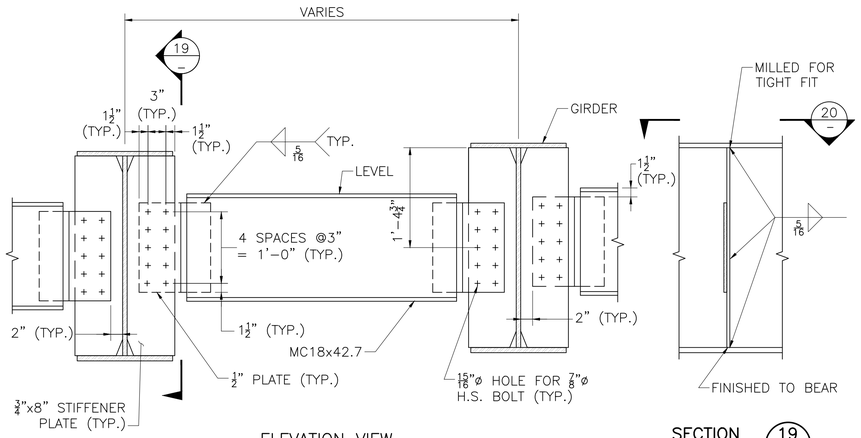

ELEVATION VIEW

SECTION 19

NOTES:

1. SEE CLIP DETAILS ON SHEET 36.
2. SEE NOTE 6 ON SHEET 33 FOR ADDITIONAL BOLT AND FAYING SURFACE REQUIREMENTS

INTERMEDIATE DIAPHRAGM AT PIER DETAIL (D3)

SCALE: 1" = 1'-0"

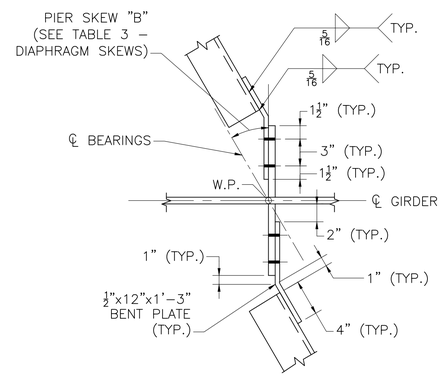

SECTION 20

SCALE: 1½" = 1'-0"

TABLE 3 – DIAPHRAGM SKEWS			
GIRDER NO.	WEST ABUTMENT SKEW "A"	PIER SKEW "B"	EAST ABUTMENT SKEW "C"
1	27° 56' 07"	30° 20' 01"	32° 47' 31"
2	27° 51' 04"	30° 14' 26"	32° 41' 23"
3	27° 46' 03"	30° 08' 54"	30° 08' 54"
4	27° 41' 04"	30° 03' 24"	32° 29' 14"
5	27° 36' 06"	29° 57' 56"	32° 23' 13"
6	27° 31' 10"	29° 52' 30"	32° 17' 14"
7	27° 26' 17"	29° 47' 06"	32° 11' 18"
8	27° 21' 25"	29° 41' 44"	32° 05' 24"
9	27° 16' 34"	29° 36' 24"	31° 59' 33"

DATE	DESCRIPTION
9/10/2022	ISSUED FOR CONSTRUCTION

THIS SHEET IS APPROVED FOR CONSTRUCTION BY MASSDOT AUTHORIZED SIGNATORY: STATE BRIDGE ENGINEER

USE ONLY PRINTS OF LATEST DATE

605126_BR35 STEEL DETAILS 2 OF 4 (W05015).DWG Plotted on 14-Oct-2022 3:36 PM
FINAL STRUCTURAL SUBMITTAL (SF) 19-AUGUST-2022

CAMBER TABLE (IN)

GIRDER NO.		℄ WEST ABUT.	SPAN NO. 1									℄ BRGS PIER	SPAN NO. 2									℄ EAST ABUT.
			0.1 L	0.2 L	0.3 L	0.4 L	0.5 L	0.6 L	0.7 L	0.8 L	0.9 L		0.1 L	0.2 L	0.3 L	0.4 L	0.5 L	0.6 L	0.7 L	0.8 L	0.9 L	
1	STEEL DL DEFLECTION	0.00	0.10	0.19	0.24	0.26	0.24	0.20	0.14	0.07	0.02	0.00	0.03	0.10	0.17	0.24	0.29	0.31	0.28	0.21	0.12	0.00
	CONC. DL DEFLECTION	0.00	0.41	0.75	0.98	1.05	0.99	0.80	0.55	0.27	0.07	0.00	0.12	0.39	0.70	1.01	1.20	1.27	1.17	0.89	0.49	0.00
	S.D.L DEFLECTION	0.00	0.18	0.32	0.42	0.45	0.42	0.35	0.24	0.12	0.03	0.00	0.06	0.17	0.31	0.44	0.52	0.54	0.49	0.38	0.20	0.00
	VERT. CURVE CAMBER	0.00	0.00	0.00	0.00	0.00	0.00	0.00	0.00	0.00	0.00	0.00	0.00	0.00	0.00	0.00	0.00	0.00	0.00	0.00	0.00	0.00
	ADDITIONAL CAMBER	0.00	0.20	0.37	0.48	0.52	0.49	0.40	0.27	0.14	0.04	0.00	0.05	0.16	0.30	0.42	0.50	0.53	0.48	0.37	0.20	0.00
	TOTAL CAMBER	0.00	0.89	1.63	2.11	2.28	2.14	1.74	1.20	0.59	0.16	0.00	0.26	0.82	1.48	2.11	2.51	2.65	2.42	1.85	1.01	0.00
2, 9	STEEL DL DEFLECTION	0.00	0.09	0.16	0.20	0.22	0.21	0.17	0.11	0.06	0.01	0.00	0.03	0.09	0.15	0.22	0.26	0.28	0.25	0.19	0.11	0.00
	CONC. DL DEFLECTION	0.00	0.41	0.75	0.97	1.05	0.98	0.79	0.55	0.28	0.08	0.00	0.11	0.37	0.67	0.97	1.18	1.25	1.15	0.88	0.49	0.00
	S.D.L DEFLECTION	0.00	0.18	0.32	0.42	0.46	0.43	0.36	0.25	0.13	0.04	0.00	0.04	0.14	0.27	0.38	0.47	0.50	0.46	0.35	0.20	0.00
	VERT. CURVE CAMBER	0.00	0.00	0.00	0.00	0.00	0.00	0.00	0.00	0.00	0.00	0.00	0.00	0.00	0.00	0.00	0.00	0.00	0.00	0.00	0.00	0.00
	ADDITIONAL CAMBER	0.00	0.20	0.37	0.48	0.51	0.48	0.39	0.27	0.13	0.03	0.00	0.05	0.16	0.29	0.42	0.50	0.53	0.48	0.37	0.20	0.00
	TOTAL CAMBER	0.00	0.87	1.59	2.06	2.23	2.10	1.71	1.18	0.59	0.16	0.00	0.23	0.77	1.39	1.98	2.42	2.55	2.34	1.80	0.99	0.00
3–8	STEEL DL DEFLECTION	0.00	0.09	0.16	0.20	0.22	0.20	0.17	0.11	0.06	0.01	0.00	0.03	0.08	0.15	0.21	0.25	0.27	0.24	0.19	0.10	0.00
	CONC. DL DEFLECTION	0.00	0.40	0.73	0.94	1.02	0.96	0.78	0.52	0.28	0.07	0.00	0.12	0.35	0.66	0.94	1.14	1.21	1.11	0.85	0.47	0.00
	S.D.L DEFLECTION	0.00	0.15	0.28	0.36	0.39	0.37	0.30	0.21	0.11	0.03	0.00	0.04	0.13	0.24	0.34	0.41	0.44	0.40	0.31	0.17	0.00
	VERT. CURVE CAMBER	0.00	0.00	0.00	0.00	0.00	0.00	0.00	0.00	0.00	0.00	0.00	0.00	0.00	0.00	0.00	0.00	0.00	0.00	0.00	0.00	0.00
	ADDITIONAL CAMBER	0.00	0.20	0.37	0.48	0.51	0.48	0.40	0.27	0.14	0.03	0.00	0.06	0.16	0.30	0.42	0.50	0.53	0.48	0.37	0.20	0.00
	TOTAL CAMBER	0.00	0.84	1.53	1.98	2.14	2.01	1.64	1.11	0.59	0.15	0.00	0.24	0.73	1.34	1.91	2.30	2.44	2.24	1.71	0.93	0.00

CAMBER NOTES:

1. THE CAMBER TABLE IS CALCULATED BASED ON THE PROPOSED DECK PLACEMENT SEQUENCE AND THE CONSTRUCTION STAGING SEQUENCE. A CONSTRUCTION STAGING OR DECK POURING SEQUENCE DIFFERENT THAN THAT SHOWN ON SHEET 39 WILL REQUIRE THE APPROVAL OF THE ENGINEER.
2. THE EMPTY SELF WEIGHT OF THE WATER MAIN AND STEEL FRAMING ARE ASSUMED TO BE ERECTED ONTO THE STAGE 1B CONSTRUCTION GIRDERS PRIOR TO DECK CASTING. THE WEIGHT OF THE WATER WITHIN THE WATER MAIN IS ASSUMED TO BE APPLIED TO THE STRUCTURE AFTER STAGE 1B DECK CASTING AND BEFORE STAGE 2A CONSTRUCTION DECK CASTING. THE CONTRACTOR TO COORDINATE WITH THE ENGINEER IF THE UTILITY AND/OR THEIR CONTENTS ARE TO BE ERECTED IN A DIFFERENT ORDER FOR CONSTRUCTION PURPOSES.
3. POINTS OF DEFLECTION AND CAMBER GIVEN ARE LOCATED AT EQUAL SPACES ALONG EACH GIRDER CENTERLINE. DUE TO THE CURVATURE OF THE BRIDGE THE SPACES ARE DIFFERENT FOR EACH GIRDER.

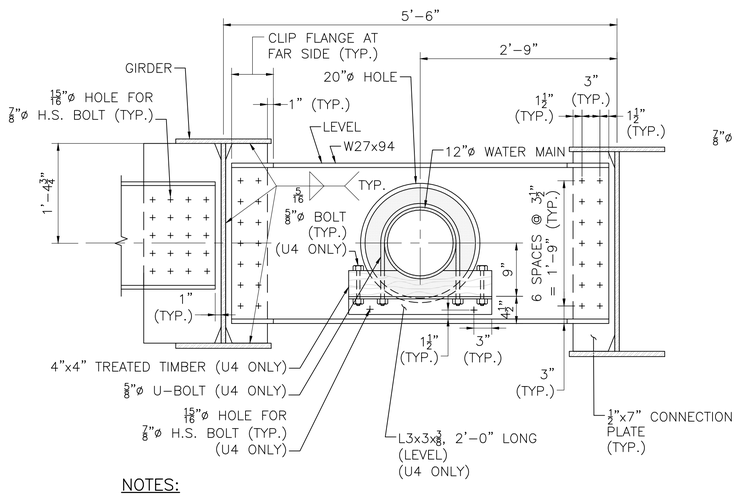

NOTES:

1. SEE DIAPHRAGM CONNECTION PLATE CLIP DETAILS ON SHEET 36.
2. SEE NOTE 6 ON SHEET 33 FOR ADDITIONAL BOLT AND FAYING SURFACE REQUIREMENTS.

INTERMEDIATE DIAPHRAGM U2 AT UTILITY LOCATIONS & U4 AT UTILITY SUPPORT

SCALE: 1" = 1'–0"

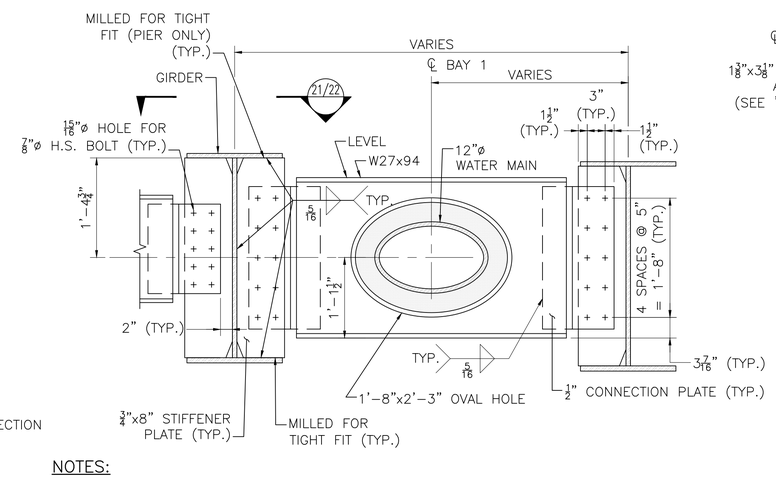

NOTES:

1. SEE DIAPHRAGM CONNECTION PLATE CLIP DETAILS ON SHEET 36.
2. DIAPHRAGM IS SHOWN AS A FOLD OUT ALONG FACE OF STIFFENER PLATES AND DIAPHRAGMS.
3. SEE NOTE 6 ON SHEET 33 FOR ADDITIONAL BOLT AND FAYING SURFACE REQUIREMENTS

END/PIER DIAPHRAGM DETAIL U3 AT UTILITY LOCATION

(EAST ABUTMENT LOCATION SHOWN – OTHERS SIMILAR)

SCALE: 1" = 1'–0"

WARE
STATE ROUTE 32 (PALMER ROAD) OVER WARE RIVER

STATE	FED. AID PROJ. NO.	SHEET NO.	TOTAL SHEETS
MA	STP(BR-OFF)-003S(606)X	94	125
PROJECT FILE NO. 605126			

STEEL DETAILS
SHEET 3 OF 4

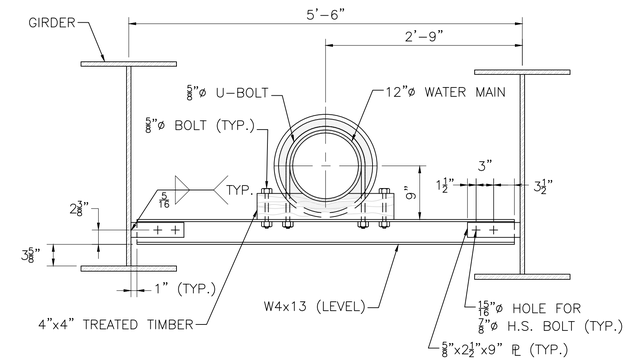

UTILITY SUPPORT U1 DETAIL BETWEEN DIAPHRAGMS

SCALE: 1" = 1'–0"

UTILITY SUPPORT NOTES:

1. HOLES IN THE STEEL FRAMING FOR UTILITY CONNECTIONS SHALL BE DRILLED STANDARD HOLES. MAINTAIN MINIMUM EDGE DISTANCES PER AASHTO LRFD STANDARDS.
2. FLAT AND LOCK WASHERS SHALL BE USED FOR ALL UTILITY TO STEEL FRAMING CONNECTIONS.
3. MAINTAIN THE MINIMUM 20 INCH DIAMETER CLEAR OPENING FOR THE WATER MAIN PASSAGE WITHIN THE SKEWED U3 DIAPHRAGMS.

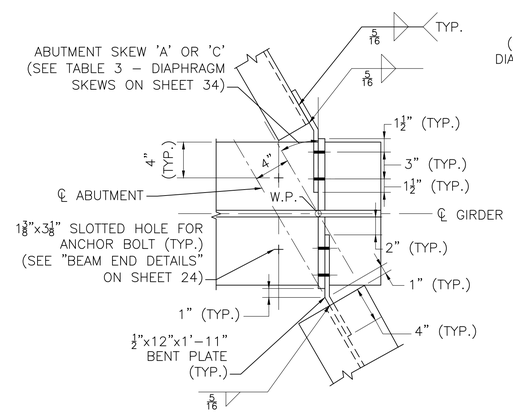

SECTION 21
SCALE: 1½" = 1'–0"

(EAST ABUTMENT SHOWN – WEST ABUTMENT SIMILAR)

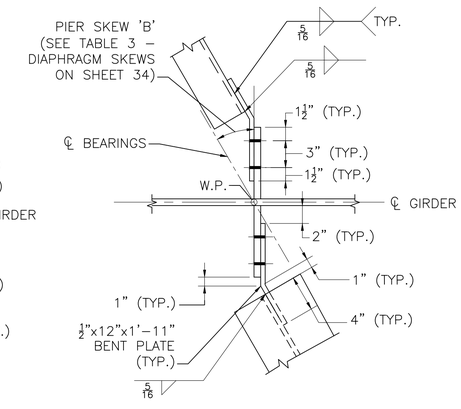

SECTION 22
SCALE: 1½" = 1'–0"

(PIER)

9/10/2022	ISSUED FOR CONSTRUCTION
DATE	DESCRIPTION

THIS SHEET IS APPROVED FOR CONSTRUCTION BY MASSDOT
AUTHORIZED SIGNATORY: STATE BRIDGE ENGINEER
USE ONLY PRINTS OF LATEST DATE

605126_BR36 STEEL DETAILS 3 OF 4 (W05015.DWG Plotted on 14-Oct-2022 3:36 PM
FINAL STRUCTURAL SUBMITTAL (SF) 19-AUGUST-2022

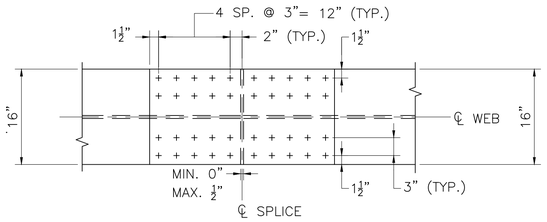

TOP FLANGE

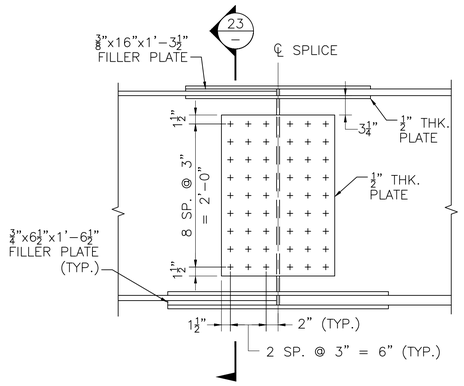

ELEVATION

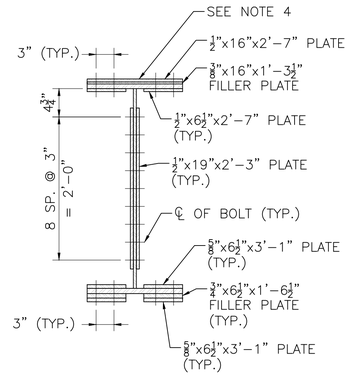

SECTION 23

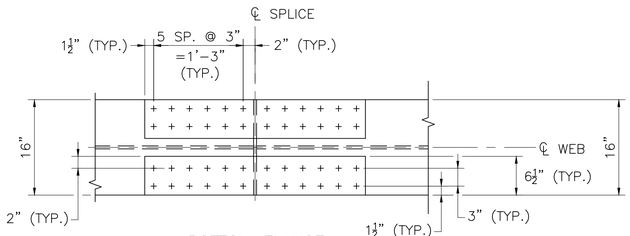

BOTTOM FLANGE

NOTES:

1. BOLTED FIELD SPLICES SHALL BE CONSIDERED SLIP CRITICAL CONNECTIONS WITH CLASS B FAYING SURFACES.
2. + DENOTES 7/8"ø ASTM F3125 GRADE A325 HIGH STRENGTH BOLT IN 15/16"ø HOLE WITH THREADS EXCLUDED FROM THE SHEAR PLANE.
3. THICKNESS DIFFERENCES OF 1/16" OR LESS DO NOT REQUIRE FILLER PLATES. FILLER PLATES SHALL CONFORM TO AASHTO M 270 GRADE 50 OR ASTM A606.
4. ONE ROW OF STUD SHEAR CONNECTORS SHALL BE PLACED ALONG THE CENTERLINE OF THE TOP FLANGE SPLICE PLATE AT HALF THE SPACING SPECIFIED ON SHEET 33.

BOLTED FIELD SPLICE DETAILS

SCALE: 1" = 1'-0"

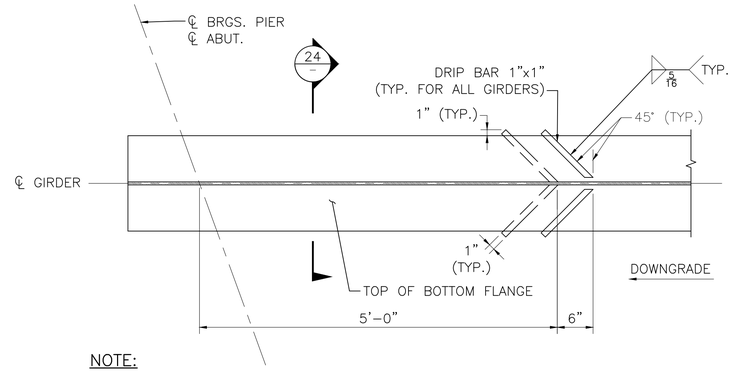

NOTE:

DRIP BARS SHALL BE LOCATED ON THE LOW END OF EACH SPAN FOR ALL GIRDERS.

DRIP BAR DETAIL

SCALE: 1" = 1'-0"

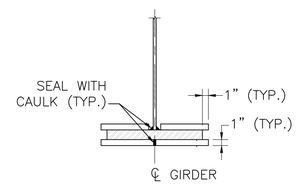

SECTION 24

SCALE: 1" = 1'-0"

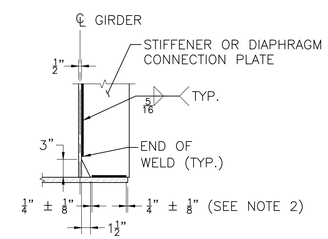

NOTES:

1. AT STIFFENER LOCATIONS, MODIFY THE PLATE ATTACHMENT TO THE FLANGES AS SHOWN IN THE TYPICAL STIFFENER ATTACHMENTS ON SHEETS 34 AND 35.
2. TERMINATE THE WELD 1/4" FROM THE EDGE OF THE FLANGE OR CONNECTION PLATE, WHICHEVER IS ENCOUNTED FIRST.

CLIP DETAIL

SCALE: 1" = 1'-0"

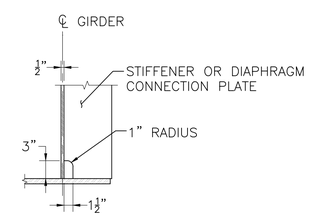

ALTERNATE CLIP DETAIL

SCALE: 1" = 1'-0"

9/10/2022	ISSUED FOR CONSTRUCTION
DATE	DESCRIPTION

THIS SHEET IS APPROVED FOR CONSTRUCTION BY MASSDOT
AUTHORIZED SIGNATORY: STATE BRIDGE ENGINEER
USE ONLY PRINTS OF LATEST DATE

605126_BR37 STEEL DETAILS 4 OF 4 (W050015).DWG Plotted on 14-Oct-2022 3:36 PM
FINAL STRUCTURAL SUBMITTAL (SF) 19-AUGUST-2022

WARE
STATE ROUTE 32 (PALMER ROAD) OVER WARE RIVER

STATE	FED. AID PROJ. NO.	SHEET NO.	TOTAL SHEETS
MA	STP(BR-OFF)-003S(606)X	96	125
PROJECT FILE NO. 605126			

DECK PLAN AND SECTION

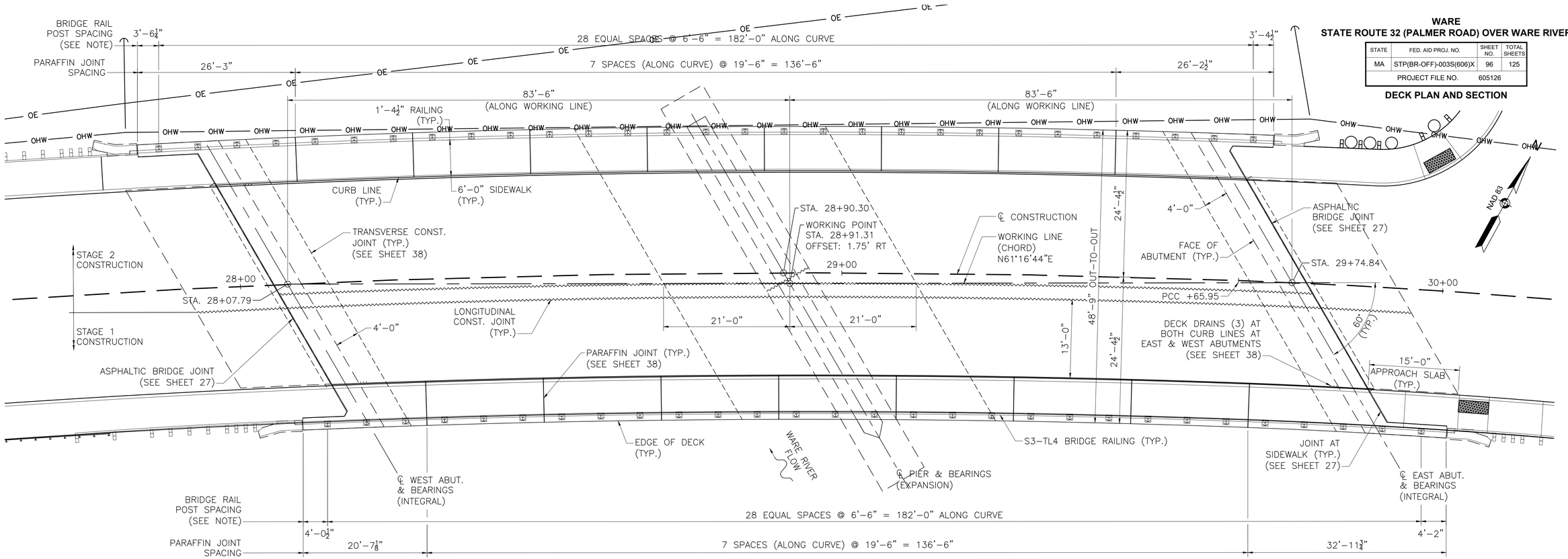

DECK PLAN

SCALE: ⅛"=1'-0"

NOTE:

DIMENSIONS ARE MEASURED TO THE CENTERLINE OF THE BACK OF RAILING POSTS.

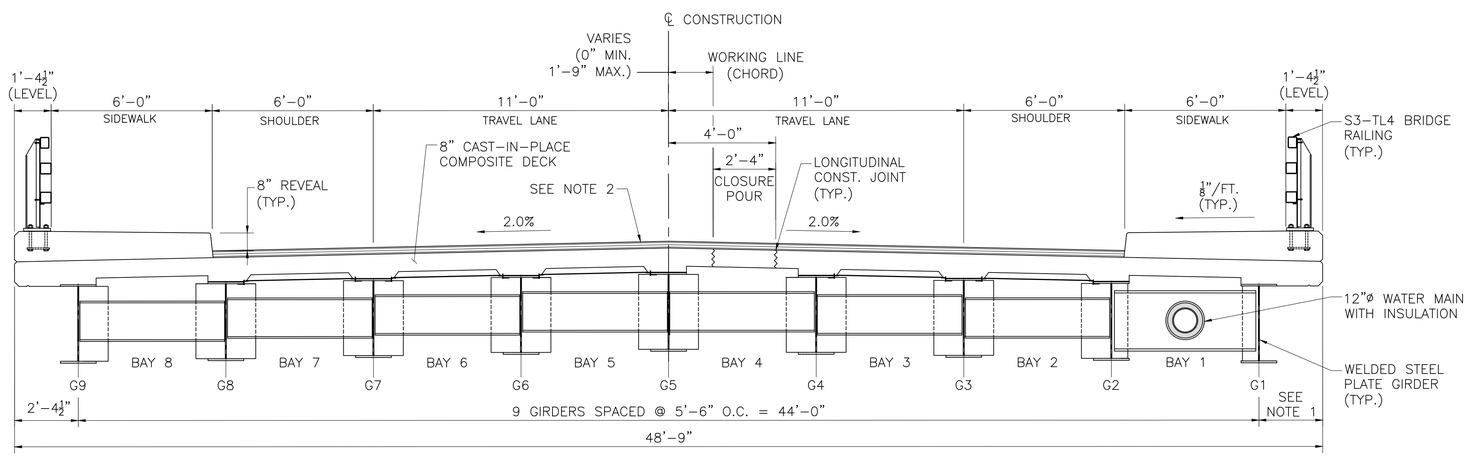

TYPICAL BRIDGE SECTION

SCALE: ⅜"=1'-0"

NOTES:

1. THE WIDTH OF THE OVERHANG IS 2'-4 1/2" FROM THE WEST ABUTMENT TO THE PCC. ALL GIRDERS HAVE A CONSISTENT RADIUS FOR THE FULL LENGTH, BUT THE RADIUS OF THE ROADWAY CHANGES FROM 2000' TO 1000' AT THE PCC. THUS, THE OVERHANG VARIES FROM A MINIMUM OF 2'-4 1/2" AT THE PCC TO A MAXIMUM OF 2'-5 3/4" AT THE FACE OF THE EAST ABUTMENT.
2. 1½" SUPERPAVE BRIDGE SURFACE COURSE – 12.5 (SSC-B-12.5) OVER 1½" SUPERPAVE BRIDGE PROTECTIVE COURSE – 12.5 (SPC-B-12.5) OVER SPRAY APPLIED MEMBRANE WATERPROOFING.

DATE	DESCRIPTION
9/10/2022	ISSUED FOR CONSTRUCTION

THIS SHEET IS APPROVED FOR CONSTRUCTION BY MASSDOT
AUTHORIZED SIGNATORY: STATE BRIDGE ENGINEER
USE ONLY PRINTS OF LATEST DATE

605126_BR38 DECK PLAN (W050151).DWG Plotted on 14-Oct-2022 3:38 PM
FINAL STRUCTURAL SUBMITTAL (SF) 19-AUGUST-2022

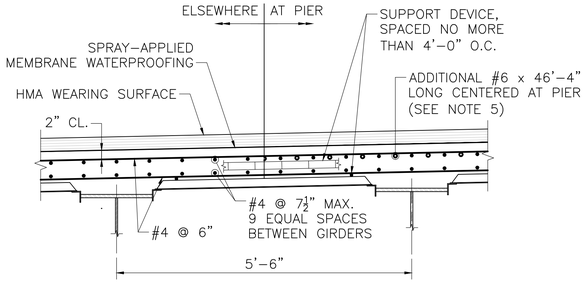

NOTES:

1. ROADWAY DECK SLAB SHALL BE 4,000 PSI, ¾ IN, 585 HP CEMENT CONCRETE.
2. LONGITUDINAL REINFORCEMENT SHALL BE PLACED PARALLEL TO THE CENTERLINE OF CONSTRUCTION. TRANSVERSE (PRIMARY) REINFORCEMENT SHALL BE PLACED PERPENDICULAR TO THE CENTERLINE OF CONSTRUCTION.
3. ALL REINFORCEMENT AND SUPPORT DEVICES SHALL BE COATED.
4. THE FINISHED SURFACE OF BRIDGE DECK SHALL BE SMOOTH AND WITHOUT ANY PROJECTIONS THAT COULD PUNCTURE THE MEMBRANE WATERPROOFING OR DEPRESSIONS THAT COULD RETAIN WATER.
5. PLACE 80 ADDITIONAL #6 LONGITUDINAL TOP REINFORCING BARS OVER THE PIER. THE ADDITIONAL BARS SHALL BE PLACED BETWEEN THE TYPICAL TOP REINFORCING BARS.

TYPICAL DECK REINFORCEMENT

SCALE: ¾" = 1'-0"

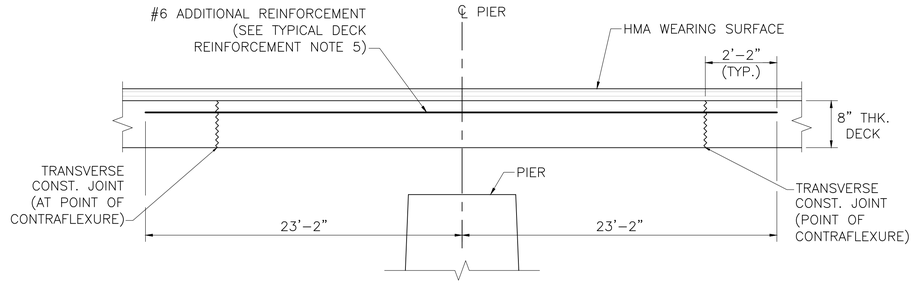

SECTION AT PIER

NOT TO SCALE

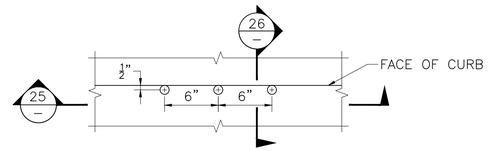

DECK PLAN

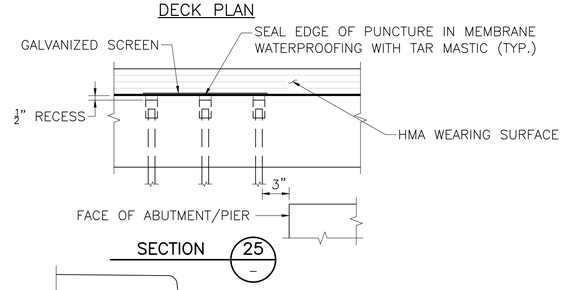

NOTE:

DRAINS SHALL BE LOCATED AT ALL ROADWAY JOINTS AND/OR LOW POINT OF VERTICAL CURVE.

DETAIL – DECK DRAIN PIPES

SCALE: 1½" = 1'-0"

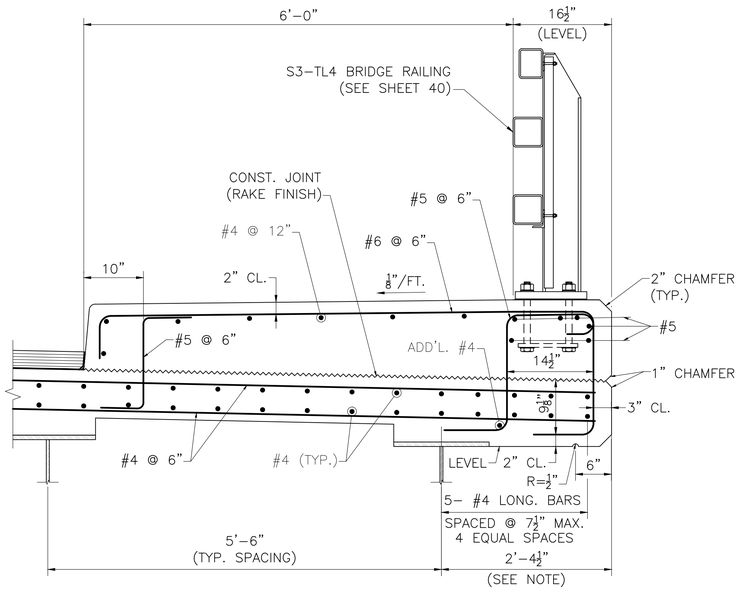

NOTE:

THE WIDTH OF THE OVERHANG IS 2'-4 1/2" FROM THE WEST ABUTMENT TO THE PCC. THE OVERHANG VARIES FROM 2'-4 1/2" AT THE PCC TO 2'-5 3/4" AT THE FACE OF THE EAST ABUTMENT.

SECTION THROUGH SIDEWALK

SCALE: 1" = 1'-0"

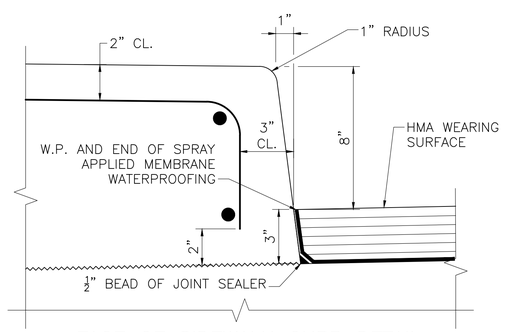

FACE OF SIDEWALK CURB DETAIL

SCALE: 3" = 1'-0"

WARE
STATE ROUTE 32 (PALMER ROAD) OVER WARE RIVER

STATE	FED. AID PROJ. NO.	SHEET NO.	TOTAL SHEETS
MA	STP(BR-OFF)-003S(606)X	97	125
PROJECT FILE NO. 605126			

DECK DETAILS
SHEET 1 OF 2

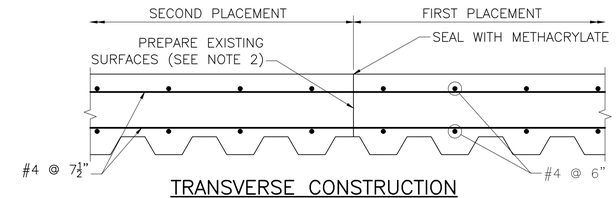

TRANSVERSE CONSTRUCTION JOINT DETAIL IN DECK SLAB

SCALE: 1½" = 1'-0"

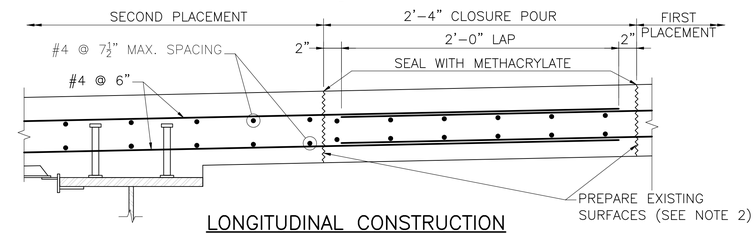

LONGITUDINAL CONSTRUCTION JOINT DETAIL IN DECK SLAB

SCALE: 1½" = 1'-0"

NOTES:

1. BRIDGE DECK SLAB SHALL BE PLACED IN ACCORDANCE WITH THE PLACEMENT SEQUENCE SHOWN ON THE PLAN SHEET 39.
2. THE SURFACE OF THE PREVIOUSLY CAST CONCRETE SHALL BE BLAST CLEANED, ROUGHENED, WETTED WITH CLEAN WATER, AND THEN FLUSHED WITH A MORTAR COMPOSED OF EQUAL PARTS OF THE CEMENT AND SAND SPECIFIED FOR THE NEW CONCRETE, BEFORE NEW CONCRETE IS PLACED ADJACENT THERETO. NEW CONCRETE SHALL BE PLACED BEFORE MORTAR HAS TAKEN INITIAL SET.
3. IN LIEU OF THE MORTAR, AN EPOXY ADHESIVE SUITABLE FOR BONDING FRESH CONCRETE TO HARDENED CONCRETE FOR LOAD BEARING APPLICATIONS MAY BE USED. THE EPOXY ADHESIVE SHALL CONFORM TO AASHTO M 235 TYPE V AND SHALL BE APPLIED IN ACCORDANCE WITH THE MANUFACTURER'S RECOMMENDATIONS.
4. THE CONTRACTOR MAY SUBMIT A PROPOSAL DETAILING THE ELIMINATION OF THE CLOSURE POUR FOR THE APPROVAL OF THE ENGINEER. THE PROPOSAL SHALL DETAIL THE CONTRACTOR'S MEANS AND METHODS FOR ACCURATELY CONSTRUCTING THE DECK SLAB TO THE LINES, GRADES, AND THICKNESS SHOWN ON THE PLANS WITHOUT LEAKAGE OF CONCRETE.
5. DOWEL BAR SPLICERS SHALL BE USED WHERE USE OF LAP SPLICES IS NOT FEASIBLE.

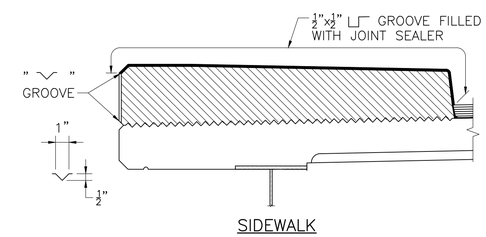

SIDEWALK

PARAFFIN JOINT DETAILS

SCALE: ¾" = 1'-0"

NOTES:

1. ALL CONCRETE ABOVE SLAB SHALL BE POURED IN ALTERNATING SECTIONS WITH NOT LESS THAN 3 DAYS BETWEEN POURS.
2. DO NOT CARRY LONGITUDINAL BARS THROUGH THE PARAFFIN JOINTS. END THE REINFORCEMENT 2" CLEAR OF JOINT.
3. JOINT SHALL BE SQUARE TO FACE OF CURB.

DATE	DESCRIPTION
9/10/2022	ISSUED FOR CONSTRUCTION

THIS SHEET IS APPROVED FOR CONSTRUCTION BY MASSDOT
AUTHORIZED SIGNATORY: STATE BRIDGE ENGINEER
USE ONLY PRINTS OF LATEST DATE

605126_BR39-40-43 DECK DETAILS (W05015).DWG Plotted on 17-Sep-2022 11:15 PM
FINAL STRUCTURAL SUBMITTAL (SF) 19-AUGUST-2022

TOP OF FORM ELEVATIONS FOR DECK SLAB PRIOR TO PLACEMENT OF CONCRETE

INCREASING STATIONS →

GIRDER NO.	℄ WEST ABUT.	SPAN NO. 1 1/10 PT.	2/10 PT.	3/10 PT.	4/10 PT.	5/10 PT.	6/10 PT.	7/10 PT.	8/10 PT.	9/10 PT.	℄ BRG. PIER	SPAN NO. 2 1/10 PT.	2/10 PT.	3/10 PT.	4/10 PT.	5/10 PT.	6/10 PT.	7/10 PT.	8/10 PT.	9/10 PT.	℄ EAST ABUT.
1	390..13	390.27	390.39	390.50	390.59	390.67	390.73	390.79	390.84	390.90	390.97	391.08	391.19	391.32	391.44	391.55	391.64	391.71	391.77	391.81	391.84
2	390.22	390.35	390.47	390.58	390.67	390.75	390.81	390.86	390.92	390.98	391.05	391.15	391.27	391.39	391.51	391.62	391.71	391.78	391.84	391.88	391.91
3	390.30	390.43	390.55	390.65	390.74	390.82	390.88	390.94	390.99	391.06	391.13	391.23	391.34	391.46	391.58	391.68	391.78	391.85	391.91	391.95	391.98
4	390.38	390.51	390.63	390.73	390.83	390.90	390.96	391.02	391.07	391.13	391.21	391.31	391.42	391.54	391.65	391.76	391.85	391.93	391.98	392.02	392.06
5	390.46	390.59	390.71	390.81	390.90	390.98	391.04	391.10	391.15	391.21	391.29	391.38	391.49	391.61	391.73	391.84	391.93	392.00	392.06	392.10	392.13
6	390.32	390.45	390.57	390.67	390.76	390.84	390.90	390.95	391.01	391.07	391.14	391.24	391.35	391.47	391.58	391.69	391.78	391.85	391.91	391.95	391.99
7	390.18	390.31	390.43	390.53	390.62	390.70	390.76	390.82	390.87	390.93	391.00	391.10	391.21	391.33	391.44	391.55	391.64	391.71	391.77	391.81	391.84
8	390.05	390.17	390.29	390.40	390.49	390.56	390.63	390.68	390.73	390.79	390.86	390.96	391.07	391.19	391.30	391.41	391.50	391.57	391.63	391.67	391.70
9	389.91	390.04	390.16	390.27	390.36	390.43	390.49	390.54	390.59	390.65	390.72	390.82	390.93	391.05	391.17	391.27	391.37	391.44	391.49	391.53	391.55

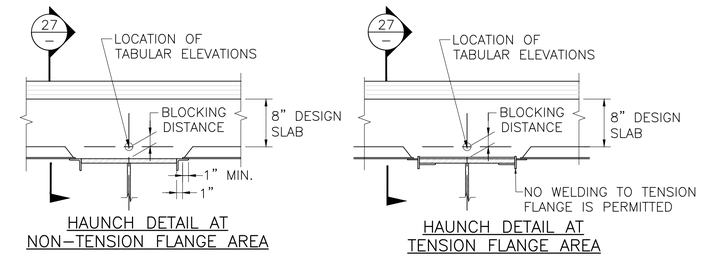

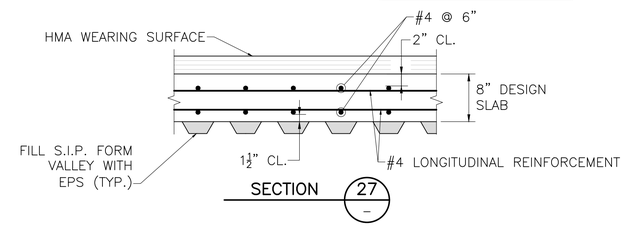

STAY-IN-PLACE FORM DETAILS
NOT TO SCALE

NOTES:

1. AFTER THE BEAMS ARE ERECTED BUT BEFORE THE FORMS ARE BUILT, ELEVATIONS ON TOP OF THE FLANGE OF THE BEAMS ARE TO BE OBTAINED AT THE POINTS INDICATED IN THE TABLE. THE DIFFERENCE BETWEEN THE ELEVATIONS OBTAINED AND THOSE SHOWN IN THE TABLE GIVES THE ACTUAL BLOCKING DISTANCE FROM THE TOP OF BEAM TO THE BOTTOM OF THE SLAB AT CENTER LINE OF BEAM.
2. TABULATED DEFLECTIONS ARE CALCULATED BASED ON THE PROPOSED DECK PLACEMENT SEQUENCE AND THE CONSTRUCTION STAGING SEQUENCE. A CONSTRUCTION STAGING OR DECK POURING SEQUENCE DIFFERENT THAN THAT SHOWN BELOW WILL REQUIRE THE APPROVAL OF THE ENGINEER.
3. THE EMPTY SELF WEIGHT OF THE WATER MAIN AND STEEL FRAMING ARE ASSUMED TO BE ERECTED ONTO THE STAGE 1B CONSTRUCTION GIRDERS PRIOR TO DECK CASTING. THE WEIGHT OF THE WATER WITHIN THE WATER MAIN IS ASSUMED TO BE APPLIED TO THE STRUCTURE AFTER STAGE 1B DECK CASTING AND BEFORE STAGE 2A CONSTRUCTION DECK CASTING. THE CONTRACTOR TO COORDINATE WITH THE ENGINEER IN THE UTILITY AND/OR THEIR CONTENTS ARE TO BE ERECTED IN A DIFFERENT ORDER FOR CONSTRUCTION PURPOSES.
4. ELEVATION SHOTS ALONG EACH GIRDER SHALL NOT BE TAKEN UNTIL ALL STEEL FRAMING AND UTILITIES AS DESCRIBED IN NOTE 3 ARE ERECTED.

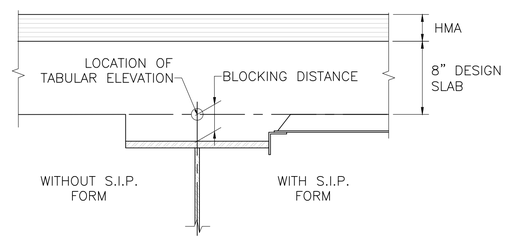

HAUNCH DETAIL
TOP OF FORM DETAILS
NOT TO SCALE

NOTES:

1. SET TOP OF FORMS AT ELEVATIONS GIVEN IN TABLE.
2. FILL THE VALLEYS OF THE S.I.P. FORM WITH EXPANDED POLYSTYRENE (EPS).
3. FORM ENDS SHALL BE CRIMPED CLOSED IN A TAPERED MANNER. TAPER THE EPS FILL AND SEPARATE END CLOSURE PIECES WILL NOT BE ALLOWED.
4. SUPPORT ANGLES SHALL BE PLACED IN THE "LEG DOWN" POSITION WHERE POSSIBLE. WHERE "LEG UP" POSITION IS NECESSARY, THE UPPER MOST PORTION OF THE ANGLE SHALL NOT PROJECT MORE THAN 1" ABOVE THE TOP FLANGE OR COVER PLATE. THE CONTRACTOR SHALL HAVE AN ASSORTMENT OF ANGLES OF VARIOUS SIZES AVAILABLE ON THE SITE TO CONFORM TO THIS REQUIREMENT.
5. CONTRACTOR SHALL DESIGN AND DETAIL ALL ELEMENTS OF THE FORMING SYSTEM AND SHALL SUBMIT TO THE ENGINEER FOR APPROVAL.
6. IN CASES WHERE STANDARD 2" OR 3" DEEP S.I.P. FORMS DO NOT SATISFY DESIGN REQUIREMENTS AN ALTERNATIVE FORMING SYSTEM CONSISTING OF DEEPER S.I.P. FORMS OR REMOVABLE FORMS SHALL BE DESIGNED AND DETAILED BY THE CONTRACTOR AND SUBMITTED TO THE ENGINEER FOR APPROVAL. THE DESIGN THICKNESS OF THE SLAB SHALL NOT BE REDUCED.
7. SIP FORMS ARE PROHIBITED AND REMOVABLE FORMS SHALL BE USED IN BAYS 1, 4 AND 8 DUE TO THE PROXIMITY OF THE CURBLINES, STAGED CONSTRUCTION JOINT AND OVER HANGING PORTIONS OF THE DECK SLAB

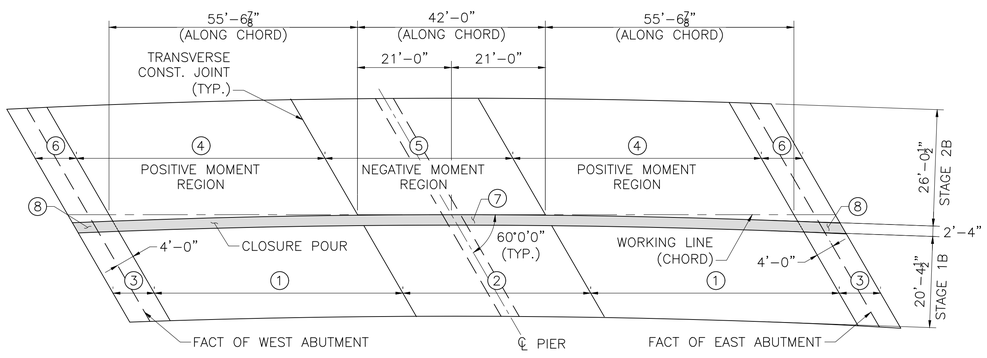

NOTE:
POUR 8 FOR THE CLOSURE POUR ABOVE THE ABUTMENTS IS OPTIONAL AND MAY BE ELIMINATED BY THE CONTRACTOR.

DECK PLACEMENT SEQUENCE
SCALE: 1" = 16'-0"

DATE	DESCRIPTION
9/10/2022	ISSUED FOR CONSTRUCTION

THIS SHEET IS APPROVED FOR CONSTRUCTION BY MASSDOT
AUTHORIZED SIGNATORY: STATE BRIDGE ENGINEER
USE ONLY PRINTS OF LATEST DATE

605126_BR39-40-43 DECK DETAILS (W05015).DWG Plotted on 17-Sep-2022 11:15 PM
FINAL STRUCTURAL SUBMITTAL (SF) 19-AUGUST-2022

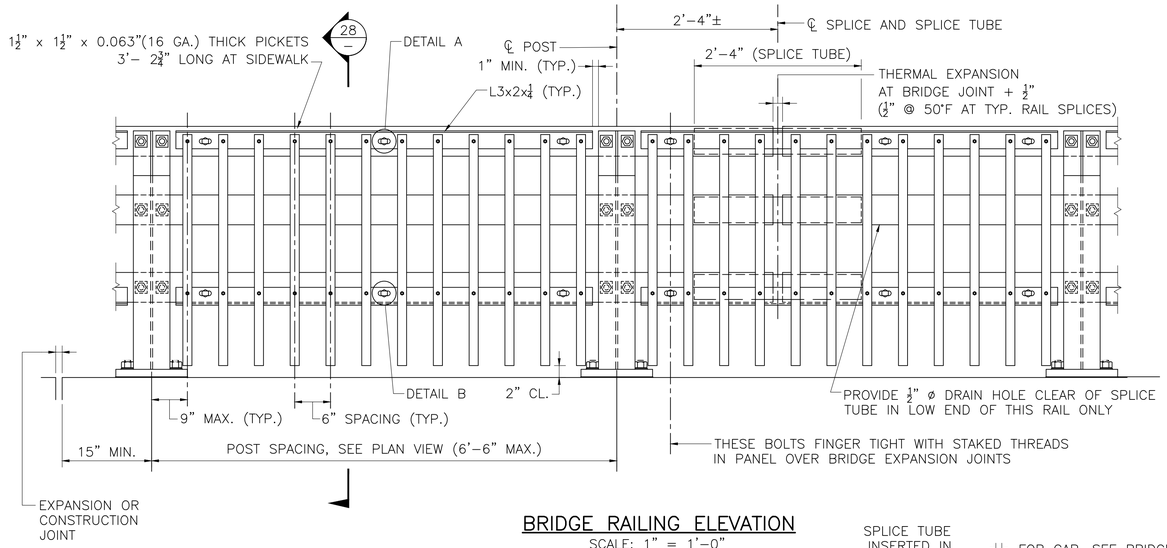

BRIDGE RAILING ELEVATION

SCALE: 1" = 1'–0"

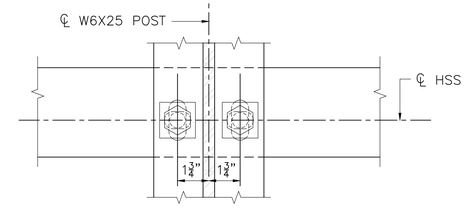

SECTION THRU POST WEB

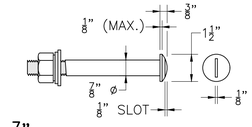

⅞" ø ROUND HEAD BOLT

SCALE: 3" = 1'–0"

WARE
STATE ROUTE 32 (PALMER ROAD) OVER WARE RIVER

STATE	FED. AID PROJ. NO.	SHEET NO.	TOTAL SHEETS
MA	STP(BR-OFF)-003S(606)X	99	125
PROJECT FILE NO. 605126			

S3-TL4 BRIDGE RAILING DETAILS

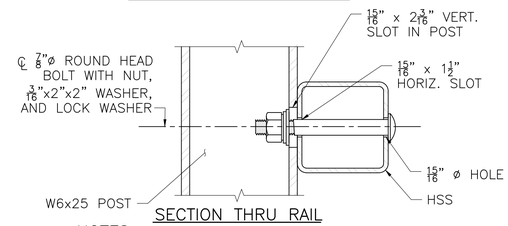

SECTION THRU RAIL

NOTES:
CONNECTIONS AT LOWER RAILS SHOWN.
CONNECTIONS AT TOP RAIL SIMILAR.

TYPICAL RAIL TO POST CONNECTIONS

SCALE: 1" = 1'–0"

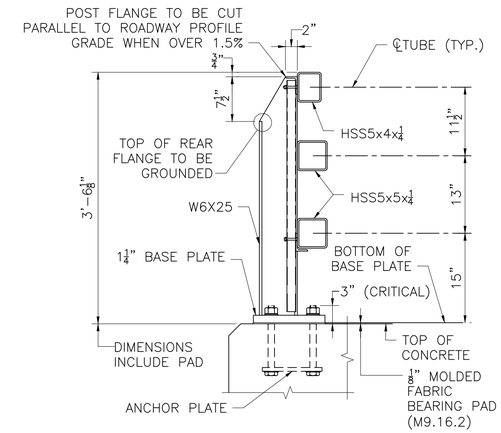

SECTION 28

SCALE: 1" = 1'–0"

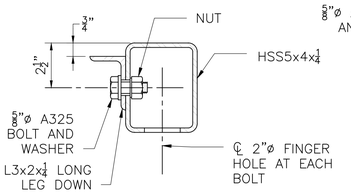

SECTION 29

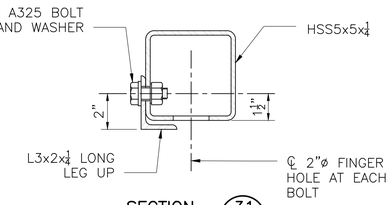

SECTION 31

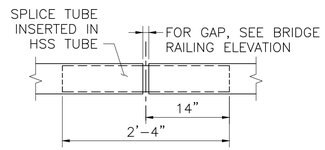

TYPICAL SPLICE

SCALE: 1" = 1'–0"

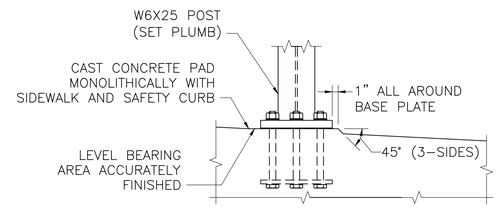

SETTING OF POSTS (PROFILE GRADE OVER 1.5%)

SCALE: 1" = 1'–0"

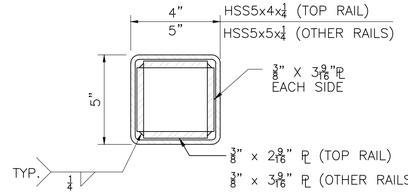

SPLICE TUBE DETAILS

SCALE: 3" = 1'–0"

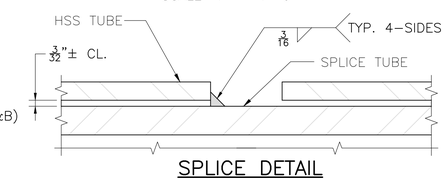

SPLICE DETAIL

FULL SIZE

RAILING NOTES:

1. RAIL POST AND BASE PLATES SHALL CONFORM TO THE REQUIREMENTS OF AASHTO M 270 GRADE 50. HOLLOW RAILING STRUCTURAL TUBING (HSS) SHALL CONFORM TO THE REQUIREMENTS OF ASTM A 500 WITH A CERTIFIED Fy = 50 KSI MINIMUM. THE MINIMUM HORIZONTAL BENDING RADII OF THE HSS TUBING SHALL BE 8 FEET. PICKET CARRIER ANGLES, ANCHOR PLATES, AND SPLICE TUBE PLATES SHALL CONFORM TO THE REQUIREMENTS OF AASHTO M 270 GRADE 36. PICKET TUBING SHALL CONFORM TO ASTM A 513 WITH Fy = 36 KSI MIN. OR A 500 GRADE B.
2. ALL STEEL (EXCEPT THE ⅝" ANCHOR PLATE AND FASTENERS) SHALL BE GALVANIZED AND PAINTED DARK BRONZE (FEDERAL STD. 595B COLOR NO. 10045). ANCHOR PLATE SHALL BE GALVANIZED ONLY. HEADS OF ⅞" ø ROUND HEAD BOLTS SHALL BE PAINTED TO MATCH RAIL.
3. ANCHOR BOLTS SHALL BE SET WITH TEMPLATES. THE NUT SECURING THE POST BASE PLATE TO THE CONCRETE SHALL BE TIGHTENED TO A SNUG FIT AND GIVEN AN ADDITIONAL 1/8 TURN AFTER STEEL IS IN PLACE.
4. RAILS SHALL BE CONTINUOUS OVER A MINIMUM OF FOUR (4) POSTS WITHOUT SPLICES WHERE POSSIBLE. RAILS SHALL BE SPLICED IN THE PANELS OVER EXPANSION JOINT.
5. ENDS OF TUBE SECTIONS SHALL BE SAWED. GRIND SMOOTH EXPOSED EDGES. ALL CUT ENDS SHALL BE TRUE AND SMOOTH.
6. ALL POSTS TO BE PLUMB WHEN PROFILE GRADE EXCEEDS 1.5%. FOR PROFILE GRADES LESS THAN 1.5%, POSTS SHALL BE SET PERPENDICULAR TO GRADE.
7. POST FLANGE WELD DOES NOT REQUIRE MAGNETIC PARTICLE TESTING. WELD SHALL BE BACK–GOUGED ON BACK SIDE EXCEPT AT WEB. WELD IS THE SAME ON BOTH FLANGES.
8. ⅞" ø ROUND HEAD BOLTS SHALL CONFORM TO THE CHEMICAL AND PHYSICAL REQUIREMENTS OF AASHTO M164.

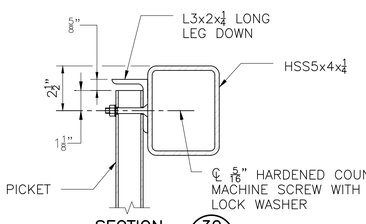

SECTION 30

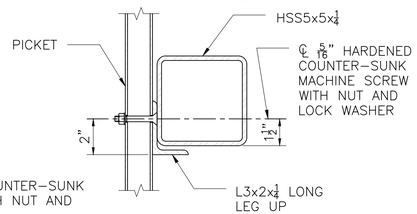

SECTION 32

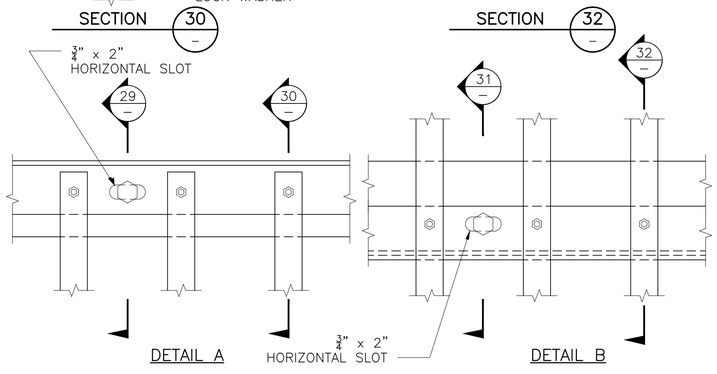

TYPICAL PICKET TO RAIL DETAILS

SCALE: 3" = 1'–0"

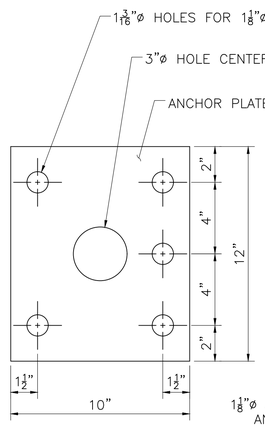

ANCHOR PLATE

SCALE: 3" = 1'–0"

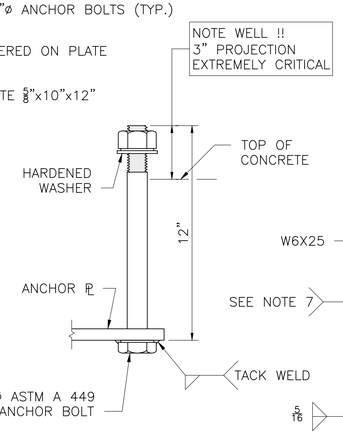

ANCHOR BOLT

SCALE: 3" = 1'–0"

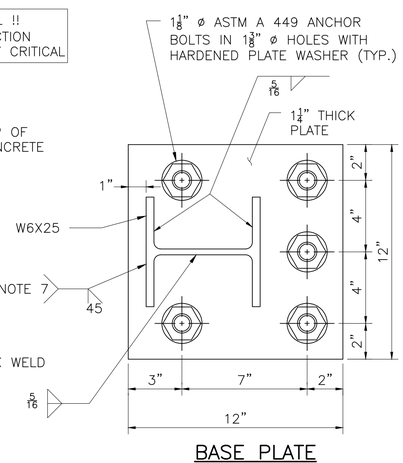

BASE PLATE

SCALE: 3" = 1'–0"

S3–TL4 BRIDGE RAILING

9/10/2022	ISSUED FOR CONSTRUCTION
DATE	DESCRIPTION

THIS SHEET IS APPROVED FOR CONSTRUCTION BY MASSDOT AUTHORIZED SIGNATORY: STATE BRIDGE ENGINEER

USE ONLY PRINTS OF LATEST DATE

605126_BR41-42 RAILING DETAILS.DWG Plotted on 17-Sep-2022 11:16 PM
FINAL STRUCTURAL SUBMITTAL (SF) 19-AUGUST-2022

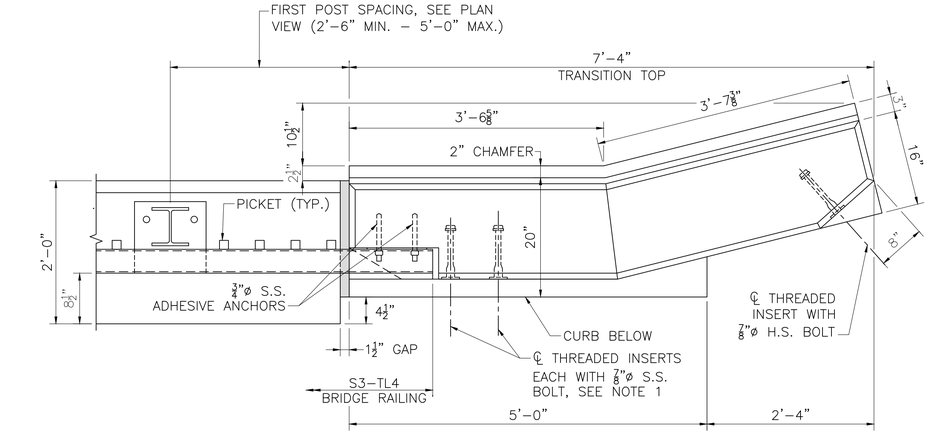

PLAN AT SIDEWALK
SCALE: 1" = 1'-0"

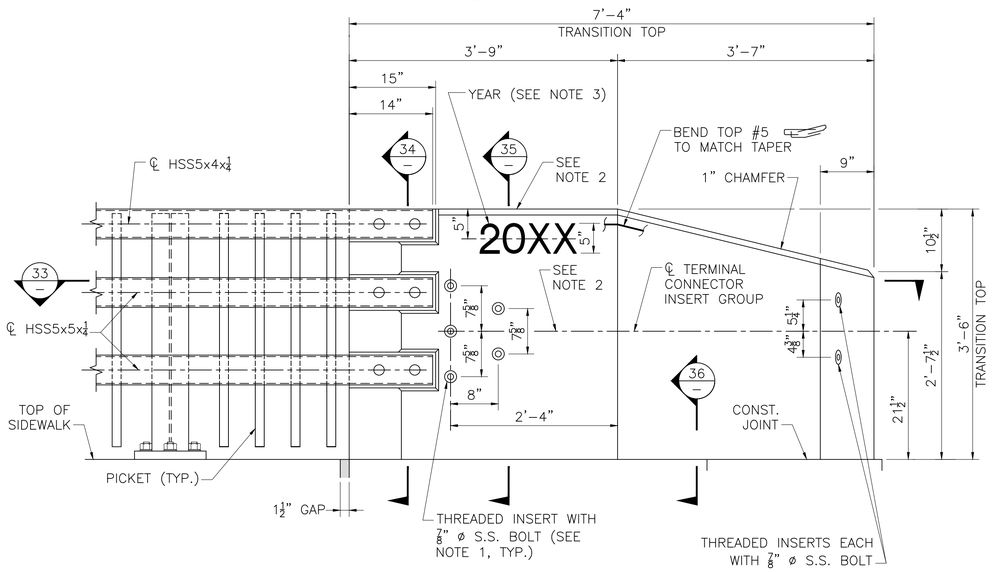

ELEVATION AT SIDEWALK
SCALE: 1" = 1'-0"

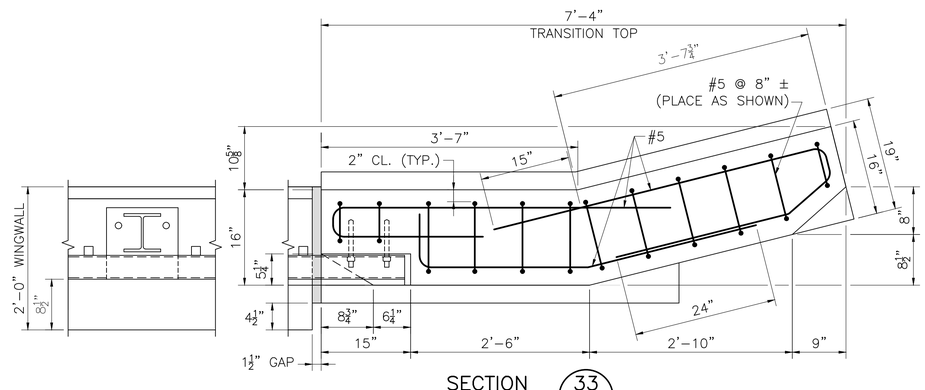

SECTION 33
SCALE: 1" = 1'-0"

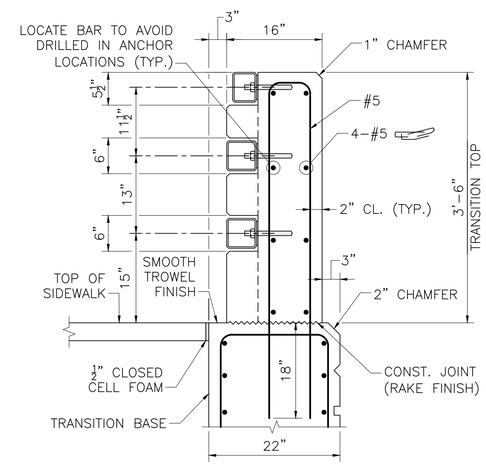

SECTION 34
SCALE: 1" = 1'-0"

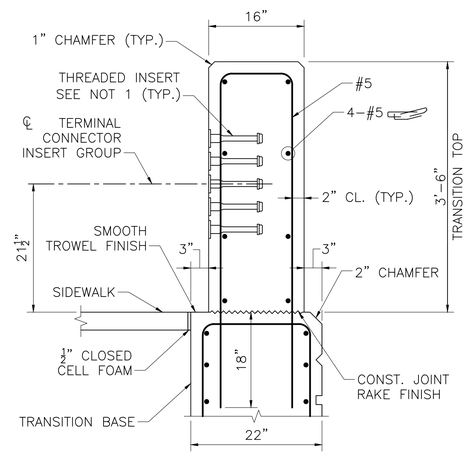

SECTION 35
SCALE: 1" = 1'-0"

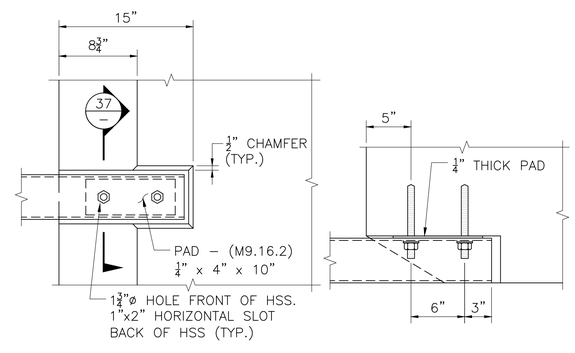

ELEVATION PLAN

RAIL ATTACHMENT
SCALE: 1½" = 1'-0"

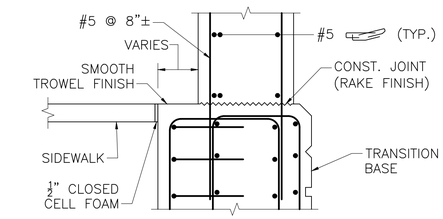

SECTION 36
SCALE: 1" = 1'-0"

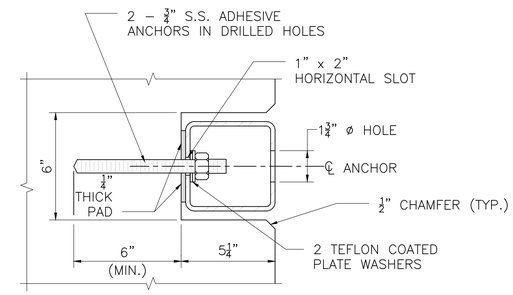

SECTION 37
SCALE: 3" = 1'-0"

NOTES:

1. THREADED INSERTS SHALL BE PREQUALIFIED BY THE MANUFACTURER AS BEING CAPABLE OF DEVELOPING A NOMINAL SHEAR RESISTANCE OF 20 KIPS PER ⅞" ø S.S. BOLT. S.S. BOLTS SHALL BE ⅞" ø x 1½" LONG FULLY THREADED AISI TYPE 304N STAINLESS STEEL. INSERTS FOR ⅞" S.S. BOLTS SHALL BE GALVANIZED AND CAST INTO THE TRANSITION.

2. FOR AN APPROACH GRADE UP TO 3%, THE TRANSITION MAY BE CAST SQUARE AND SET PLUMB WITH THE MINIMUM EMBEDMENT DEPTH SHOWN. THE TERMINAL CONNECTOR INSERT GROUP SHALL BE SQUARE TO THE POST.

   FOR AN APPROACH GRADE IN EXCESS OF 3%, THE TRANSITION TOP AND THE TOP OF CURB SHALL FOLLOW THE APPROACH GRADE. THE HEIGHT OF THE TRANSITION TOP SHALL VARY PROVIDED THAT THE MINIMUM DIMENSIONS SHOWN ON THE CONSTRUCTION DRAWINGS ARE MET. THE BOTTOM OF THE TRANSITION BASE SHALL BE SET LEVEL WITH THE MINIMUM EMBEDMENT DEPTH SHOWN. THE TERMINAL CONNECTOR INSERT GROUP SHALL BE SLOPED TO FOLLOW THE APPROACH GRADE.

3. USE LATEST CONTRACT COMPLETION YEAR IN EFFECT WHEN THE FIRST GUARDRAIL TRANSITION IS CAST. USE THIS YEAR FOR ALL GUARDRAIL TRANSITIONS.

4. ALL CONCRETE FOR THE HIGHWAY GUARDRAIL TRANSITION SHALL BE 5000 PSI, ¾", 685 HP CEMENT CONCRETE.

TOP OF GUARDRAIL TRANSITION FOR S3-TL4 RAILING

WARE
STATE ROUTE 32 (PALMER ROAD) OVER WARE RIVER

STATE	FED. AID PROJ. NO.	SHEET NO.	TOTAL SHEETS
MA	STP(BR-OFF)-003S(606)X	100	125
PROJECT FILE NO.	605126		

HIGHWAY GUARDRAIL TRANSITION S3-TL4 RAILING

DATE	DESCRIPTION
9/10/2022	ISSUED FOR CONSTRUCTION

THIS SHEET IS APPROVED FOR CONSTRUCTION BY MASSDOT
AUTHORIZED SIGNATORY: STATE BRIDGE ENGINEER
USE ONLY PRINTS OF LATEST DATE

605126_BR41-42 RAILING DETAILS.DWG Plotted on 17-Sep-2022 11:16 PM
FINAL STRUCTURAL SUBMITTAL (SF) 19-AUGUST-2022

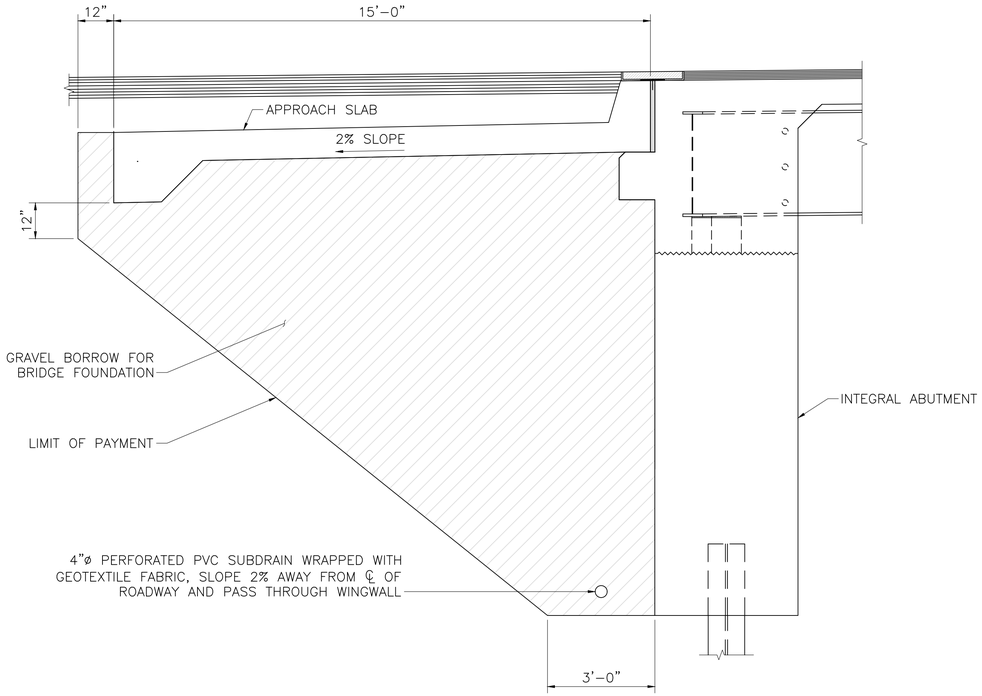

INTEGRAL ABUTMENT BACKFILL

SCALE: $\frac{1}{2}$" = 1'-0"

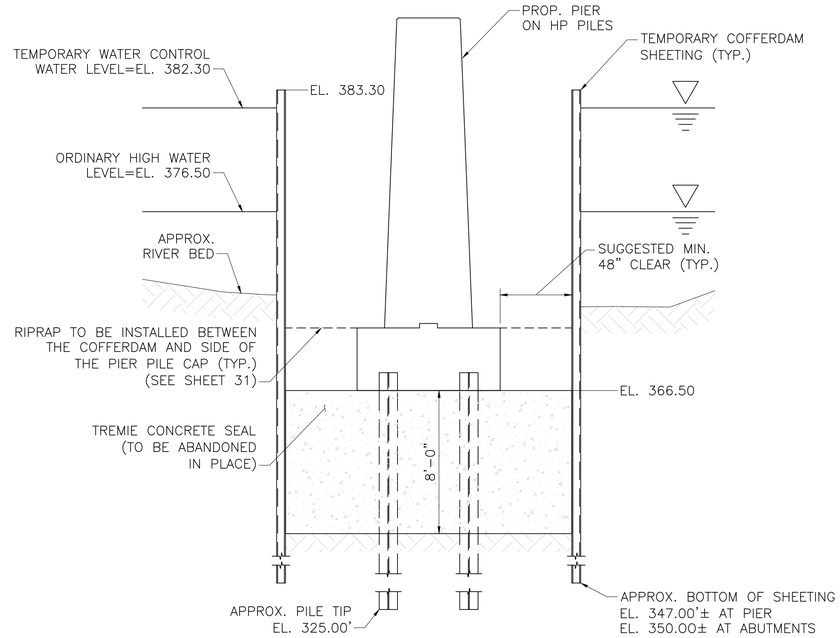

NOTES:

1. CONTRACTOR IS RESPONSIBLE FOR THE DESIGN OF ALL CONTROL OF WATER, COFFERDAMS, SUPPORT OF EXCAVATION, AND THE TREMIE SEAL.
2. SEE STAGE CONSTRUCTION SEQUENCING PLANS ON SHEETS 14–21 FOR SUGGESTED LOCATIONS OF CONTROL OF WATER, COFFERDAMS, AND SUPPORT OF EXCAVATION.
3. ALL COFFERDAMS AND CONTROL OF WATER IN THE RIVER SHALL BE CUT BELOW THE MUD LINE AND ABANDONED IN PLACE UPON THE COMPLETION OF CONSTRUCTION. THE RIVER BED SHALL BE RESTORED TO PRE–CONSTRUCTION CONDITIONS WHERE DISTURBED BY INSTALLATION AND CUTTING OF THE COFFERDAMS AND CONTROL OF WATER. THE TREMIE SEAL FOR THE PIER COFFERDAM IS TO BE ABANDONED IN PLACE.

CONTROL OF WATER

SCALE: $\frac{1}{4}$" = 1'-0"

WARE
STATE ROUTE 32 (PALMER ROAD) OVER WARE RIVER

STATE	FED. AID PROJ. NO.	SHEET NO.	TOTAL SHEETS
MA	STP(BR-OFF)-003S(606)X	101	125
PROJECT FILE NO. 605126			

MISCELLANEOUS DETAILS

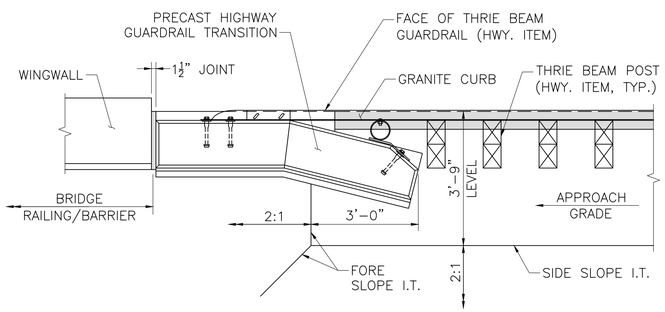

HIGHWAY GUARDRAIL TRANSITION GRADING REQUIREMENTS PLAN

SCALE: $\frac{1}{2}$" = 1'-0"

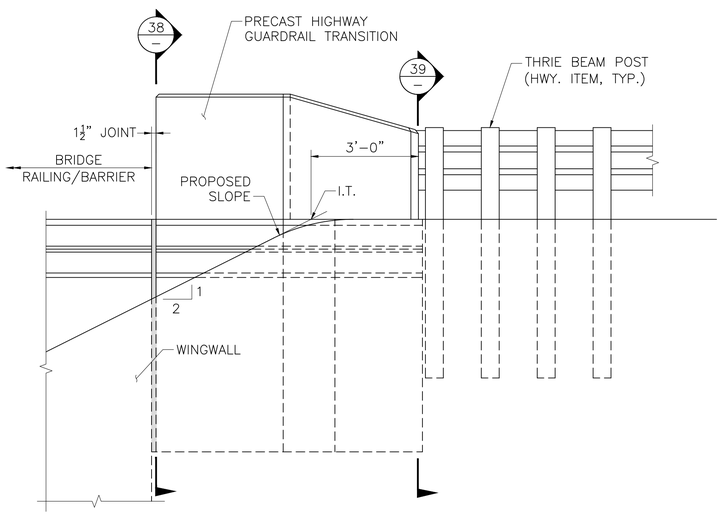

HIGHWAY GUARDRAIL TRANSITION GRADING REQUIREMENTS ELEVATION

SCALE: $\frac{1}{2}$" = 1'-0"

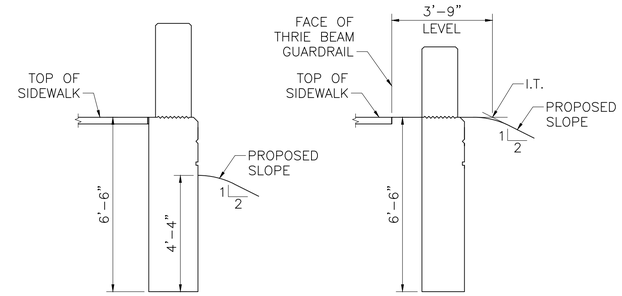

SECTION 38 – SCALE: $\frac{3}{8}$" = 1'-0"

SECTION 39 – SCALE: $\frac{3}{8}$" = 1'-0"

DATE	DESCRIPTION
9/10/2022	ISSUED FOR CONSTRUCTION

THIS SHEET IS APPROVED FOR CONSTRUCTION BY MASSDOT
AUTHORIZED SIGNATORY: STATE BRIDGE ENGINEER
USE ONLY PRINTS OF LATEST DATE

605126_BR39-40-43 DECK DETAILS (W05015).DWG Plotted on 14-Oct-2022 3:38 PM
FINAL STRUCTURAL SUBMITTAL (SF) 19-AUGUST-2022

WARE
PALMER ROAD (ROUTE 32) OVER WARE RIVER
BRIDGE NO. W-05-015

STATE	FED. AID PROJ. NO.	SHEET NO.	TOTAL SHEETS
MA	STP(BR-OFF)-003S(606)X	102	125
PROJECT FILE NO.	605126		

CROSS SECTIONS
PALMER ROAD

605126_HD_X-SECTIONS.DWG Plotted on 19-Aug-22 1:10 PM

Material(s) at Station 22+50.00	
Material Name	Area
CUT	27.718 SF
FILL	0.000 SF

22+50

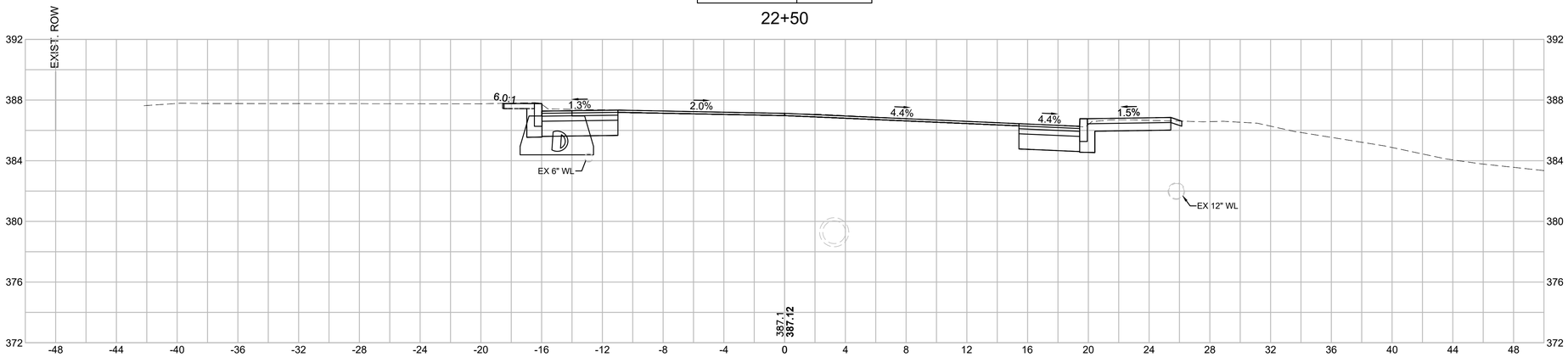

Material(s) at Station 22+18.00	
Material Name	Area
CUT	28.626 SF
FILL	0.014 SF

22+18

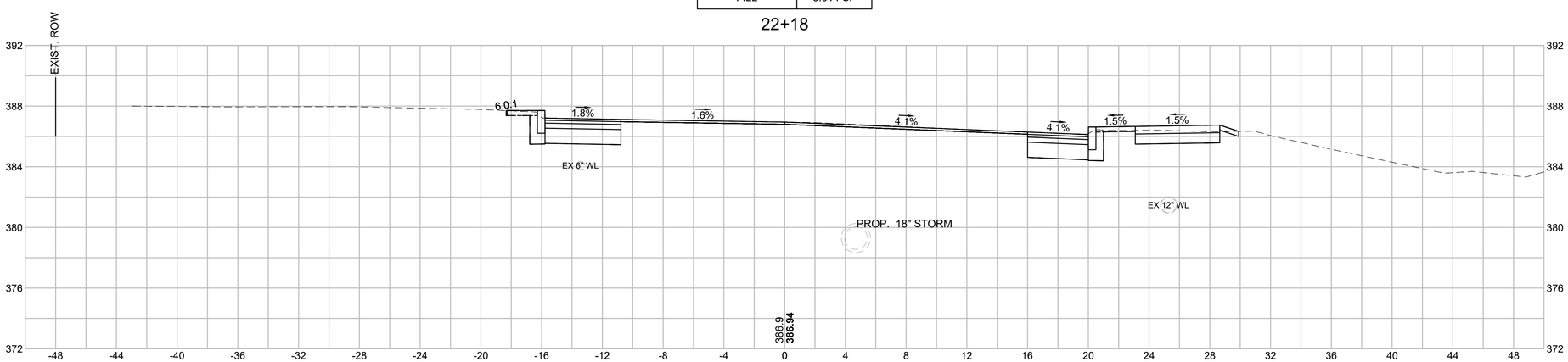

SUPERELEVATION
PC = 21+57.36
R = 2,000'
PCC = 29+65.95

HOR. SCALE IN FEET
4 0 4 8
4 0 4 8
VER. SCALE IN FEET

WARE
PALMER ROAD (ROUTE 32) OVER WARE RIVER
BRIDGE NO. W-05-015

STATE	FED. AID PROJ. NO.	SHEET NO.	TOTAL SHEETS
MA	STP(BR-OFF)-003S(606)X	103	125
PROJECT FILE NO.	605126		

CROSS SECTIONS
PALMER ROAD

605126_HD_X-SECTIONS.DWG Plotted on 19-Aug-22 1:10 PM

Material(s) at Station 23+50.00	
Material Name	Area
CUT	28.152 SF
FILL	0.000 SF

23+50

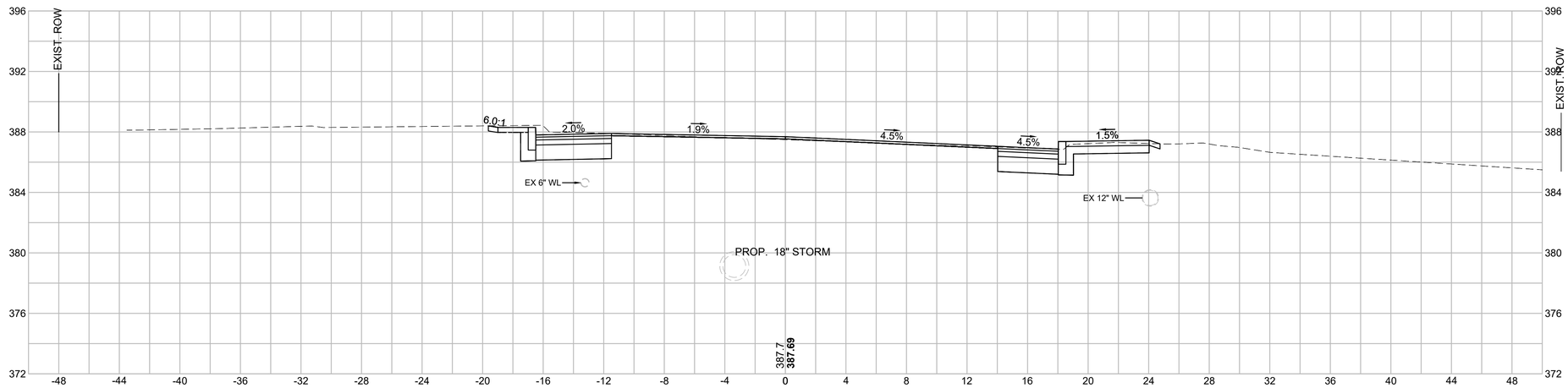

Material(s) at Station 23+00.00	
Material Name	Area
CUT	28.293 SF
FILL	0.004 SF

23+00

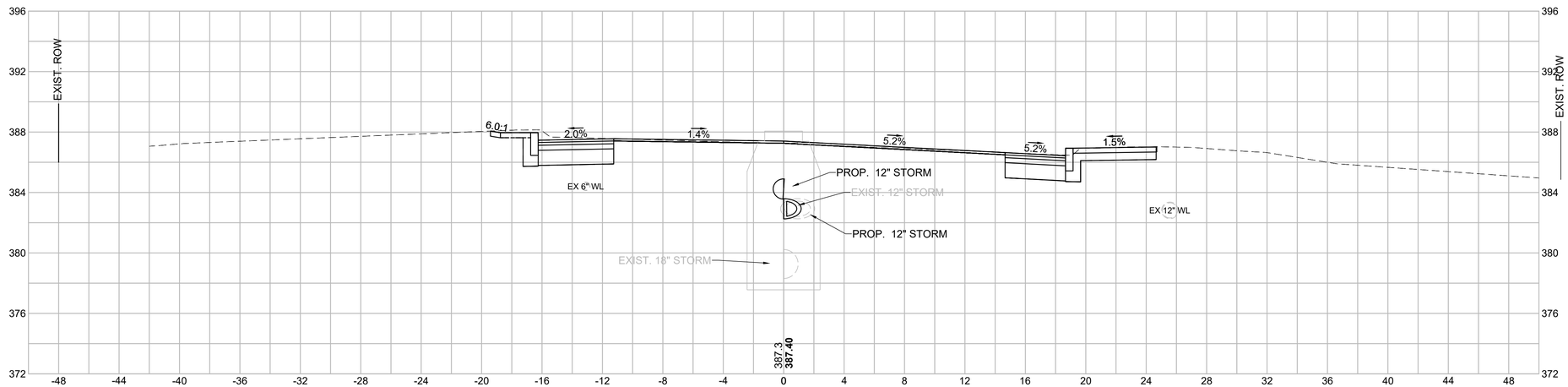

SUPERELEVATION
PC = 21+57.36
R = 2,000'
PCC = 29+65.95

HOR. SCALE IN FEET
4 0 4 8
4 0 4 8
VER. SCALE IN FEET

WARE
PALMER ROAD (ROUTE 32) OVER WARE RIVER
BRIDGE NO. W-05-015

STATE	FED. AID PROJ. NO.	SHEET NO.	TOTAL SHEETS
MA	STP(BR-OFF)-003S(606)X	104	125
PROJECT FILE NO.	605126		

CROSS SECTIONS
PALMER ROAD

Material(s) at Station 24+50.00	
Material Name	Area
CUT	33.604 SF
FILL	0.000 SF

24+50

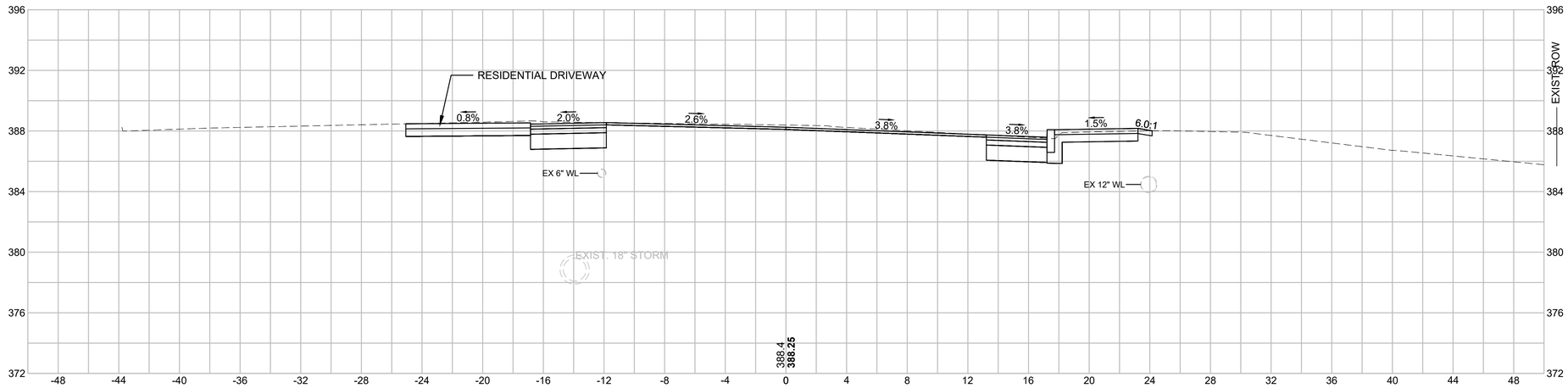

Material(s) at Station 24+00.00	
Material Name	Area
CUT	41.108 SF
FILL	0.000 SF

24+00

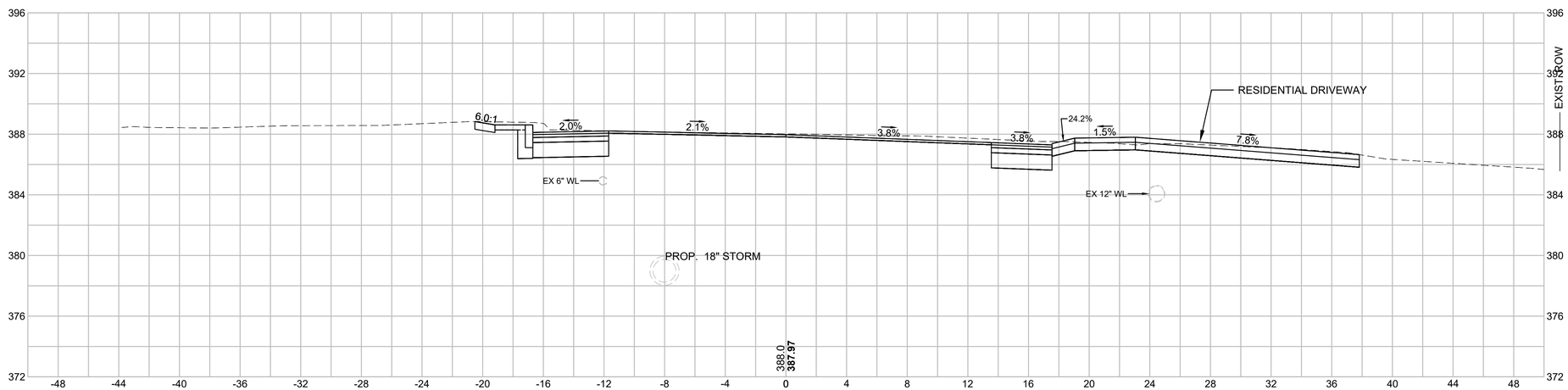

SUPERELEVATION
PC = 21+57.36
R = 2,000'
PCC = 29+65.95

HOR. SCALE IN FEET
4 0 4 8
4 0 4 8
VER. SCALE IN FEET

605126_HD_X-SECTIONS.DWG Plotted on 19-Aug-22 1:10 PM

WARE
PALMER ROAD (ROUTE 32) OVER WARE RIVER
BRIDGE NO. W-05-015

STATE	FED. AID PROJ. NO.	SHEET NO.	TOTAL SHEETS
MA	STP(BR-OFF)-003S(606)X	105	125
PROJECT FILE NO.	605126		

CROSS SECTIONS
PALMER ROAD

Material(s) at Station 25+50.00	
Material Name	Area
CUT	77.064 SF
FILL	0.000 SF

25+50

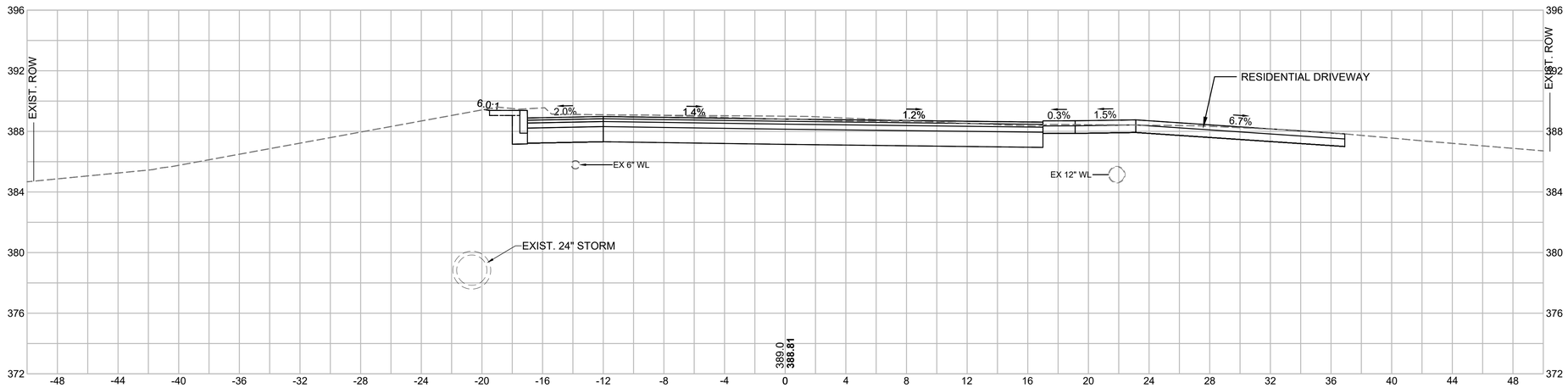

Material(s) at Station 25+00.00	
Material Name	Area
CUT	30.523 SF
FILL	0.000 SF

25+00

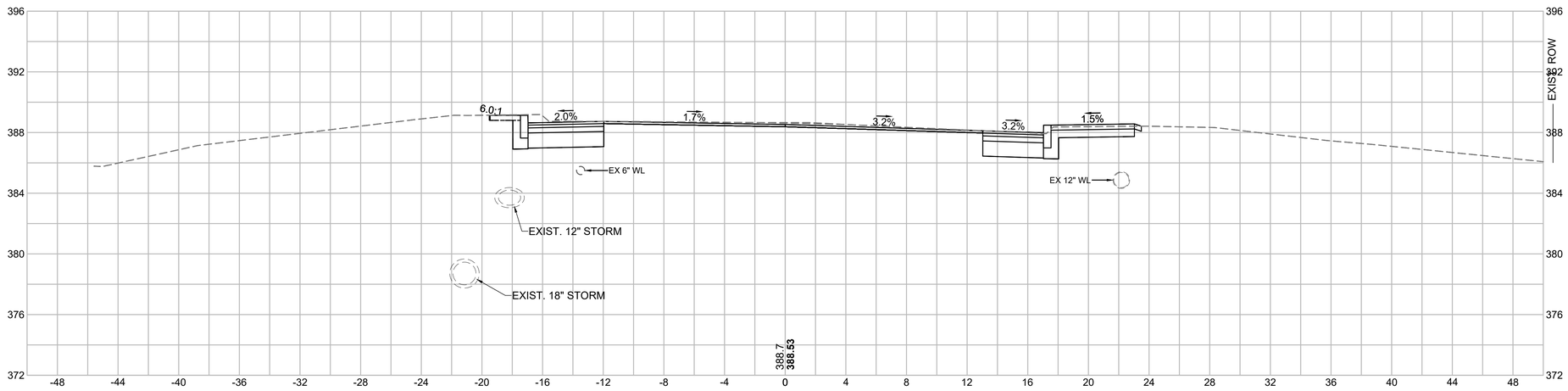

SUPERELEVATION
PC = 21+57.36
R = 2,000'
PCC = 29+65.95

HOR. SCALE IN FEET
4 0 4 8
4 0 4 8
VER. SCALE IN FEET

605126_HD_X-SECTIONS.DWG Plotted on 19-Aug-22 1:10 PM

WARE
PALMER ROAD (ROUTE 32) OVER WARE RIVER
BRIDGE NO. W-05-015

STATE	FED. AID PROJ. NO.	SHEET NO.	TOTAL SHEETS
MA	STP(BR-OFF)-003S(606)X	106	125
PROJECT FILE NO.	605126		

CROSS SECTIONS
PALMER ROAD

Material(s) at Station 26+50.00	
Material Name	Area
CUT	65.046 SF
FILL	29.461 SF

26+50

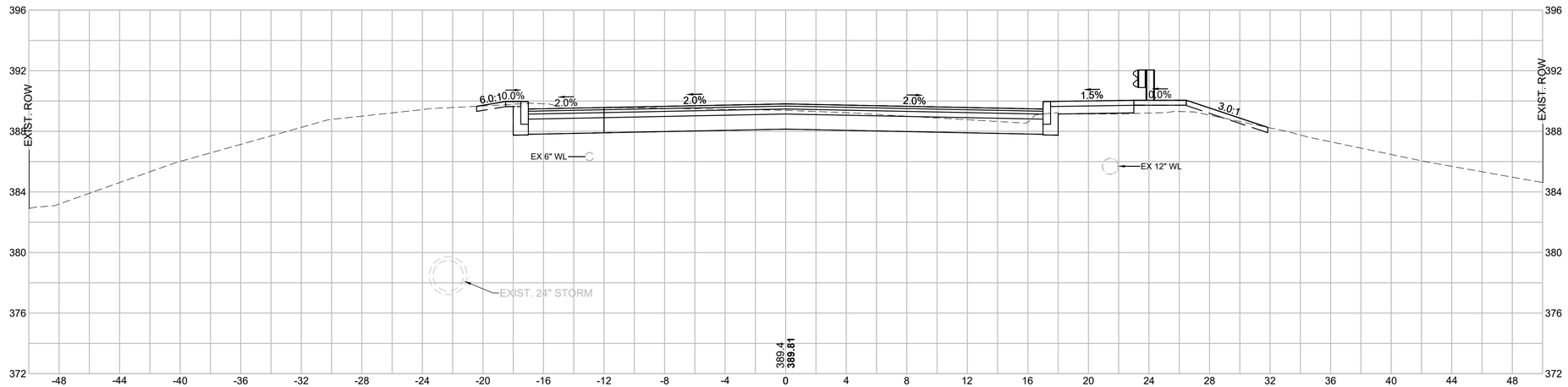

Material(s) at Station 26+00.00	
Material Name	Area
CUT	66.160 SF
FILL	0.759 SF

26+00

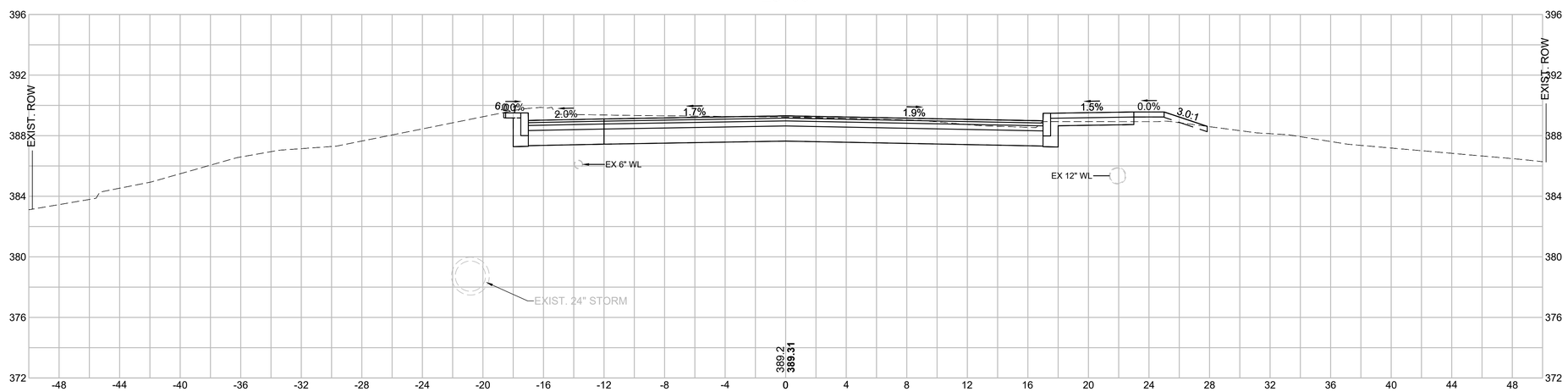

HOR. SCALE IN FEET
4 0 4 8
4 0 4 8
VER. SCALE IN FEET

605126_HD_X-SECTIONS.DWG Plotted on 19-Aug-22 1:10 PM

WARE
PALMER ROAD (ROUTE 32) OVER WARE RIVER
BRIDGE NO. W-05-015

STATE	FED. AID PROJ. NO.	SHEET NO.	TOTAL SHEETS
MA	STP(BR-OFF)-003S(606)X	107	125
PROJECT FILE NO.	605126		

CROSS SECTIONS
PALMER ROAD

Material(s) at Station 27+50.00	
Material Name	Area
CUT	32.176 SF
FILL	24.910 SF

27+50

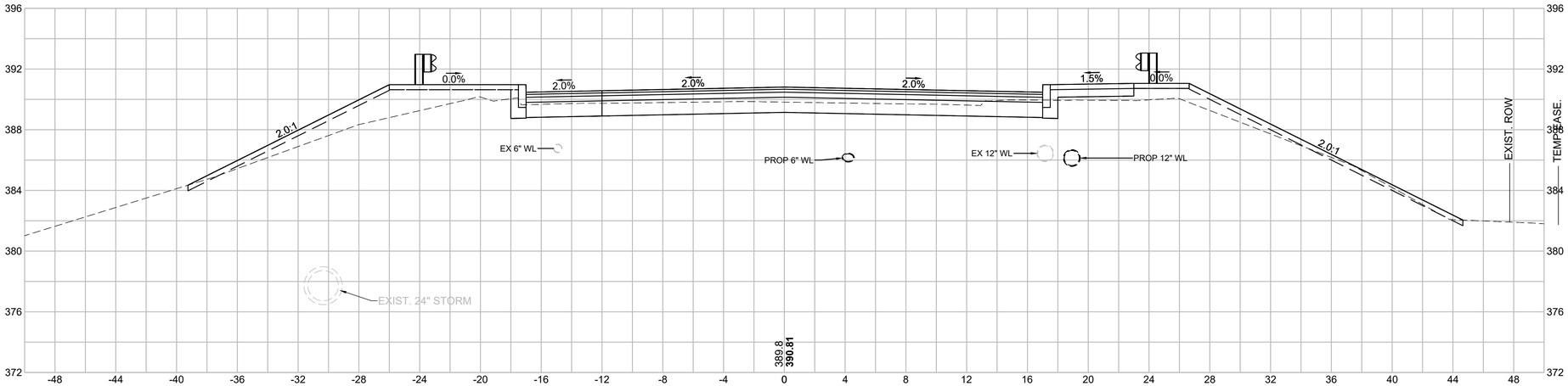

Material(s) at Station 27+00.00	
Material Name	Area
CUT	43.075 SF
FILL	14.908 SF

27+00

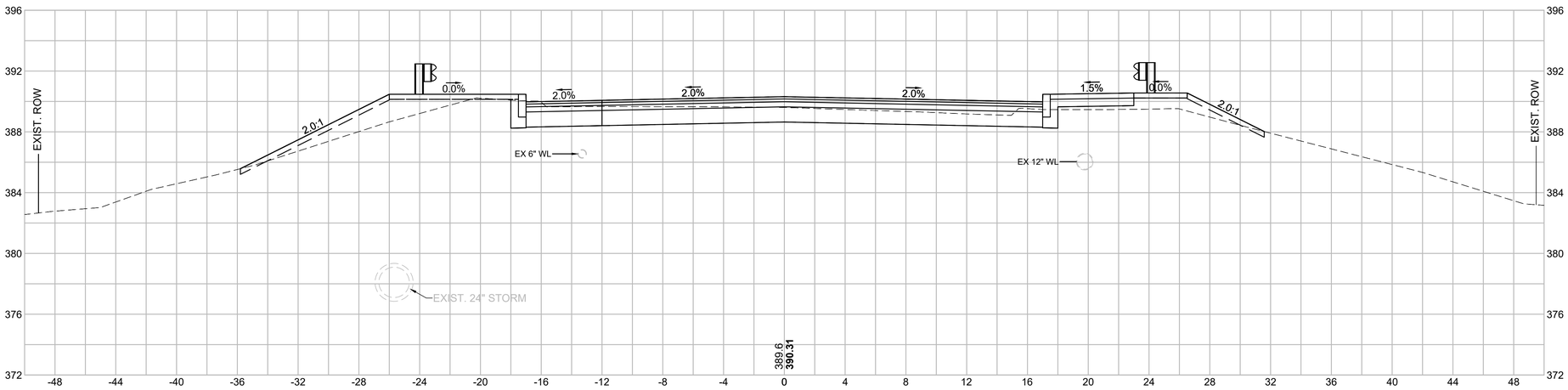

HOR. SCALE IN FEET
4 0 4 8
4 0 4 8
VER. SCALE IN FEET

605126_HD_X-SECTIONS.DWG Plotted on 19-Aug-22 1:10 PM

WARE
PALMER ROAD (ROUTE 32) OVER WARE RIVER
BRIDGE NO. W-05-015

STATE	FED. AID PROJ. NO.	SHEET NO.	TOTAL SHEETS
MA	STP(BR-OFF)-003S(606)X	108	125
PROJECT FILE NO.	605126		

CROSS SECTIONS
PALMER ROAD

28+50

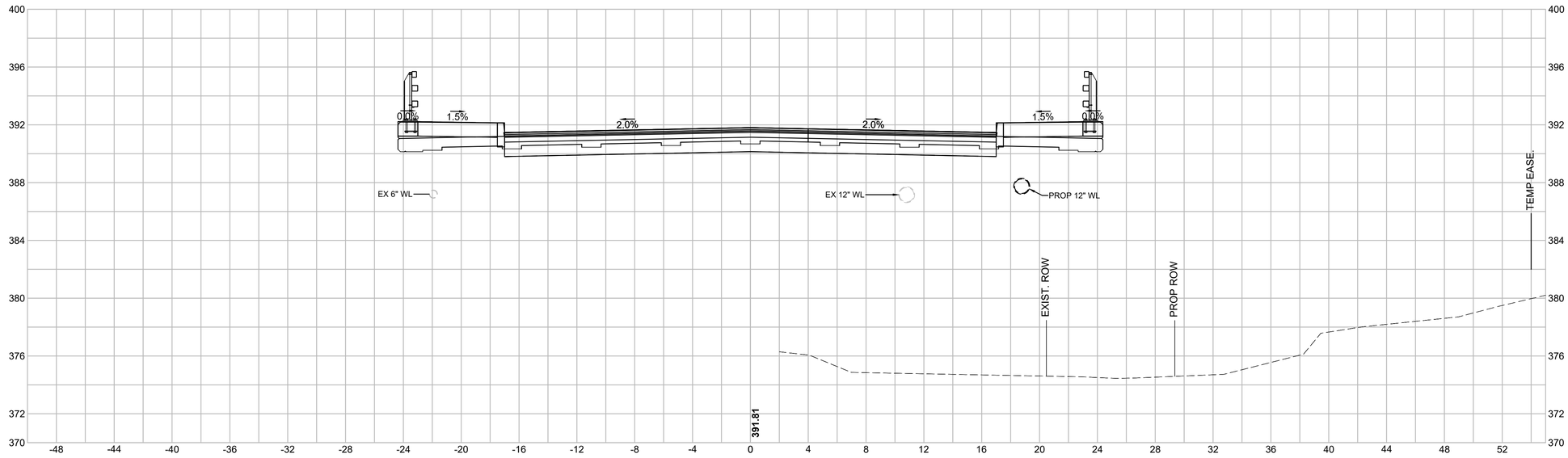

Material(s) at Station 28+00.00	
Material Name	Area
CUT	26.741 SF
FILL	314.697 SF

28+00

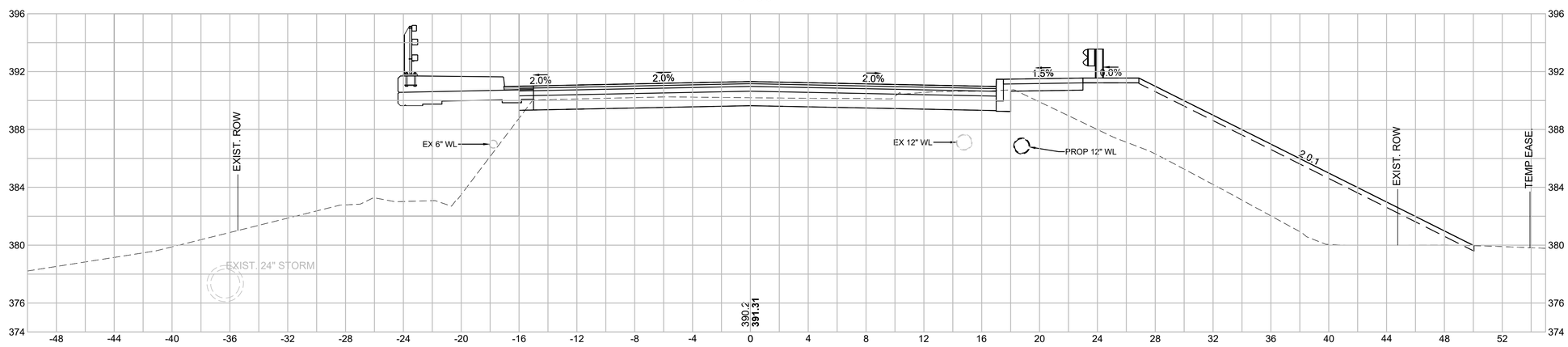

HOR. SCALE IN FEET
4 0 4 8
4 0 4 8
VER. SCALE IN FEET

605126_HD_X-SECTIONS.DWG Plotted on 19-Aug-22 1:10 PM

WARE
PALMER ROAD (ROUTE 32) OVER WARE RIVER
BRIDGE NO. W-05-015

STATE	FED. AID PROJ. NO.	SHEET NO.	TOTAL SHEETS
MA	STP(BR-OFF)-003S(606)X	109	125
PROJECT FILE NO.	605126		

CROSS SECTIONS
PALMER ROAD

605126_HD_X-SECTIONS.DWG Plotted on 19-Aug-22 1:10 PM

29+50

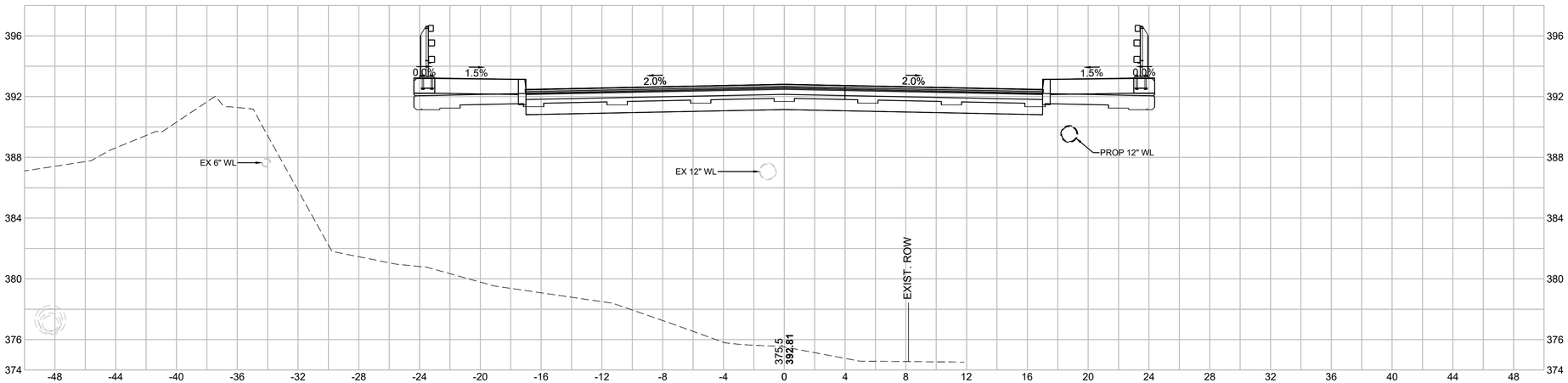

29+00

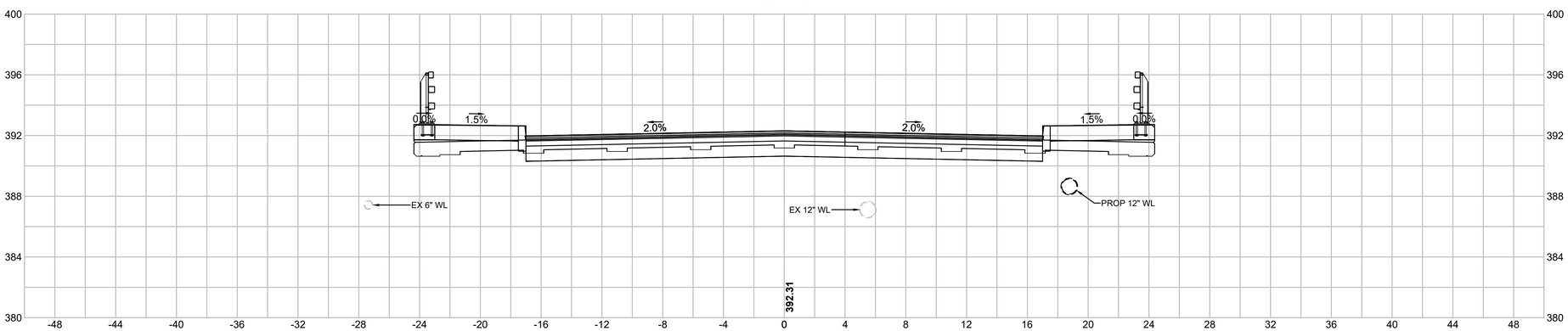

HOR. SCALE IN FEET
4 0 4 8
4 0 4 8
VER. SCALE IN FEET

WARE
PALMER ROAD (ROUTE 32) OVER WARE RIVER
BRIDGE NO. W-05-015

STATE	FED. AID PROJ. NO.	SHEET NO.	TOTAL SHEETS
MA	STP(BR-OFF)-003S(606)X	110	125
PROJECT FILE NO.	605126		

CROSS SECTIONS
PALMER ROAD

Material(s) at Station 30+28.80	
Material Name	Area
CUT	10.706 SF
FILL	348.931 SF

30+28.80

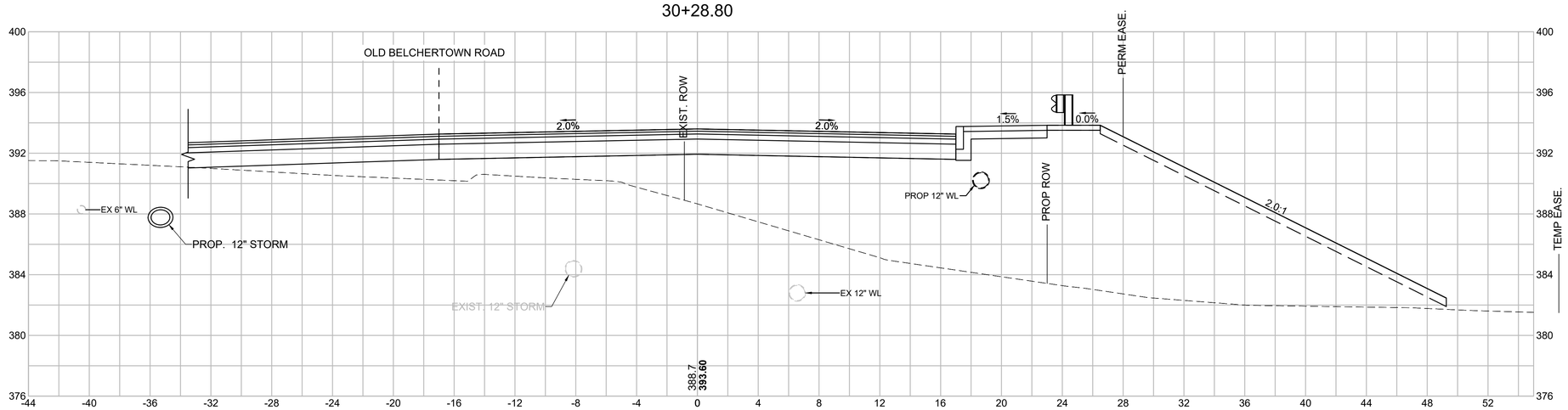

Material(s) at Station 30+00.00	
Material Name	Area
CUT	0.000 SF
FILL	405.025 SF

30+00

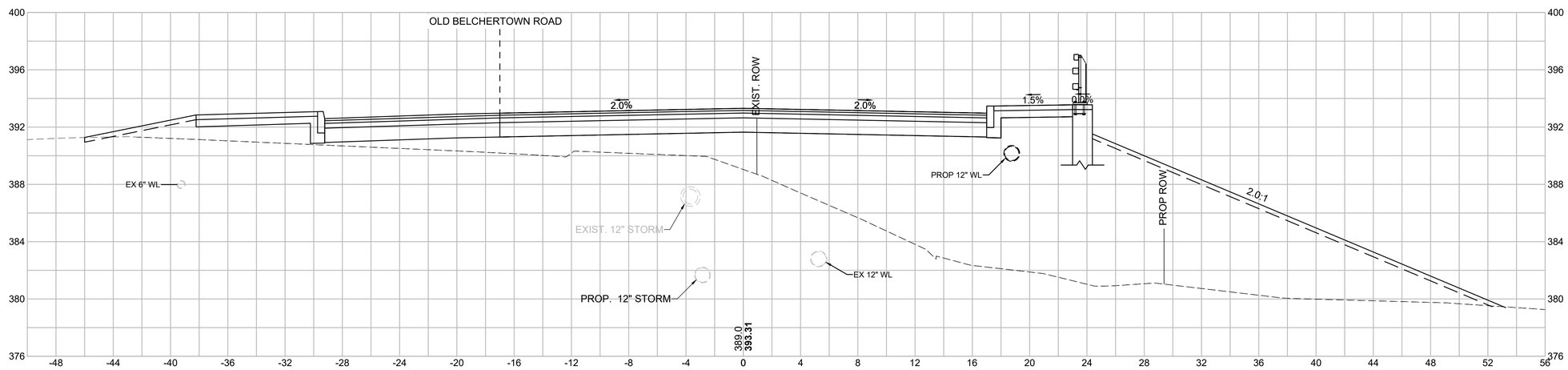

HOR. SCALE IN FEET
4 0 4 8
4 0 4 8
VER. SCALE IN FEET

605126_HD_X-SECTIONS.DWG Plotted on 19-Aug-22 1:10 PM

WARE
PALMER ROAD (ROUTE 32) OVER WARE RIVER
BRIDGE NO. W-05-015

STATE	FED. AID PROJ. NO.	SHEET NO.	TOTAL SHEETS
MA	STP(BR-OFF)-003S(606)X	111	125
PROJECT FILE NO.	605126		

CROSS SECTIONS
PALMER ROAD

Materials(s) at Station 31+00.00	
Material Name	Area
CUT	105.876
FILL	282.068

31+00

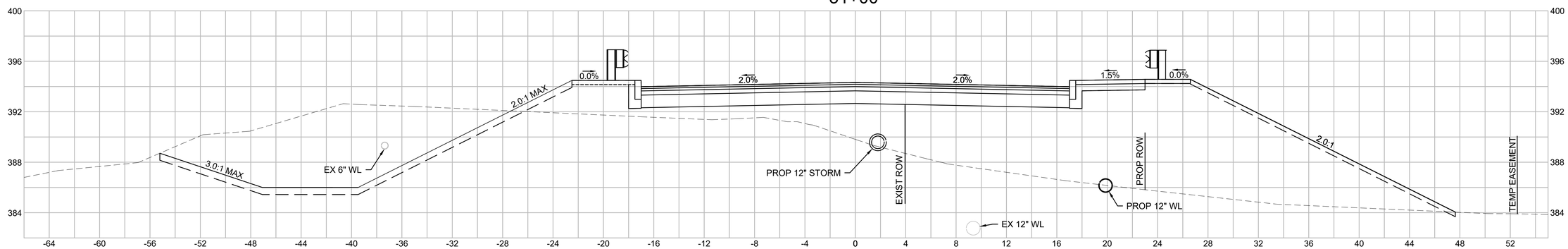

Material(s) at Station 30+50.00	
Material Name	Area
CUT	2.211 SF
FILL	331.971 SF

30+50

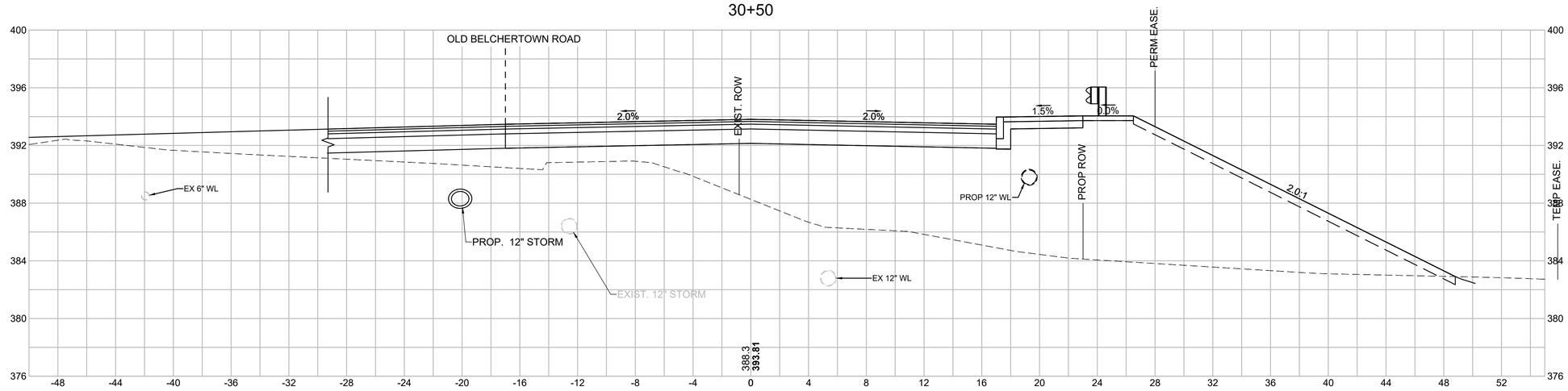

HOR. SCALE IN FEET
4 0 4 8
4 0 4 8
VER. SCALE IN FEET

605126_HD_X-SECTIONS.DWG Plotted on 19-Aug-22 1:10 PM

WARE
PALMER ROAD (ROUTE 32) OVER WARE RIVER
BRIDGE NO. W-05-015

STATE	FED. AID PROJ. NO.	SHEET NO.	TOTAL SHEETS
MA	STP(BR-OFF)-003S(606)X	112	125
PROJECT FILE NO.	605126		

CROSS SECTIONS
PALMER ROAD

Material(s) at Station 32+00.00	
Material Name	Area
CUT	3.465 SF
FILL	208.229 SF

32+00

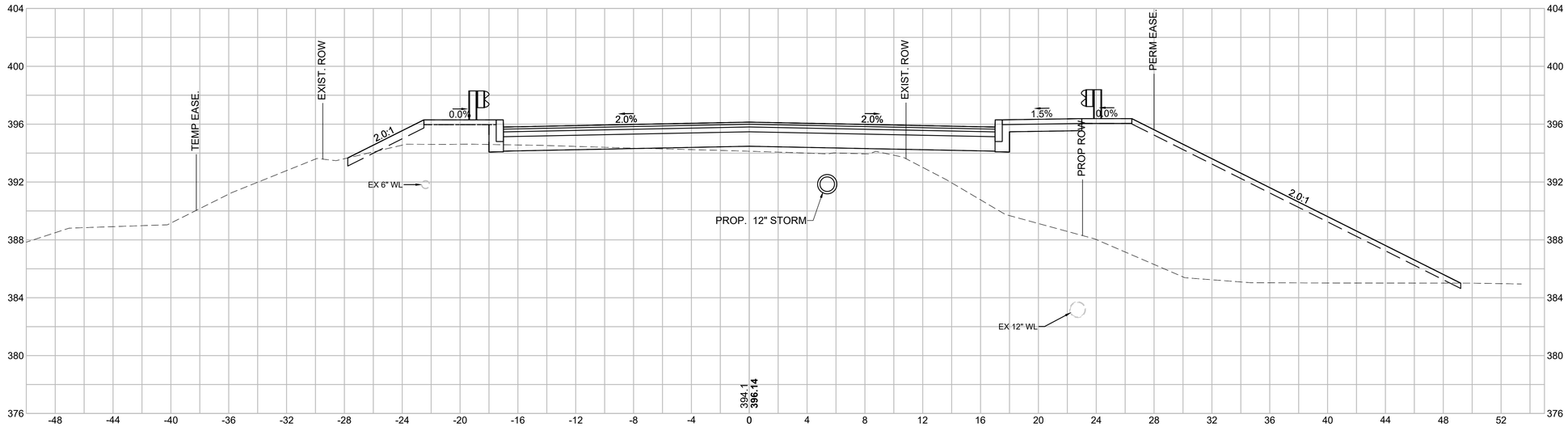

Material(s) at Station 31+50.00	
Material Name	Area
CUT	3.041 SF
FILL	276.448 SF

31+50

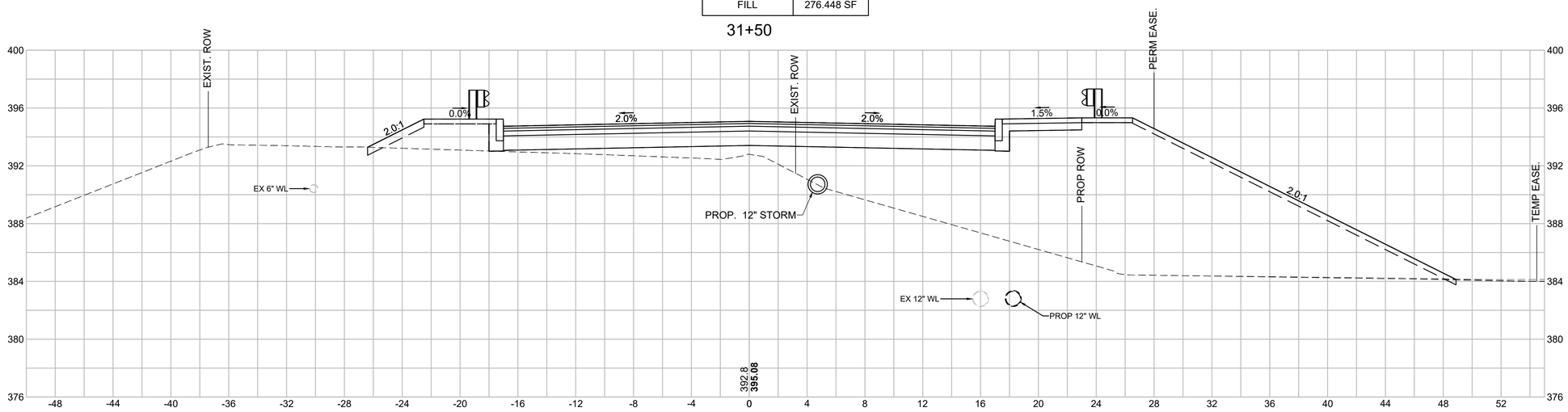

HOR. SCALE IN FEET
4 0 4 8
4 0 4 8
VER. SCALE IN FEET

605126_HD_X-SECTIONS.DWG Plotted on 19-Aug-22 1:10 PM

WARE
PALMER ROAD (ROUTE 32) OVER WARE RIVER
BRIDGE NO. W-05-015

STATE	FED. AID PROJ. NO.	SHEET NO.	TOTAL SHEETS
MA	STP(BR-OFF)-003S(606)X	113	125
PROJECT FILE NO.	605126		

CROSS SECTIONS
PALMER ROAD

605126_HD_X-SECTIONS.DWG Plotted on 19-Aug-22 1:10 PM

Material(s) at Station 33+00.00	
Material Name	Area
CUT	23.391 SF
FILL	13.049 SF

33+00

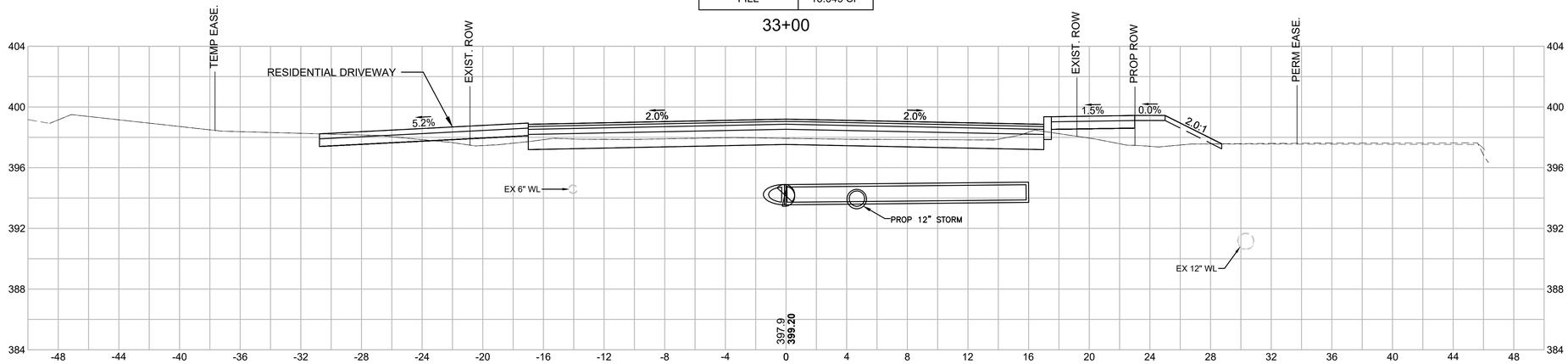

Material(s) at Station 32+50.00	
Material Name	Area
CUT	7.889 SF
FILL	149.953 SF

32+50

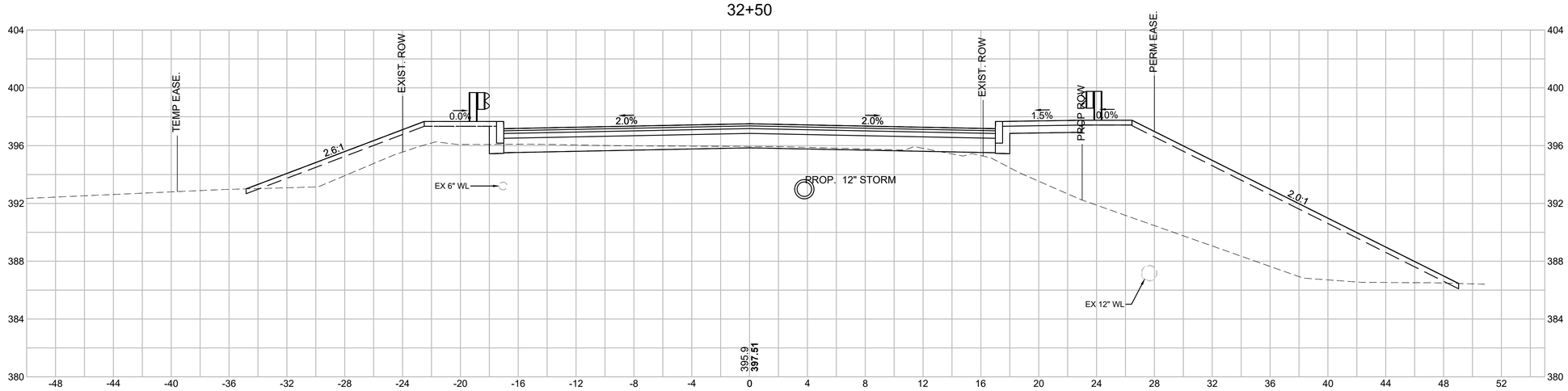

HOR. SCALE IN FEET
4 0 4 8
4 0 4 8
VER. SCALE IN FEET

WARE
PALMER ROAD (ROUTE 32) OVER WARE RIVER
BRIDGE NO. W-05-015

STATE	FED. AID PROJ. NO.	SHEET NO.	TOTAL SHEETS
MA	STP(BR-OFF)-003S(606)X	114	125
PROJECT FILE NO.	605126		

CROSS SECTIONS
PALMER ROAD

605126_HD_X-SECTIONS.DWG Plotted on 19-Aug-22 1:10 PM

Material(s) at Station 34+00.00	
Material Name	Area
CUT	109.888 SF
FILL	0.000 SF

34+00

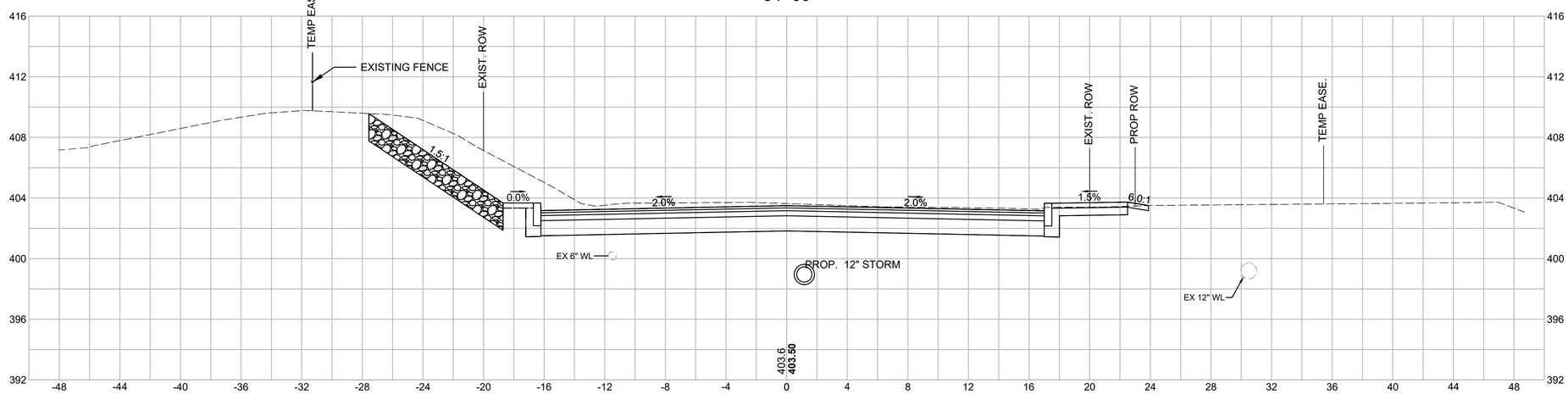

Material(s) at Station 33+50.00	
Material Name	Area
CUT	57.729 SF
FILL	1.207 SF

33+50

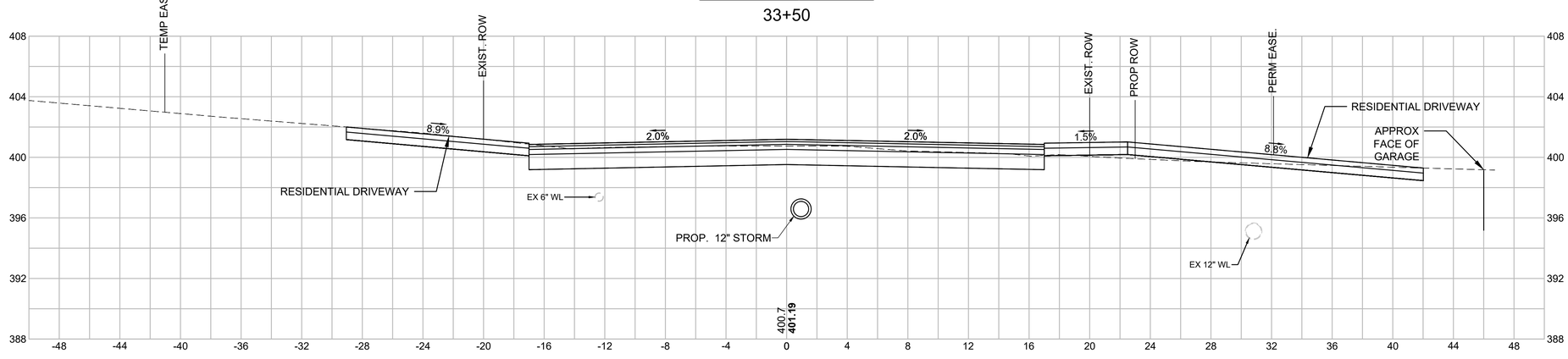

HOR. SCALE IN FEET
4 0 4 8
4 0 4 8
VER. SCALE IN FEET

WARE
PALMER ROAD (ROUTE 32) OVER WARE RIVER
BRIDGE NO. W-05-015

STATE	FED. AID PROJ. NO.	SHEET NO.	TOTAL SHEETS
MA	STP(BR-OFF)-003S(606)X	115	125
PROJECT FILE NO.	605126		

CROSS SECTIONS
PALMER ROAD

Material(s) at Station 34+80.00	
Material Name	Area
CUT	127.649 SF
FILL	0.000 SF

34+80

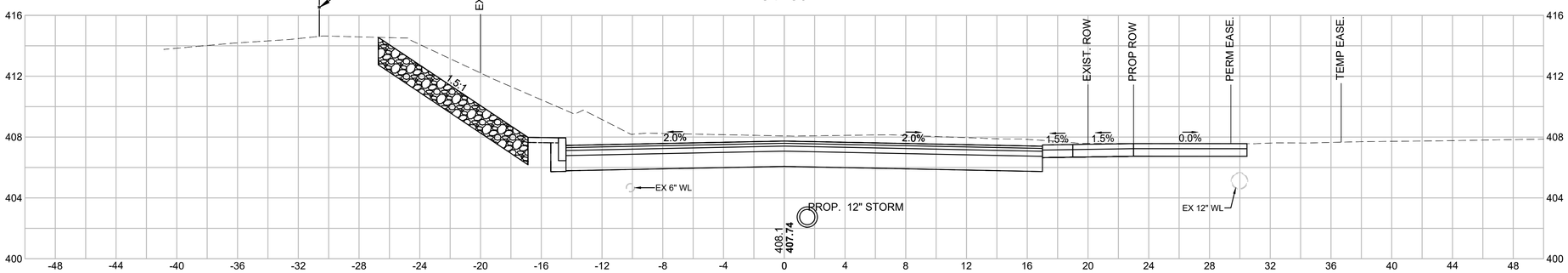

Material(s) at Station 34+50.00	
Material Name	Area
CUT	119.496 SF
FILL	0.000 SF

34+50

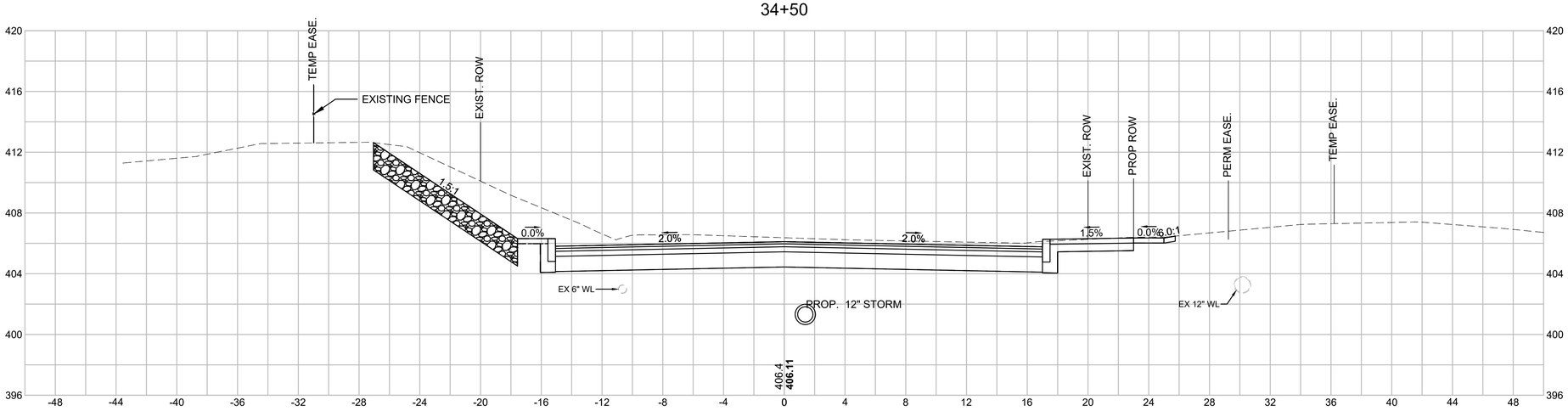

HOR. SCALE IN FEET
4 0 4 8
4 0 4 8
VER. SCALE IN FEET

605126_HD_X-SECTIONS.DWG Plotted on 19-Aug-22 1:10 PM

WARE
PALMER ROAD (ROUTE 32) OVER WARE RIVER
BRIDGE NO. W-05-015

STATE	FED. AID PROJ. NO.	SHEET NO.	TOTAL SHEETS
MA	STP(BR-OFF)-003S(606)X	116	125
PROJECT FILE NO.	605126		

CROSS SECTIONS
PALMER ROAD

Material(s) at Station 35+50.00	
Material Name	Area
CUT	157.257 SF
FILL	0.000 SF

35+50

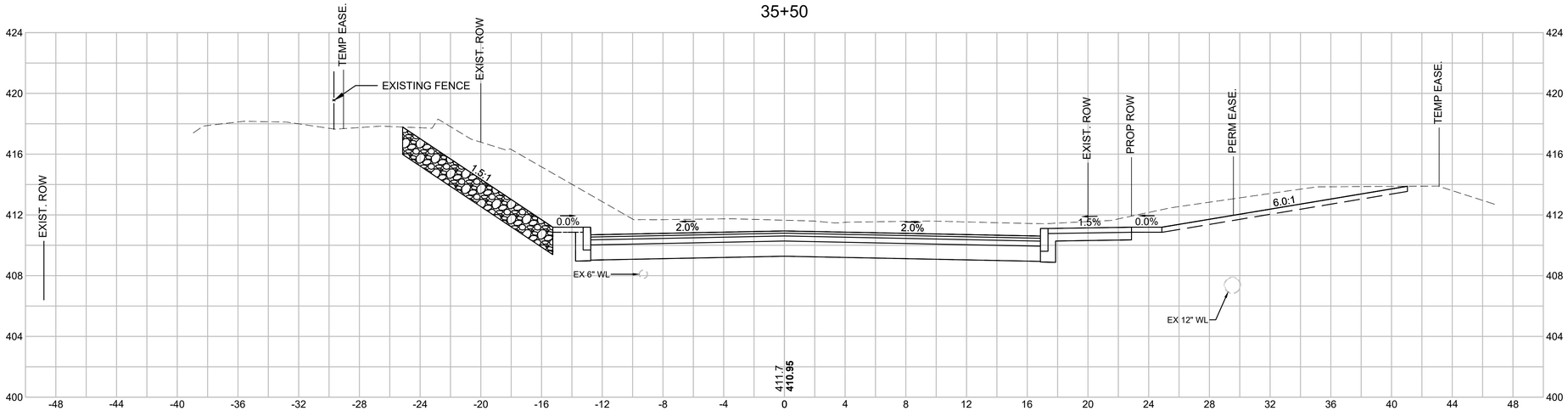

Material(s) at Station 35+00.00	
Material Name	Area
CUT	141.774 SF
FILL	0.000 SF

35+00

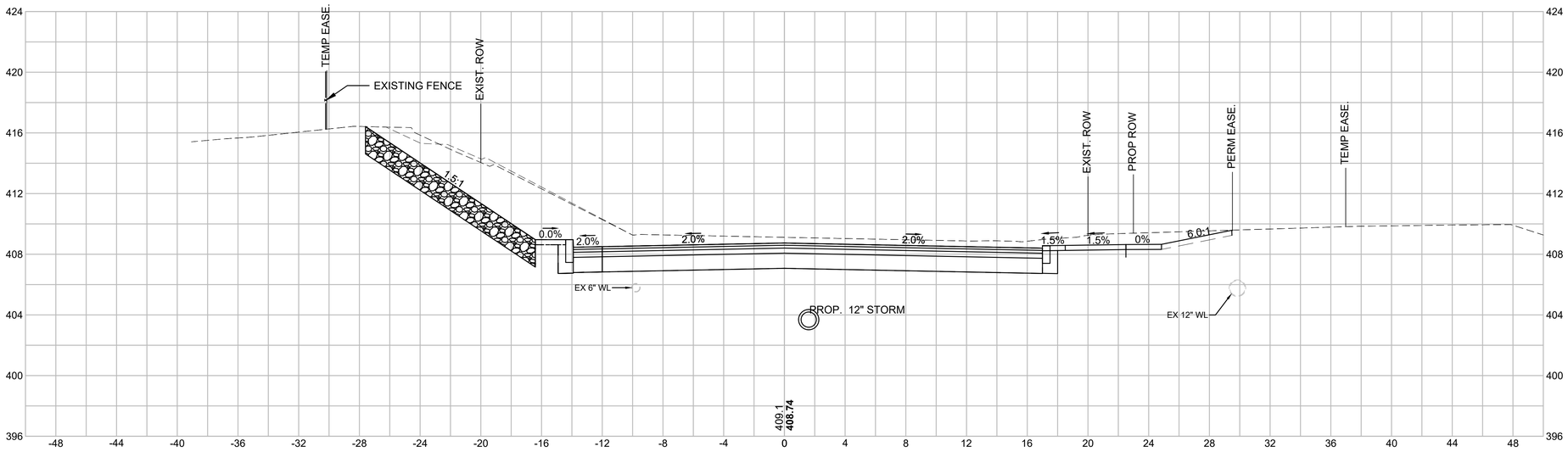

HOR. SCALE IN FEET
4 0 4 8
4 0 4 8
VER. SCALE IN FEET

605126_HD_X-SECTIONS.DWG Plotted on 19-Aug-22 1:10 PM

WARE
PALMER ROAD (ROUTE 32) OVER WARE RIVER
BRIDGE NO. W-05-015

STATE	FED. AID PROJ. NO.	SHEET NO.	TOTAL SHEETS
MA	STP(BR-OFF)-003S(606)X	117	125
PROJECT FILE NO.	605126		

CROSS SECTIONS
PALMER ROAD

605126_HD_X-SECTIONS.DWG Plotted on 19-Aug-22 1:10 PM

Material(s) at Station 36+50.00	
Material Name	Area
CUT	144.906 SF
FILL	0.000 SF

36+50

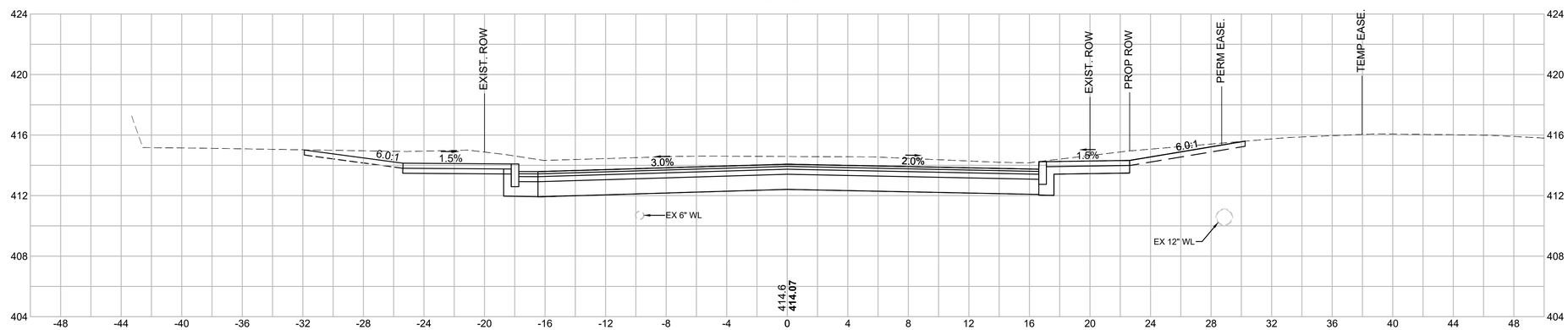

Material(s) at Station 36+00.00	
Material Name	Area
CUT	112.025 SF
FILL	0.000 SF

36+00

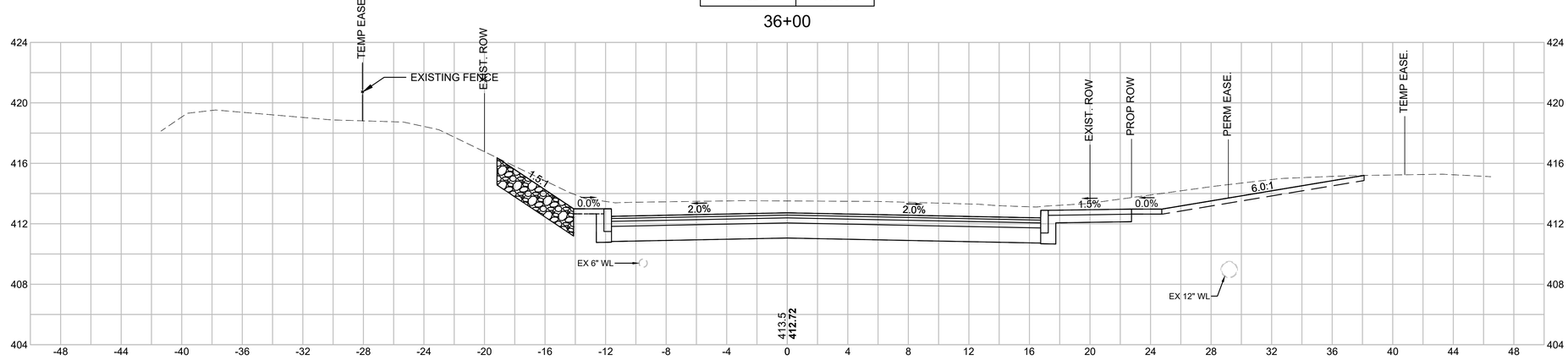

HOR. SCALE IN FEET
4 0 4 8
4 0 4 8
VER. SCALE IN FEET

WARE
PALMER ROAD (ROUTE 32) OVER WARE RIVER
BRIDGE NO. W-05-015

STATE	FED. AID PROJ. NO.	SHEET NO.	TOTAL SHEETS
MA	STP(BR-OFF)-003S(606)X	118	125
PROJECT FILE NO.	605126		

CROSS SECTIONS
PALMER ROAD

605126_HD_X-SECTIONS.DWG Plotted on 19-Aug-22 1:10 PM

Material(s) at Station 37+00.00	
Material Name	Area
CUT	66.079 SF
FILL	0.000 SF

37+00

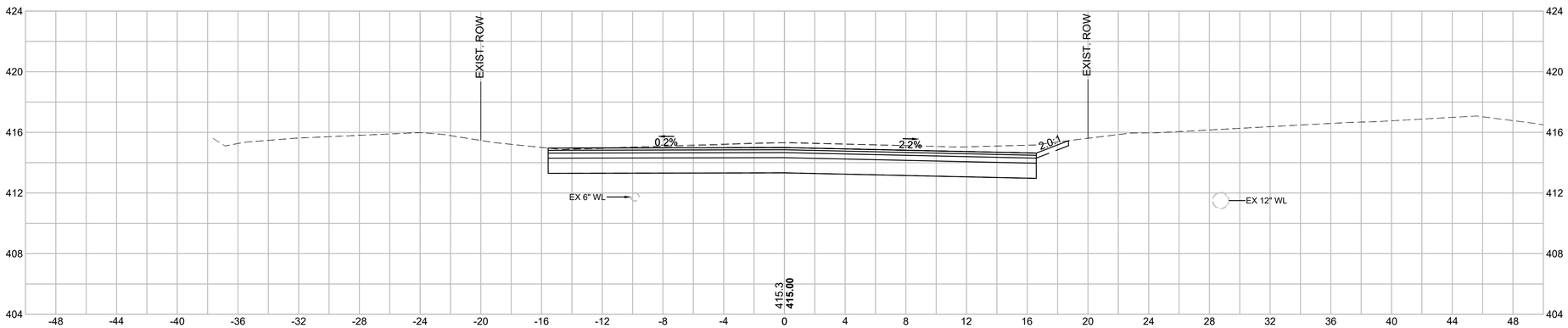

Material(s) at Station 36+80.00	
Material Name	Area
CUT	124.573 SF
FILL	0.000 SF

36+80

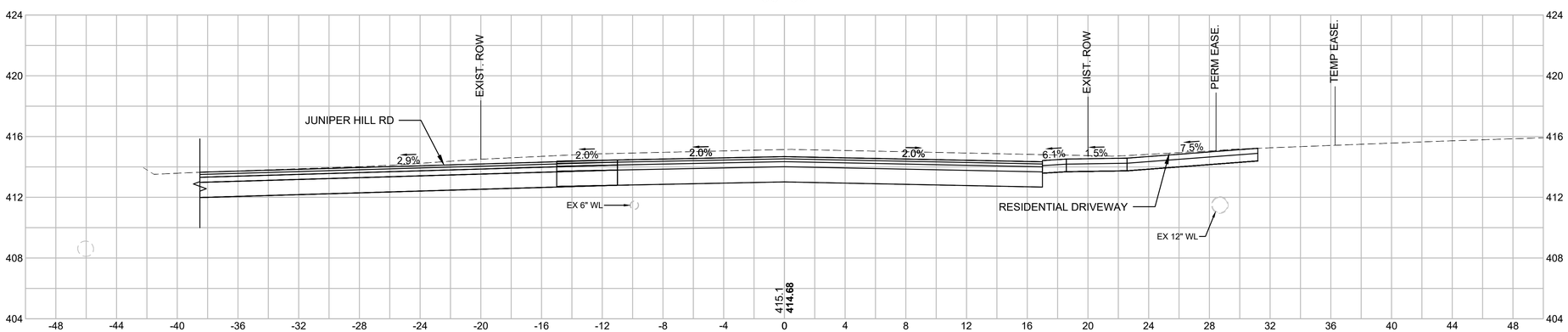

HOR. SCALE IN FEET
4 0 4 8
4 0 4 8
VER. SCALE IN FEET

WARE
PALMER ROAD (ROUTE 32) OVER WARE RIVER
BRIDGE NO. W-05-015

STATE	FED. AID PROJ. NO.	SHEET NO.	TOTAL SHEETS
MA	STP(BR-OFF)-003S(606)X	119	125
PROJECT FILE NO.	605126		

CROSS SECTIONS
PALMER ROAD

605126_HD_X-SECTIONS.DWG Plotted on 19-Aug-22 1:10 PM

38+00

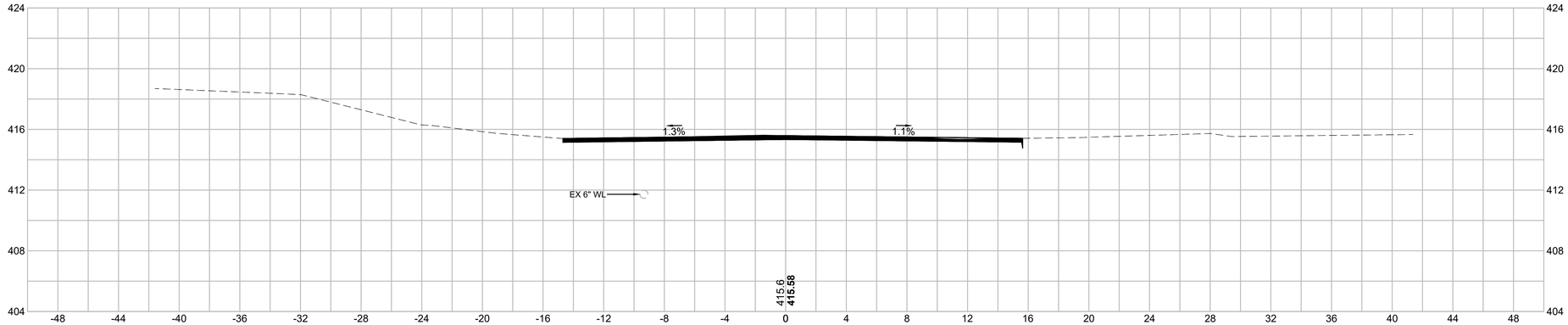

Material(s) at Station 37+50.00	
Material Name	Area
CUT	48.307 SF
FILL	0.000 SF

37+50

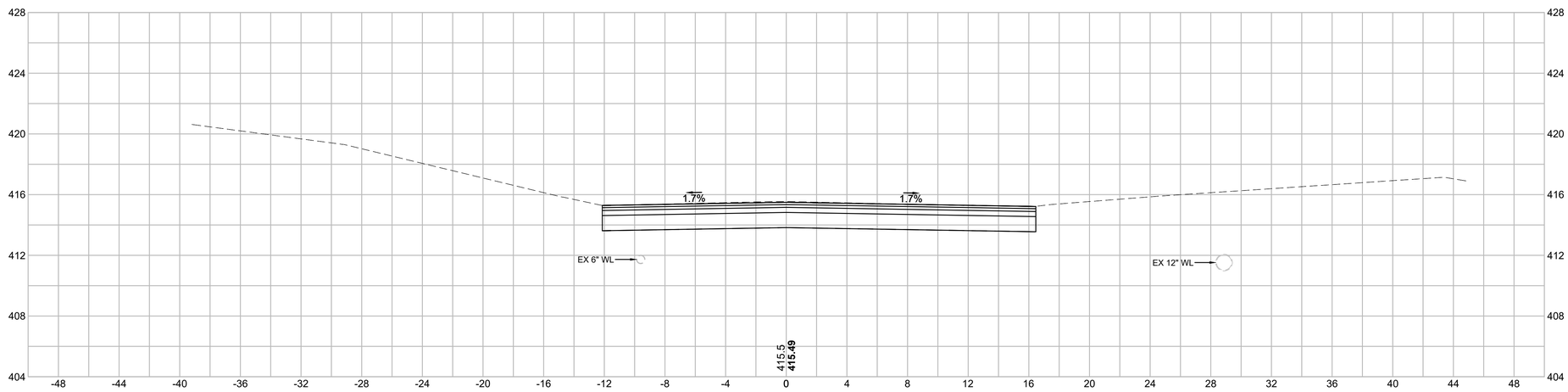

HOR. SCALE IN FEET
4 0 4 8
4 0 4 8
VER. SCALE IN FEET

WARE
PALMER ROAD (ROUTE 32) OVER WARE RIVER
BRIDGE NO. W-05-015

STATE	FED. AID PROJ. NO.	SHEET NO.	TOTAL SHEETS
MA	STP(BR-OFF)-003S(606)X	120	125
PROJECT FILE NO.	605126		

CROSS SECTIONS
PALMER ROAD

605126_HD_X-SECTIONS.DWG Plotted on 19-Aug-22 1:10 PM

38+50

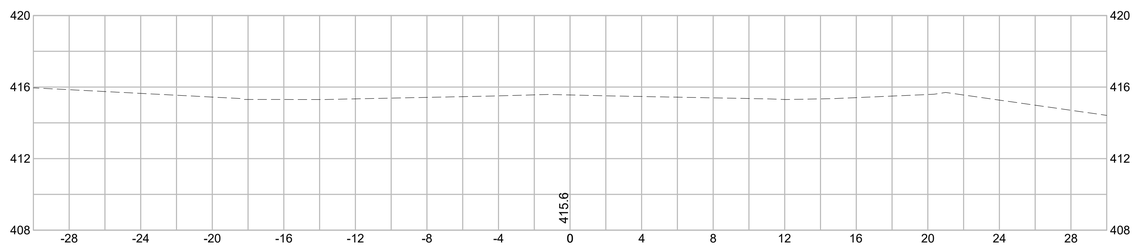

38+39.43

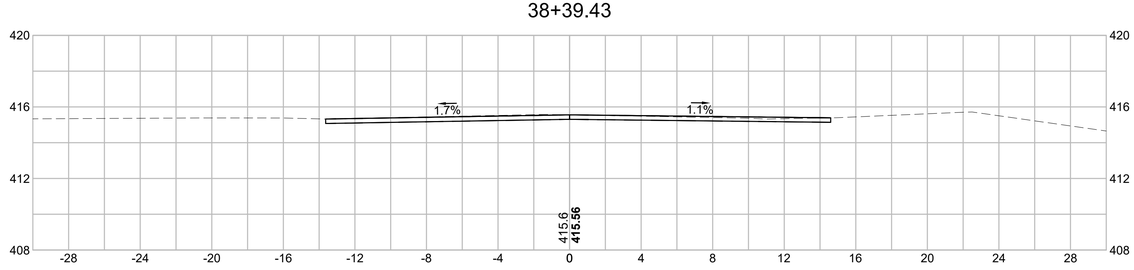

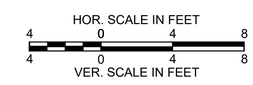

WARE
PALMER ROAD (ROUTE 32) OVER WARE RIVER
BRIDGE NO. W-05-015

STATE	FED. AID PROJ. NO.	SHEET NO.	TOTAL SHEETS
MA	STP(BR-OFF)-003S(606)X	121	125
PROJECT FILE NO.	605126		

CROSS SECTIONS
OLD BELCHERTOWN ROAD

605126_HD_X-SECTIONS.DWG Plotted on 19-Aug-22 1:10 PM

10+67.41

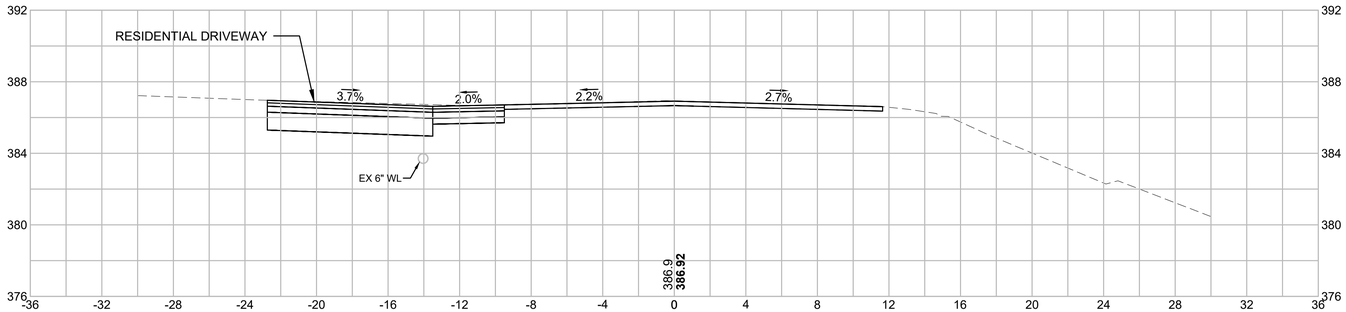

Material(s) at Station 10+67.41	
Material Name	Area
CUT	25.429 SF
FILL	0.000 SF

10+50

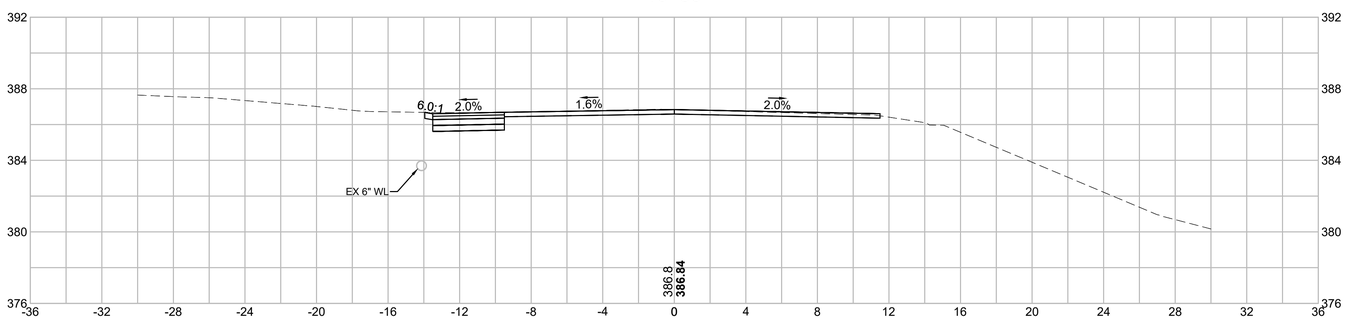

Material(s) at Station 10+50.00	
Material Name	Area
CUT	9.137 SF
FILL	0.000 SF

10+00

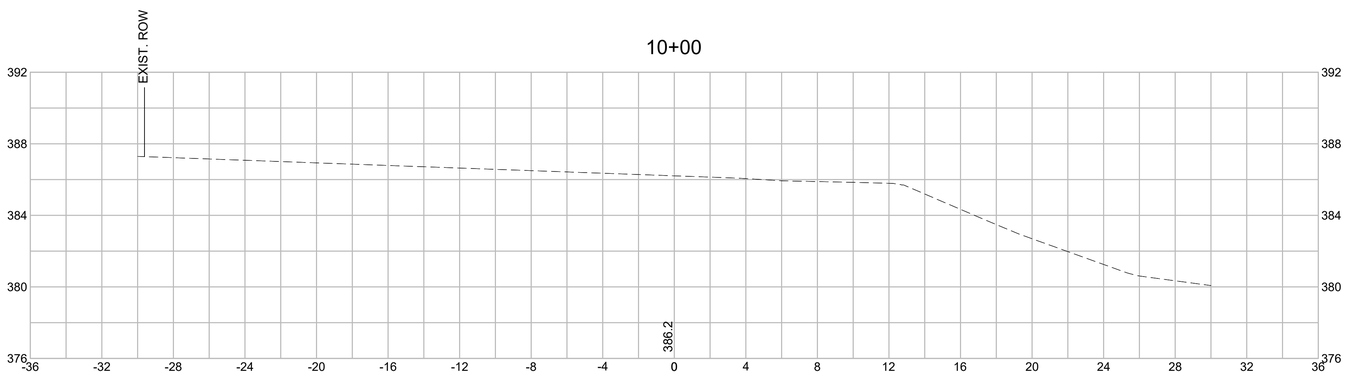

Material(s) at Station 10+00.00	
Material Name	Area
CUT	0.000 SF
FILL	0.000 SF

HOR. SCALE IN FEET
4 0 4 8
4 0 4 8
VER. SCALE IN FEET

WARE
PALMER ROAD (ROUTE 32) OVER WARE RIVER
BRIDGE NO. W-05-015

STATE	FED. AID PROJ. NO.	SHEET NO.	TOTAL SHEETS
MA	STP(BR-OFF)-003S(606)X	122	125
PROJECT FILE NO.	605126		

CROSS SECTIONS
OLD BELCHERTOWN ROAD

12+00

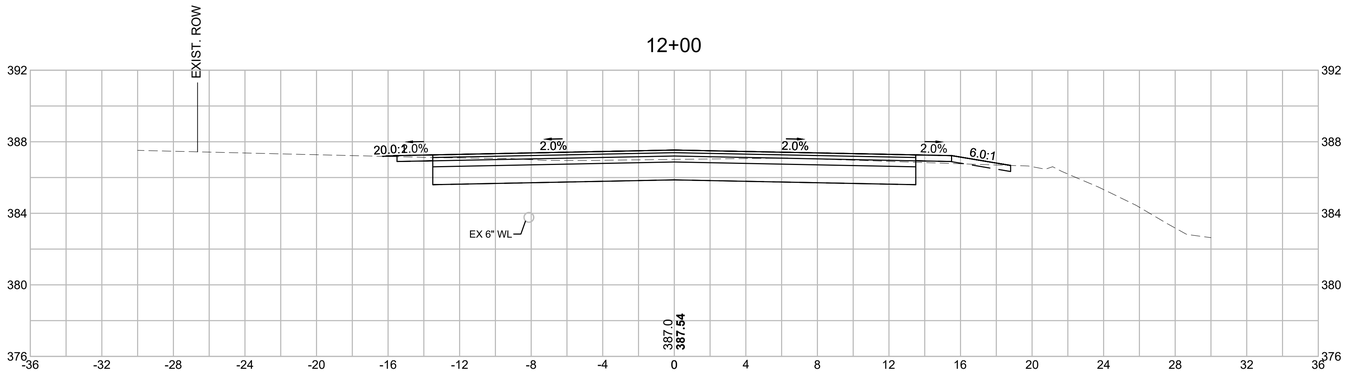

Material(s) at Station 12+00.00	
Material Name	Area
CUT	36.589 SF
FILL	14.652 SF

11+50

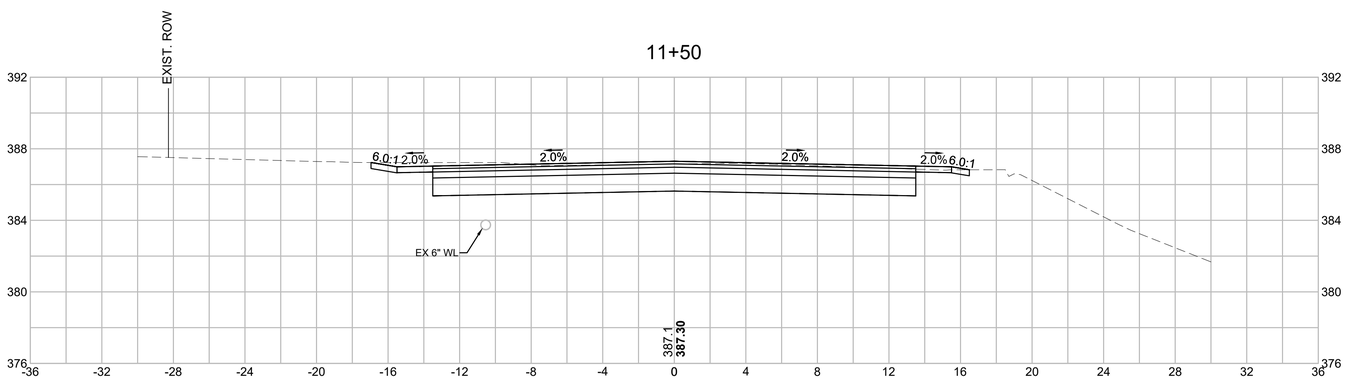

Material(s) at Station 11+50.00	
Material Name	Area
CUT	45.626 SF
FILL	0.000 SF

11+00

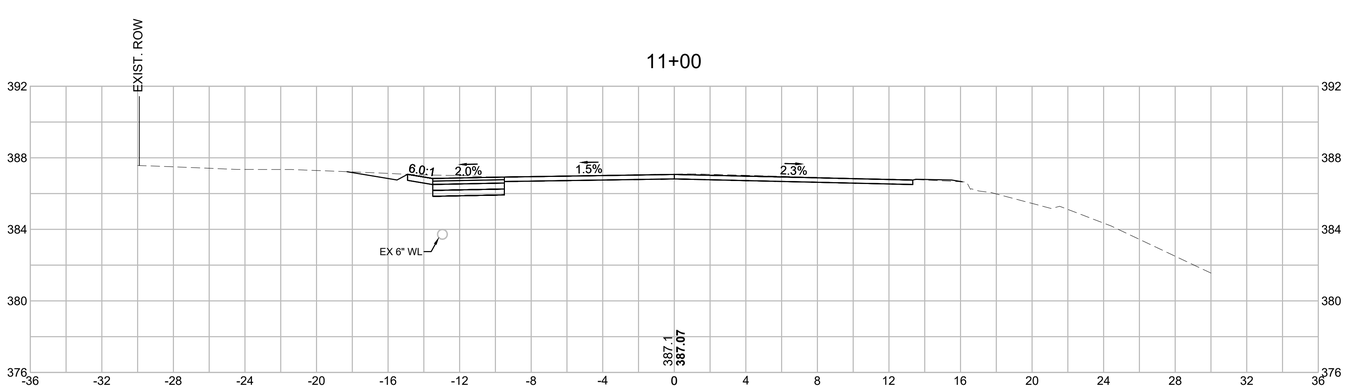

Material(s) at Station 11+00.00	
Material Name	Area
CUT	12.434 SF
FILL	0.000 SF

HOR. SCALE IN FEET
4 0 4 8
4 0 4 8
VER. SCALE IN FEET

605126_HD_X-SECTIONS.DWG Plotted on 19-Aug-22 1:10 PM

WARE
PALMER ROAD (ROUTE 32) OVER WARE RIVER
BRIDGE NO. W-05-015

STATE	FED. AID PROJ. NO.	SHEET NO.	TOTAL SHEETS
MA	STP(BR-OFF)-003S(606)X	123	125
PROJECT FILE NO.	605126		

CROSS SECTIONS
OLD BELCHERTOWN ROAD

605126_HD_X-SECTIONS.DWG Plotted on 19-Aug-22 1:10 PM

13+00

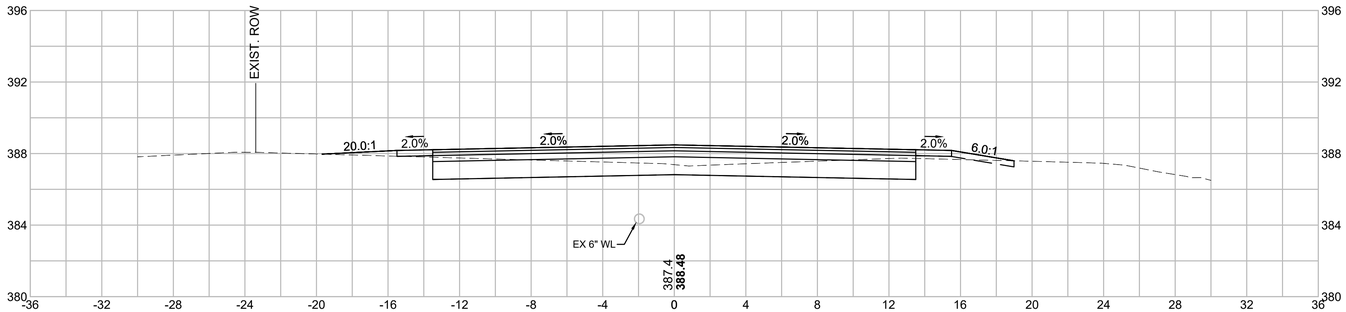

Material(s) at Station 13+00.00	
Material Name	Area
CUT	27.530 SF
FILL	1.187 SF

12+50

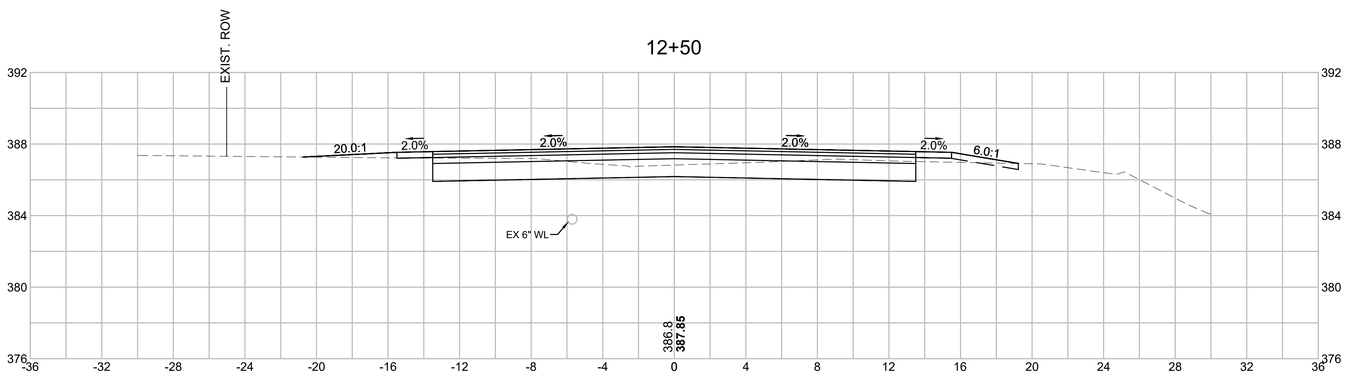

Material(s) at Station 12+50.00	
Material Name	Area
CUT	27.690 SF
FILL	7.551 SF

12+17.73

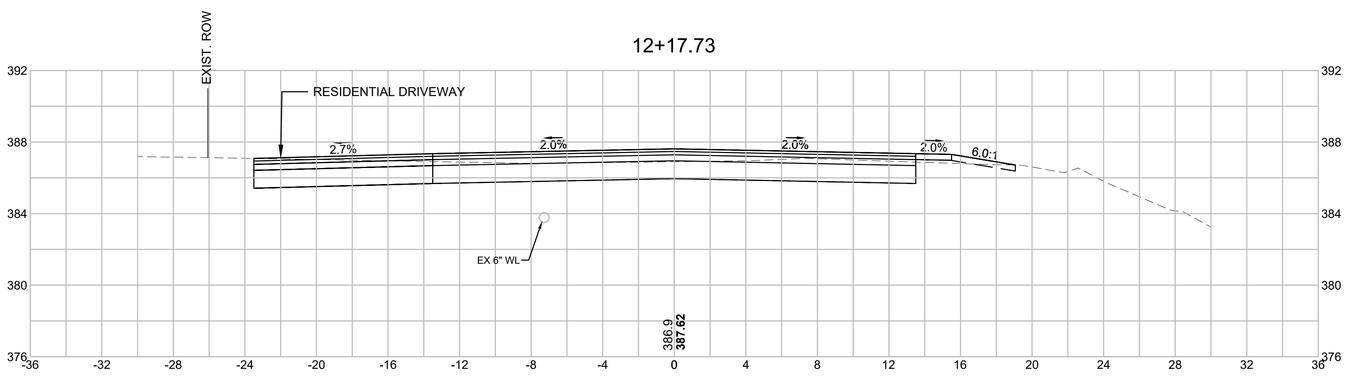

Material(s) at Station 12+17.73	
Material Name	Area
CUT	45.794 SF
FILL	9.177 SF

HOR. SCALE IN FEET
4 0 4 8
4 0 4 8
VER. SCALE IN FEET

WARE
PALMER ROAD (ROUTE 32) OVER WARE RIVER
BRIDGE NO. W-05-015

STATE	FED. AID PROJ. NO.	SHEET NO.	TOTAL SHEETS
MA	STP(BR-OFF)-003S(606)X	124	125
PROJECT FILE NO.	605126		

CROSS SECTIONS
OLD BELCHERTOWN ROAD

605126_HD_X-SECTIONS.DWG Plotted on 19-Aug-22 1:10 PM

14+00

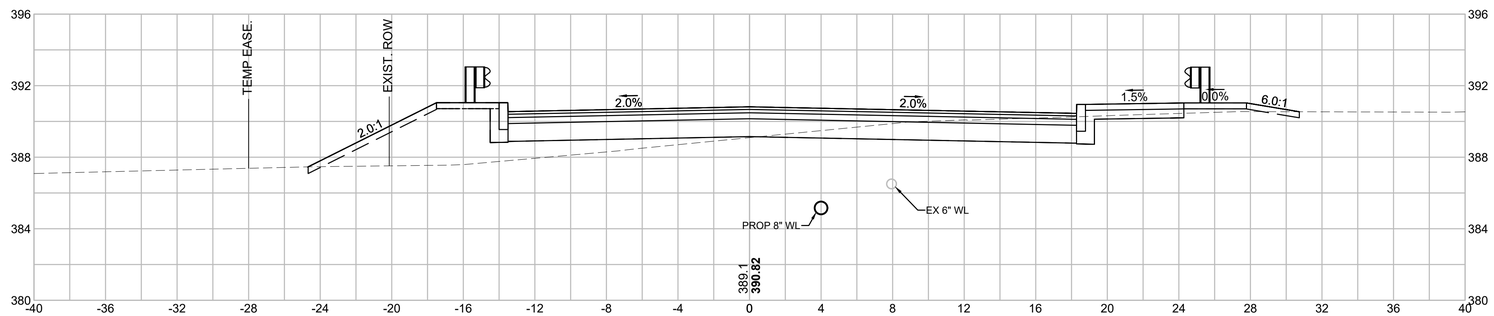

Material(s) at Station 14+00.00	
Material Name	Area
CUT	20.203 SF
FILL	29.031 SF

13+50

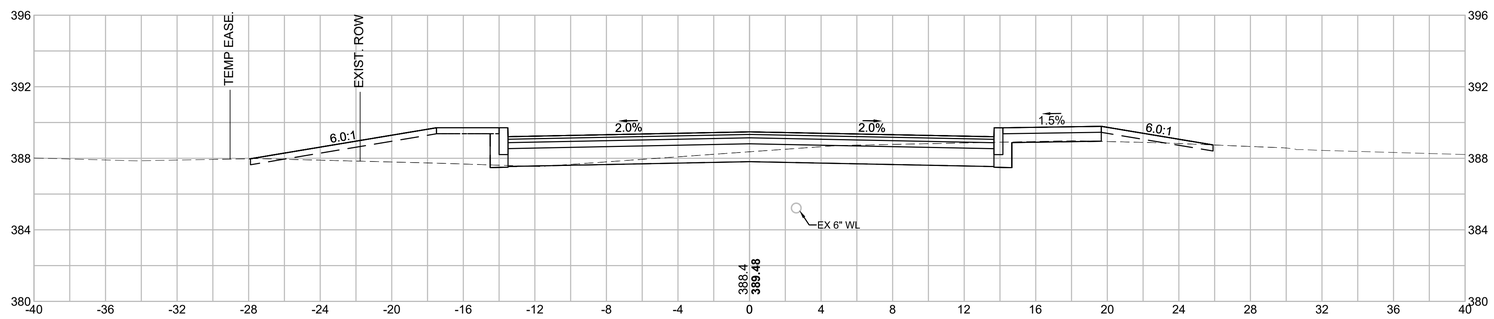

Material(s) at Station 13+50.00	
Material Name	Area
CUT	19.657 SF
FILL	13.022 SF

13+22.31

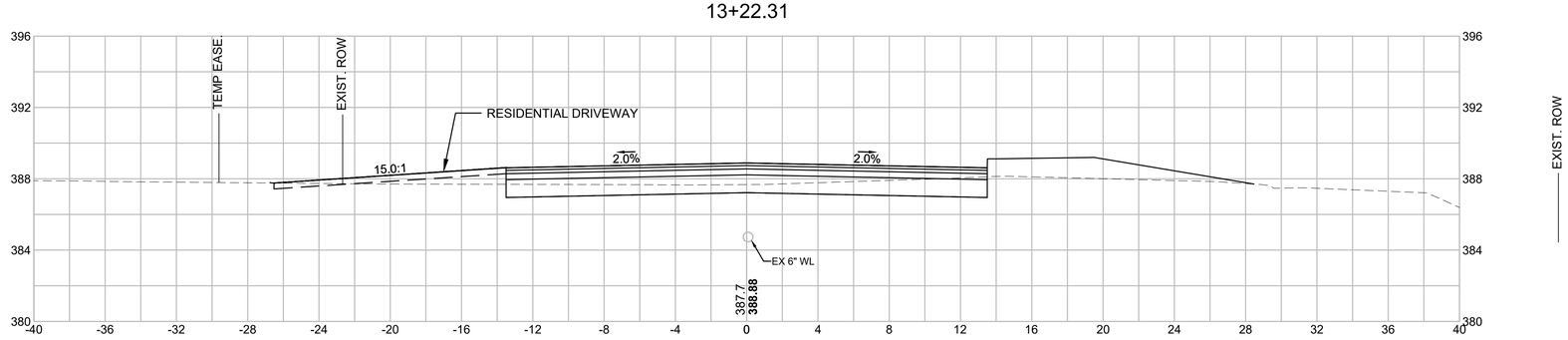

Material(s) at Station 13+22.31	
Material Name	Area
CUT	20.370 SF
FILL	10.016 SF

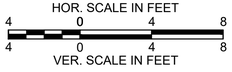

WARE
PALMER ROAD (ROUTE 32) OVER WARE RIVER
BRIDGE NO. W-05-015

STATE	FED. AID PROJ. NO.	SHEET NO.	TOTAL SHEETS
MA	STP(BR-OFF)-003S(606)X	125	125
PROJECT FILE NO.	605126		

CROSS SECTIONS
OLD BELCHERTOWN ROAD

605126_HD_X-SECTIONS.DWG Plotted on 19-Aug-22 1:10 PM

14+50

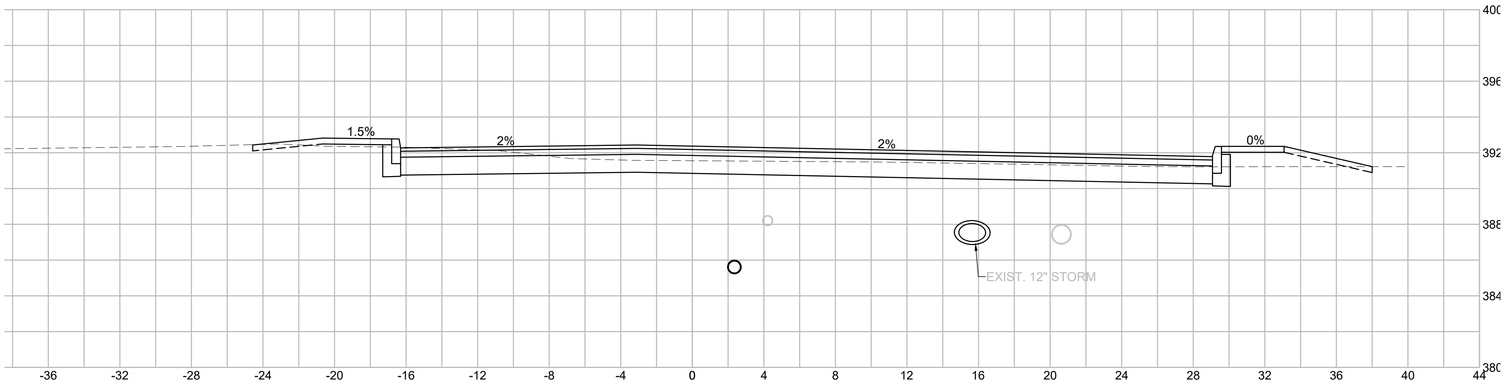

HOR. SCALE IN FEET
4 0 4 8
4 0 4 8
VER. SCALE IN FEET