PROJECT:
West Parish Filters Water Treatment Plant
1515 Granville Road
Westfield, MA 01085
Project No. 24-51

ADDENDUM NO. 5 04/23/2024

Posted: 04/23/2024 at 6:49PM EDT

Awarding Authority/Owner:
Springfield Water and Sewer Commission
250 M Street Extension
Agawam, MA 01001

Reference Contract Documents (drawings and specifications) dated 02/26/2024

The attention of Bidders submitting proposals for the above subject project is called to the following addendum to the specifications and drawings. The items set forth herein, whether of omission, addition, substitution, or clarifications are all to be included in and form a part of the proposal submitted.

THE NUMBER OF THIS ADDENDUM (**5**) MUST BE ENTERED IN THE APPROPRIATE SPACE "B" PROVIDED AFTER THE WORD "NUMBERS" OF THE CONTRACT FORM ENTITLED "FORM FOR GENERAL BID," AND IN SPACE "B" OF THE "FORM FOR SUB-BID."

BID DOCUMENT MODIFICATIONS ARE AS FOLLOWS.

Other Modifications / Attachments:

The following attachment includes additional modifications, clarifications and/or provisions not included in the items above in this Addendum.
See document at the end of document.

All other of the portions of the Contract Documents remain **unchanged**. Please be reminded to acknowledge this Addendum on the bid forms.

ATTACHMENTS

24-51 Addendum No. 5.pdf

--- End of Addendum No. **5** ---

SPRINGFIELD WATER AND SEWER COMMISSION

WEST PARISH WATER TREATMENT PLANT

SWSC BID NO. 24-51

ADDENDUM NO. 5

TO ALL CONTRACTORS ESTIMATING:

Bidders are hereby informed that plans and specifications for the above-mentioned contract are modified, corrected, and/or supplemented as follows, and that Addendum No. 5 becomes a part of the Contract Documents and consists of Item Nos. 5-1 through 5-162.

ANNOUCEMENTS (THESE ITEMS NOT TO BECOME PART OF THE CONTRACT DOCUMENTS AND ARE FOR INFORMATION ONLY

The sign in sheet for the non-mandatory Pre-Bid Site Visit held on April 9, 2024 at the West Parish Filters Water Treatment Plant located at 1515 Granville Road, Westfield, MA is included as Attachment A.

DRAWING CHANGES

ITEM 5-1: CONTRACT DRAWINGS

Delete the following drawing sheets in their entirety and replace with the attached drawings in Attachment No. B:

- G-003, Index Of Drawings – Sheet 2
- C-101, Existing Conditions With Yard Piping Demolition Plan – Sheet 1
- C-103, Existing Conditions With Yard Piping Demolition Plan – Sheet 3
- C-107, Existing Conditions With Yard Piping Demolition Plan – Sheet 7
- C-111, Demolition Plan – Sheet 1
- C-144, Yard Piping Plan – Sheet 4
- C-217, Stormwater Details – Sheet 1
- C-218, Stormwater Details – Sheet 2
- C-310, Steel Pipe Details – Sheet 1
- C-314, Site Details – Sheet 1
- L-104, Planting Plan – Sheet 4
- A-002, Architectural Notes – Sheet 1
- A-003, Architectural Notes – Sheet 2
- A-004, Architectural Notes – Sheet 3
- A-005, Architectural Roof Details
- A-006, Architectural Roof Details
- A-007, Architectural Exterior Wall Details
- A-014, Architectural Door Schedule
- A-015, Architectural Door Details
- A-0100, Water Treatment Building Architectural Building Code Summary
- A-0106, Dewatering Building Architectural Building Code Summary
- A-1301, Water Treatment Building Architectural Plan At El 485.00 – Administration Area 1
- A-1303, Water Treatment Building Architectural Enlarged Control Room And Pantry Plan At El 485.00 – Administration Area
- A-1701, Water Treatment Building Architectural Building Sections – Administration Areas
- S-001, General Notes – Sheet 1
- S-002, General Notes – Sheet 2
- S-007, Standard Details – Sheet 5
- S-008, Standard Details – Sheet 6
- S-012, Standard Details – Sheet 10
- S-1101, Water Treatment Building – Plan At El 457.00 – Administration Area 1
- S-1201, Water Treatment Building – Plan At El 471.00 –

Administration Area 1

- S-1401, Water Treatment Building – Roof Plan At El 499.00 – Administration Area 1
- S-1704, Water Treatment Building – Sections And Details – Administration Area
- S-2702, Water Treatment Building – Sections – Process Area Sheet 2
- S-2704, Water Treatment Building – Sections – Process Area Sheet 4
- S-2706, Water Treatment Building – Sections – Process Area Sheet 6
- S-2714, Water Treatment Building – Sections – Process Area Sheet 14
- S-3201, Dewatering Building – Plan At El 464.50
- M-003, Standard Details – Sheet 3
- M-004, Standard Details – Sheet 4
- M-102, Details – Sheet 2
- M-104, Details – Sheet 4
- M-105, Details – Sheet 2
- H-002, Basis Of Design
- H-025, Equipment Schedules – Sheet 1
- P-003, Schedules – Sheet 2
- P-012, Water Treatment Building – Sanitary Riser Diagrams At El 471.00 – Process Area
- P-017, Dewatering Building – Sanitary Riser Diagrams At El 484.50
- P-1201, Water Treatment Building – Plan At El 471.00 – Administration Area 1
- P-1301, Water Treatment Building – Plan At El 485.00 – Administration Area 1
- P-2300, Water Treatment Building – Overall Plan At El 485.00 – Process Area
- P-2301, Water Treatment Building – Plan At El 485.00 – Process Area 1
- P-2701, Water Treatment Building – Sections – Process Area Sheet 1
- P-3301, Dewatering Building – Plan At El 484.50
- FP-002, Symbols, Abbreviations And Schedules
- FP-1301, Water Treatment Building – Enlarged Plan At El 485.00 – Administration Area 1
- FP-1350, Water Treatment Building – Sprinkler Coverage Plan At El 485.00 – Administration Areas
- FP-1601, Water Treatment Building – Enlarged Plan – Inert Gas System In It/Scada Room
- E-002, General Notes And Abbreviations
- E-003, Standard Details – Sheet 1

- E-005, Standard Details – Sheet 3
- E-008, Standard Details – Sheet 6
- E-011, Overall Existing Power And Lighting Plan
- E-012, Overall Site Plan
- E-014, Manhole, Handhole, Ductbank Schedules And Details – Sheet 1
- E-015, Manhole, Handhole, Ductbank Schedules And Details – Sheet 2
- E-017, Manhole, Handhole, Ductbank Schedules And Details – Sheet 4
- E-1101, Water Treatment Building – Power Plan At El 457.00 – Administration Area 1
- E-1121, Water Treatment Building – Lighting Plan At El 457.00 – Administration Area 1
- E-1201, Water Treatment Building – Power Plan At El 471.00 – Administration Area 1
- E-1202, Water Treatment Building – Power Plan At El 471.00 – Administration Area 2
- E-1221, Water Treatment Building – Lighting Plan At El 471.00 – Administration Area 1
- E-1222, Water Treatment Building – Lighting Plan At El 471.00 – Administration Area 2
- E-1301, Water Treatment Building – Power Plan At El 485.00 – Administration Area 1
- E-1302, Water Treatment Building – Power Plan At El 485.00 – Administration Area 2
- E-1803, Water Treatment Building – Panel Board Schedules – Administration Area Sheet 1
- E-1804, Water Treatment Building – Panel Board Schedules – Administration Area Sheet 2
- E-1805, Water Treatment Building – Panel Board Schedules – Administration Area Sheet 3
- E-1806, Water Treatment Building – Riser Diagrams – Administration Area
- E-2106, Water Treatment Building – Power Plan At El 457.00 – Process Area 6
- E-2109, Water Treatment Building – Power Plan At El 457.00 – Process Area 9
- E-2201, Water Treatment Building – Power Plan At El 471.00 – Process Area 1
- E-2204, Water Treatment Building – Power Plan At El 471.00 – Process Area 4
- E-2207, Water Treatment Building – Power Plan At El 471.00 – Process Area 7
- E-2208, Water Treatment Building – Power Plan At El 471.00 –

Process Area 8

- E-2302, Water Treatment Building – Power Plan At El 485.00 – Process Area 2
- E-2305, Water Treatment Building – Power Plan At El 485.00 – Process Area 5
- E-2309, Water Treatment Building – Power Plan At El 485.00 – Process Area 9
- E-2520, Water Treatment Building – Overall Lightning Protection Plan – Process Areas
- E-2541, Water Treatment Building – Overall Fire Alarm Plan At El 471.00 – Process Areas
- E-2542, Water Treatment Building – Overall Fire Alarm Plan At El 485.00 – Process Areas
- E-2802, Water Treatment Building – Overall Proposed Single Line Diagram – Sheet 1
- E-2811, Water Treatment Building – Switchgear Elevations
- E-2812, Water Treatment Building – Mcc Elevations – Sheet 1
- E-2815, Water Treatment Building – Fire Alarm Riser Diagrams – Process Area
- E-2820, Water Treatment Building – Panel Board Schedules – Process Area Sheet 4
- E-2821, Water Treatment Building – Panel Board Schedules – Process Area Sheet 5
- E-3201, Dewatering Building – Power Plan At El 464.50
- E-3301, Dewatering Building – Power Plan At El 484.50
- E-3520, Dewatering Building – Overall Lightning Protection Plan
- E-3701, Dewatering Building – Sections
- E-3804, Dewatering Building – Panel Board Schedules

SPECIFICATION CHANGES

ITEM 5-2: Section 00 01 10 – Table of Contents

After 21 13 13 Wet Pipe Sprinklers, insert the following:

“*21 13 19	Preaction Sprinkler System

ITEM 5-3: Section 00 01 10 – Table of Contents

After 26 23 00 Low Voltage Switchgear, insert the following:

“*26 24 13	Low Voltage Switchboards

ITEM 5-4: <u>Section 00 01 10 – Table of Contents</u>

After 43 25 13 Submersible Solids-Handling Pumps, insert the following:

“*43 25 17	Sump Pumps

ITEM 5-5: <u>Section 00 40 00 – Forms for General Bid</u>

Delete Section 00 40 00 – Forms for General Bid and replace with Section 00 40 00 included in Attachment C.

ITEM 5-6: <u>Section 00 73 00 – Supplementary Conditions</u>

Delete SC-2.01 in its entirety and replace with the following:

“SC-2.01

Delete paragraph 2.01.B of the General Conditions in its entirety and insert the following in its place:

“B. Before any Work at the Site is started, Contractor shall deliver to Owner, with a copy to Engineer, certificates of insurance (and other evidence of insurance requested by Owner) which Contractor is required to purchase and maintain in accordance with the requirements of Article 5.

1. Contractor shall include and identify on the certificate of insurance, indemnification as required by Article 6.20 of the General Conditions.

2. Contractor agrees to defend, indemnify, and hold harmless Hazen and Sawyer and the Springfield Water and Sewer Commission from any claim or liability, arising out of Contractor’s performance of Work under the Agreement for any threatened environmental pollution or contamination the Contractor creates, generates, or releases in connection with the project, except to the extent that either Hazen and Sawyer and the Springfield Water and Sewer Commission has negligently caused or contributed to any such pollution or contamination. This indemnification includes reasonable attorney fees and expenses incurred by Hazen and Sawyer and the Springfield Water and Sewer Commission in defense of such claim. This indemnification does not extend to other pre-existing Hazardous and contaminated material that requires off-site disposal at the Commission’s facilities.”

ITEM 5-7: <u>Section 00 73 00 – Supplementary Conditions</u>

Delete paragraph SC-14.01.C in its entirety and replace with the following:

"C. Two lump sum payments each equal to 2% of the total Bid Price (to include all bonds, insurance, move-on expenses, etc.) will be allowed for 'mobilization' as progress payment line items. The actual costs of bonds and insurance (up to the maximum payment of 1%) will be considered in the initial payment request provided that cost documentation suitable to the Engineer is furnished by the Contractor. Any outstanding balance of the mobilization line item will be payable when the Project Work is 10% complete as indicated by the approved progress payments (less cost of mobilization and stored equipment)."

ITEM 5-8: <u>Section 01 11 00 – Summary of Work</u>

After paragraph 1.04.B.7, insert the following:

"8. Section 40 05 007 – Pipe Supports"

ITEM 5-9: <u>Section 01 11 00 – Summary of Work</u>

Delete paragraph 1.04.C in its entirety and replace with the following:

"C. Specifications related to the Waterproofing, Damp-proofing, and Caulking filed sub-bid category:
1. Section 07 10 00 – Basic Waterproofing, Damp-proofing, and Caulking Requirements.
2. Section 07 13 54 – Thermoplastic Sheet Waterproofing.
3. Section 07 26 16 – Below Grade Vapor Retarders1
4. Section 07 27 26 – Fluid-Applied Membrane Air Barriers."

ITEM 5-10: <u>Section 01 11 00 – Summary of Work</u>

Delete paragraph 1.04.D in its entirety and replace with the following:

"D. Specifications related to the Roofing and Flashing filed sub-bid category:
1. Section 07 50 00 – Basic Roofing and Flashing Requirements.
2. Section 07 52 00 – Built-Up Bituminous Roofing.
3. Section 07 70 00 – Roof Specialties and Accessories."

ITEM 5-11: <u>Section 01 11 00 – Summary of Work</u>

Delete paragraph 1.04.K in its entirety and replace with the following:

"K. Specifications related to the Fire Protection Sprinkler Systems filed sub-bid category:

1. Section 21 05 00 – Basic Requirements for Fire Suppression.
2. Section 21 05 29 – Hangers and Supports for Fire Suppression Piping and Equipment.
3. Section 21 05 53 – Identification for Fire Protection and Life Safety System Equipment.
4. Section 21 12 00 – Fire Suppression Standpipes.
5. Section 21 13 13 – Wet Pipe Sprinklers.
6. Section 21 13 19 – Preaction Sprinkler System
7. Section 21 22 00 – Clean Agent Fire Extinguishing System."

ITEM 5-12: <u>Section 01 11 00 – Summary of Work</u>

Delete paragraph 1.04.U in its entirety and replace with the following:

"U. Specifications related to the Electrical filed sub-bid category:2

1. Section 11 11 36.13 Commercial Electric Vehicle Charging Unit
2. Division 26 – Electrical.
3. Division 28 – Electronic Safety and Security"

ITEM 5-13: <u>Section 01 14 00 – Coordination with Owner's Operations</u>

After 1.06.D.2.d, insert the following:

"e. Connections to the Phosphate and Caustic lines are required for the construction of the new chemical injection vault. These connections must be made in a manner that does not remove the ability for chemical injection in the existing injection vaults. Additionally, chemical injection must be maintained to the system at all times without interruption.

f. Before the Tie-ins begin, the interconnection at Sackett Road shall be opened (valves 11828 through 11834) by Owner.

g. Tie-ins 1, 2, 3 and 4 part 1 may occur in the order proposed by the Contractor and approved by the Owner. Once these tie-ins are complete, the Contractor may proceed with Tie-in 4 part 2. Once Tie-in 4 part 2 is complete, the Contractor may proceed with Tie-in 5. No two tie-ins may occur simultaneously unless approved by the Owner. Tie-ins shall not be permitted on holiday or holiday weekends including Thanksgiving, Christmas, New Years, Memorial Day, July 4th and Labor Day.

h. The Tie-ins are shown in the Civil and General drawings. They are described as follows:

1) Tie-In No. 1 shall consist of installing two, 42” line stops at the existing 42” treated water pipe (TM 2 Middle), followed by cutting and draining the existing 42” filtered water main, disinfecting the entire section between the linestops per Section 40 05 00 – Basic Mechanical Requirements, then connecting a new steel fitting into the main. The Contractor shall construct a 36” temporary main up to a new, closed butterfly valve. The Contractor shall install piping, valves, thrust blocks, and cut and cap the 42” line as shown on the Drawings.

2) Tie-In 2 shall consist of isolating the north side of the hydraulic control structure by closing gates (by Owner) and installing stop logs (by Contractor) within structure. Complete tie-in 2 by coring the hydraulic control structure and installing the temporary treated water pipe, valve and slide gate shown in the Contract Drawings. Once Tie-in 2 is complete, the Contractor shall clean the hydraulic control structure and return it to service. To complete this work, the Raw Water lines feeding filtered water and washwater reservoir (formerly SSF 7), sand storage (formerly SSF 8), SSF 9-10 may be removed from service.

3) Tie-In No. 3 shall consist of shutting down SSF 11-14 and installing a linestop in the 36” treated water main. Once the linestop is installed, the Contractor shall cut and drain the 36” treated water main, then install a 36” x 36” x 36” tee, valve, and complete the connection to the hydraulic control structure. The new chemical injection vault shall be completed and commissioned by this time. During this shutdown, the Contractor shall also demolish and install the 36” treated water line at the location of the 72” raw water main as shown on the Civil drawings.

4) Tie-In 4 shall be conducted in two parts.

a) Part 1: The Contractor shall install a linestop on the 36” treated water pipe stub from TM 3 (South). The Contractor shall then make the connection to this stub with the 36” temporary treated water line and 36” butterfly valve. A new blowoff connection shall be installed on this stub. By this time, all temporary bypass conduits associated with Tie-ins 1 through 4 shall be installed and tested.

b) Part 2: The Owner shall close valves 11827, BV-36-02, BV-36-03 and BV-36-05 to take this section of TM 3 (South) offline and Contractor shall dewater the pipe. The Contract shall open the new slide gate and

valves installed during Tie-in 2 to send flow North out of the Hydraulic Control Structure. The Contractor shall cut and cap TM 3 (South) at the location shown on the Contract Drawings. Simultaneously along with this step, the Contractor shall move the existing ultrasonic flow meter on TM 3 (South) from the existing metering vault to a new metering vault built along the temporary treated water line.

c) Contractor shall return TM 3 (South) to service by opening new valves and linestops installed with Tie-ins 1, 2, 3 and 4, and the Owner shall close valve 215.

d) After Tie-In No. 4 is completed, tested, and disinfected, the Contractor may begin interim conditions as shown on G-013. Once interim conditions begin, the 60" treated water line (TM 3 South) may be removed within the footprint of the project as shown on the Contract Drawings. At this time, SSF 15-18 may be removed from service and corresponding raw water lines removed per the extent shown on the Contract Drawings.

5) Tie-In 5 shall consist of installing two, 60" linestop at the 60" transmission main (TM 1, North) and constructing a 36" bypass to maintain the 60" transmission main active during the completion of Tie-in 5. Cutting and draining the existing 60" treated water pipe, then connecting a new steel tee into the pipe shall be completed next. The Contractor shall install the tee with a new butterfly valve that is left in the closed position. Tie-in 5 may occur at any time before startup of the facility, and the bypass must be left in place until approved by the Owner."

ITEM 5-14: <u>Section 01 20 00 – Measurement and Payment</u>

Delete Section 01 20 00 – Measurement and Payment and replace with 01 20 00 included in Attachment D.

ITEM 5-15: <u>Section 01 51 00 – Temporary Utilities</u>

After paragraph 1.01.A.6 insert the following:

"7. The Electrical Subcontractor shall provide temporary light and electrical power, including service costs. The HVAC Subcontractor shall provide electric-powered temporary heating."

ITEM 5-16: <u>Section 01 51 00 – Temporary Utilities</u>

Delete paragraph 1.03.A in its entirety and replace with the following:

"A. Electricity and lighting:

1. Electrical Subcontractor shall provide electrical and lighting service for construction field offices, sheds, storage containers, etc. and as required for the Work.

2. General 120/240 V service requirements:
   a. Electrical Subcontractor shall provide 120/240 V, single phase, 3-wire temporary system for small power requirements and general lighting.
   b. Electrical Subcontractor shall provide main disconnect, overcurrent protection, meter outlet, branch circuit breakers, and wiring for temporary service to the Contractor's field office service connections. Contractor shall provide equipment and appurtenances in accordance with electricity service provider and applicable standards and codes
   c. Electrical Subcontractor shall register the 120/240 V electrical service meter in the Contractor's name and shall be responsible for electrical charges at no additional cost to the Owner.
   d. Electrical Subcontractor shall provide electrical service other than 120/240 V, single phase, 3-wire service as required for the Work at the Contractor's own expense.

3. General lighting requirements:
   a. Electrical Subcontractor shall provide a minimum of 10 foot candles for enclosed and partially enclosed structures for performing the Work.
   b. Electrical Subcontractor shall provide a night lighting circuit for security. Light intensity shall be a minimum of 2 foot candles.

D. Electrical Subcontractor shall energize the electrical system 15 minutes prior to and following regular work day hours at the Site. Required from Monday through Friday, all inclusive.

5. Electrical Subcontractor shall energize the night lighting system at end of typical working day and de-energize at start of typical working day. System shall be continuously energized on Saturdays, Sundays, and holidays.

6. Electrical Subcontractor shall provide an independent

grounding cable connected directly to the structure, building, and equipment for erection and fabrication by electrical welders. Grounding by adjacent conduit, piping, etc. shall be prohibited at the Site.

7. Contractor shall coordinate usage of temporary electrical system with Subcontractors, Suppliers, and Owner including the following:

   a. Usage is suitable for 120V, single phase, 60 Hz operation with a maximum operating input of 1,500 volt-amperes.
   b. One unit connected to a single outlet.
   c. Restrict usage in case of overloading circuits to correct loading."

ITEM 5-17: <u>Section 01 51 00 – Temporary Utilities</u>

Delete paragraph 1.03.C in its entirety and replace with the following:

"C. Heating:

1. HVAC Subcontractor shall provide temporary heating, ventilation coverings and enclosures necessary to protect the Work and materials against wetness and temperature damage, to dry out the Work, and to facilitate the Work in structures.

2. Equipment, fuel, materials, personnel and methods used shall be adequate to maintain critical installation temperatures and ventilation of Work at all times in areas where necessary to perform the Work.

3. Enclosed structures shall have a minimum temperature of 50°F, unless otherwise specified, where Work is performed.

4. HVAC Subcontractor shall provide sufficient heat to maintain a minimum temperature of 65°F before and during application of interior finishing, painting, coating, etc.

D. HVAC Subcontractor shall replace any Work damaged by dampness or insufficient/abnormal heating at no cost to the Owner."

ITEM 5-18: <u>Section 01 52 00 – Construction Facilities</u>

Delete paragraph 1.01.A.4 in its entirety and replace with the following:

"4. Hoisting Equipment, Scaffolding, Staging, Planking and Machinery"

ITEM 5-19: <u>Section 01 52 00 – Construction Facilities</u>

After paragraph 1.02.C insert the following:

"D. Hoisting Equipment, Scaffolding, Staging, Planking and Machinery.

D. Except as specified in other Specifications, the Contractor shall provide, set up, maintain and remove all derricks and hoisting machinery, and shall perform all hoisting required for the Project.

D. Except as specified in other Specifications, the Contractor shall furnish, install, maintain, and remove in a safe condition, scaffolding, staging, and planking over 8 feet in height and all supports therefore, for the use of all trades requiring same, and shall bear all costs therefrom, except as specified otherwise in the various sections of the Specifications. Confer with the various trades to ascertain where and when such scaffolding, staging and/or planking will be required.

D. Scaffolds shall have solid backs and floors to prevent dropping materials therefrom to the floors or ground."

ITEM 5-20: <u>Section 01 73 23 – Anchorage and Bracing of Nonstructural Components</u>

Delete section 1.03.E in its entirety and replace with:

"E. Delegated Design: Design of a structure or structural element(s) which has been deferred by the contract documents to be performed during the project construction stage, by a registered design professional and with the design submitted as a shop drawing to the Engineer."

ITEM 5-21: <u>Section 01 75 00 – Checkout and Startup Procedure</u>

After paragraph 1.05.C.4.i insert the following:

"j. Disposal of water for testing including flows, volumes, anticipated water quality and treatment if required, timeframes for disposal, method of conveyance and discharge location. In addition to the plan, the Contractor shall provide the Owner with 2 weeks notification before any anticipated discharge."

ITEM 5-22: <u>Section 01 75 00 – Checkout and Startup Procedure</u>

After paragraph 1.05.D.4 insert the following:

"5. If necessary, disposal of water including flows, volumes, anticipated water quality and treatment if required, timeframes for disposal, method of conveyance and discharge location. In addition to the plan, the Contractor shall provide the Owner with 2 weeks notification before any anticipated discharge."

ITEM 5-23: <u>Section 01 75 00 – Checkout and Startup Procedure</u>

Delete paragraph 3.07.A and replace with the following:

"A. Water for pressure testing, disinfection, and leak testing will be provided by the Owner from the nearest hydrant or other source. The Contractor shall provide all necessary apparatus to convey the water to the point of use, including back flow preventers, as required. The Contractor shall provide all necessary apparatus to meter flow and shall meter all flow used for testing."

ITEM 5-24: <u>Section 01 78 39 – Project Record Documents</u>

Delete paragraph 1.02.C and replace with the following:

"C. Electronic Files Furnished by Engineer:

1. Revit, Civil 3D, and Plant 3D files, collectively "electronic files", will be furnished for coordination by Engineer upon Contractor request and under the following conditions:

a. Contractor shall submit to Engineer a letter on Contractor letterhead requesting electronic files and providing specific definition(s) or description(s) of how files will be used, and specific description of benefits to Owner (including credit proposal, if applicable) if the request is granted.

D. Contractor shall execute Engineer's agreement for release of electronic files and shall abide by all provisions of the agreement for release of electronic files.

D. Layering system incorporated in electronic files shall be maintained as transmitted by Engineer. Electronic files transmitted by Engineer containing cross-referenced files shall not be bound by Contractor. Drawing cross-references and paths shall be maintained. If Contractor alters layers or cross-reference files, Contractor shall restore all layers and cross-references prior to submitting record documents to Engineer.

d. Contractor shall submit record drawings to Engineer in same electronic format that files were furnished to Contractor."

ITEM 5-25: <u>Section 01 91 00 – Building Systems Commissioning</u>

Delete paragraph 1.01.B in its entirety and replace with the following:

"B. The commissioning process will follow the requirements of the Massachusetts Building Code (780 CMR 10th Edition), the Massachusetts Commercial Stretch Energy Code (225 CMP 23.00), and the 2021 International Energy Conservation Code (IECC). The Massachusetts Stretch Energy Code adopts the 2021 IECC with amendments, which the City of Westfield has adopted. According to the definitions in Massachusetts Commercial Stretch Energy Code, Water Treatment Plant building follows the requirements of the Relative Performance Pathway, and Dewatering Building follows the requirements of the Prescriptive Pathway. Refer to Section 01 11 00 – Summary of Work for additional information."

ITEM 5-26: <u>Section 01 91 00 – Building Systems Commissioning</u>

Delete paragraph 3.05.B and replace with the following:

"B. The Contractor shall provide labor, materials, and equipment to facilitate a successful Commissioning process as led by the CxA. It is of primary concern that all operable systems installed in the Project perform in accordance with the Contract Documents and the specified Owner's operational requirements. During Commissioning, the Contract shall systematically demonstrate to the Owner that the

operable systems are properly performing in strict accordance with the Contract Documents and Owner requirements. The CxA scope expressively exclude providing independent validation of the approved permit package by AHJ under the Massachusetts Building Code, the Massachusetts Commercial Stretch Energy Code, and related applicable codes."

ITEM 5-27: <u>Section 03 35 00 – Concrete Finishes</u>

After 1.02.C, insert the following:

"D. Section 07 27 26 – Fluid Applied Membrane Air Barriers"

ITEM 5-28: <u>Section 03 35 00 – Concrete Finishes</u>

Delete section 3.05 in its entirety and replace with:

"3.05. FINISHES FOR SURFACES TO RECEIVE PAINT OR COATINGS OR FLUID APPLIED MEMBRANE AIR BARRIERS

D. Surfaces indicated or specified to receive paint or special coatings shall be prepared per specifications in Division 09. Surfaces indicated or specified to receive fluid applied membrane air barriers shall be prepared per specification 07 27 26 or as required by manufacturer. All products applied to the concrete surfaces during the placement, finishing, and curing process shall be compatible with the painting or coating system or fluid applied membrane air barriers as required by the manufacturer."

ITEM 5-29: <u>Section 04 00 00 – Basic Masonry Requirements</u>

Delete paragraph 1.02.D.1 in its entirety and replace with the following:

"1. MASONRY SUBCONTRACTOR shall furnish and install the cavity insulation material selected by the CONTRACTOR"

ITEM 5-30: <u>Section 04 00 00 – Basic Masonry Requirements</u>

After paragraph 1.02.D, insert the following:

"E. MASONRY SUBCONTRACTOR shall furnish and install masonry relief angles and steel lintels and jamb angles to support masonry

veneer in accordance with Section 05 05 23 – Metal Fastening and Section 05 50 00 – Metal Fabrications.

F. MASONRY SUBCONTRACTOR shall furnish and install steel plate, angle and anchors for top of masonry wall connections in accordance with Section 05 05 23 – Metal Fastening and Section 05 50 00 – Metal Fabrications.

G. MASONRY SUBCONTRACTOR shall furnish and install flashing at masonry wall systems in accordance with Section 07 60 00 – Flashing and Sheet Metal.

H. MASONRY SUBCONTRACTOR shall furnish and install firestopping at temporary and permanent penetrations due to its work in accordance with Section 07 84 00 – Firestopping.

D. MASONRY SUBCONTRACTOR shall furnish and install the firestopping material selected by the CONTRACTOR.

D. Staging and Scaffolding:

D. Hoisting Equipment: The MASONRY SUBCONTRACTOR shall furnish, install and maintain all mechanical hoisting equipment, operating personnel and rigging required for the execution of the Work as specified in this Section.

D. Staging, Planking and Scaffolding: The MASONRY SUBCONTRACTOR shall furnish, install and maintain all staging, planking and scaffolding up to eight feet in height required for the Work in this Section."

ITEM 5-31: <u>Section 04 00 00 – Basic Masonry Requirements</u>

Delete paragraph 1.04 in its entirety and replace with the following:

"1.04 RELATED WORK

D. Division 01 – General Requirements

B. Section 01 33 00 – Submittal Procedures

C. Section 01 73 23 – Anchorage and Bracing of Non-Structural Components

D. Section 01 74 00 – Cleaning and Waste Management

E. Section 03 30 00 – Cast-In-Place Concrete

F. Section 05 05 23 – Metal Fastening

G. Section 05 50 00 – Metal Fabrications

H. Section 07 27 26 – Fluid-Applied Membrane Air Barriers

D. Section 07 60 00 – Flashing and Sheet Metal

J. Section 07 84 00 – Firestopping

K. Section 07 90 00 – Joint Fillers, Sealants, and Caulking"

ITEM 5-32: <u>Section 04 05 13 – Masonry Mortaring</u>

Delete paragraph 1.02.B.3 in its entirety and replace with the following:

"3. The MASONRY SUBCONTRACTOR shall implement practices and procedures to meet the Project's sustainability goals as identified in the Contract Documents. The MASONRY SUBCONTRACTOR shall ensure that the sustainability requirements of this Section are implemented to the fullest extent."

ITEM 5-33: <u>Section 04 05 13 – Masonry Mortaring</u>

Delete paragraph 1.07.B and replace with the following:

"B. The MASONRY SUBCONTRACTOR shall engage an independent testing agency to conduct tests specified herein and as follows:"

ITEM 5-34: <u>Section 04 05 13 – Masonry Mortaring</u>

Delete paragraph 1.08.A in its entirety and replace with the following:

"A. The MASONRY SUBCONTRACTOR shall submit the Shop Drawings for the approval of the Engineer. Submittals shall include, but not be limited to:

D. Product Data: Manufacturer's specifications and installation instructions for proprietary materials.

D. Certificates: Notarized certificates that the following comply

with the specified requirements:

D. Portland cement

D. Hydrated lime

D. Mortar aggregates

D. Design Mix: Certified design mix for mortar.

D. Test Results: Results of mortar tests as specified herein and as specified in referenced standards.

D. Samples:

D. Each type of colored mortar in metal channels at least six (6)-inches long, showing the range of color that can be expected in the finished Work.

D. Label samples to indicate type and amount of colorant used. Engineer's review will be for color only.
Compliance with all other requirements is the responsibility of MASONRY SUBCONTRACTOR.

D. Schedule of locations where each mortar will be used in the Work."

ITEM 5-35: <u>Section 04 05 13 – Masonry Mortaring</u>

Delete paragraph 3.02.C.1 in its entirety and replace with the following:

"1. Site Facilities: Supplemental heat sources, as may be required should the MASONRY SUBCONTRACTOR wish to continue unit masonry construction in cold weather, are not available at the Site. The provision and expense of all supplemental heat energy sources, fuel, and equipment is the responsibility of the Contractor."

ITEM 5-36: <u>Section 04 05 16 – Masonry Grouting</u>

Delete paragraph 1.02.B.2 in its entirety and replace with the following:

"2. The MASONRY SUBCONTRACTOR shall implement practices and procedures to meet the Project's sustainability goals as identified in

the Contract Documents. The MASONRY SUBCONTRACTOR shall ensure that the sustainability requirements of this Section are implemented to the fullest extent."

ITEM 5-37: <u>Section 04 05 16 – Masonry Grouting</u>

Delete paragraph 1.07.B and replace with the following:

"B. The MASONRY SUBCONTRACTOR shall engage an independent testing agency to conduct tests specified herein and as follows:"

ITEM 5-38: <u>Section 04 05 16 – Masonry Grouting</u>

Delete paragraph 1.08.A and replace with the following:

"A. The MASONRY SUBCONTRACTOR shall submit the Shop Drawings for the approval of the Engineer. Submittals shall include, but not be limited to:"

ITEM 5-39: <u>Section 04 05 16 – Masonry Grouting</u>

Delete paragraph 1.08.A.5.b in its entirety and replace with the following:

"b. Label samples to indicate type and amount of colorant used. Engineer's review will be for color only. Compliance with all other requirements is the responsibility of MASONRY SUBCONTRACTOR."

ITEM 5-40: <u>Section 04 05 19 – Masonry Anchorage and Reinforcing</u>

Delete paragraph 1.07.C in its entirety and replace with the following:

"C. Sample Panel: The MASONRY SUBCONTRACTOR shall erect sample panel.

D. The sample panel shall include facing veneer, bond pattern, mortar color, tooled joints, insulation, reinforcing, and all masonry accessories and backup.

2. Upon approval, the sample panel shall remain in place for the duration of masonry construction and shall be used as a basis of comparison for all masonry Work.
3. After final approval of finished masonry Work by the Engineer, the MASONRY SUBCONTRACTOR shall demolish the sample panel, and shall perform all Site

restoration Work.

D. Sample Panels: The MASONRY SUBCONTRACTOR shall erect a mock wall as indicated in the Contract Documents and in addition, provide four (4) foot long by three (3) foot high sample panels for each color of filled ground face concrete masonry units to be used in the Work."

ITEM 5-41: <u>Section 04 05 19 – Masonry Anchorage and Reinforcing</u>

Delete paragraph 1.08.A in its entirety and replace with the following:

"A. The MASONRY SUBCONTRACTOR shall prepare and submit for approval catalog cuts, drawings, and reference materials in accordance with Section 01 33 00 – Submittal Procedures. Submittals shall include the following:

D. Test Reports: The MASONRY SUBCONTRACTOR shall submit material test reports or manufacturer's certificate of compliance for prefaced masonry units, concrete masonry units, and stone masonry."

ITEM 5-42: <u>Section 04 05 19 – Masonry Anchorage and Reinforcing</u>

Delete paragraph 2.02.A in its entirety and replace with the following:

"A. Metal Accessories:

D. For interior walls and partitions, and as required to secure masonry to adjoining construction, the MASONRY SUBCONTRACTOR shall provide hot-dipped galvanized metal anchors, ties and reinforcements conforming to ASTM A153/A153M, Class B2 that are galvanized after cutting.

D. For exterior walls, the MASONRY SUBCONTRACTOR shall provide Type 316 stainless steel for anchors, anchor slots, ties, and horizontal reinforcement."

ITEM 5-43: <u>Section 04 05 19 – Masonry Anchorage and Reinforcing</u>

Delete paragraph 2.02.D in its entirety and replace with the following:

"D. Rebar Positioners: The MASONRY SUBCONTRACTOR shall provide vertical and horizontal rebar positioners spaced at forty-eight (48)-inch centers maximum."

ITEM 5-44: <u>Section 04 22 23.23 – Prefaced Concrete Unit Masonry</u>

After paragraph 1.04F, insert the following:

"G. Section 07 27 26 – Fluid-Applied Membrane Air Barriers

H. Section 07 60 00 – Sheet Metal Flashing and Trim

D. Section 07 84 00 – Firestopping"

ITEM 5-45: <u>Section 04 22 23.23 – Prefaced Concrete Unit Masonry</u>

Delete paragraph 1.07.C in its entirety and replace with the following:

"C. Sample Panel: The MASONRY SUBCONTRACTOR shall erect sample panel.

D. The sample panel shall include facing veneer, bond pattern, mortar color, tooled joints, control joints, insulation, reinforcing, all masonry accessories and backup.

D. Upon approval, the sample panel shall remain in place for the duration of masonry construction and shall be used as a basis of comparison for all masonry Work.

D. After final approval of finished masonry Work by the Engineer, the MASONRY SUBCONTRACTOR shall demolish the sample panel, and shall perform all Site restoration Work.

D. Sample Panels: Prior to installation of unit masonry Work, but after Engineer's approval of samples, erect job mock-ups using materials, pattern bond and joint tooling shown or specified for final Work. Build mock-ups at the Site, in location approved by the Engineer, of full thickness and approximately four (4)-feet wide by four (4)-feet high with four (4)-feet returns on both sides, unless otherwise shown.

Indicate the proposed range of color, texture, and workmanship to be expected in the completed Work in each area of the Work. Obtain Engineer's acceptance of visual qualities of the mock-ups before start of masonry Work. Retain and protect mock-ups during construction as a standard for judging completed masonry Work. Do not alter, move, or destroy mock-ups until given written permission by Engineer. Masonry construction that does not meet the standards approved on the job mock-ups shall be removed and rebuilt as required by Engineer. Provide mock-ups of the portions of the unit masonry partition intersection showing all special shapes to be used in the Work."

ITEM 5-46: <u>Section 04 22 23.23 – Prefaced Concrete Unit Masonry</u>

Delete paragraph 1.08.A in its entirety and replace with the following:

"A. The MASONRY SUBCONTRACTOR shall prepare and submit for approval catalog cuts, drawings, and reference materials in accordance with Section 01 33 00 – Submittal Procedures.

D. Submittals shall include the following:
Samples: The MASONRY SUBCONTRACTOR shall submit three (3) samples each of all prefaced concrete masonry units that are representative of the full range of color, shading and texture of the material to be provided.

D. Test Reports: The MASONRY SUBCONTRACTOR shall submit material test reports or manufacturer's certificate of compliance for <u>preface concrete masonry units</u>, concrete masonry units, and decorative concrete masonry units".

ITEM 5-47: <u>Section 04 22 23.23 – Prefaced Concrete Unit Masonry</u>

After paragraph 3.03.B, insert the following:

"C. Surfaces indicated to receive fluid applied membrane air barriers shall be prepared in accordance with Section 07 27 26 – Fluid-Applied Membrane Air Barriers."

ITEM 5-48: <u>Section 04 43 00 – Stone Masonry</u>

Delete paragraph 1.07.C in its entirety and replace with the following:

"C. Sample Panel: The MASONRY SUBCONTRACTOR shall erect sample panel in coordination with Specification 04 22 23.23 Prefaced Concrete Unit Masonry.

D. The sample panel shall include elements typical of the stonework on this project.

D. Upon approval, the sample panel shall remain in place for the duration of stone masonry construction and shall be used as a basis of comparison for all stone masonry work.

D. After final approval of finished stone masonry work by the Engineer, the MASONRY SUBCONTRACTOR shall demolish the sample panel, and shall perform all site restoration work."

ITEM 5-49: <u>Section 04 43 00 – Stone Masonry</u>

Delete paragraph 1.08.A in its entirety and replace with the following:

"A. The MASONRY SUBCONTRACTOR shall prepare and submit for approval catalog cuts, drawings, and reference materials in accordance with Section 01 33 00 – Submittal Procedures. Submittals shall include the following:

D. Samples: The MASONRY SUBCONTRACTOR shall submit three (3) samples each of stone that are representative of the full range of color, shading, texture, and size of the material to be provided.

D. Shop Drawings: The MASONRY SUBCONTRACTOR shall submit cutting and setting drawings indicating sizes, dimensions, sections and profiles of stones, along with arrangement and provisions for jointing, supporting, anchoring, and bonding stonework. Shop Drawings shall include relationship with, attachment to, and reception of all related Work.

D. Test Reports: The MASONRY SUBCONTRACTOR shall submit material test reports of tests performed

on stone masonry units in accordance with ASTM C99 for Modulus of Rupture and ASTM C170 for Compressive Strength."

ITEM 5-50: <u>Section 05 00 00 – Miscellaneous And Ornamental Iron</u>

Add to end of 1.02.A.6, insert the following:

"7. Section 40 05 07 – Pipe Supports"

ITEM 5-51: <u>Section 05 14 00 – Structural Aluminum</u>

Delete Section 05 14 00 in it's entirety and replace with Attachment E.

ITEM 5-52: <u>Section 05 40 00 – Cold-Formed Metal Framing</u>

Delete Section 05 40 00 in its entirety and replace with Attachment F.

ITEM 5-53: <u>Section 05 51 00 – Metal Stairs</u>

Delete Section 2.03 D in its entirety and replace with:

"D. Guards for metal stairs shall conform to Section 05 52 00 Guards and Railings. MISCELLANEOUS AND ORNAMENTAL IRON SUBCONTRACTOR shall coordinate attachment of guards to metal stairs."

ITEM 5-54: <u>Section 05 51 00 – Metal Stairs</u>

Delete Section 2.04.A.12 in its entirety and replace with:

"12. MISCELLANEOUS AND ORNAMENTAL IRON SUBCONTRACTOR shall be exclusively responsible for the design of steel pan stairs as shown on the Drawings including, but not limited to, treads, risers, landings, framing, hangers, beams, columns, struts, clips, brackets, bracing, bearing plates, connections (bolts, welds, concrete anchors, fasteners, etc.), guardrail, handrail, and other necessary components and appurtenances required for complete design and assembly of the steel pan stair system."

ITEM 5-55: <u>Section 05 51 00 – Metal Stairs</u>

Delete Section 2.04.C in its entirety and replace with:

"C. Guards for steel pan stairs shall conform to Section 05 52 00 Guards and Railings. MISCELLANEOUS AND ORNAMENTAL

IRON SUBCONTRACTOR shall coordinate connection of guards to stairs."

ITEM 5-56: <u>Section 05 51 00 – Metal Stairs</u>

Delete paragraph 3.01.A in its entirety and replace with the following:

"A. All measurements and dimensions shall be based on field conditions and shall be verified by the Contractor and coordinated with the MISCELLANEOUS AND ORNAMENTAL IRON SUBCONTRACTOR prior to fabrication. Such verification shall include coordination with adjoining work."

ITEM 5-57: <u>Section 05 51 33 – Ladders</u>

Delete paragraph 3.01.A in its entirety and replace with the following:

"A. All measurements and dimensions shall be based on field conditions and shall be verified by the Contractor and coordinated with the MISCELLANEOUS AND ORNAMENTAL IRON SUBCONTRACTOR prior to fabrication. Such verification shall include coordination with adjoining work."

ITEM 5-58: <u>Section 05 52 00 – Guards and Railings</u>

Delete Section 05 52 00 in its entirety and replace with Attachment G.

ITEM 5-59: <u>Section 05 53 00 Gratings, Checkered Floor Plates and Access Doors</u>

Delete paragraph 3.01.A in its entirety and replace with the following:

D. All measurements and dimensions shall be based on field conditions and shall be verified by the Contractor and coordinated with MISCELLANEOUS AND ORNAMENTAL IRON SUBCONTRACTOR prior to fabrication. Such verification shall include coordination with adjoining work."

ITEM 5-60: <u>Section 05 55 00 – Stair Treads and Nosings</u>

Delete paragraph 3.01.A in its entirety and replace with the following:

"A. All measurements and dimensions shall be based on field conditions and shall be verified by the Contractor and coordinated with the MISCELLANEOUS AND ORNAMENTAL IRON SUBCONTRACTOR prior to fabrication. Such verification shall

include coordination with adjoining work."

ITEM 5-61: <u>Section 07 10 00 Basic Waterproofing, Damproofing, and Caulking Requirements</u>

Delete Section 07 10 00 in its entirety and replace with Attachment H.

ITEM 5-62: <u>Section 07 13 54 – Thermoplastic Sheet Waterproofing</u>

Delete Section 07 13 54 in its entirety and replace with Attachment I.

ITEM 5-63: <u>Section 07 27 26 – Fluid Applied Membrane Air Barrier</u>

Delete Section 07 27 26 in its entirety and replace with Attachment J.

ITEM 5-64: <u>Section 07 50 00 Basic Roofing and Flashing</u>

Delete Sections 1.02A.2 in its entirety and replace with the following:

"2. NOT USED"

ITEM 5-65: <u>Section 07 50 00 Basic Roofing and Flashing</u>

Insert after Section 1.02C:

"D. ROOFING AND FLASHING SUBCONTRACTOR shall furnish and install flashing at roofing systems in accordance with Section 07 60 00 – Flashing and Sheet Metal."

ITEM 5-66: <u>Section 07 50 00 Basic Roofing and Flashing</u>

Insert after Section 1.03D:

"E. Section 01 91 00 – Building Systems Commissioning

F. Section 07 60 00 – Flashing and Sheet Metal"

ITEM 5-67: <u>Section 07 52 00 – Built-Up Bituminous Roofing</u>

Delete paragraph 1.09.D in its entirety and replace with the following:

"D. It is the responsibility of the ROOFING AND FLASHING SUBCONTRACTOR to secure all material and equipment on the job site. If any material or equipment is stored on the roof, the ROOFING AND FLASHING SUBCONTRACTOR must make sure that the integrity of the deck is not compromised at any time.

Damage to the deck caused by the ROOFING AND FLASHING SUBCONTRACTOR will be the sole responsibility of the ROOFING AND FLASHING SUBCONTRACTOR and will be repaired or replaced at his expense."

ITEM 5-68: <u>Section 07 52 00 – Built-Up Bituminous Roofing</u>

Delete paragraph 2.12.D in its entirety and replace with the following:

"D. Wood Blocking and Nailer Strips: Comply with requirements in Section 06 10 00 Rough Carpentry."

ITEM 5-69: <u>Section 07 60 00 – Flashing and Sheet Metal</u>

Delete Section 07 60 00 in its entirety and replace with the Section in Attachment K.

ITEM 5-70: <u>Section 07 70 00 – Roof Specialties and Accessories</u>

Delete paragraph 1.06.F.2 in its entirety and replace with the following:

"2. Wind resistance calculation shall be designed specifically for this project. The ROOFING AND FLASHING SUBCONTRACTOR shall calculate and certify that the perimeter roof specialties systems furnished meet the anticipated design pressure as specified in the specifications when tested in accordance with SPRI Test Methods RE-2 and RE 3."

ITEM 5-71: <u>Section 07 70 00 – Roof Specialties and Accessories</u>

Delete paragraph 1.06.F.6 in its entirety and replace with the following:

"6. The ROOFING AND FLASHING SUBCONTRACTOR must obtain all components of the roof specialties system from a single manufacturer. Any secondary products that are required which cannot be supplied by the specified manufacturer must be recommended by the manufacturer and approved by the Engineer."

ITEM 5-72: <u>Section 07 84 00 Firestopping</u>

Insert the following under paragraph 1.02C:

"D. Section 09 29 00 - Gypsum Drywall System"

ITEM 5-73: <u>Section 07 84 00 Firestopping</u>

Delete paragraph 3.03 C in its entirety and replace with the following:

"C. Whether or not indicated on the contract drawings all firestopping shall be provided and shall maintain the fire integrity of the assemblies indicated as work of this project."

ITEM 5-74: <u>Section 07 90 00 Joint Fillers, Sealants and Caulking</u>

Delete Section 07 90 00 in its entirety and replace with Attachment L.

ITEM 5-75: <u>Section 07 95 00 Expansion Joint System</u>

Delete Section 07 95 00 in its entirety and replace with Attachment M.

ITEM 5-76: <u>Section 08 40 00 – Basic Metal Windows Requirements</u>

After 1.02.C, Insert the following:

"D. METAL WINDOWS SUBCONTRACTOR shall furnish and install glazing at Aluminum-Framed Entrances and Storefronts and Glazed Aluminum Curtain Wall Systems in accordance with Section 08 81 03 – Glass, Plastic and Glazing.

D. METAL WINDOWS SUBCONTRACTOR shall provide whole assembly U-factor performance of U-0.25 or less. Compliance data is subject to the building envelope requirements of Section 01 91 00 – Building Systems Commissioning.

E. METAL WINDOWS SUBCONTRACTOR shall furnish and install finish door hardware in accordance with the requirements of Section 08 41 13 – Aluminum-Framed Entrances and Storefront.

D. METAL WINDOWS SUBCONTRACTOR shall install cylinders as furnished by the GENERAL CONTRACTOR in accordance with the requirements of Section 08 71 00 – Finish Hardware. Master keying system shall be work of the GENERAL CONTRACTOR.

F. Staging and Scaffolding:

D. Hoisting Equipment: The METAL WINDOWS SUBCONTRACTOR shall furnish, install and maintain all mechanical hoisting equipment,

operating personnel and rigging required for the execution of the Work as specified in this Section.

D. Staging, Planking and Scaffolding: The METAL WINDOWS SUBCONTRACTOR shall furnish, install and maintain all staging, planking and scaffolding up to eight feet in height required for the Work in this Section."

ITEM 5-77: <u>Section 08 40 00 – Basic Metal Windows Requirements</u>

After 1.03.C, Insert the following:

"D. Section 07 60 00 – Flashing and Sheet Metal"

ITEM 5-78: <u>Section 08 41 13 – Aluminum-Framed Entrances and Storefront</u>

Delete paragraph 1.02E in it's entirety and replace with

"E. METAL WINDOWS SUBCONTRACTOR shall supply a full scale job mock-up of all systems proposed as work of the this section before proceeding with the Work and all labor, materials, equipment and incidentals as shown, specified and required to furnish, install and place into satisfactory service all components of the aluminum storefront system, interior aluminum storefront system and aluminum-framed entrance Work."

ITEM 5-79: <u>Section 08 41 13 – Aluminum-Framed Entrances and Storefront</u>

Delete paragraph 1.05.C.1.c in it's entirety and replace with

"c. Modifications: The system requirements shown are intended to establish basic dimensions of units, modules, profiles, mullion depths, sight lines, support locations of members and the visual design intention. Within these limitations the METAL WINDOWS SUBCONTRACTOR shall be responsible for the structural adequacy, detailing and fabrication of the entire system, including anchorage, and to make whatever modifications of, and additions to the details as may be required to fulfill the performance requirements as acceptable to Engineer, at no additional expense to the Owner. Maintain the visual design concept as shown, including member sizes, profiles, support locations and alignment of components."

ITEM 5-80: <u>Section 08 41 13 – Aluminum-Framed Entrances and Storefront</u>

Delete paragraph 1.06.A.1.e in it's entirety and replace with

"e. Samples will be reviewed by Engineer for color and texture only. Compliance with other requirements is the exclusive responsibility of METAL WINDOWS SUBCONTRACTOR."

ITEM 5-81: <u>Section 08 44 13 – Glazed Aluminum Curtain Wall System</u>

Delete Section 08 44 13 in its entirety and replace with Attachment N.

ITEM 5-82: <u>Section 08 45 23 Translucent Wall Assemblies</u>

After paragraph 1.02B add

"C. Section 07 60 00 – Flashing and Sheet Metal"

ITEM 5-83: <u>Section 08 63 00 – Translucent Skylight Assemblies</u>

Delete paragraph 1.04 it its entirety and replace with

"A. Performance Requirements: Provide translucent skylight assembly system which has been manufactured, fabricated and installed to withstand from dead, live, and all other loads required by the current Building Code of the State of Massachusetts and performance criteria stated by manufacturer without defects, damage or failure.

B. Structural Skylight Requirements

1. Structural framing to be designed to meet the requirements of the current Building Code of the State of Massachusetts in which the project is located. System design and calculations must also be furnished in accordance with the Aluminum Association "Specifications for Aluminum Structures" and sealed by a Professional Engineer registered in the State of Massachusetts in which the project is located.

2. Superstructure shall be pre-fabricated of extruded aluminum alloy 6005-T5 or 6061-T6 tubular box beams. Ferrous metals shall not be allowed. All parts shall be pre-assembled at the factory and knocked down for shipment to jobsite.

3. Panels shall be as specified herein.

D. Finish on exposed structure shall be as specified herein."

ITEM 5-84: <u>Section 09 20 00 – Basic Lathing and Plastering</u>

After 1.02.C, Insert the following:

"D. LATHING AND PLASTERING SUBCONTRACTOR shall furnish and install cold-formed metal framing in accordance with Section 05 40 00 – Cold-Formed Metal Framing.

E. LATHING AND PLASTERING SUBCONTRACTOR shall furnish and install firestopping at temporary and permanent penetrations due to its work in accordance with Section 07 84 00 – Firestopping.

D. LATHING AND PLASTERING SUBCONTRACTOR shall furnish and install the firestopping material selected by the CONTRACTOR.

F. Staging and Scaffolding:

D. Hoisting Equipment: The LATHING AND PLASTERING SUBCONTRACTOR shall furnish, install and maintain all mechanical hoisting equipment, operating personnel and rigging required for the execution of the Work as specified in this Section.

D. Staging, Planking and Scaffolding: The LATHING AND PLASTERING SUBCONTRACTOR shall furnish, install and maintain all staging, planking and scaffolding up to eight feet in height required for the Work in this Section."

ITEM 5-85: <u>Section 09 20 00 – Basic Lathing and Plastering</u>

After 1.03.C, insert the following:

"D. Section 05 40 00 – Cold-Formed Metal Framing

E. Section 07 84 00 – Firestopping

F. Section 07 90 00 – Joint Fillers, Sealants, and Caulking"

ITEM 5-86: <u>Section 09 29 00 – Gypsum Drywall System</u>

After 1.03.B, insert the following:

"C. Section 07 27 26 – Fluid-Applied Membrane Air Barriers

D. Section 07 84 00 – Firestopping

E. Section 07 90 00 – Joint Fillers, Sealants and Caulking"

ITEM 5-87: <u>Section 09 29 00 – Gypsum Drywall System</u>

Delete paragraph 3.05.B in its entirety and replace with the following:

"B. Wall surfaces indicated to receive fluid applied membrane air barriers shall be prepared in accordance with Section 07 27 26 – Fluid-Applied Membrane Air Barriers"

ITEM 5-88: <u>Section 09 30 00 – Tiling</u>

Delete paragraph 1.09A it its entirety and replace with

"A. TILE SUBCONTRACTOR shall submit Shop Drawings for approval of the Engineer. Submittals shall include, but not be limited to catalog cuts and reference materials.

1. Product Data: The TILE SUBCONTRACTOR shall submit:

a. Copies of specifications, installation instructions and general recommendations from the Thin set porcelain tile manufacturer, for each type of Thin set porcelain tile product.

D. Manufacturer's data substantiating that the materials comply with the requirements shall be included.

2. Samples:

D. Samples of floor and wall tile shall be submitted for color selection."

ITEM 5-89: <u>Section 09 30 00 – Tiling</u>

Delete paragraph 1.11A it its entirety and replace with

"A. The TILE SUBCONTRACTOR shall furnish 10 floor tiles as replacement flooring for each type, color and size of tile used throughout the project from the same manufactured lot as the materials installed."

ITEM 5-90: <u>Section 09 30 00 – Tiling</u>

Delete paragraph 3.01.A it its entirety and replace with

"A. The TILE SUBCONTRACTOR shall verify that areas to receive Thin set porcelain tile materials are properly prepared and completed to final grades and elevations."

ITEM 5-91: <u>Section 09 65 00 Resilient Flooring</u>

Delete Section 09 65 00 in its entirety and replace with Attachment O.

ITEM 5-92: <u>Section 09 90 00 Painting</u>

Delete paragraph 1.06.A.3 in its entirety and replace with the following:

"3. PAINTING SUBCONTRACTOR shall submit Q.C. inspection plan describing all tests and inspections task to be performed. Include copy of daily log showing environmental conditions measurements and frequency. Copy of completed log shall be provided at completion of work."

ITEM 5-93: <u>Section 09 90 00 Painting</u>

Delete paragraph 1.08.B in its entirety and replace with the following:

"B. PAINTING SUBCONTRACTOR shall coordinate Q.C Inspections."

ITEM 5-94: <u>Section 09 90 00 Painting</u>

Delete paragraph 3.02.B.1 in its entirety and replace with the following:

"1. Prepare all welds to a minimum NACE weld preparation level "C" per NACE Standard SP0178. Provide additional weld preparation where required by the coating manufacturer. PAINTING SUBCONTRACTOR shall provide NACE SP0178 weld mold visual aids on site for evaluation of all weld preparation."

ITEM 5-95: <u>Section 11 11 36.16 – Commercial Electric Vehicle Charging Unit</u>

Delete Section 11 11 36.16 in its entirety and replace with Attachment P.

ITEM 5-96: <u>Section 14 21 23 - Electric Traction Passenger Elevator</u>

Delete Section 14 21 23 in its entirety and replace with the Section in Attachment Q.

ITEM 5-97: <u>Section 21 05 00 – Basic Fire Suppression Requirements</u>

Delete paragraph 1.01 in its entirety and replace with the following:

"1.01 FILED SUB-BID REQUIREMENTS

A. A sub-bid submitted for the work of Division 21 – Fire Suppression shall include the complete work specified in all of the following Sections:

1. Section 21 05 29 – Hangers and Supports for Fire Suppression Piping and Equipment
2. Section 21 05 53 – Identification for Fire Protection and Life Safety System Equipment
3. Section 21 12 00 – Fire Suppression Standpipes
4. Section 21 13 13 – Wet Pipe Sprinklers
5. Section 21 13 19 – Preaction Sprinkler Systems
6. Section 21 22 00 – Clean Agent Fire Extinguishing System"

ITEM 5-98: <u>Section 21 05 00 – Basic Fire Suppression Requirements</u>

Delete paragraph 1.06.C.1.a in its entirety and replace with the following:

"a Prepare in electronic format as required in Division 01 or as otherwise directed."

ITEM 5-99: <u>Section 21 05 00 – Basic Fire Suppression Requirements</u>

Delete paragraph 1.01.D in its entirety and replace with the following:

"D. Staging and Scaffolding:

1. Hoisting Equipment: The PLUMBING SUBCONTRACTOR shall furnish, install and maintain all mechanical hoisting equipment, operating personnel and rigging required for the execution of the Work as specified in this Section.
2. Staging, Planking and Scaffolding: The PLUMBING SUBCONTRACTOR shall furnish, install and maintain all staging, planking and scaffolding up to eight feet in height required for the Work in this Section."

ITEM 5-100: <u>Section 21 13 19 – Preaction Sprinkler Systems</u>

Insert Section 21 13 19 Preaction Sprinkler System included in Attachment R.

ITEM 5-101: <u>Section 22 05 00 – Basic Plumbing Requirements</u>

Delete paragraph 1.03.B.1.a in its entirety and replace with the following:

"a Prepare in electronic format as required in Division 01 or as otherwise directed."

ITEM 5-102: <u>Section 22 11 13 – Facility Water Distribution Piping</u>

Delete paragraph 1.08.C in its entirety and replace with the following:

"C The PLUMBING SUBCONTRACTOR shall maintain as-built drawings of each completed phase for verification; and, shall provide the complete set at the time of final systems certification testing. As-built drawings are to be prepared in electronic format as required in Division 01. Should the PLUMBING SUBCONTRACTOR engage the testing company to provide as-built or any portion thereof, it shall not be deemed a conflict of interest or breach of the 'third party testing company' requirement."

ITEM 5-103: <u>Section 22 13 16 – Sanitary Waste and Vent Piping</u>

Delete paragraph 1.06.A in its entirety and replace with the following:

"A. The installing contractor shall maintain as-built drawings of each completed phase for verification; and, shall provide the complete set at the time of final systems certification testing. As-built drawings are to be prepared in electronic format as required in Division 01. Should the installing contractor engage the testing company to provide as-built or any portion thereof, it shall not be deemed a conflict of interest or breach of the 'third party testing company' requirement."

ITEM 5-104: <u>Section 22 14 29 – Sump Pumps</u>

Delete paragraph 1.07.C in its entirety and replace with the following:

"C. The installing contractor shall maintain as-built drawings of each completed phase for verification; and, shall provide the complete set at the time of final systems certification testing. As-built

drawings are to be prepared in electronic format as required in Division 01. Should the installing contractor engage the testing company to provide as-built or any portion thereof, it shall not be deemed a conflict of interest or breach of the 'third party testing company' requirement.."

ITEM 5-105: <u>Section 22 31 11 – Packaged Laboratory Water Purification System</u>

Delete paragraph 1.08.C in its entirety and replace with the following:

"C. The installing contractor shall maintain as-built drawings of each completed phase for verification; and, shall provide the complete set at the time of final systems certification testing. As-built drawings are to be prepared electronically as required in Division 01. Should the installing contractor engage the testing company to provide as-built or any portion thereof, it shall not be deemed a conflict of interest or breach of the 'third party testing company' requirement."

ITEM 5-106: <u>Section 23 00 00 – Basic HVAC Requirements</u>

Delete paragraph 1.03.B.1.a in its entirety and replace with the following:

"a Prepare in electronic format as required in Division 01."

ITEM 5-107: <u>Section 26 05 00 – Basic Electrical Requirements</u>

Delete paragraph 1.02.A in its entirety and replace with the following:

"A. A Filed Sub-Bid submitted for the work of Division 26 – Electrical shall include the complete work specified in Section 11 11 36.13, Division 26, and Division 28."

ITEM 5-108: <u>Section 26 05 00 – Basic Electrical Requirements</u>

Delete paragraph 1.02.E in its entirety and replace with the following:

"E. Staging and Scaffolding:

1. Hoisting Equipment: The ELECTRICAL SUBCONTRACTOR shall furnish, install and maintain all mechanical hoisting equipment, operating personnel and rigging required for the execution of the Work as specified in this Section.
2. Staging, Planking and Scaffolding: The ELECTRICAL SUBCONTRACTOR shall furnish, install and maintain all staging, planking and scaffolding up to eight feet in height

required for the Work in this Section."

ITEM 5-109: <u>Section 26 05 00 – Basic Electrical Requirements</u>

Delete paragraph 1.03 in its entirety and insert the following:

"1.03 RELATED SECTIONS

A. Division 00 – Procurement and Contracting Requirements.
B. Division 01 – General Requirements.
C. Section 11 11 36.13 – Commercial Electric Vehicle Charging Unit
D. Section 33 17 19 – Underground Electrical
E. Division 40 – Process Interconnections.
F. Section 41 22 00 – Cranes and Hoists.
G. Division 43 – Process Gas and Liquid Handling, Purification, and Storage Equipment.
H. Division 46 – Water and Wastewater Equipment."

ITEM 5-110: <u>Section 26 05 00 – Basic Electrical Requirements</u>

After paragraph 1.04.C.13 insert the following:

"14. Furnish and install electric-vehicle charging stations (EVCS). The electric-vehicle charging stations (EVCS) must be installed by a Massachusetts Licensed Electrical Contractor."

ITEM 5-111: <u>Section 26 05 13 – Medium Voltage Cables</u>

Delete Section 26 05 13 in its entirety and replace with the Section in Attachment S.

ITEM 5-112: <u>Section 26 05 19 – Low Voltage Conductors and Cables</u>

Delete Section 26 05 19 in its entirety and replace with the Section in Attachment T.

ITEM 5-113: <u>Section 26 05 26 – Grounding and Bonding for Electrical Systems</u>

Delete Section 26 05 26 in its entirety and replace with the Section in Attachment U.

ITEM 5-114: <u>Section 26 05 29 – Hangers and Supports for Electrical Systems</u>

Delete Section 26 05 29 in its entirety and replace with the Section in Attachment V.

ITEM 5-115: <u>Section 26 05 33.13 – Conduit for Electrical Systems</u>

Delete Section 26 05 33.13 in its entirety and replace with the Section in Attachment W.

ITEM 5-116: <u>Section 26 05 33.16 – Boxes for Electrical Systems</u>

Delete paragraph 1.04.A in its entirety and replace with the following:

"A. In accordance with the procedures and requirements set forth in the General Conditions and Section 01 33 00 – Submittal Procedures, the ELECTRICAL SUBCONTRACTOR shall obtain from the equipment manufacturer(s) and submit the following:

1. Shop Drawings"

ITEM 5-117: <u>Section 26 05 33.16 – Conduit for Electrical Systems</u>

Delete paragraph 1.05.B in its entirety and replace with the following:

"B. Partial, incomplete or illegible Submittals will be returned to the ELECTRICAL SUBCONTRACTOR without review for resubmittal."

ITEM 5-118: <u>Section 26 05 33.16 – Conduit for Electrical Systems</u>

Delete paragraph 1.06.A in its entirety and replace with the following:

"A. The ELECTRICAL SUBCONTRACTOR shall submit operation and maintenance manuals in accordance with the procedures and requirements set forth in the General Conditions and Division 01."

ITEM 5-119: <u>Section 26 05 36 – Cable Trays for Electrical Systems</u>

Delete Section 26 05 36 in its entirety and replace with the Section in Attachment X.

ITEM 5-120: <u>Section 26 05 53 – Identification for Electrical Systems</u>

Delete paragraph 1.04.A in its entirety and replace with the following:

"A. The ELECTRICAL SUBCONTRACTOR shall coordinate names, abbreviations, and other designations used in the electrical identification work with the corresponding designations shown, specified or scheduled. Provide numbers, lettering, and wording as indicated or, if not otherwise indicated, as recommended by

021523

manufacturers or as required for proper identification and operation/maintenance of the electrical systems and equipment."

ITEM 5-121: <u>Section 26 05 53 – Identification for Electrical Systems</u>

Delete paragraph 1.05.A in its entirety and replace with the following:

"A. In accordance with the procedures and requirements set forth in the General Conditions and Section 01 33 00 – Submittal Procedures, the ELECTRICAL SUBCONTRACTOR shall obtain from the equipment manufacturer and submit shop drawings. Each submittal shall be identified by the applicable Specification Section."

ITEM 5-122: <u>Section 26 05 53 – Identification for Electrical Systems</u>

Delete paragraph 1.06.B in its entirety and replace with the following:

"B. Partial, incomplete, or illegible submittals will be returned to the ELECTRICAL SUBCONTRACTOR without review for resubmittal."

ITEM 5-123: <u>Section 26 05 53 – Identification for Electrical Systems</u>

Delete paragraph 3.03.B in its entirety and replace with the following:

"B. ELECTRICAL SUBCONTRACTOR to coordinate with the Engineer and the Owner regarding exact nameplate placement during construction."

ITEM 5-124: <u>Section 26 05 60 – Low Voltage Electric Motors</u>

Delete Section 26 05 60 in its entirety and replace with the Section in Attachment Y.

ITEM 5-125: <u>Section 26 05 73 – Power System Studies</u>

Delete Section 26 05 73 in its entirety and replace with the Section in Attachment Z.

ITEM 5-126: <u>Section 26 06 11 – Cable and Conduit Schedule</u>

Delete paragraph 1.02.B in its entirety and replace with the following:

"B. The ELECTRICAL SUBCONTRACTOR shall provide all labor, materials, equipment, and incidentals as shown, specified, and required to furnish and install wires, cables and conduit complete and operational."

ITEM 5-127: Section 26 06 11 – Cable and Conduit Schedule

Delete Part 2 in its entirety and replace with the Part 2 in Attachment AA.

ITEM 5-128: Section 26 08 11 – General Electrical Testing

Delete Section 26 08 11 in its entirety and replace with the Section in Attachment AB.

ITEM 5-129: Section 26 09 16 – Electrical Controls and Relay

Delete Section 26 09 16 in its entirety and replace with the Section in Attachment AC.

ITEM 5-130: Section 26 12 19 – Pad-Mounted, Liquid-Filled, Medium Voltage Transformers

Delete Section 26 12 19 in its entirety and replace with the Section in Attachment AD.

ITEM 5-131: Section 26 13 16 – Medium Voltage Fuse Interrupter Switchgear

Delete Section 26 13 16 in its entirety and replace with the Section in Attachment AE.

ITEM 5-132: Section 26 22 00 – Low Voltage Transformers

Delete Section 26 22 00 in its entirety and replace with the Section in Attachment AF.

ITEM 5-133: Section 26 23 00 – Low Voltage Switchgear

Delete Section 26 23 00 in its entirety and replace with the Section in Attachment AG.

ITEM 5-134: Section 26 24 13 – Low Voltage Switchboards

Insert Section 26 24 13 Low Voltage Switchboards included in Attachment AH.

ITEM 5-135: Section 26 24 16 – Panelboards

Delete Section 26 24 16 in its entirety and replace with the Section in Attachment AI.

ITEM 5-136: Section 26 24 19 – Low Voltage Motor Control Centers

Delete Section 26 24 19 in its entirety and replace with the Section in Attachment AJ.

ITEM 5-137: Section 26 25 13 – Low Voltage Busways

Delete Section 26 25 13 in its entirety and replace with the Section in Attachment AK.

ITEM 5-138: Section 26 27 26 – Wiring Devices

Delete Section 26 27 26 in its entirety and replace with the Section in Attachment AL.

ITEM 5-139: Section 26 28 16.13 – Enclosed Circuit Breakers

Delete Section 26 28 16.13 in its entirety and replace with the Section in Attachment AM.

ITEM 5-140: Section 26 28 16.16 – Enclosed Switches

Delete Section 26 28 16.16 in its entirety and replace with the Section in Attachment AN.

ITEM 5-141: Section 26 29 13.13 – Low Voltage Enclosed Motor Controllers – Full Voltage

Delete Section 26 29 13.13 in its entirety and replace with the Section in Attachment AO.

ITEM 5-142: Section 26 29 13.16 – Low Voltage Enclosed Motor Controllers – Reduced Voltage

Delete Section 26 29 13.16 in its entirety and replace with the Section in Attachment AP.

ITEM 5-143: Section 26 29 23 – Low Voltage Enclosed Motor Controllers

Delete Section 26 29 23 in its entirety and replace with the Section in Attachment AQ.

ITEM 5-144: Section 26 32 13 – Engine Generators

Delete Section 26 32 13 in its entirety and replace with the Section in Attachment AR.

ITEM 5-145: <u>Section 26 33 53 – Static Uninterruptible Power Supplies</u>

Delete Section 26 33 53 in its entirety and replace with the Section in Attachment AS.

ITEM 5-146: <u>Section 26 36 13 – Manual Transfer Switch</u>

Delete Section 26 36 13 in its entirety and replace with the Section in Attachment AT.

ITEM 5-147: <u>Section 26 36 23 – Automatic Transfer Switch</u>

Delete Section 26 36 23 in its entirety and replace with the Section in Attachment AU.

ITEM 5-148: <u>Section 26 41 00 – Facility Lighting Protection</u>

Delete Section 26 41 00 in its entirety and replace with the Section in Attachment AV.

ITEM 5-149: <u>Section 26 43 13 – Surge Protection Devices</u>

Delete Section 26 43 13 in its entirety and replace with the Section in Attachment AW.

ITEM 5-150: <u>Section 26 50 00 – Lighting</u>

Delete Section 26 50 00 in its entirety and replace with the Section in Attachment AX.

ITEM 5-151: <u>Section 28 13 00 – Access Control</u>

Delete Section 28 13 00 in its entirety and replace with the Section in Attachment AY.

ITEM 5-152: <u>Section 28 23 00 – Video Surveillance</u>

Delete Section 28 23 00 in its entirety and replace with the Section in Attachment AZ.

ITEM 5-153: <u>Section 28 48 20 – Fire Alarm Systems</u>

Delete Section 28 48 20 in its entirety and replace with the Section in Attachment BA.

ITEM 5-154: Section 31 00 01 – Earthwork,

Delete Section 31 00 01 in its entirety and replace with Attachment BB.

ITEM 5-155: Section 31 23 19 – Dewatering

Delete Section 31 23 19 in its entirety and replace with Attachment BC.

ITEM 5-156: Section 31 50 00 Support of Excavation

Delete Section 31 50 00 in its entirety and replace with Attachment BD.

ITEM 5-157: Section 33 46 00 – Bioretention Cell

After 2.07.A.2, insert the following:

3. Trash rack shall be per the dimensions shown on the Contract Drawings and manufactured by Contech Engineered Solutions LLC; J.R. Hoe; Effluent Design and Fabrication, LLC or an approved equal.

ITEM 5-158: Section 40 05 07 – Pipe Supports

Delete Section 40 05 07 in its entirety and replace with Attachment BE.

ITEM 5-159: Section 40 06 20 – Process Pipe, Valve, and Gate Schedule

Add Ductile Iron Material to "Vents" in the Water Treatment Plant Pipe Schedule as follows:

V	Vent	TREATMENT BUILDING	>8" DUCTILE IRON	N/A	N/A	N/A	N/A	FLANGED	CLASS 53	NO	N/A	N/A	N/A	N/A

ITEM 5-160: Section 40 06 20 – Process Pipe, Valve, and Gate Schedule

Add row for "Sump Pump Discharge" in the Water Treatment Plant Pipe Schedule as follows:

SPD[9]	SUMP PUMP DISCHARGE	TREATED WATER MANHOLE	PVC	SOCKET	SCH 80	N/A	N/A	FLANGED[4]	SCH 80	No	15	20	25	30

ITEM 5-161: Section 40 66 00 – Network and Communication Cable and

Infrastructure

Delete paragraph 2.03.1.C in its entirety and replace with the following:

"c. No. Fibers: 12 or as indicated on the drawings, Color Coded"

ITEM 5-162: Section 43 25 17

Add section 43 25 17 in its entirety. Found in Attachment BF.

RESPONSES TO BIDDER QUESTIONS

Number	Question	Response
5-Q1	1. Specification 00 73 00 – Supplementary Conditions SC-2.01: Will SWSC accept a revision to RFP Section SC-2.01 to acknowledge SWSC's responsibility as a generator, treater, storer or disposer of pre-existing hazardous or toxic substances found on site or any hazardous or toxic substances required by the Contract Documents? While we are willing to assume responsibility for all hazardous or toxic substances it creates or releases in connection with, or brings to, the Project, it will not be in a position to bid the project unless SWSC confirms: (1) that SWSC acknowledge SWSC's responsibility as a generator, treater, storer or disposer of pre-existing hazardous or toxic substances found on site and, (2) SWSC will indemnify and hold harmless the Contractor for all losses, damages and expenses arising out of the presence or removal of any hazardous or toxic substances required by the Prime Contract or any pre-existing hazardous or toxic substances found on site. We further expect that no surety or insurance provider would guarantee this project with the language as it currently stands, which could result in no contractor bids on the project.	This condition is revised. See Addendum 5 Item 5-6.

5-Q2	Section 27 51 16 - Public Address Systems: a. The specifications state that the EC is responsible for the PA system, No Prints that shows PA equipment can be found. b. Is the EC responsible for conduit and pull strings only? c. Can you supply prints with speaker locations and equipment riser?	Paging system will not be required at this time.
5-Q3	Drawing C-314 – Clarify if precast concrete curb is acceptable in lieu of cast-in-place curb as detailed.	Precast curb is not acceptable and cast-in-place curb shall be constructed as indicated in the contract documents.
5-Q4	Section 00 73 00 (Supplementary Conditions) – Clarify the following; a. Article 2.01.B.2 - Revise so that SWSC will be the Generator of all Hazardous and Contaminated material that requires off-site disposal.	This condition is revised. See Addendum 5 Item 5-6.
5-Q5	Section 00 73 00 (Supplementary Conditions) – Clarify the following; b. Article 14.01.C - The Mobilization payment limits as defined are inadequate. The initial Bonds and Insurance will exceed the 1% initial payment by a significant amount. Please revise to be more appropriate.	Mobilization payments increased to 4%. Refer to Addendum 5 Items 5-7 and 5-14.
5-Q6	Section 04 00 00, Paragraph 1.02.E.2 (Staging, Planking and Scaffolding) – This paragraph places the requirement for providing scaffolding that would be necessary to access work above 8'-0" on someone other than the Masonry Filed Sub-Bidder. The decision to utilize scaffolding, as opposed to platform lifts, to provide access to work belongs with the trade performing the work. Separating this responsibility creates an unnecessary coordination and liability problem. Please delete this requirement and make providing access to the work of the Filed Sub-Bidder the responsibility of the same Filed Sub-Bidder.	Proposed change is received but is not accepted. Per the specifications, the General Contractor shall be responsible for coordinating scaffolding between trades and for construction of staging and scaffolding over 8 feet.
5-Q7	The terms "Filed Sub-Bid Contractor", "Filed Sub-Bid" and "Contractor" are used interchangeably in Sections 04 05 16 through 04 43 00. Confirm all three terms, in the context of specification sections 04 05 16 through 04 43 00, refer to the Preselected Filed Masonry Sub-Bidder.	Sections clarified in Addendum 5 Items 5-32 through 5-43, items 5-45 through 5-46, and items 5-48 through 5-49.

5-Q8	The terms “Filed Sub-Bid Contractor”, “Filed Sub-Bid” and “Contractor” are used interchangeably in Sections 05 14 00, 05 51 00, 05 51 33, 05 52 00, 05 53 00 and 05 55 00. Confirm all three terms, in the context of specification sections 05 14 00, 05 51 00, 05 51 33, 05 52 00, 05 53 00 and 05 55 00, refer to the Preselected Filed Misc. Metals Sub-Bidder.	Sections clarified in Addendum 5 Items 5-53 through 5-60.
5-Q9	Section 05 50 00 – Should this section be furnished and installed as part of the Misc. Metal Filed Sub Bid?	05 50 00 includes lintels and bollards. The Masonry FSB is responsible for providing and installing lintels. The GC is responsible for providing and installing bollards.
5-Q10	Drawing A-002, Note 05 51 00.1 (Enclosed Stair) – States to provide a non-slip flooring aggregate to concrete surfaces for the metal pan stairs. Detail 15 on drawing A-011 shows a non-slip nosing at landings and treads. Please clarify if both the non-slip flooring aggregate and non-slip nosings are required at all metal pan treads and landings.	Both non-slip floor aggregate and non-slip nosing are required at all metal pan treads and landings.
5-Q11	Drawing A-002, Note 05 51 00.2 (Open Stair) – Please clarify if the Misc. Metals Filed Sub Bid is required to furnish and install the wood treads and landings required or should this be part of the GC bid.	The GC is responsible for furnishing and installing the wood treads and landings.
5-Q12	Drawing A-005, Detail 2 – Are the steel lintels at the scupper openings in parapets required to furnished and installed as part of the Misc. Metal Filed Sub Bid or should they be furnished by the Misc. Metal Filed Sub Bid and installed by the Masonry Filed Sub Bid?	The Masonry FSB is responsible for providing and installing lintels as part of masonry work.
5-Q13	Drawing A-009, Wall Type 5 – Is the continuous SS mounting bracket for the removable fire rated wall panel to be furnished and install by the Misc. Metal Filed Sub Bid?	The GC is responsible for providing and installing SS mounting bracket for the removable fire rated wall panel.
5-Q14	Drawing A-015 Details 3 and 10 – Are the steel lintels and jamb angles for exterior doors to be furnished and installed as part of the Misc. Metal Filed Sub Bid or should they be furnished by the Misc. Metal Filed Sub Bid and installed by the Masonry Filed Sub Bid?	The Masonry FSB is responsible for providing and installing steel lintels and jamb angles as part of masonry work.

5-Q15	Drawing A-015, Detail 5 – Are the steel lintels and jamb angles for roll-up doors to be furnished and installed as part of the Misc. Metal Filed Sub Bid or should they be furnished by the Misc. Metal Filed Sub Bid and installed by the Masonry Filed Sub Bid?	The Masonry FSB is responsible for providing and installing steel lintels and jamb angles as part of masonry work.
5-Q16	Drawing A-015, Detail 5 – Are the SS jamb cover plates to be furnished and install as part of the Misc. Metal Filed Sub Bid?	The GC is responsible for providing and installing the SS jamb cover plates.
5-Q17	Drawing A-017, Details 2, 3 and 5 - Are the steel lintels and jamb angles for the exterior windows to be furnished and installed as part of the Misc. Metal Filed Sub Bid or should they be furnished by the Misc. Metal Filed Sub Bid and installed by the Masonry Filed Sub Bid?	The Masonry FSB is responsible for providing and installing steel lintels and jamb angles as part of masonry work.
5-Q18	Drawing A-018, Detail 1 - Are the steel lintels, jamb angles and sill angle for the translucent wall panel to be furnished and installed as part of the Misc. Metal Filed Sub Bid or should they be furnished by the Misc. Metal Filed Sub Bid and installed by the Masonry Filed Sub Bid?	The Masonry FSB is responsible for providing and installing steel lintels and jamb angles as part of masonry work.
5-Q19	Drawing A-019, Detail 2 - Are the steel lintels and jamb angles for the exterior louvers to be furnished and installed as part of the Misc. Metal Filed Sub Bid or should they be furnished by the Misc. Metal Filed Sub Bid and installed by the Masonry Filed Sub Bid?	The Masonry FSB is responsible for providing and installing steel lintels and jamb angles as part of masonry work.
5-Q20	Drawing A-1705, Detail 5 and Drawing S-1704, Note 3 – Is the stone relief angle to be furnished and installed as part of the Misc. Metal Filed Sub Bid?	The Masonry FSB is responsible for providing and installing stone relief angles as part of masonry work.
5-Q21	Drawing A-1705, Detail 8 and Drawing S-1704, Notes 1 and 2 – Are the curtainwall relief support angles to be furnished and installed as part of the Misc. Metal Filed Sub Bid?	The General Contractor is responsible for providing and installing the curtainwall relief support angles.
5-Q22	Drawing A-2601 – Are the masonry relief angles to be furnished and installed as part of the Misc. Metal Filed Sub Bid or should they be furnished by the Misc. Metal Filed Sub Bid and installed by the Masonry Filed Sub Bid?	The Masonry FSB is responsible for providing and installing masonry relief angles as part of masonry work.
5-Q23	Drawing S-002 and S-007, Masonry Wall to Concrete Beam Connection – Are the steel plates furnished and installed as	The Masonry FSB is responsible for providing and installing steel plates for Masonry Wall to Concrete Beam

	part of the Misc. Metal Filed Sub Bid or should they be furnished by the Misc. Metal Filed Sub Bid and installed by the Masonry Filed Sub Bid?	Connection. Plate is part of integrity of masonry wall.
5-Q24	Drawing S-007, Interior Masonry Wall to Precast Plank Connection – Are the steel plates furnished and installed as part of the Misc. Metal Filed Sub Bid or should they be furnished by the Misc. Metal Filed Sub Bid and installed by the Masonry Filed Sub Bid?	The Masonry FSB is responsible for providing and installing steel plates for Masonry Wall to Concrete Beam Connection. Plate is part of integrity of masonry wall.
5-Q25	Drawing S-009, Lifting Hook – Are the lifting hooks to be furnished and installed as part of the Misc. Metal Filed Sub Bid?	The GC is responsible for furnishing and installing Lifting Hook.
5-Q26	Drawing M-102 – Are the SS weir plates to be furnished and installed as part of the Misc. Metal Filed Sub Bid?	The Miscellaneous Metals FSB is responsible for furnishing and installing SS weir plates. Refer to Addendum 5 Item 5-1.
5-Q27	Drawing S-1704, Detail 4 – Are the screen supports (HSS 6 x 6) to be furnished and installed as part of the Misc. Metals Filed Sub Bid?	The GC is responsible for furnishing and installing screen supports (HSS 6x6).
5-Q28	Drawing S-1704, Detail 3 – Are the rail bracket supports (HSS 8 x 8) for the elevator to be furnished and installed as part of the Misc. Metals Filed Sub Bid?	The GC is responsible for furnishing and installing rail bracket supports (HSS 8x8).
5-Q29	The terms “Filed Sub-Bid Contractor”, “Filed Sub-Bid” and “Contractor” are used interchangeably in Sections 07 13 54, 07 26 16, 07 90 00 and 07 95 00. Confirm all three terms, in the context of specification sections 07 13 54, 07 26 16, 07 90 00 and 07 95 00 refer to the Preselected Filed Waterproofing, Damproofing and Caulking Sub-Bidder.	Sections clarified in Addendum 5 Items 5-62, 5-74 and 5-75.
5-Q30	The terms “Filed Sub-Bid Contractor”, “Filed Sub-Bid” and “Contractor” are used interchangeably in Sections 07 50 00,07 60 00 and 07 70 00. Confirm all three terms, in the context of specification sections 07 52 00, 07 60 00 and 07 70 00 refer to the Preselected Filed Roofing and Flashing Sub-Bidder.	Sections clarified in Addendum 5 Items 5-65, 5-69 through 5-71.
5-Q31	Section 08 40 00, Paragraph 1.02.D.2 (Staging, Planking and Scaffolding) – This paragraph places the requirement for providing scaffolding that would be necessary to access work above 8’-0” on someone other than the Metal Windows Filed Sub-Bidder. The decision to utilize scaffolding, as opposed to platform lifts,	Proposed change is received but is not accepted. Per the specifications, the General Contractor shall be responsible for coordinating scaffolding between trades and for construction of staging and scaffolding over 8 feet.

	to provide access to work belongs with the trade performing the work. Separating this responsibility creates an unnecessary coordination and liability problem. Please delete this requirement and make providing access to the work of the Filed Sub-Bidder the responsibility of the same Filed Sub-Bidder.	
5-Q32	The terms “Filed Sub-Bid Contractor”, “Filed Sub-Bid” and “Contractor” are used interchangeably in Sections 08 41 13 and 08 44 13. Confirm all three terms, in the context of specification sections 08 41 13 and 08 44 13 refer to the Preselected Filed Metal Windows Sub-Bidder	Sections clarified in Addendum 5 Items 5-78 through 5-80.
5-Q33	Section 08 41 13, paragraph 2.02.E – States to provide glazing to meet requirements of Section 08 81 03 (Glass, Plastic and Glazing). Section 08 81 03 is not listed in Section 08 40 00 (Metal Windows Filed Sub Bid). Please confirm any glazing for aluminum storefronts and entrances per Section 08 41 13 are to be furnished and installed as part of the Metal Windows Filed Sub Bid.	Glazing to be furnished and installed as part of the specified Curtain Wall assemblies to meet the requirements of Section 08 81 03. Refer to clarification in Section 08 40 00 in Addendum No. 5.
5-Q34	Section 08 44 13, paragraph 2.02.E – States to provide glazing to meet requirements of Section 08 81 03 (Glass, Plastic and Glazing). Section 08 81 03 is not listed in Section 08 40 00 (Metal Windows Filed Sub Bid). Please confirm any glazing for aluminum curtain walls per Section 08 44 13 are to be furnished and installed as part of the Metal Windows Filed Sub Bid.	Glazing to be furnished and installed as part of the specified Curtain Wall assemblies to meet the requirements of Section 08 81 03. Refer to clarification in Section 08 40 00 in Addendum No. 5.
5-Q35	Section 09 20 00, Paragraph 1.02.D.2 (Staging, Planking and Scaffolding) – This paragraph places the requirement for providing scaffolding that would be necessary to access work above 8’-0” on someone other than the Lathing and Plaster Filed Sub-Bidder. The decision to utilize scaffolding, as opposed to platform lifts, to provide access to work belongs with the trade performing the work. Separating this responsibility creates an unnecessary coordination and liability problem. Please delete this requirement and make providing access	Proposed change is received but is not accepted. Per the specifications, the General Contractor shall be responsible for coordinating scaffolding between trades and for construction of staging and scaffolding over 8 feet.

	to the work of the Filed Sub-Bidder the responsibility of the same Filed Sub-Bidder.	
5-Q36	Section 09 30 00, Paragraph 1.02.D.2 (Staging, Planking and Scaffolding) – This paragraph places the requirement for providing scaffolding that would be necessary to access work above 8'-0" on someone other than the Tile Filed Sub-Bidder. The decision to utilize scaffolding, as opposed to platform lifts, to provide access to work belongs with the trade performing the work. Separating this responsibility creates an unnecessary coordination and liability problem. Please delete this requirement and make providing access to the work of the Filed Sub-Bidder the responsibility of the same Filed Sub-Bidder.	Proposed change is received but is not accepted. Per the specifications, the General Contractor shall be responsible for coordinating scaffolding between trades and for construction of staging and scaffolding over 8 feet.
5-Q37	The terms "Filed Sub-Bid Contractor", "Filed Sub-Bid" and "Contractor" are used interchangeably in Section 09 30 00. Confirm all three terms, in the context of specification section 09 30 00 refer to the Preselected Filed Tiling Sub-Bidder.	Sections clarified in Addendum 5 Items 5-88 through 5-90.
5-Q38	Section 09 51 00, Paragraph 1.02.D.2 (Staging, Planking and Scaffolding) – This paragraph places the requirement for providing scaffolding that would be necessary to access work above 8'-0" on someone other than the Acoustical Ceiling Filed Sub-Bidder. The decision to utilize scaffolding, as opposed to platform lifts, to provide access to work belongs with the trade performing the work. Separating this responsibility creates an unnecessary coordination and liability problem. Please delete this requirement and make providing access to the work of the Filed Sub-Bidder the responsibility of the same Filed Sub-Bidder. Clarify the following regarding the Resilient Flooring Filed Sub Bid:	Proposed change is received but is not accepted. Per the specifications, the General Contractor shall be responsible for coordinating scaffolding between trades and for construction of staging and scaffolding over 8 feet.
5-Q39	The terms "Filed Sub-Bid Contractor", "Filed Sub-Bid" and "Contractor" are used interchangeably in Section 09 65 00. Confirm all three terms, in the context of specification section 09 65 00	Sections clarified in Addendum 5 Item 5-91.

	refer to the Preselected Filed Resilient Flooring Sub-Bidder.	
5-Q40	Section 09 90 00, Paragraph 1.02.D.2 (Staging, Planking and Scaffolding) – This paragraph places the requirement for providing scaffolding that would be necessary to access work above 8'-0" on someone other than the Painting Filed Sub-Bidder. The decision to utilize scaffolding, as opposed to platform lifts, to provide access to work belongs with the trade performing the work. Separating this responsibility creates an unnecessary coordination and liability problem. Please delete this requirement and make providing access to the work of the Filed Sub-Bidder the responsibility of the same Filed Sub-Bidder.	Proposed change is received but is not accepted. Per the specifications, the General Contractor shall be responsible for coordinating scaffolding between trades and for construction of staging and scaffolding over 8 feet.
5-Q41	The terms "Filed Sub-Bid Contractor", "Filed Sub-Bid" and "Contractor" are used interchangeably in Section 09 90 00. Confirm all three terms, in the context of specification section 09 90 00 refer to the Preselected Filed Painting Sub-Bidder.	Sections clarified in Addendum 5 Items 5-92 through 5-94.
5-Q42	Section 22 02 00, Paragraph 1.01.F.2 (Staging, Planking and Scaffolding) – This paragraph places the requirement for providing scaffolding that would be necessary to access work above 8'-0" on someone other than the Plumbing Filed Sub-Bidder. The decision to utilize scaffolding, as opposed to platform lifts, to provide access to work belongs with the trade performing the work. Separating this responsibility creates an unnecessary coordination and liability problem. Please delete this requirement and make providing access to the work of the Filed Sub-Bidder the responsibility of the same Filed Sub-Bidder.	Proposed change is received but is not accepted. Per the specifications, the General Contractor shall be responsible for coordinating scaffolding between trades and for construction of staging and scaffolding over 8 feet.
5-Q43	Confirm that all hoisting, platforms, lifts or scaffolding necessary to complete the work of the Fire Protection Filed Sub-Bidder is by the Fire Protection Subcontractor.	The Fire Protection Filed Sub-Bidder will be responsible for furnishing all hoisting activities and mobile lifting equipment, regardless of elevation. The Fire Protection Filed Sub-Bidder will be responsible for provision of non-mobile staging, planking, and scaffolding up to 8ft whereas the General Contractor will be responsible for furnishing non-mobile

		staging, planking, and scaffolding above 8ft as clarified in Addendum 5 Item 97.
5-Q44	Section 23 00 00, Paragraph 1.01.F.2 (Staging, Planking and Scaffolding) – This paragraph places the requirement for providing scaffolding that would be necessary to access work above 8'-0" on someone other than the HVAC Filed Sub-Bidder. The decision to utilize scaffolding, as opposed to platform lifts, to provide access to work belongs with the trade performing the work. Separating this responsibility creates an unnecessary coordination and liability problem. Please delete this requirement and make providing access to the work of the Filed Sub-Bidder the responsibility of the same Filed Sub-Bidder.	Proposed change is received but is not accepted. Per the specifications, the General Contractor shall be responsible for coordinating scaffolding between trades and for construction of staging and scaffolding over 8 feet.
5-Q45	Drawing E-1222 – Canopy lighting design is not coordinated with Architectural drawings.	Canopy lighting is now coordinated with Architecture.
5-Q46	Section 00 73 00 Article 6.02.A.3 – Please revise this section to conform to the process for release of retention and creation of a monetized punch-list as specified in MGL Chapter 30 Section 39K (00 73 00B-6).	Paragraph revised. See Addendum Item 4-11.
5-Q47	General Conditions 00 72 00: We respectfully request that Article 13.07D be removed from the contract as it creates an evergreen warranty. Evergreen warranty would add significant cost to the project and would be unenforceable to several subs/vendors.	13.07D states the following: "Where defective Work (and damage to other Work resulting therefrom) has been corrected or removed and replaced under this Paragraph 13.07, the correction period hereunder with respect to such Work will be extended for an additional period of one year after such correction or removal and replacement has been satisfactorily completed." This is not an Evergreen Warranty, and has a clearly defined correction/warranty periods.
5-Q48	Section 00 73 00 1. SC 5.03: We respectfully Request a revision that requires owner to provide Certificates or other evidence of insurance Owner is required to purchase and maintain. 2. SC 6.07: We respectfully Request reinsertion of GC Articles 6.07 A, 6.07B,	1. As per the Supplemental Conditions, there is no Owner requirement for purchasing or furnishing insurance. 2. Request denied. 3. Request denied.

	6.07C (which deleted Owner's obligation to indemnity for patent infringement) or comparable language providing mutual indemnity for patent infringement. 3. SC 6.19A: We respectfully Request a revision to replace the word "guaranteeing" with "stating" that the materials …conform to specification requirements.	
5-Q49	Sectio 00 73 00 SC 7.02 D a. We respectfully Request a revision to limit Contractor's indemnity for damages to the extent damages are caused by Contractor instead of any claim "arising from Contractor's performance of the Work." b. We respectfully Request deletion of SC 7.02 D language that Contractor's "sole remedy … will be an extension of time in accordance with Article 12.2.	a. Section 7.02 of the general conditions was deleted in its entirety per SC-7.02. Regarding any potential changes to SC 7.03, no revisions will be made at this time. b. Section 7.02 of the general conditions was deleted in its entirety per SC-7.02. Regarding any potential changes to SC 7.03, no revisions will be made at this time.
5-Q50	Section 00 73 00 SC 12 B: Request reinsertion of GC 12.03 B or comparable language to allow for compensability of delays caused by entities other than Contractor.	Request denied.
5-Q51	Section 0073 00 SC 15.02 D: We respectfully Request reinsertion of GC 15.02 D or comparable language allowing contractor a reasonable period to commence a cure to avoid termination.	Request denied.
5-Q52	We respectfully Request that a mutual waiver of consequential damages be included in the contract.	Request denied.
5-Q53	Section 00 73 00 SC 11.01 – We respectfully request that you remove the following added language "No claims for extra cost shall be considered based on escalation of materials costs throughout the period of the contract" or add further language to allow for payment of costs related to escalation if the escalation is proven to be related to government actions, events described in AC12.03C or Owner delays to portions of the work that do not extend the overall period of the contract.	Request denied.

5-Q54	Section 00 73 00 We respectfully request that you reinstate article 11.01.A.5.f into the contract.	Request denied.
5-Q55	Section 00 73 00 We respectfully request that SC-14.01C and Specification 01-20-00-2 be modified to allow for a total mobilization payment of 5% of the contract price and that said mobilization be made in two installments equal to 50% of the total mobilization amount to be paid upon contractor furnishing bonds and insurance and the remaining 50% to be paid when the work is 5% complete as indicated in the approved progress payments.	Mobilization payments increased to 4%. Refer to Addendum 5 Items 5-7 and 5-14.
5-Q56	Please confirm that a file sub-bidder can invoice and receive payment for stored material	Confirmed.
5-Q57	please confirm if this project requires a state electrical permit fee.	Electrical permit fees are not waived.
5-Q58	Please see attached. 00 40 02 - 1.01.A.7.a-f do I need to have this information with the bid A-F? Please advise?	Refer to Addendum 4 Items 4-9 and 4-10.
5-Q59	Section 11 11 36 (Commercial Electric Charging Units) – The Charging Stations must be installed by a Massachusetts Licensed Electrical Contractor. Please add this section to the Electrical Filed Sub-Bidders scope of work.	Specification 26 05 00 section 1.04 has been updated to reflects that information.
5-Q60	2. Per drawing C-251 and Temporary Treated Water Transmission Main: a. Due to this being a temporary line, do the valves and pipe need to meet AIS requirements? b. Due to the butterfly valve deliveries, 38-48 weeks after release, the temporary piping tie-ins 1-4 more than likely will be forced outside of the November 2024 - April 2025 shutdown window, if this happens, can these tie-ins be made outside of that window? If we cannot connect outside of this first window then the project duration needs to be extended due to the work being pushed into the November 2025-April 2026 window. c. As alternative, if the valves aren't available in time for the shutdown for tie-	a.. All materials procured under this contract must meet AIS requirements. b. No work for the treatment plant may take place until tie-ins 1-4 are complete, and no exception may be taken to the time of year requirements. If the contractor is limited by lead times or availability for valves, alternative methods of isolation can be considered and evaluated as part of the shop drawing review. c. See response to part c. d. Correct.

	in 4 can a line stop be used to isolate for tie-in and then have the valve installed when delivered? d. Tie-in 1 details installation of a 42" valve	
5-Q61	Drawing E-2102 Note #1 states that "No electrical work on this sheet, but the cable and conduit schedule states that the electrical contractor is the run conduit and wire to the FLOC disconnect and FLOC Please advise.	FLOC disconnects shown on drawing E-2302 (EL. 485).
5-Q62	Drawing 1201,1202,1301 & 11302 have receptacles with an "A" next to it. What does the "A" mean?	"A" designates receptacles mounted horizontally at 42" AFF above countertop, sinks or other equipment.
5-Q63	Drawing 1201 has multi outlet with raceway set-ups. Are these outlets and raceway by the furniture vendor or are they by the electrical contractor? If they are by the electrical contractor, please provide the type you would like (plastic, metal, or stainless steel, plus raceway size 2300, 3000, 4000 etc.)?	Furnish and install Legrand V2400 Series/Wiremold 3000 series/Hubbell HBLALU3800 series or Monosystems steel raceway for the multi outlets shown above counters. The raceway shall have duplex receptacles with a 1'-6" spacing.
5-Q65	Drawing C-007 identifies the limits of disturbance allowed on the site. There is a depressed area north of the existing Backwash Tank and Pumping Station that is outside of the identified limits of allowable disturbance. The site has limited stockpile and laydown areas available. Can this area be made available to the Contractor?	The Contractor shall bid the project with current limit of disturbance which does not include the area north of the BWT and PS.
5-Q66	Section 01 20 00 (Measurement & Payment) Bid Items 400519.1 through 400524.4 have significant pay item description issues. Can these Bid Items be deleted and the work included in Lump Sum Bid Item 011100.1? Examples of the deficiencies include, but are not limited to; a. The specific lay lengths of pipe shown on the drawings differ from the quantities listed on the bid form. What should we bid to? b. Some of the 60" and 72" RW pipe is concrete encased. Should these unit prices include the concrete encasement? c. Off-sets and bends are more expensive to install than straight runs of pipe. Should we assume that only straight runs of pipe are included in the	The bid items 400519.1 through 400524.4 have been deleted. Refer to Addendum 5 Item 5-14.

	Bid Item? d. Would the below slab, concrete encased pipe be included in these pay items? e. It is impossible to separate dewatering cost for each of these pay items as requested. f. It is extremely difficult (bordering impossible) to separate the cathodic protection, temporary surface repair, location of underground utilities, connection to existing utilities, permanent surface restoration and the support of existing utilities into each of these pay items as requested. If the answer to the above question is no, that we should bid as described in the specifications, please allow a minimum of one week after receipt of the answer so that we can forward more specific questions on this topic.	
5-Q67	Drawing C-130, note 4 clarifies the limits of the Plumbing storm water pipe installation. Would the Plumbing Filed Sub-Bidder be responsible for concrete encasing their pipe?	Plumbing drainage piping below the foundation slab, or extending beyond the building footprint, is not specified to be encased.
5-Q68	Drawing S-2714 section J – clarify the following: a. The vertical grout fill is shown with dowel spacing 8"OC at the top of the fill. Is this 8"OC both horizontally and vertically throughout the entire fill? b. Would the bottom slab fills also require doweling?	a. The vertical grout fill requires dowel spacing 8" OC at the top of fill for each placement. The dowels are required in the horizontal direction only. b. The fill located directly above the bottom slab does not require any dowels.
5-Q69	27 51 16-1.03 Public Address System Supplier, section A notes Acceptable PA System shall be manufactured by Associated Engineered Systems of Hazelwood Missouri or equal. We contacted AES of Hazelwood and they noted they are not interested in this project due to the location. Please provide an alternate manufacturer for a Basis of Design.	Paging system will not be required at this time.
5-Q70	27 51 16-2.01.A: It is noted "The PA System configuration shown in Exhibit 16770-1 depicts overall system configuration requirements". Can you please provide this exhibit referenced?	Please disregard. Paging system will not be required at this time.

5-Q71	Public Adress Systems are specified in 27 51 16. The system is not called out on the plans showing speaker locations and phones. There are Fire Alarm plans showing the audio/visible horns for fire alarm which are specified in 28 46 20 and shown on E-2540 to E-2540. The Security plans E-2560 to 2562 show the cameras for the security system, no speakers as well. Please provide plans showing the Public Address System requirements per 27 51 16	Paging system will not be required at this time.
5-Q72	27 51 16 - section 2.01.C: it is noted "The facility phone system shall be provided by the Owner". Please verify this is correct.	Confirmed.
5-Q73	Commercial Electric Vehicle Charging Units (3 total) per 11 11 36.13 are referenced on L-104. E-1804 shows the ductbank to these (3) locations, but no details are provided showing the EV charger, bollard and foundation needed for mounting. Spec 11 11 36.13-3.01.B notes that the foundation is to be 12" dia and 48" deep for these charger units. Please provide a detail for these chargers showing the charger units w/ bollard for mounting and foundation.	Refer to section spec 11 11 36 for EV charger details
5-Q74	28 46 20 Fire Alarm Systems, section 1.01.B: it is noted that the Electrical Contractor (EC) shall hire a licensed Professional Engineer, certified in fire protection in the state or commonwealth in which the project is located, to review the requirements of this section and design a fire alarm system...". It is also noted in 1.01.D of this spec, that "the EC shall include in his bid all costs for the fire alarm system, as well as all the necessary conduit, wire, supports, installation, etc". Is the Electrical Contractor to include this work in their bid or are they only to include conduits/raceways for the Fire Alarm system? Or is the system to be designed/installed by others?	EC shall provide design and installation of a complete fire alarm system as specified. The devices and riser diagrams provided in the bidding documents are intended to aid in the understanding of scope and costing of the system.
5-Q75	Section 27 51 16 - Public Address Systems Please confirm that the fire alarm, PA system, CCTV, Security. Communication	Confirmed. The fire alarm, CCTV, Security and Communication systems are in the scope of the Electrical filed sub- bidder. PA Systems are not required at this time.

	systems are in the EC scope and will be carried by the file sub- bidder.	
5-Q76	Specifications 01 51 00 1.03 System description. Confirm that the term contractor in sub sections A & B is the electrical contractor and that the EC is responsible for providing and installing as defined in this section. Please provide the number of trailers that we are to power.	Refer to Addendum 5 Item 5-15 and 5-16. Construction Facilities are specified in Section 01 52 00.
5-Q77	Specification 01 55 00-4 8.b.4. Please provide a description of chlorine training for all contractors' staff. a. What will this consist of? b. Confirm that delivery personnel will be required to receive this training. c. What is the duration of the training? d. Are there any associated costs to the file-subcontractors for this training?	a. Training consists of a review of chlorine safety and emergency evacuation procedures. Training will be required for personnel working on site. b. Training is not required for delivery personnel. C. Training is approximately 10 minutes long d. Filed sub bidders will need to participate in the training, but there is no additional cost.
5-Q78	Which contractor is responsible for removal and disposal of light fixture ballasts and lamps? And any cost associated.	The Electrical contractor is responsible for removal and disposal of light fixtures, ballasts, lamps and all associated costs.
5-Q79	On print E-012 new HH # 1C. Can you call out what conductors and conduit enter and exit the HH.	See duct bank detail DB-20 on drawing E-016 and C&C schedule for conduit entering and exiting HH #1C.
5-Q80	On print E-012 new HH # 1A. Can you call out where the fiber is extending to? And the conduit size exiting the HH.	See duct bank detail DB-20 on drawing E-016 and C&C schedule for conduit entering and exiting HH #1A.
5-Q81	Specifications section 33-71-19 Underground electrical. Is not referenced in Division 26, and this section has multiple disciplines scope included. Please clarify the EC scope	Refer to specification 33 71 19 re-issued in Addendum #4.
5-Q82	Please provide more info on the canopy lights shown on drawings E-1221 & E-1222 and confirm they will be provided by the canopy contractor. B263:K264	Canopy manufacturer shall furnish and install the circular down lights, the linear lights LC10 and LW10 are furnished and installed by the electrical contractor. Electrical contractor shall make all final electrical connections for the canopy. Refer to the revised drawing E-1222 for drawings changes. Refer to spec section 26 50 00 for revision to fixture LW10 and added fixture LC10.
5-Q83	Drawing E-005 shows stanchion mounting procedures for light fixtures, please advise if the EC is responsible for	Stanchion mount for pole light fixtures are not applicable on this project and shall be omitted. Disregard detail E-26-0603.

	supplying stanchion materials and installing them.	
5-Q84	Please provide the location of gate # 4 and # 5 on the site drawing	Gates 4 and 5 are called out throughout the set. See the overall site plans C-001, C-007 through C-010. Also called out on applicable drawings where these areas are shown.
5-Q85	Please confirm that the car chargers in division number 11 are not being purchased and installed by the EC.	EC (Electrical Filed Sub-Bidder) shall include purchase and installation of EVSE in accordance with drawings and specification 11 11 36.13.
5-Q86	Section 26 06 11 Conduit and Cable schedule Need panel ID for the gates are being feed from for P-023, P-023.1 & P-024	Gates will be fed from panel LP-1A-ADM.
5-Q87	P-048 to P-290 states that RGC is to be used but Drawing E-0210 to E-0240 states that the administration area is classified as “Indoor dry non-process area” which is also stated in Section 26 05 33.13-17. Section 26 05 33.13-18 states that EMT can be used in “concealed above suspended ceiling” and “concealed within interior walls constructed of metal stud's and gypsum wall board”. Can EMT be used in the Administration building Area 1 & 2 or should it be all RGC?	EMT may be provided in accordance with specification 26 05 33.13.
5-Q88	Please clarify the locations of the following devices. They are called out in the administration building as stated in the cable and conduit schedule but cannot be found. Or are they in other areas i. P-142 ii. P-143 iii. P-143.1 iv. P-143.2 v. P-143.3 vi. P-170 vii. P-171 viii. P-172 ix. P-173 x. P-211 xi. P-212 xii. P-212.1 xiii. P-212.2 xiv. P12.3 xv. P-223 xvi. P-231,1	P-142, P-143 devices located on drawing E-1202. P-143.1, P-143.2, P-143.3 tags will be added. P-170 - P-173 devices located in laboratory and microlab on drawing E-1201. P-211 located in room 1320 on drawing E-1301 P-212 located in room 1331 on drawing E-1301 P-212.1 - P-212.3 tags will be added. P-223 will be removed, location of device is in dewatering building. P-231.1, P-232 - P-234 are located on drawing E-1401. P-266 - P-290 are located in room 1323 and room 1324 on drawing E-1301.

	xvii. P-232 xviii. P-233 xix. P-234 xx. P-266 to P290	
5-Q89	Please confirm that expansion fittings will be required in accordance with Conduit for electrical systems. Section 3.04 Conduit Fittings use and applications. 26-05 33 13-21	Confirmed.
5-Q90	In section conduit fitting and applications – 25 05 13 13-21. Please confirm that Meyers hubs are required in all panels that are NEMS 4, NEMA 4X and 3r	Hubs are required as specified.
5-Q91	On the site electrical drawing. Are the hand holes call out on the drawing manholes as called out in the conduit and conductor schedule	Where indicated as 'HH' provide hand-holes in accordance with drawings and specifications (see particularly 33 71 19)
5-Q92	Please locate the roll up generator can box on the site electrical	See "4000A MTS" on the Electrical Site Plan.
5-Q93	Please clarify the controls for the generator. They do not appear in the conduit and conductor schedule.	Controls for generator appear in C&C schedule labeled with conduit number C-475.
5-Q94	Please provide the required sizes of handholes	Where indicated as 'HH' provide hand-holes in accordance with drawings and specifications (see particularly 33 71 19)
5-Q95	In the duct bank schedule (E-014). Please locate DB-1 on the site plan	DB-1 is located at the existing utility pole in the southern part of the site plan.
5-Q96	There are several handhole on site that have a cast iron rim and cover. Will these be required on this project and please call out their location.	Where indicated as 'HH' provide hand-holes in accordance with drawings and specifications (see particularly 33 71 19)
5-Q97	Specification 26 05 33.13 3.01 M states that Liquid containment areas are indicated on the drawings. We cannot locate the words “Liquid Containment" on any of the drawings. Please call out all areas that are “liquid Containment areas” and where conduits cannot penetrate slabs/floors.	Chemical storage/transfer areas shall be considered 'liquid containment' areas per 26 05 33.13 para. 3.01(M).
5-Q98	Specification 26 05 00 2.04 A: Please confirm that rubber matting is to be provided and installed by the EC as listed within this specification.	Confirmed.
5-Q99	Confirm that Rigid Galvanized Conduit is to be installed exposed within installation area designation no.3. Including exposed within electrical rooms.	Confirmed.
5-Q100	In the conduit and cable schedule – please clarify P-625. Is it PP-1 or should it be PP-1-TB?	It should be PP-1-TB, see updated C&C schedule.

5-Q101	In the conduit and cable schedule – please clarify. P-314 – Does P-33010 need a disconnect?	This pump (P-33010) does not need a disconnect switch.
5-Q102	On drawing E-2105 Can not find the following in the Cable and conduit schedule - FIT-46025, ZSC/ZSO-10311 trough ZSC/ZSO-10314	Conduit for ZSO-10311 through ZSO-10314 are labeled with conduit numbers C-071 through C-074 in the C&C schedule. Cable and conduit not needed for FIT-46025.
5-Q103	In the HVAC spec it talks about us owning coating all copper pipe with a corrosion resistant coating but doesn't specify what areas, like in the plumbing spec. Is it for all areas or can you tell us which areas this is needed?	Paragraph 3.01.U will be updated to reflect locations where protective coating is required for copper hydronic piping.
5-Q104	I wanted to touch base to make sure no other chemical tanks will be accepted aside from Poly Processing.	Poly Processing HDPE tanks are specified for the integrally molded full drain outlets. Other manufacturers will be evaluated for "as equal" consideration during the submittal process.
5-Q105	Under specification section 230900-1.12.A, three manufacturers for temperature controls are explicitly listed, as well as "or equal." Please confirm, is Siemens considered an equivalent manufacturer of the DDC temperature controls system described in 230900?	This question cannot be answered as part of a bidder question. It is the responsibility of the bidder to determine if Siemens can provide a system that meets all of the specified requirements without requiring exceptions or relief.
5-Q106	Drawings A-006 (detail 8) and A-005 (detail 7) - Please confirm the wood blocking shown on these typical details are considered a "wood nailing strip" as defined in section 07 52 00, paragraph 2.12.D.	Confirmed wood blocking in stated details are considered wood nailing strips. Refer to clarification of 2.12.D in Section 07 52 00 in Addendum No. 5.
5-Q107	Section 00 52 00 (Agreement), paragraph 4.03 & 4.04 – Confirm the Liquidated Damages as defined would include a mutual waiver of Consequential Damages.	The liquidated damages do not include a mutual waiver of Consequential Damages.
5-Q108	Drawing C-218 – The wetland outlet structure detail calls for an aluminum trash rack. Please clarify if these trash racks should be furnished and install as part of the Misc. Metal Filed Sub Bid?	Aluminum trash rack shall be Misc and Ornamental Iron FSB. See specification 05 00 00 and 05 14 00.
5-Q109	Clarify the following regarding Section 05 53 00, Grating, Access Hatches and Access Doors; a. Drawing C-232 – Please confirm the access hatches on the Sanitary Pump Station pump chamber and valve chamber are to be furnished and installed as part of the Misc. Metal Filed	a. Access doors/access hatches located in precast site structures shall not be Misc and Ornamental Iron FSB. Sanitary Pump Station pump chamber and valve chamber access door/hatches are required to be H-20 rated.

	Sub Bid. Also confirm that both hatches are required to be H-20 rated. b. Drawing C-234 – Please confirm the access hatch on the 4000-Gal Pump chamber is to be furnished and installed as part of the Misc. Metal Filed Sub Bid. c. Drawing C-313 – Please confirm the access hatches for the Combination Air Release Valve Vaults are to be furnish and installed as part of the Misc. Metal Filed Sub Bid.	b. Access doors/access hatches located in precast site structures shall not be Misc and Ornamental Iron FSB. c. Access doors/access hatches located in precast site structures shall not be Misc and Ornamental Iron FSB.
5-Q110	Are there Pedestal's required for Gates 2 & 3 for mounting of the card reader and intercoms? Is there a detailed drawing showing gates 2 & 3.	Gate detail shown on drawing E-1802.
5-Q111	00 20 00-15 27.09: The Build America Buy America (BABA) requirements are waived for this Project based on EPA's Decision Memorandum titled Adjustment Period Waiver of Section 70914(a) of Public Law 117-58, Build America, Buy America Act for SRF Projects that have initiated Design Planning issued September 2, 2022. Does the project have Buy America requirements of any kind?	The contract is subject to the American Iron and Steel requirements. Refer to 00 52 00 Agreement Article 10.13 for AIS requirements.
5-Q112	Is each subcontractor responsible for a P&P bond?	Yes. Per Massachusetts General Laws Chapter 149, if the subcontractors have been prequalified in accordance with the prequalification procedures chapter, each prequalified subcontractor must furnish the general contractor with performance and payment bonds in the full amount of the subcontract price.
5-Q113	26 05 00-8 1.10 TEMPORARY LIGHTING AND POWER A. The EC shall reference the General Conditions and Section 01 51 00 − Temporary Utilities. Given that this specification only references 01 51 00. Please clarify if the EC is responsible for furnishing and installing temporary power and lights. If so, which specific sections of 01 51 00 apply to the EC?	The electrical subcontractor is responsible for the temporary power and lights. Refer to Addendum 5 Item 5-15.
5-Q114	The match lines do not match. Example: match lines on E-2224 and E-225 do not match. Please advise.	Matchline is past column line "E". Match drawings using column line "E".

5-Q115	Please provide a specification for the (6) EV chargers located in the administration parking lot if they are to be furnished and installed by division 26. If division 26 is only responsible for the pathways shown and not the furnishment/installation of the EV chargers, please indicate the manor in which the conduits and wire should be terminated in the field.	Refer to specification 11 11 36.13 for EVSE and provide as part of the Electrical Filed Sub-Bid.
5-Q116	Drawing E-1101 depicts items EWH-01+02, GMU-01, and DSW-CWP-01+02. Descriptions of these items cannot be found on any schedule, electrical, plumbing, HVAC, or otherwise. This missing information is indicative of most pieces of equipment on the electrical drawings. Given that this bid follows the MGL 149 laws, please provide an electrical equipment schedule that indicates the meaning of each acronym used, an enumeration of the items presented, electrical requirements for each item, and responsibility of furnishment/installation; or provide references on the electrical drawings for each item indicated that refer the sub bidder to the appropriate information contained in drawings or specs not made part of the division 26 sub bid.	Refer to the schedules provided in the FP, H, M, and P drawings and accompanying specifications. Unless specifically notated to be provided by "Electrical Filed Sub-Bid", equipment is generally provided by General Contractor, connected by the Electrical Filed Sub-Bid. Refer to electrical single-line diagrams, panel schedules, conduit and cable schedules provided in the contract documents.
5-Q117	Please confirm our understanding that all work and materials described in non-electrical specifications or shown on non-electrical drawings, without also being described in the electrical specifications is for coordination purposes only and shall not be part of the electrical contractor's bid for this project.	Confirmed. For clarity, electrical filed-sub bid specifications include those indicated in Div. 11, 26, and 28.
5-Q121	Who is responsible for fueling/refueling the generators?	Fueling for testing/startup of the generators shall be provided by the Electrical Filed Sub-Bid.
5-Q122	What besides the Fire Alarm & Sprinkler systems or Security Systems must stay active during any shutdowns?	Refer to specification 01 14 00 for shutdown requirements.
5-Q123	Drawing E-2801 indicates via hash lines equipment and conduits which will no longer be required upon completion of the project. Are these items to be demolished? Who is responsible for their demolition? Is there any demolition work not indicated in the electrical specs	Hashing indicates demolition as indicated on the contract documents. The Electrical Filed Sub-Bidder is responsible for demolition indicated on the E-drawings and specifications. Demolition represented elsewhere in the documents is to be provided by the GC contract.

	or drawings for which the EC is responsible?	
5-Q124	Please clarify what the numbers ascribed to occupancy sensors indicate. It appears these numbers denote the circuit controlled by the sensor, though occupancy sensors on drawing number E-1121 are labeled with number 13, and there is no circuit 13 on the corresponding page. Additionally, some sensors are not given a numerical indicator.	Occupancy sensors shall control the light fixtures located in the room they are shown. The number indicates the circuit for light fixtures to be controlled. The circuit numbers for the occupancy sensors on drawing E-1121 corrected in Addendum No. 5.
5-Q125	Please confirm that 3D notation on switches indicates a three-way dimmer switch.	Yes, 3D notation near a switch indicates a 3-Way dimmer switch.
5-Q126	Please confirm the identity of the canopy contractor. Several light fixtures in the canopy on drawing number E-1222 are unlabeled, please confirm their type if the electrical contractor is responsible for providing or installing them.	Refer to the Architectural specifications for the canopy manufacturer. Canopy manufacturer shall furnish and install the circular down lights, the linear lights LC10 and LW10 are furnished and installed by the electrical contractor. Electrical contractor shall make all final electrical connections for the canopy. Refer to the revised drawing E-1222 for drawings changes. Refer to Item 5-150 spec section 26 50 00 for revision to fixture LW10 and added fixture LC10.
5-Q127	Please confirm the presence of a type LW2 fixture slightly to the left of gridline A7 on drawing number E-2224. It has a label, but no symbol.	Yes, there is a fixture type LW2 above the door, left of column 7. Fixture type and circuit interfered showing the light symbol.
5-Q128	Please confirm strip fixture type(s) and their quantity for stair room A (Rm. 3101), on drawing number E-3321. One is unlabeled.	Fixtures in stairwell are type "LW1". Corrected drawing E-3701 issued in Addendum No. 5
5-Q129	Please clarify the 3-way lighting control system on drawing E-1221 in lab 1221, as the specifications on 26 27 26-4 occupancy sensors section indicate 120v line voltage OC's and the LR3 lights in this space has 0-10v dimming capabilities- please clarify the lighting control in this space.	The two wall switches in room 1221 shall be 3-way dimmer switches. Laboratory 1221 lights will turn on with occupancy sensors. The 3-Way switches shall dim the room lighting when lights are turned on.
5-Q130	Please confirm presence of duplex receptacle resting near the match line to DWG E-2108 on drawing number E-2105. It appears in this drawing, but not on E-2108.	Presence of duplex receptacle confirmed.
5-Q131	Please confirm receptacle type near the crossing of gridlines M and 1 on drawing	This receptacle is of type GFCI & WPCR.

	number E-2303. It is labeled normal duplex receptacle in this drawing but labeled GFCI & WCPR on the match line of neighboring drawing number E-2302.	
5-Q132	Please confirm receptacle types near the match line to E-2302 on drawing number E-2305. They are labeled normal duplex receptacle in this drawing but labeled GFCI & WCPR on the other drawing number E-2302.	This receptacle is of type GFCI & WPCR.
5-Q133	Please confirm receptacle types lying near match lines to both E-2305 and E-2303 on drawing number E-2306. They are labeled normal duplex receptacle, though they are indicated as GFCI & WCPR on other drawings.	These receptacles are of type GFCI & WPCR.
5-Q134	Please confirm receptacle type near match line to drawing E-2305 on drawing number E-2308. It is labeled normal duplex receptacle in this drawing but labeled GFCI & WCPR on other drawing.	This receptacle is of type GFCI & WPCR.
5-Q135	Please confirm receptacle type near match line to drawing E-2306 on drawing number E-2309. It is labeled normal duplex receptacle in this drawing but labeled GFCI & WCPR on other drawing.	This receptacle is of type GFCI & WPCR.
5-Q136	Please confirm that the EC shall perform all chasing, channeling, drilling, and patching necessary to the proper execution of this Contract?	Confirmed.
5-Q137	Will a temporary generator be required for shutdowns?	Refer to specification 01 14 00 for shutdown requirements. Maintenance of power to critical equipment must be provided during shutdowns and cutovers, which may require temporary generators.
5-Q138	Is the EC responsible for all concrete housekeeping pads for any floor mounted electrical equipment inside the buildings?	Housekeeping pads are to be provided by the GC, EC (Electrical Filed Sub-Bid) to coordinate all installations.
5-Q139	Please clarify the Electrical Contractor's responsibility for instrumentation scope. Who is to provide instrumentation control panels and devices? Startup and commissioning? Installation of equipment and devices. Raceway, cabling, and terminations?	Control panels and devices (in general) are to be provided by the GC. The EC (Electrical Filed Sub-Bid) is to provide raceway, cabling, terminations, and support for startup and commissioning. Spec sections required to be provided by the EC contain filed sub-bid language to clarify division of scopes and responsibilities.

5-Q140	The conduit/cable schedule provided in specification 26 06 11 indicates that #12 AWG wire and ¾" PVC conduit are indicated for the 208 V site lighting on E-013. Please indicate if these wireways and wires should be adjusted for voltage drop, or if the wire sizes indicated should be carried.	Cable and conduit schedule updated to account for voltage drop for site lighting.
5-Q141	E-1806 – Shows feeder P-043 from UPS-ADM to LP-UPS-ADM. The Conduit and Cable schedule shows feeder as (3) #2 AWG, (1) #8 GND, 2" RGS. The Panel Schedule on E-1805 shows panel as 3-phase, 4-wire. Please verify feeder and panel type.	Panel is 3-phase, 4 -wire, cable and conduit schedule updated to show feeder as (4) #2 AWG, (1) #8 GND, 2" RGS.
5-Q142	E-1806 – Shows feeder P-047 from UPS-EMER-1-ADM to LP-UPS-EMER-1-ADM. The Conduit and Cable schedule shows feeder as (4) #3 AWG, (1) #8 GND, 1-1/2" RGS. The Panel Schedule on E-1805 shows panel as 1-phase, 3-wire. Please verify feeder and panel type.	Panel is 1-phase, 3-wire, cable and conduit schedule updated to show feeder as (3) #3 AWG, (1) #8 GND, 1-1/2" RGS.
5-Q143	Shows feeder P-052 from PP-1-ADM to TX-1-ADM, 30KVA transformer, as a (3) #3AWG & (1) #8 GND in 1" RGS feed from 100A breaker. The secondary feeders, P-053, to LP-1-ADM is (4) #3AWG & (1) #8 GND in 1" RGS. The transformer is in the same room as both panels. Panel LP-1-ADM is shown to have a 100A P main breaker. Please verify transformer primary feeder size.	Transformer is 30 KVA and cable and conduit schedule updated to show primary feeder from PP-1-ADM to TX-1-ADM as (3) #6 AWG, (1) #10 GND, 1" RGS.
5-Q144	Section 26 23 00-2.02 LOW VOLTAGE METAL ENCLOSED SWITCHGEAR paragraph U. Surge Protective Devices, states Surge protective devices (SPD) shall be provided either integral to the switchgear enclosure or as a separate unit external to the switchgear enclosure (when indicated on the Drawings). See Section 26 43 13 – Surge Protective Devices for SPD requirements. One-line drawings do not indicate SPD in new electrical distribution equipment. Please verify if integral SPD will be required for Switchgear or any other electrical distribution equipment.	Surge protection devices are required per 26 23 00 and 26 43 13.
5-Q145	For temporary power the EC will be required to provide the temporary lighting	Refer to specification 01 14 00 for shutdown requirements. Maintenance of

	and power for the building construction only. Please provide the requirements if the scope is more than building lighting and power.	power to critical equipment must be provided during shutdowns and cutovers, which may require temporary generators.
5-Q146	Please identify and clarify the attached list of devices that are shown on Print E-2105 But are not called out in the Cable and Conduit schedule. Devises shown on print E-2105 • P-33040 • MOV-60505 • AE/AIT-60506 • AE/AIT-46004 • AE/AIT-10311 • AE/AIT-10312 • AE/AIT-10321 • AE/AIT-10322 • AE/AIT-30012 • AE/AIT-42061 • AE/AIT-42071 • AE/AIT-10331 • AE/AIT-10332 • AE/AIT-10341 • AE/AIT-10342 • AE/AIT-30022 • AE/AIT-42062 • AE/AIT-42042 • AE/AIT-40104 • AE/AIT-40204 • FSL-10315 • FSL-30015 • FE/FIT-40105 • FE/FIT-40205 • LIT-56011 • LIT-56021 • LSH-56112 • DSW-P-56070 • DSW-P-56060	Conduit to P-33040 called out as P-343/P-344 in C&C schedule. Conduit to MOV-60505 called out as P-523/P-524. Conduit to AIT-60506 called out as P-1015. Conduit to AIT-46004 called out as P-1012. AE/AIT-10311 called out as P-965. AE/AIT-10312 called out as P-966. AE/AIT-10321 called out as P-969. AE/AIT-10322 called out as P-970. AE/AIT-30012 called out as P-973. AE/AIT-42061 called out as P-1024. AE/AIT-42071 does not exist. AE/AIT-10331 called out as P-967. AE/AIT-10332 called out as P-968. AE/AIT-10341 called out as P-969. AE/AIT-10342 called out as P-970. AE/AIT-30022 called out as P-974. AE/AIT-42062 called out as P-1025. AE/AIT-42042 called out as P-984. AE/AIT-40104 called out as P-979. AE/AIT-40204 called out as P-981. No cable and conduit required for FSL-10315. No cable and conduit required for FSL-30015. FE/FIT-40105 called out as P-980. FE/FIT-40205 called out as P-982. LIT-56011 does not receive power, called out as I-329/I-330. LIT-56021 does not receive power, called out as I-331/I-332. LSH-56112 called out as P-1095. DSW-P-56070 called out as P-349. DSW-P-56060 called out as P-309.
5-Q148	Apon comparing switchgear-02 single line (E-2802) with the elevation on E-2811, it appears that the breaker descriptions do not line up. Buss A on the single line is missing the existing EMCC and Existing V-Belt blower. Buss B on the single line has an extra spare breaker. Please verify if the single line shown on E-2802 is correct.	The drawings E-2802 & E-2811 have been updated in Addendum #4 & 5 to match breaker descriptions.

5-Q149	Drawing E-1221 shows two duplex receptacle symbols in laboratory 1221 but does not provide circuit designation, please advise.	Circuit designation for receptacles shown on drawing E-1201, this receptacle will be hidden from lighting plan.
5-Q150	On the site drawing. Please provide the conduit and conductor schedule for the duct bank the run between the Dewatering Building and the Waste wash water tanks	Cable and conduit for run between dewatering building and waste wash water tanks shown on duct bank detail DB-24.
5-Q151	Please confirm that the EC is not responsible for the grouting as shown on E-004 or any other similar situations.	Grouting beneath equipment shall be provided and installed by GC.
5-Q152	Please confirm that stainless steel expansion anchors can be used in leu of chemical anchors as shown on E-003	Anchors shown on drawing E-003 shall be designed by Electrical Subcontractor's Engineer. See specification 05 05 23 for anchor requirements. Wedge anchors are suitable for overhead applications that are shown on drawing E-003.
5-Q153	Section 08 63 00 2.02A.d.:RFI - Based on specified finish of Exterior and Interior face sheets and a Panel U-factor of 0.23 Visible Light Transmission is calculated to be 16% in lieu of 15%. Is this acceptable?	Refer to clarification in Section 08 63 00 in Item 5-83 in Addendum No. 5.
5-Q154	Section 08 63 00 2.02A.g.: RFI - Based on specified finish of Exterior and Interior face sheets and a Panel U-factor of 0.23 Solar Gain Coefficient is calculated to be 0.22 in lieu of 0.21 Is this acceptable?	Refer to clarification in Section 08 63 00 in Item 5-83 in Addendum No. 5.
5-Q155	Section 08 63 00 2.02A.h. :RFI – Specified U-factor of 0.32 is not a typically listed or promoted U-Factor. Please inform if this U-Factor Specified should be the more typically requested 0.23 Panel U-factor.	Refer to clarification in Section 08 63 00 in Item 5-83 in Addendum No. 5.
5-Q156	Addenda 4, Item 4-29 – Inserted paragraph L which states exterior walls and interior walls over 12'-0" shall comply with the requirements of Section 05 40 00 – Cold Formed Metal Framing. Please confirm all framing (exterior, interior below 12'-0" and interior over 12'-0") will be furnished and installed by the Lathing and Plastering Filed Sub Bid.	Confirmed all framing will be furnished and installed by the Lathing and Plastering FSB. Refer to Section 09 20 00 Basic Lathing and Plastering in Items 5-84 and 5-85 in Addendum No. 5.
5-Q157	Who is responsible for providing and installing waterstops on the project?	Concrete contractor is responsible for providing and installing waterstops in accordance with Section 03 15 00.
5-Q158	Since the waterproofer has no control over the installation of the concrete, the concrete contractor is typically	Confirmed. Please refer to Section 07 27 26 and Section 03 35 00 revisions in Items 5-27, 5-28, and 5-63 in Addendum No. 5.

	responsible for the substrate prep items including, patching voids, bug holes and honeycombs, grinding irregular surfaces, patching tie holes, etc. Please confirm.	
5-Q159	Since the air barrier installer has no control over the installation of the concrete and masonry, please verify that the substrate prep items including patching voids, bug holes and honeycombs, grinding irregular surfaces, patching tie holes, and smooth, flush mortar joints in CMU walls are the responsibility of the preceding trades.	Confirmed. Please refer to Section 07 27 26 revisions in Addendum No. 5.
5-Q160	Section 079000- 5-D includes Styrofoam sill sealer. This is typically provided and installed by a framing contractor during stud track installation. Please advise.	Section 07 90 00 removed as WDC FSB in Addendum No. 5. WDC trade shall reference Section 07 90 00 for work pertinent to that trade. Refer to Architectural Note 05 40 00.2 on A-002.
5-Q161	079000-5-H includes powder coated aluminum wall panels. This is not in the expertise of or provided by a waterproofing contractor. Please advise.	Section 07 90 00 removed as WDC FSB in Addendum No. 5. WDC trade shall reference Section 07 90 00 for work pertinent to that trade.
5-Q162	079500 is listed as part of the WDC trade bid. Interior finish aluminum expansion joint covers, reference 079500-2.02-2-B, are typically provided and installed by millwork carpenters and the waterproofing contractor typically provides and installs the preformed seismic Emseal type joints. Please verify that is the case with this project.	Section 07 95 00 removed as WDC FSB in Addendum No. 5. WDC trade shall reference Section 07 95 00 for work pertinent to that trade.
5-Q163	Please reference 5/A-005 does the wall avb start at the outside face of parapet wall below the roofing overlap?	Refer to Architectural Notes 07 52 00.5 and 07 52 00.6 on A-003 and Detail 5 on A-005 for clarification in Addendum No. 5.
5-Q164	Please reference 8/A-006, is the roof expansion joint by the roofing contractor and does the wall avb start at the counterflashing over the expansion joint cover flange?	Roof expansion joints are by roofing contractor per Section 07 52 00, 2.16. Wall AVB transition membranes shall be furnished and installed in accordance with performance requirements 1.06 in Section 07 27 26 and air barrier testing requirements of Section 01 90 00. Refer to clarifications in Addendum No. 5 Items 5-63 and 5-87.
5-Q165	Please reference 3/A-007, does the wall avb overlap occur above the roof membrane at the location of the through wall flashing?	AVB transition membranes shall be provided at flashing in accordance with performance requirements of Section 07 27 26. Refer to A-007 in Addendum No. 5 for clarification.
5-Q166	Will caulking be required at gyp reveals similar to detail 4/A008?	Caulking will not be required at reveal as indicated to detail 4/A008

5-Q167	A-002 Architectural note 071354.0 says to provide waterproofing at slabs and footings below EL. 460 at water treatment plant and below EL. 448 at dewatering building. Drawing A-1701 Section A shows vapor retarder below mat slab. Please clarify which is correct for this and similar locations.	Below Grade Vapor Barrier location as shown on A-1701 is above EL 460. Refer to Arch note 07 26 16.0 and A-1701 drawing clarification in Addendum No. 5.
5-Q168	Plan E-3810 shows wiring from Dewatering Building back to ACP in Process Area in Water Treatment Building but it does not state what type of wiring. Is the intent to run fiber between buildings?	Provide fiber per the security riser diagrams and specifications
5-Q169	Some of the scale gauges in the lower right corner of all plans do not match the scale of the plan. Please advise?	The scale under the sheet title is the correct scale to use.
5-Q170	Element TX-3-ADM as shown on drawing E-1302 has no designation on panel schedules. (PP-3-ADM)	TX-3-ADM is designated on panel schedule PP-3-ADM as ""TX-3-ADM - LP-3-ADM"
5-Q171	E-012-ADD #4 – ductbank from Service Disconnect 'DSW-svc-01' to Pad Mounted Transformer 'TX-SVC-01' has callout that refers to DB-3 & 4 Details (DWG E-014). The details for DB-3 & DB-4 on DWG E-014 do not seem to correspond to the changes made to DWG E-012 & specification section 260611 Cable and Conduit Schedule. Please clarify.	DB-3 and DB-4 callouts on drawing E-012 will be updated to reflect details shown in E-014 and conduit shown in cable and conduit schedule.
5-Q172	Addendum #4 RFI response 4-Q3 states in part, Medium-voltage service conductors, disconnect, and transformer, including all appurtenances, to be provided by the Contract. Refer to Items 4-35 and 4-36 and Drawings E-012 and E-2802. Addendum #4 260611 Cable and Conduit Schedule shows the 23KV cables from the existing Utility Pole to Utility metering, from Utility metering to DSW-SVC-01, and DSW-SVC-01 to TX-SVC-01 to be provided by utility. Please clarify.	Provided by utility remark for these conduits will be removed from the cable and conduit schedule.
5-Q173	Fiber needs to be run between FACP's in the Admin Building and Process Area. Please clarify what type of fiber and how many strands are required?	Provide fiber cable per specification 40 66 00.
5-Q174	Please indicate the sizes of VDFs which are not included on the one-line diagram, such as VFD-CWP-01 and 02. The	Panel schedule PP-1-ADM indicates feed to VFD is 14.6 KVA. It will be updated to

	horsepower of the CWP motor is not indicated on an electrical plan or specification. The panel schedule PP-1-ADM indicates that the feed to the VFD is 4.87 kilovolt-amps which would indicate a 7.5 hp motor; however, drawing H-025,which is not referred to in the electrical plans or specifications, indicates that the CWP motor is 15 hp. Please advise which information should be incorporated into the division 26 bid.	indicate 17.4 KVA based on the 15 hp CWP motor.
5-Q175	There are (2) disconnects shown for CWP-02 on drawing E-1101. Does CWP-02 require more than one disconnect? If not, which one will remain?	CWP-02 does not require 2 disconnects, the disconnect on the southern wall removed.
5-Q176	Please confirm all conduits above ACT ceilings and behind gypsum wallboard can be EMT as stipulated in the “rigid conduit for non-hazardous areas” matrix in spec section 25 05 33.	Confirmed
5-Q177	Cable and conduit schedule: Conduits P-299-A through P-302-C (10 conduits) are from SWGR-02 to Spare breaker. According to the schedule there are cables associated with these conduits. Please confirm that there should be no cables or conduits installed for these conduits in question. If we are to install cables and conduits, please clarify where they are going.	There will be no cables or conduits installed for the conduits in question, cable and conduit schedule has been updated to reflect that.
5-Q178	There are changes in the cable and conduit schedule issued in addendum 4. These changes are not identified. Please add a column with addendum number 4 next to the respective cable and conduit that was changed so we can capture all the changes.	Changes to the cable and conduit schedule reflect changes to the single-line diagrams, block diagrams, and floor plans.
5-Q179	Please confirm the LW7 fixtures will be controlled via line voltage single pole switches as shown on drawing E-2322 and will not need remote drivers or digital lighting control.	The specified Hydrel fixtures do not require remote drivers or digital lighting control. If an alternate fixture manufacturer is submitted, remote drivers or digital lighting control may be required.
5-Q180	Drawing E-012 shows a duct bank going from the Dewatering Building to the wastewater tanks. It references duct bank detail 24 on drawing E-017 which shows three conduits. Drawing E-3801 shows two 100amp circuits and one 20amp circuit going to the wastewater	DB-24 has been corrected to show all conduits going from dewatering building to wastewater tanks.

	tanks. Drawing E-3802 shows two 100Amp and one 20amp circuit going to the wastewater tanks. Please correct the duct bank detail to show all the conduits going from the dewatering building to the wastewater tanks.	
5-Q181	Please confirm CCP 60210 and CCP60220 are furnished by the centrifuge manufacturer.	Confirmed.
5-Q182	One line drawing E3802 shows a feed to a bridge crane 60220. The bridge crane is not shown on the floor plans. Please provide the location.	Bridge crane is located in the dewatering building and shown on drawing E-3301. Tag (CRANE-60230) will be added for clarification.
5-Q183	A paging spec was provided but there are no paging symbols, or one lines on the drawings. Will a paging system be required on the bid?	Paging system will not be required at this time.
5-Q184	Camera schedules just list generic cameras with no make or model #s for the devices. Please provide this information for these devices.	Refer to specification 28 23 00 for requirements.
5-Q185	Please provide locations and fixture types where collapsible poles are needed as called for in detail E-26-0604 on drawing E-005.	The fixture type in the specifications determines what type of fixture requires a collapsible pole and what type of mounting.
5-Q186	Please provide locations and fixture types where aluminum stanchions are needed as called for in detail E-26-0603 on drawing E-005	Stanchion mount for pole light fixtures are not applicable on this project and shall be omitted. Disregard detail E-26-0603.
5-Q187	Can a specification be provided for the BIM requirements.	See changes to 01 78 39 in Addendum Item 5-24.
5-Q188	Section 26 32 13 – mentions 'radiator mounted load bank' in subsection 1.05 18 Shop drawings and in subsection 2.09F Cooling System. Load bank is mentioned seven more times as part of testing. No other specifications are given for a load bank. Is a load bank a required feature of the generator package? Please Clarify.	Load bank is not required.
5-Q189	Will the local electrical and fire alarm fees be paid by the EC? Or should we use the allowance mentioned in PG 421 4. Item 014100.1: Page # 421.4 City of Westfield Building	Utility fees will be paid by the Owner.
5-Q190	E-2812 MMC-2 Overall dimension is called out at 30'. The individual sections do not add up to 30'. Please provide correct footage so we can quantify	Drawings E-2812 has been updated to show correct dimensions.

	stainless steel embedded channels and rubber matting.	
5-Q191	On drawings C133 and C-140. It shows several electrical pieces of equipment west of the Dewatering Building, North of the WTB. These do not show up on the electrical site print. Please clarify and issue a new electrical site print with these in the intended location	Updated on re-issued site plan, E-012.
5-Q192	Drawing P-2300 – Clarify note 1. Scuppers and downspouts by Roofing Pre-Filed Sub-Bidder.	See revised plumbing drawings in Addendum 5.
5-Q193	There is no ACP located on the drawing similar to drawings E-1802 & E-3810. Provide a location for the ACP, network switch and patch panel.	ACP shown on drawing E-1802 added to control room shown on drawing E-1301. ACP shown on drawing E-3810 added to control room shown on drawing E-3301.
5-Q194	Please provide a NFPA241 plan for temporary fire protection of the building during construction. Is division 28 responsible for a temporary fire alarm system during construction?	Contractor (not Electrical FSB Contractor) is responsible for temporary fire protection per specification 01 51 00.
5-Q195	Please confirm that “or equal” products are understood to be acceptable for all products specified unless specifically stated otherwise within the applicable specification section.	Products that meet the specifications but are not named will be evaluated for "or equal" consideration during the submittal process.
5-Q196	Please confirm that all electrical and communications utility fees for the project are to be included in the electrical contractor’s bid. If utility fees of any kind are to be included, please provide a defined allowance to be included or a direct contact with knowledge of the project that can inform us as to what fees will be required.	Utility fees will be paid by the Owner.
5-Q197	Will a fire watch be needed for any EC activities at any time during the project?	Fire protection is to be provided in accordance with specification 01 51 00.
5-Q198	Please clarify the symbol for disconnect switches. Some presumed disconnects are indicated with labels “DSW” in electrical drawings yet the symbol used doesn’t conform to the legend’s indication of disconnect switch.	All disconnect switches indicated with label "DSW-".
5-Q199	Is 3D BIM coordination required for this project?	See Item 5-24 for requirements for electronic files.
5-Q200	E-002-Note #5 Indicates that a separate equipment grounding conductor shall be provided for each circuit. Can you confirm that more than one ground must	Confirmed. Provide as shown.

	be carried in a conduit if it has more than one circuit?	
5-Q201	Please provide the specifications of UPS-ADM & UPS-EMER-1-ADM shown on E-1806.	Refer to specification 26 33 53.
5-Q202	Specification 26 29 23 tables call out VFDs for this equipment. When I searched the contract documents using the terminology from the table, no results were found. Please provide an itemized list of VFDs that division 26 is to provide, the table does not provide enough information.	The table in specification 26 29 23 does not reflect all VFD's, refer to single line diagrams and other contract drawings for all VFD's.
5-Q203	There may be fire alarm devices which are required that are not shown on the plans i.e., elevator recall system, elevator shaft devices, knox boxes, exterior beacons, etc. Please advise on the basis of design.	Refer to specification 28 46 20 for requirements. Knox boxes will be provided by the Contractor.
5-Q204	26 05 29 2.02B indicates that indoor dry process areas should have supports and threaded rods constructed of hot dipped galvanized steel. 2.02C indicates that fastening hardware of the same installation designation area should be constructed of type 304 stainless steel. Stainless steel hardware cannot be used with HD galvanized rods. Please advise.	For indoor dry process areas only, provide either HD galvanized steel hardware OR type 304 stainless steel.
5-Q205	Drawing E-004 indicates details E-26-0401-4003. Please delineate which contractor is responsible for furnishing and installing the aluminum C6 X 4.48 stands and base plates on which the electrical equipment is mounted. The detail indicates that grout is to be furnished in between the aluminum bases and the concrete floor. Aluminum reacts with grout and will deteriorate over time. Please advise.	The electrical contractor is responsible for furnishing and installing all components of the free standing equipment mounts. The contractor shall apply a dielectric paint to the bottom of the base plate in accordance with the painting specifications. Refer to Note 1 of the free standing mount details.
5-Q206	Please delineate which contractor is responsible for furnishing and installing the local control stations indicated on E-004 detail E-26-0401.	Local control stations represented in BOLD on the electrical drawings are to be provided by the Electrical FSB. Else, stations are provided by others and connected by the Electrical FSB.
5-Q207	Please confirm that all electrical conduit supports are to be spaced no more than 5' maximum per details on E-003.	Confirmed. Provide as shown.
5-Q208	Spec 40 66 00-2.02.A-B calls for SCADA cables to be CAT6A with red jacket. Are	Provide CAT6A as specified. Color selection for network cables will be

	cameras and network cables to be CAT6A as well? What color jacket for these systems?	coordinated with owner during construction.
5-Q209	Spec 40 66 00-2.03.1.C says fiber shall be 48 count single mode unless otherwise noted. The control and instrumentation cable and conduit schedules generically list single mode fiber with no strand counts. Are we to assume that everything is going to be 48 count fibers?	Refer to Item 5-161.

SPRINGFIELD WATER AND SEWER COMMISSION

Theo G. Theocles, Esq.
Director of Legal Affairs/Chief Procurement Officer

Date: April 23, 2024

ATTACHMENT A – SIGN IN SHEET 4/9/2024

Hazen *Sign-In Sheet*

April 9, 2024

Location: West Parish Filters – 1515 Granville Rd, Westfield, MA

Subject: WPWTP Pre-Bid Site Visit

Name	Company	E-mail
William Viveiros	Northern Construction Service	wviveiros@northernconstruction.com
Andrew Collins	Collins Electric	ACollins@CE1906.com
Brian O'Connor	Collins Electric	boconnor@collinselectricco.com
Craig Riddell	Collins Electric	criddell@collinselectricco.com
John Rooney	Gagliarducci	info@gagliarducci.com
Bill Dennehy	Siemens Industry	bill.dennehy@Siemens.com
Tim Breen	Coreslab (CONN)	tbreen@coreslab.com
Clayton Simons	ASWP	csimons@American-USA.com
John Santry	Security 101	john.santry@security101.com
Sean Hall	Kinsley	shall@kinsleypower.com
Joe Maalouf	Methuen Construction	jmaalouf@methuenconstruction.com
Dave Burnham	Universal Electric	dburnham@uecma.com
Liz Stich	CH Nickerson	estich@chnickerson.com
JASON SERGENTANIS	NORTHEAST CONTRACTORS	JSergentanis@northeastcontractors.com
JOHN RODEGHER	NORTHEAST CONTRACTORS	
Bernard Lannie	H. CARR & SONS	BernardL@HCarr.com

ATTACHMENT B – CONTRACT DRAWINGS

ARCHITECTURAL DRAWINGS (CONT.)

	Drawing No.	Title
x	A-1300	WATER TREATMENT BUILDING - OVERALL PLAN AT EL 485.00 - ADMINISTRATION AREA
x	A-1301	WATER TREATMENT BUILDING - PLAN AT EL 485.00 - ADMINISTRATION AREA 1
x	A-1302	WATER TREATMENT BUILDING - PLAN AT EL 485.00 - ADMINISTRATION AREA 2
x	A-1303	WATER TREATMENT BUILDING - ENLARGED CONTROL ROOM AND PANTRY PLAN AT EL 485.00 - ADMINISTRATION AREA
x	A-1304	WATER TREATMENT BUILDING - PANTRY, CONFERENCE AND TRAINING ROOM INTERIOR ELEVATIONS AT EL 485.00 - ADMINISTRATION AREA
x	A-1305	WATER TREATMENT BUILDING - ENLARGED RESTROOMS PLAN AND INTERIOR ELEVATIONS AT EL 485.00 - ADMINISTRATION AREA
x	A-1306	WATER TREATMENT BUILDING - OVERALL REFLECTED CEILING PLAN AT EL 485.00 - ADMINISTRATION AREA
x	A-1400	WATER TREATMENT BUILDING - OVERALL ROOF PLAN AT EL 499.00 - ADMINISTRATION AREA
x	A-1601	WATER TREATMENT BUILDING - EXTERIOR ELEVATIONS - ADMINISTRATION AREA
x	A-1701	WATER TREATMENT BUILDING - BUILDING SECTIONS - ADMINISTRATION AREAS SHEET 1
x	A-1702	WATER TREATMENT BUILDING - BUILDING SECTIONS - ADMINISTRATION AREAS SHEET 2
x	A-1703	WATER TREATMENT BUILDING - WALL SECTIONS - ADMINISTRATION AREAS SHEET 1
x	A-1704	WATER TREATMENT BUILDING - WALL SECTIONS - ADMINISTRATION AREAS SHEET 2
x	A-1705	WATER TREATMENT BUILDING - CANOPY - ENLARGED PLANS, SECTIONS AND DETAILS - ADMINISTRATION AREA
x	A-1706	WATER TREATMENT BUILDING - LOBBY STAIR PLANS AND SECTIONS - ADMINISTRATION AREA
x	A-1707	WATER TREATMENT BUILDING - STAIR A PLANS AND SECTION - ADMINISTRATION AREA
x	A-1708	WATER TREATMENT BUILDING - ELEVATOR PLANS AND SECTIONS - ADMINISTRATION AREA
x	A-1709	WATER TREATMENT BUILDING - CURTAIN WALL A PLANS, ELEVATION AND SECTION - ADMINISTRATION AREA
x	A-1710	WATER TREATMENT BUILDING - CURTAIN WALL B PLANS, ELEVATION AND SECTION - ADMINISTRATION AREA
x	A-1711	WATER TREATMENT BUILDING - CURTAIN WALL C PLANS, ELEVATION AND SECTION - ADMINISTRATION AREA
x	A-1712	WATER TREATMENT BUILDING - CURTAIN WALL D AND E PLANS, ELEVATIONS AND SECTIONS - ADMINISTRATION AREA
x	A-1713	WATER TREATMENT BUILDING - SECTION DETAILS - ADMINISTRATION AREA
x	A-1714	WATER TREATMENT BUILDING - CEILING DETAILS - ADMINISTRATION AREA
x	A-2100	WATER TREATMENT BUILDING - OVERALL PLAN AT EL 457.00 - PROCESS AREA
x	A-2106	WATER TREATMENT BUILDING - PLAN AT EL 457.00 - PROCESS AREA 6
x	A-2200	WATER TREATMENT BUILDING - OVERALL PLAN AT EL 471.00 - PROCESS AREA
x	A-2201	WATER TREATMENT BUILDING - PLAN AT EL 471.00 - PROCESS AREA 1
x	A-2202	WATER TREATMENT BUILDING - PLAN AT EL 471.00 - PROCESS AREA 2
x	A-2204	WATER TREATMENT BUILDING - PLAN AT EL 471.00 - PROCESS AREA 4
x	A-2205	WATER TREATMENT BUILDING - PLAN AT EL 471.00 - PROCESS AREA 5
x	A-2206	WATER TREATMENT BUILDING - PLAN AT EL 471.00 - PROCESS AREA 6
x	A-2207	WATER TREATMENT BUILDING - PLAN AT EL 471.00 - PROCESS AREA 7
x	A-2208	WATER TREATMENT BUILDING - PLAN AT EL 471.00 - PROCESS AREA 8
x	A-2209	WATER TREATMENT BUILDING - PLAN AT EL 471.00 - PROCESS AREA 9
x	A-2210	WATER TREATMENT BUILDING - ENLARGED PLAN AT EL 471.00 - PROCESS AREA
x	A-2300	WATER TREATMENT BUILDING - OVERALL PLAN AT EL 485.00 - PROCESS AREA
x	A-2301	WATER TREATMENT BUILDING - PLAN AT EL 485.00 - PROCESS AREA 1
x	A-2302	WATER TREATMENT BUILDING - PLAN AT EL 485.00 - PROCESS AREA 2
x	A-2303	WATER TREATMENT BUILDING - PLAN AT EL 485.00 - PROCESS AREA 3
x	A-2304	WATER TREATMENT BUILDING - PLAN AT EL 485.00 - PROCESS AREA 4
x	A-2305	WATER TREATMENT BUILDING - PLAN AT EL 485.00 - PROCESS AREA 5
x	A-2306	WATER TREATMENT BUILDING - PLAN AT EL 485.00 - PROCESS AREA 6
x	A-2307	WATER TREATMENT BUILDING - PLAN AT EL 485.00 - PROCESS AREA 7
x	A-2308	WATER TREATMENT BUILDING - PLAN AT EL 485.00 - PROCESS AREA 8
x	A-2309	WATER TREATMENT BUILDING - PLAN AT EL 485.00 - PROCESS AREA 9
x	A-2400	WATER TREATMENT BUILDING - OVERALL ROOF PLAN AT EL 499.00 - PROCESS AREA
x	A-2500	WATER TREATMENT BUILDING - ROOF PLAN AT EL 510.33 - PROCESS AREA
x	A-2601	WATER TREATMENT BUILDING - EXTERIOR ELEVATIONS - PROCESS AREA SHEET 1
x	A-2602	WATER TREATMENT BUILDING - EXTERIOR ELEVATIONS - PROCESS AREA SHEET 2
x	A-2603	WATER TREATMENT BUILDING - EXTERIOR ELEVATIONS - PROCESS AREA SHEET 3
x	A-2604	WATER TREATMENT BUILDING - EXTERIOR ELEVATIONS - PROCESS AREA SHEET 4
x	A-2605	WATER TREATMENT BUILDING - EXTERIOR ELEVATIONS - PROCESS AREA SHEET 5
x	A-2701	WATER TREATMENT BUILDING - BUILDING SECTIONS - PROCESS AREA SHEET 1
x	A-2702	WATER TREATMENT BUILDING - BUILDING SECTIONS - PROCESS AREA SHEET 2
x	A-2703	WATER TREATMENT BUILDING - BUILDING SECTIONS - PROCESS AREA SHEET 3
x	A-2704	WATER TREATMENT BUILDING - WALL SECTIONS - PROCESS AREA SHEET 1
x	A-2705	WATER TREATMENT BUILDING - WALL SECTIONS - PROCESS AREA SHEET 2
x	A-2706	WATER TREATMENT BUILDING - STAIR B PLAN AND SECTION - PROCESS AREA
x	A-2707	WATER TREATMENT BUILDING - STAIR C PLAN AND SECTION - PROCESS AREA
x	A-2708	WATER TREATMENT BUILDING - STAIR D PLAN AND SECTION - PROCESS AREA
x	A-3101	DEWATERING BUILDING - PLAN AT EL 450.00
x	A-3201	DEWATERING BUILDING - PLAN AT EL 464.50
x	A-3301	DEWATERING BUILDING - PLAN AT EL 484.50
x	A-3302	DEWATERING BUILDING - REFLECTED CEILING AND ENLARGED PLANS AT EL 484.50
x	A-3303	DEWATERING BUILDING - INTERIOR ELEVATIONS
x	A-3401	DEWATERING BUILDING - PLAN AT EL 499.83
x	A-3501	DEWATERING BUILDING - ROOF PLAN AT EL 508.50
x	A-3601	DEWATERING BUILDING - BUILDING ELEVATIONS - SHEET 1
x	A-3602	DEWATERING BUILDING - BUILDING ELEVATIONS - SHEET 2
x	A-3701	DEWATERING BUILDING - BUILDING SECTIONS
x	A-3702	DEWATERING BUILDING - WALL SECTIONS
x	A-3703	DEWATERING BUILDING - STAIR A PLANS AND SECTION
x	A-5201	MISCELLANEOUS STRUCTURES - SITE ENTRY SIGN - PLAN AND DETAILS

STRUCTURAL DRAWINGS

	Drawing No.	Title
x	S-001	GENERAL NOTES - SHEET 1
x	S-002	GENERAL NOTES - SHEET 2
	S-003	STANDARD DETAILS - SHEET 1
	S-004	STANDARD DETAILS - SHEET 2
	S-005	STANDARD DETAILS - SHEET 3

x DENOTES DRAWING THAT REQUIRES FILED SUB BID

STRUCTURAL DRAWINGS (CONT.)

	Drawing No.	Title
	S-006	STANDARD DETAILS - SHEET 4
x	S-007	STANDARD DETAILS - SHEET 5
x	S-008	STANDARD DETAILS - SHEET 6
	S-009	STANDARD DETAILS - SHEET 7
	S-010	STANDARD DETAILS - SHEET 8
x	S-011	STANDARD DETAILS - SHEET 9
x	S-012	STANDARD DETAILS - SHEET 10
x	S-013	STANDARD DETAILS - SHEET 11
x	S-1101	WATER TREATMENT BUILDING - PLAN AT EL 457.00 - ADMINISTRATION AREA 1
	S-1200	WATER TREATMENT BUILDING - OVERALL PLAN AT EL 471.00 - ADMINISTRATION AREAS
x	S-1201	WATER TREATMENT BUILDING - PLAN AT EL 471.00 - ADMINISTRATION AREA 1
x	S-1202	WATER TREATMENT BUILDING - PLAN AT EL 471.00 - ADMINISTRATION AREA 2
	S-1300	WATER TREATMENT BUILDING - OVERALL PLAN AT EL 485.00 - ADMINISTRATION AREAS
x	S-1301	WATER TREATMENT BUILDING - PLAN AT EL 485.00 - ADMINISTRATION AREA 1
x	S-1302	WATER TREATMENT BUILDING - PLAN AT EL 485.00 - ADMINISTRATION AREA 2
	S-1400	WATER TREATMENT BUILDING - OVERALL ROOF PLAN AT EL 499.00 - ADMINISTRATION AREAS
	S-1401	WATER TREATMENT BUILDING - ROOF PLAN AT EL 499.00 - ADMINISTRATION AREA 1
	S-1402	WATER TREATMENT BUILDING - ROOF PLAN AT EL 499.00 - ADMINISTRATION AREA 2
	S-1501	WATER TREATMENT BUILDING - ROOF LOADING DIAGRAMS - ADMINISTRATION AREAS
x	S-1701	WATER TREATMENT BUILDING - SECTIONS - ADMINISTRATION AREA SHEET 1
	S-1702	WATER TREATMENT BUILDING - SECTIONS - ADMINISTRATION AREA SHEET 2
x	S-1703	WATER TREATMENT BUILDING - SECTIONS - ADMINISTRATION AREA SHEET 3
x	S-1704	WATER TREATMENT BUILDING - SECTIONS AND DETAILS - ADMINISTRATION AREA
	S-1705	WATER TREATMENT BUILDING - BEAM SCHEDULE AND DETAILS - ADMINISTRATION AREA
	S-2100	WATER TREATMENT BUILDING - OVERALL PLAN AT EL 457.00 - PROCESS AREAS
x	S-2104	WATER TREATMENT BUILDING - PLAN AT EL 457.00 - PROCESS AREA 4
x	S-2105	WATER TREATMENT BUILDING - PLAN AT EL 457.00 - PROCESS AREA 5
x	S-2106	WATER TREATMENT BUILDING - PLAN AT EL 457.00 - PROCESS AREA 6
x	S-2108	WATER TREATMENT BUILDING - PLAN AT EL 457.00 - PROCESS AREA 8
	S-2109	WATER TREATMENT BUILDING - PLAN AT EL 457.00 - PROCESS AREA 9
	S-2200	WATER TREATMENT BUILDING - OVERALL PLAN AT EL 471.00 - PROCESS AREAS
	S-2201	WATER TREATMENT BUILDING - PLAN AT EL 471.00 - PROCESS AREA 1
	S-2202	WATER TREATMENT BUILDING - PLAN AT EL 471.00 - PROCESS AREA 2
	S-2203	WATER TREATMENT BUILDING - PLAN AT EL 471.00 - PROCESS AREA 3
x	S-2204	WATER TREATMENT BUILDING - PLAN AT EL 471.00 - PROCESS AREA 4
x	S-2205	WATER TREATMENT BUILDING - PLAN AT EL 471.00 - PROCESS AREA 5
x	S-2206	WATER TREATMENT BUILDING - PLAN AT EL 471.00 - PROCESS AREA 6
	S-2207	WATER TREATMENT BUILDING - PLAN AT EL 471.00 - PROCESS AREA 7
x	S-2208	WATER TREATMENT BUILDING - PLAN AT EL 471.00 - PROCESS AREA 8
x	S-2209	WATER TREATMENT BUILDING - PLAN AT EL 471.00 - PROCESS AREA 9
	S-2300	WATER TREATMENT BUILDING - OVERALL PLAN AT EL 485.00 - PROCESS AREAS
x	S-2301	WATER TREATMENT BUILDING - PLAN AT EL 485.00 - PROCESS AREA 1
x	S-2302	WATER TREATMENT BUILDING - PLAN AT EL 485.00 - PROCESS AREA 2
x	S-2303	WATER TREATMENT BUILDING - PLAN AT EL 485.00 - PROCESS AREA 3
x	S-2304	WATER TREATMENT BUILDING - PLAN AT EL 485.00 - PROCESS AREA 4
x	S-2305	WATER TREATMENT BUILDING - PLAN AT EL 485.00 - PROCESS AREA 5
x	S-2306	WATER TREATMENT BUILDING - PLAN AT EL 485.00 - PROCESS AREA 6
	S-2307	WATER TREATMENT BUILDING - PLAN AT EL 485.00 - PROCESS AREA 7
x	S-2308	WATER TREATMENT BUILDING - PLAN AT EL 485.00 - PROCESS AREA 8
x	S-2309	WATER TREATMENT BUILDING - PLAN AT EL 485.00 - PROCESS AREA 9
	S-2400	WATER TREATMENT BUILDING - OVERALL ROOF PLAN AT EL 499.00 - PROCESS AREAS
	S-2401	WATER TREATMENT BUILDING - ROOF PLAN AT EL 499.00 - PROCESS AREA 1
	S-2402	WATER TREATMENT BUILDING - ROOF PLAN AT EL 499.00 - PROCESS AREA 2
	S-2403	WATER TREATMENT BUILDING - ROOF PLAN AT EL 499.00 - PROCESS AREA 3
x	S-2404	WATER TREATMENT BUILDING - ROOF PLAN AT EL 499.00 - PROCESS AREA 4
x	S-2405	WATER TREATMENT BUILDING - ROOF PLAN AT EL 499.00 - PROCESS AREA 5
	S-2406	WATER TREATMENT BUILDING - ROOF PLAN AT EL 499.00 - PROCESS AREA 6
	S-2408	WATER TREATMENT BUILDING - ROOF PLAN AT EL 499.00 - PROCESS AREA 8
	S-2409	WATER TREATMENT BUILDING - ROOF PLAN AT EL 499.00 - PROCESS AREA 9
	S-2501	WATER TREATMENT BUILDING - ROOF PLAN AT EL 509.67 AND EL 513.00 - PROCESS AREAS
	S-2502	WATER TREATMENT BUILDING - ROOF LOADING DIAGRAMS - PROCESS AREAS
x	S-2701	WATER TREATMENT BUILDING - SECTIONS - PROCESS AREA SHEET 1
x	S-2702	WATER TREATMENT BUILDING - SECTIONS - PROCESS AREA SHEET 2
x	S-2703	WATER TREATMENT BUILDING - SECTIONS - PROCESS AREA SHEET 3
x	S-2704	WATER TREATMENT BUILDING - SECTIONS - PROCESS AREA SHEET 4
x	S-2705	WATER TREATMENT BUILDING - SECTIONS - PROCESS AREA SHEET 5
x	S-2706	WATER TREATMENT BUILDING - SECTIONS - PROCESS AREA SHEET 6
x	S-2707	WATER TREATMENT BUILDING - SECTIONS - PROCESS AREA SHEET 7
x	S-2708	WATER TREATMENT BUILDING - SECTIONS - PROCESS AREA SHEET 8
x	S-2709	WATER TREATMENT BUILDING - SECTIONS - PROCESS AREA SHEET 9
x	S-2710	WATER TREATMENT BUILDING - SECTIONS - PROCESS AREA SHEET 10
x	S-2711	WATER TREATMENT BUILDING - SECTIONS - PROCESS AREA SHEET 11
	S-2712	WATER TREATMENT BUILDING - SECTIONS - PROCESS AREA SHEET 12
	S-2713	WATER TREATMENT BUILDING - SECTIONS - PROCESS AREA SHEET 13
x	S-2714	WATER TREATMENT BUILDING - SECTIONS - PROCESS AREA SHEET 14
x	S-2715	WATER TREATMENT BUILDING - SECTIONS - PROCESS AREA SHEET 15
x	S-2716	WATER TREATMENT BUILDING - SECTIONS AND DETAILS- PROCESS AREA SHEET 1
x	S-2717	WATER TREATMENT BUILDING - SECTIONS AND DETAILS- PROCESS AREA SHEET 2
	S-2718	WATER TREATMENT BUILDING - SECTIONS AND DETAILS- PROCESS AREA SHEET 3
	S-2719	WATER TREATMENT BUILDING - SECTIONS AND DETAILS- PROCESS AREA SHEET 4
	S-2720	WATER TREATMENT BUILDING - BEAM SCHEDULE AND DETAILS - PROCESS AREA
	S-2721	WATER TREATMENT BUILDING - COLUMN SCHEDULE AND DETAILS - PROCESS AREA

STRUCTURAL DRAWINGS (CONT.)

	Drawing No.	Title
x	S-3101	DEWATERING BUILDING - PLAN AT EL 450.00
x	S-3201	DEWATERING BUILDING - PLAN AT EL 464.50
x	S-3301	DEWATERING BUILDING - PLAN AT EL 484.50
x	S-3401	DEWATERING BUILDING - ROOF PLAN AT EL 499.83
x	S-3402	DEWATERING BUILDING - ROOF PLAN AT EL 515.83
x	S-3701	DEWATERING BUILDING - SECTIONS - SHEET 1
x	S-3702	DEWATERING BUILDING - SECTIONS - SHEET 2
x	S-3703	DEWATERING BUILDING - SECTIONS - SHEET 3
	S-3704	DEWATERING BUILDING - ROOF LOADING DIAGRAMS AND DETAILS
x	S-3705	DEWATERING BUILDING - SECTIONS AND DETAILS - SHEET 1
	S-3706	DEWATERING BUILDING - SECTIONS AND DETAILS - SHEET 2
	S-3707	DEWATERING BUILDING - BEAM SCHEDULE AND DETAILS
	S-4101	WASTE WASHWATER TANK - PLAN AT EL 429.50
x	S-4201	WASTE WASHWATER TANK - PLAN AT EL 464.00
x	S-4701	WASTE WASHWATER TANK - SECTIONS - SHEET 1
x	S-4702	WASTE WASHWATER TANK - SECTIONS - SHEET 2
	S-5001	MISCELLANEOUS STRUCTURES - BRIDGE 4 MODIFICATIONS - PLAN AND SECTION
	S-5002	MISCELLANEOUS STRUCTURES - HEADWALL 1 & 2 - PLANS AND SECTIONS
x	S-5301	MISCELLANEOUS STRUCTURES - CHEMICAL INJECTION VAULT - PLANS AND SECTIONS

MECHANICAL DRAWINGS

	Drawing No.	Title
	M-001	STANDARD DETAILS - SHEET 1
	M-002	STANDARD DETAILS - SHEET 2
x	M-003	STANDARD DETAILS - SHEET 3
x	M-004	STANDARD DETAILS - SHEET 4
	M-005	STANDARD DETAILS - SHEET 5
	M-006	STANDARD DETAILS - SHEET 6
	M-007	STANDARD DETAILS - SHEET 7
	M-101	DETAILS - SHEET 1
x	M-102	DETAILS - SHEET 2
	M-103	DETAILS - SHEET 3
	M-104	DETAILS - SHEET 4
	M-105	DETAILS - SHEET 5
	M-1001	WATER TREATMENT BUILDING - BELOW SLAB PIPING PLAN - ADMINISTRATION AREA 1
	M-1101	WATER TREATMENT BUILDING -PLAN AT EL 457.00 - ADMINISTRATION AREA 1
	M-1201	WATER TREATMENT BUILDING -PLAN AT EL 471.00 - ADMINISTRATION AREA 1
	M-1301	WATER TREATMENT BUILDING -PLAN AT EL 485.00 - ADMINISTRATION AREA 1
	M-1701	WATER TREATMENT BUILDING - SECTION - ADMINISTRATION AREA SHEET 1
	M-1702	WATER TREATMENT BUILDING - SECTION - ADMINISTRATION AREA SHEET 2
	M-1703	WATER TREATMENT BUILDING - SECTION - ADMINISTRATION AREA SHEET 3
	M-2000	WATER TREATMENT BUILDING - OVERALL PLAN BELOW SLAB
	M-2001	WATER TREATMENT BUILDING - BELOW SLAB PIPING PLAN - PROCESS AREA 1
	M-2002	WATER TREATMENT BUILDING - BELOW SLAB PIPING PLAN - PROCESS AREA 2
	M-2003	WATER TREATMENT BUILDING - BELOW SLAB PIPING PLAN - PROCESS AREA 3
	M-2004	WATER TREATMENT BUILDING - BELOW SLAB PIPING PLAN - PROCESS AREA 4
	M-2005	WATER TREATMENT BUILDING - BELOW SLAB PIPING PLAN - PROCESS AREA 5
	M-2006	WATER TREATMENT BUILDING - BELOW SLAB PIPING PLAN - PROCESS AREA 6
	M-2008	WATER TREATMENT BUILDING - BELOW SLAB PIPING PLAN - PROCESS AREA 8
	M-2009	WATER TREATMENT BUILDING - BELOW SLAB PIPING PLAN - PROCESS AREA 9
	M-2100	WATER TREATMENT BUILDING - OVERALL PLAN AT EL 457.00
	M-2101	WATER TREATMENT BUILDING - PLAN AT EL 457.00 - PROCESS AREA 1
	M-2102	WATER TREATMENT BUILDING - PLAN AT EL 457.00 - PROCESS AREA 2
	M-2103	WATER TREATMENT BUILDING - PLAN AT EL 457.00 - PROCESS AREA 3
	M-2104	WATER TREATMENT BUILDING - PLAN AT EL 457.00 - PROCESS AREA 4
	M-2105	WATER TREATMENT BUILDING - PLAN AT EL 457.00 - PROCESS AREA 5
	M-2106	WATER TREATMENT BUILDING - PLAN AT EL 457.00 - PROCESS AREA 6
	M-2107	WATER TREATMENT BUILDING - PLAN AT EL 457.00 - PROCESS AREA 7
	M-2108	WATER TREATMENT BUILDING - PLAN AT EL 457.00 - PROCESS AREA 8
	M-2109	WATER TREATMENT BUILDING - PLAN AT EL 457.00 - PROCESS AREA 9
	M-2200	WATER TREATMENT BUILDING - OVERALL PLAN AT EL 471.00
	M-2201	WATER TREATMENT BUILDING - PLAN AT EL 47100 - PROCESS AREA 1
	M-2202	WATER TREATMENT BUILDING - PLAN AT EL 47100 - PROCESS AREA 2
	M-2203	WATER TREATMENT BUILDING - PLAN AT EL 47100 - PROCESS AREA 3
	M-2204	WATER TREATMENT BUILDING - PLAN AT EL 47100 - PROCESS AREA 4
	M-2205	WATER TREATMENT BUILDING - PLAN AT EL 47100 - PROCESS AREA 5
	M-2206	WATER TREATMENT BUILDING - PLAN AT EL 47100 - PROCESS AREA 6
	M-2207	WATER TREATMENT BUILDING - PLAN AT EL 47100 - PROCESS AREA 7
	M-2208	WATER TREATMENT BUILDING - PLAN AT EL 47100 - PROCESS AREA 8
	M-2209	WATER TREATMENT BUILDING - PLAN AT EL 47100 - PROCESS AREA 9
	M-2300	WATER TREATMENT BUILDING - OVERALL PLAN AT EL 485.00
	M-2301	WATER TREATMENT BUILDING - PLAN AT EL 485.00 - PROCESS AREA 1
	M-2302	WATER TREATMENT BUILDING - PLAN AT EL 485.00 - PROCESS AREA 2
	M-2303	WATER TREATMENT BUILDING - PLAN AT EL 485.00 - PROCESS AREA 3
	M-2304	WATER TREATMENT BUILDING - PLAN AT EL 485.00 - PROCESS AREA 4
	M-2305	WATER TREATMENT BUILDING - PLAN AT EL 485.00 - PROCESS AREA 5
	M-2306	WATER TREATMENT BUILDING - PLAN AT EL 485.00 - PROCESS AREA 6
	M-2307	WATER TREATMENT BUILDING - PLAN AT EL 485.00 - PROCESS AREA 7
	M-2308	WATER TREATMENT BUILDING - PLAN AT EL 485.00 - PROCESS AREA 8
	M-2309	WATER TREATMENT BUILDING - PLAN AT EL 485.00 - PROCESS AREA 9
	M-2404	WATER TREATMENT BUILDING - PLAN AT EL 499.00 - PROCESS AREA 4

REV	ISSUED FOR	DATE	BY
1	ADDENDUM NO. 5	APR 24	MWM
0	ISSUED FOR BIDS	FEB 24	MWM

PROJECT ENGINEER:	K. BARRETT
DESIGNED BY:	C. BROWN
DRAWN BY:	D. KVOPKA
CHECKED BY:	M. MORIN

IF THIS BAR DOES NOT MEASURE 1" THEN DRAWING IS NOT TO FULL SCALE 0 1/2" 1"

COMMONWEALTH OF MASSACHUSETTS MARC W. MORIN CIVIL No. 53793 REGISTERED PROFESSIONAL ENGINEER

04/23/2024

Hazen

HAZEN AND SAWYER
100 GREAT MEADOW ROAD, SUITE 702
WETHERSFIELD, CT 06109

SPRINGFIELD WATER AND SEWER COMMISSION

WEST PARISH WATER TREATMENT PLANT

GENERAL
INDEX OF DRAWINGS - SHEET 2

DATE:	FEBRUARY 2024
HAZEN NO.:	90398-004
CONTRACT NO.:	24-51
DRAWING NUMBER:	G-003

Autodesk Docs://90398-004_West Parish Filter WTF/90398-004-General.rvt
4/19/2024 12:58:32 PM

MATCHLINE - SEE DRAWING NO. C-103

EXISTING 24" VPC
EXISTING 2 ½" PVC WATER
EXISTING 48" STEEL FILTERED WATER EFFLUENT
EXISTING 8" CI PRESSURE RAW WATER
EXISTING 1 ¼" PVC WATER
EXISTING 10" TILE DRAIN
EXISTING 6" CI SANITARY PIPE
EXISTING 12" CI PRESSURE WATER
DEMOLISH EXISTING 12" SPLIT TILE DRAIN
TEST PIT TP-06, TYP (SEE NOTES, DWG C-100)
EXISTING SSF NO. 9
EXISTING SSF NO. 10
EXISTING SSF NO. 17
DEMOLISH EXISTING 10" TILE DRAIN
CAP AND ABANDON EXISTING 8" CI PRESSURE WATER
EXISTING GATE 3 ACCESS ROAD
EXISTING GATE 3
DEMOLISH EXISTING 8" CI PRESSURE WATER
EXISTING SANITARY MANHOLE INV: 447.1 INV: 450.5
EXISTING 6" CI SANITARY PIPE
DEMOLISH EXISTING 6" CI SANITARY PIPE
CAP EXISTING 6" CI SANITARY SEWER
ABANDONED EXISTING 6" CI SANITARY PIPE
EXISTING COLLECTOR CHANNEL
EXISTING 4' ACCESS MANHOLE, TYP
DEMOLISH EXISTING 8" DRAIN PIPE, TYP
CAP AND ABANDON EXISTING 8" CI PRESSURE WATER
EXISTING SURVEY MONUMENT TBM - 2
DEMOLISH EXISTING DUCT BANK, APPROX (SEE NOTE 2, THIS DWG)
EXISTING CHLORINE ALARM (SEE NOTE 1, THIS DWG)
HISTORICAL BORING, TYP (SEE GEOTECH REPORT)
EXISTING FENCE
EXISTING SURVEY MONUMENT TBM - 1
GUARD RAIL, TYP
WEST PARISH FILTERS ENTRANCE SIGN
GRANVILLE ROAD
MATCHLINE - SEE DRAWING NO. C-102

NOTES:

1. EXISTING CHLORINE ALARM SHALL BE MAINTAINED DURING CONSTRUCTION.
2. EXISTING ELECTRICAL AND COMMUNICATION DUCT BANK SHALL BE MAINTAINED THROUGHOUT CONSTRUCTION TO PROVIDE POWER AND SIGNAL TO SECURITY APPARATUS AND CHLORINE ALARM. CONTRACTOR SHALL RELOCATE ALARM AND SECURITY APPARATUS ONCE GATE 3 IS PERMANENTLY RELOCATED. SEE ELECTRICAL DWGS.

KEY MAP
NTS

SCALE: 1" = 20'

REV	ISSUED FOR	DATE	BY
2	ADDENDUM NO. 5	APR 24	MWM
1	ADDENDUM NO. 3	MAR 24	MWM
0	ISSUED FOR BIDS	FEB 24	MWM

PROJECT ENGINEER: K. BARRETT
DESIGNED BY: J. RIVAS
DRAWN BY: K. CAMPOS
CHECKED BY: D. SHEERAN

IF THIS BAR DOES NOT MEASURE 1" THEN DRAWING IS NOT TO FULL SCALE (0 1/2" 1")

COMMONWEALTH OF MASSACHUSETTS DANIEL J. SHEERAN CIVIL No. 58423 REGISTERED PROFESSIONAL ENGINEER
4/12/2024

Hazen
HAZEN AND SAWYER
100 GREAT MEADOW ROAD, SUITE 702
WETHERSFIELD, CT 06109

SPRINGFIELD WATER AND SEWER COMMISSION

WEST PARISH WATER TREATMENT PLANT

CIVIL
EXISTING CONDITIONS
WITH YARD PIPING DEMOLITION PLAN
SHEET 1

DATE: FEBRUARY 2024
HAZEN NO.: 90398-004
CONTRACT NO.: 24-51
DRAWING NUMBER: C-101

File: C:\USERS\KROBBINS\DC\ACCDOCS\HAZEN AND SAWYER\90398-004_WEST PARISH FILTER WTF\PROJECT FILES\CIVIL\C-101 Saved by KROBBINS Save date: 4/19/2024 4:11 PM
PLOT DATE: 4/19/2024 4:19 PM BY: KROBBINS

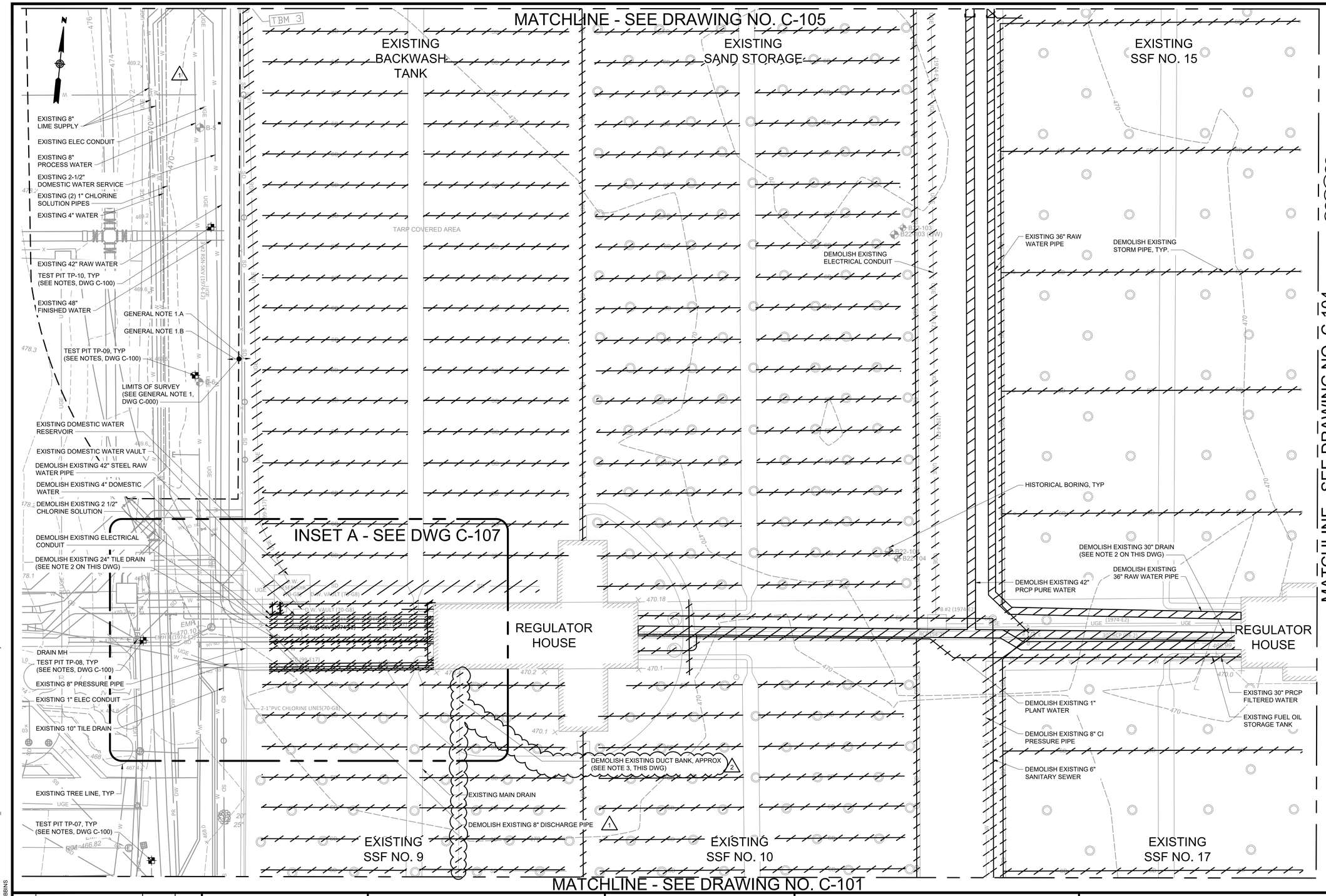

NOTES:

1. MANHOLE COVERS EXIST ON TOP OF BACKWASH TANK. THESE ARE NOT CURRENTLY SHOWN ON PLAN SINCE THE BACKWASH TANK WAS COVERED WITH A TARP DURING THE FIELD SURVEY.
2. SITE DRAIN SHALL BE RELOCATED, AS SHOWN ON C-120 SERIES AND C-130 SERIES DRAWINGS, PRIOR TO THE DEMOLITION OF THE EXISTING 24" AND 30" TILE DRAINS.
3. EXISTING ELECTRICAL AND COMMUNICATION DUCT BANK SHALL BE MAINTAINED THROUGHOUT CONSTRUCTION TO PROVIDE POWER AND SIGNAL TO SECURITY APPARATUS AND CHLORINE ALARM. CONTRACTOR SHALL RELOCATE ALARM AND SECURITY APPARATUS ONCE GATE 3 IS PERMANENTLY RELOCATED. SEE ELECTRICAL DWGS.

REV	ISSUED FOR	DATE	BY
2	ADDENDUM NO. 5	APR 24	MWM
1	ADDENDUM NO. 3	MAR 24	MWM
0	ISSUED FOR BIDS	FEB 24	MWM

PROJECT ENGINEER:	K. BARRETT
DESIGNED BY:	J. RIVAS
DRAWN BY:	K. CAMPOS
CHECKED BY:	D. SHEERAN

IF THIS BAR DOES NOT MEASURE 1" THEN DRAWING IS NOT TO FULL SCALE — 0 1/2" 1"

COMMONWEALTH OF MASSACHUSETTS — DANIEL J. SHEERAN — CIVIL — No. 58423 — REGISTERED PROFESSIONAL ENGINEER — 4/22/2024

Hazen

HAZEN AND SAWYER
100 GREAT MEADOW ROAD, SUITE 702
WETHERSFIELD, CT 06109

SPRINGFIELD WATER AND SEWER COMMISSION

WEST PARISH WATER TREATMENT PLANT

CIVIL
EXISTING CONDITIONS
WITH YARD PIPING DEMOLITION PLAN
SHEET 3

DATE:	FEBRUARY 2024
HAZEN NO.:	90398-004
CONTRACT NO.:	24-51
DRAWING NUMBER:	C-103

File: C:\USERS\KROBBINS\DC\ACCDOCS\HAZEN AND SAWYER\90398-004_WEST PARISH FILTER WTF\PROJECT FILES\CIVIL\C-103 Saved by KROBBINS Save date: 4/19/2024 4:24 PM
PLOT DATE: 4/19/2024 4:24 PM BY: KROBBINS

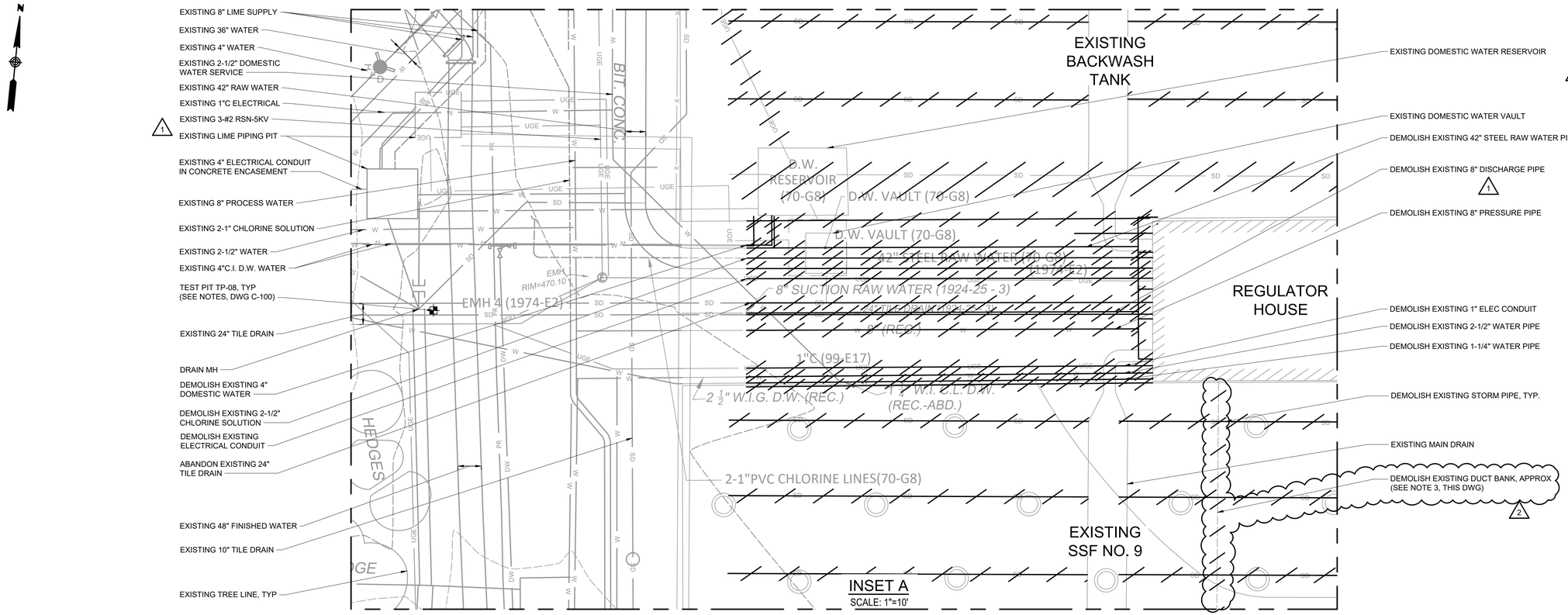

INSET A
SCALE: 1"=10'

NOTES:

1. MANHOLE COVERS EXIST ON TOP OF BACKWASH TANK. THESE ARE NOT CURRENTLY SHOWN ON PLAN SINCE THE BACKWASH TANK WAS COVERED WITH A TARP DURING THE FIELD SURVEY.
2. CONTRACTOR SHALL PROVIDE TEMPORARY POWER AND COMMUNICATION TO THE EXISTING FLOW METER CHAMBER PRIOR TO DEMOLITION OF DUCT BANK. SEE ELECTRICAL OVERALL SITE PLAN, DWG E-012.
3. EXISTING ELECTRICAL AND COMMUNICATION DUCT BANK SHALL BE MAINTAINED THROUGHOUT CONSTRUCTION TO PROVIDE POWER AND SIGNAL TO SECURITY APPARATUS AND CHLORINE ALARM. CONTRACTOR SHALL RELOCATE ALARM AND SECURITY APPARATUS ONCE GATE 3 IS PERMANENTLY RELOCATED. SEE ELECTRICAL DWGS.

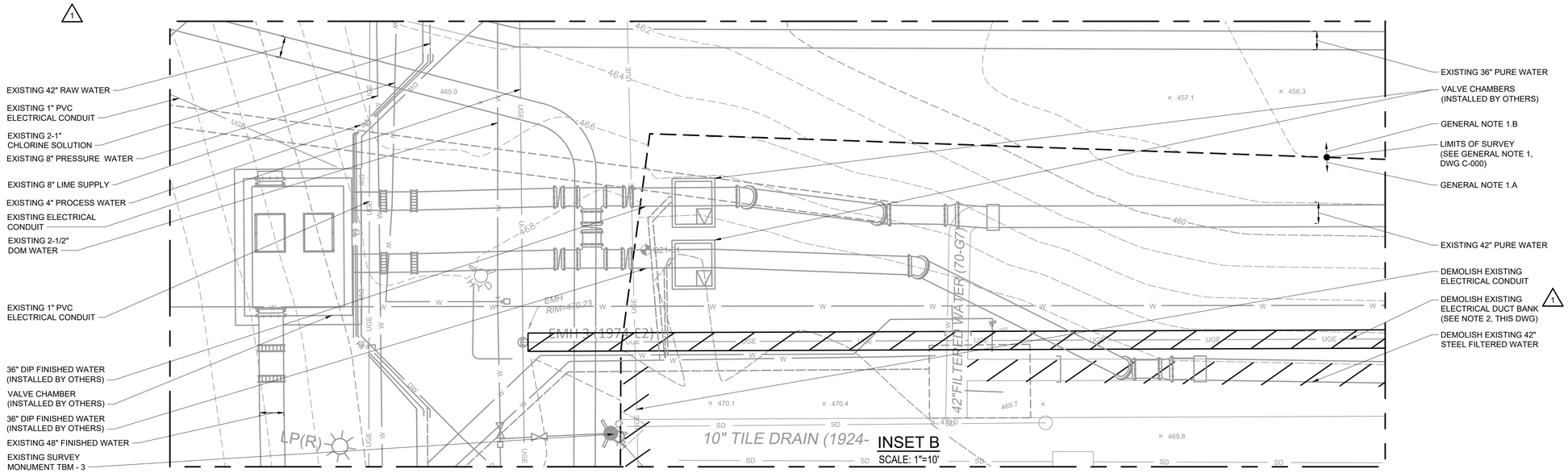

INSET B
SCALE: 1"=10'

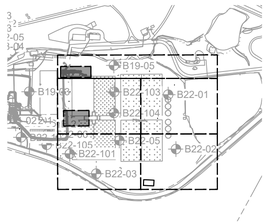

KEY MAP
NTS

SCALE: 1" = 10'

10 5 0 10'

REV	ISSUED FOR	DATE	BY
2	ADDENDUM NO. 5	APR 24	MWM
1	ADDENDUM NO. 3	MAR 24	MWM
0	ISSUED FOR BIDS	FEB 24	MWM

PROJECT ENGINEER:	K. BARRETT
DESIGNED BY:	J. RIVAS
DRAWN BY:	K. CAMPOS
CHECKED BY:	D. SHEERAN

IF THIS BAR DOES NOT MEASURE 1" THEN DRAWING IS NOT TO FULL SCALE 0 1/2" 1"

COMMONWEALTH OF MASSACHUSETTS
DANIEL J. SHEERAN
CIVIL
No. 58423
REGISTERED PROFESSIONAL ENGINEER
4/22/2024

Hazen

HAZEN AND SAWYER
100 GREAT MEADOW ROAD, SUITE 702
WETHERSFIELD, CT 06109

SPRINGFIELD WATER AND SEWER COMMISSION

WEST PARISH WATER TREATMENT PLANT

CIVIL
EXISTING CONDITIONS
WITH YARD PIPING DEMOLITION PLAN
SHEET 7

DATE:	FEBRUARY 2024
HAZEN NO.:	90398-004
CONTRACT NO.:	24-51
DRAWING NUMBER:	C-107

File: C:\USERS\KROBBINS\DC\ACCDOCS\HAZEN AND SAWYER\90398-004_WEST PARISH FILTER WTF\PROJECT FILES\CIVIL\C-107 Saved by KROBBINS Save date: 4/19/2024 4:29 PM
PLOT DATE: 4/19/2024 4:29 PM BY: KROBBINS

MATCHLINE - SEE DRAWING NO. C-113

EXISTING 8" CI PRESSURE RAW WATER

EXISTING 1 ½" PVC WATER

EXISTING 48" STEEL FILTERED WATER EFFLUENT

EXISTING 2 ½" PVC WATER

EXISTING 24" VPC

EXISTING 10" TILE DRAIN TO REMAIN

EXISTING 6" CI SANITARY PIPE

REMOVE EXISTING SIGN POST

EXISTING 12" CI PRESSURE WATER

REMOVE EXISTING LIGHT POLE , TYP

DEMOLISH EXISTING SSF NO. 9

DEMOLISH EXISTING SSF NO. 10

DEMOLISH EXISTING SSF NO. 17

DEMOLISH EXISTING GATE 3 ACCESS ROAD

DEMOLISH EXISTING GATE 3 (SEE NOTES 3 AND 4, THIS DWG)

DEMOLISH EXISTING FENCE (SEE NOTE 1, THIS DWG)

HISTORICAL BORING, TYP

DEMOLISH GRAVEL PATH

DEMOLISH CHAIN LINK FENCE (SEE NOTE 1, THIS DWG)

EXISTING SURVEY MONUMENT TBM - 2

GUARD RAIL, TYP

WEST PARISH FILTERS ENTRANCE SIGN TO BE DEMOLISHED

GRANVILLE ROAD

PLUG EXISTING SANITARY MH INV: 447.1 INV: 450.5

EXISTING 6" CI SANITARY PIPE

REMOVE EXISTING TREE , TYP

EXISTING SURVEY MONUMENT TBM - 1

EXISTING 6" C.I. SANITARY PIPE

EXISTING 4' SEWER MANHOLE, TYP

MATCHLINE - SEE DRAWING NO. C-112

NOTES:

1. CONTRACTOR SHALL MAINTAIN PERIMETER SECURITY OF PLANT SITE THROUGHOUT CONSTRUCTION ACTIVITIES THROUGH THE USE OF TEMPORARY FENCING OR OTHER SECURITY MEASURES AS APPROVED BY OWNER.
2. REFER TO R-SERIES DRAWINGS FOR SAND FILTERS DEMOLITION.
3. EXISTING CHLORINE ALARM SHALL BE MAINTAINED DURING CONSTRUCTION.
4. EXISTING ELECTRICAL AND COMMUNICATION DUCT BANK SHALL BE MAINTAINED THROUGHOUT CONSTRUCTION TO PROVIDE POWER AND SIGNAL TO SECURITY APPARATUS AND CHLORINE ALARM. CONTRACTOR SHALL RELOCATED ALARM AND SECURITY APPARATUS ONCE GATE 3 IS PERMANENTLY RELOCATED. SEE ELECTRICAL DWGS.

KEY MAP
NTS

SCALE: 1" = 20'

REV	ISSUED FOR	DATE	BY
3	ADDENDUM NO. 5	APR 24	MWM
2	ADDENDUM NO. 4	APR 24	MWM
1	ADDENDUM NO. 3	MAR 24	MWM
0	ISSUED FOR BIDS	FEB 24	MWM

PROJECT ENGINEER:	K. BARRETT
DESIGNED BY:	J. RIVAS
DRAWN BY:	K.CAMPOS
CHECKED BY:	D. SHEERAN
IF THIS BAR DOES NOT MEASURE 1" THEN DRAWING IS NOT TO FULL SCALE	0 1/2" 1"

COMMONWEALTH OF MASSACHUSETTS
DANIEL J. SHEERAN
CIVIL
No. 58423
REGISTERED PROFESSIONAL ENGINEER
4/22/2024

Hazen

HAZEN AND SAWYER
100 GREAT MEADOW ROAD, SUITE 702
WETHERSFIELD, CT 06109

SPRINGFIELD WATER AND SEWER COMMISSION

WEST PARISH WATER TREATMENT PLANT

CIVIL
DEMOLITION PLAN
SHEET 1

DATE:	FEBRUARY 2024
HAZEN NO.:	90398-004
CONTRACT NO.:	24-51
DRAWING NUMBER:	C-111

File: C:\USERS\KROBBINS\DC\ACCDOCS\HAZEN AND SAWYER\90398-004_WEST PARISH FILTER WTF\PROJECT FILES\CIVIL\C-111 Saved by JRIVAS Save date: 4/8/2024 7:36 PM
PLOT DATE: 4/19/2024 1:23 PM BY: KROBBINS

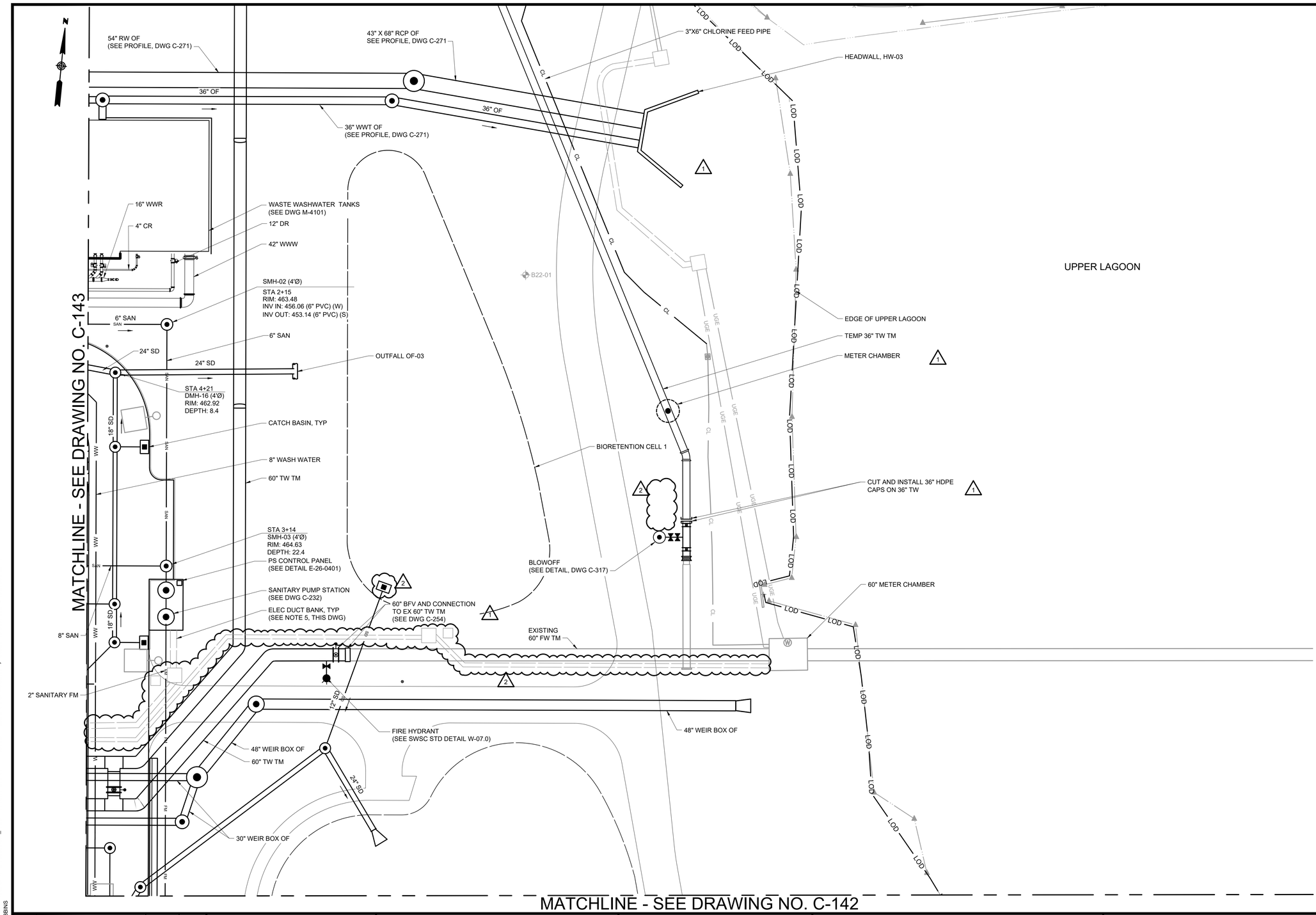

NOTES:

1. SEE DRAWINGS C-131 THROUGH C-136 FOR ADDITIONAL INFORMATION ON STORM DRAINS AND MANHOLES.
2. SEE DRAWINGS C-251 THROUGH C-254 FOR ADDITIONAL INFORMATION ON THE TREATED WATER TRANSMISSION MAINS.
3. SEE DRAWINGS C-212 AND C-216 FOR STORM DRAIN PROFILES.
4. SEE DRAWINGS C-271 THROUGH C-274 FOR OVERFLOW AND PROCESS PIPING PROFILES.
5. ELECTRICAL DUCT BANKS, MANHOLES, HANDHOLES, LIGHTS, AND EQUIPMENT ARE SCREENED FOR CLARITY. SEE ELECTRICAL DRAWINGS E-012 AND E-103 AND NOTE 3 ON DRAWING C-140.

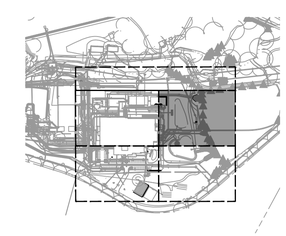

KEY MAP
NTS

SCALE: 1" = 20'

20 10 0 20'

REV	ISSUED FOR	DATE	BY
2	ADDENDUM NO. 5	APR 24	MWM
1	ADDENDUM NO. 3	MAR 24	MWM
0	ISSUED FOR BIDS	FEB 24	MWM

PROJECT ENGINEER:	K. BARRETT
DESIGNED BY:	L. WALLACE
DRAWN BY:	K. ROBBINS
CHECKED BY:	D. SHEERAN

IF THIS BAR DOES NOT MEASURE 1" THEN DRAWING IS NOT TO FULL SCALE 0 1/2" 1"

COMMONWEALTH OF MASSACHUSETTS
DANIEL J. SHEERAN
CIVIL
No. 58423
REGISTERED PROFESSIONAL ENGINEER
4/22/2024

Hazen

HAZEN AND SAWYER
100 GREAT MEADOW ROAD, SUITE 702
WETHERSFIELD, CT 06109

SPRINGFIELD WATER AND SEWER COMMISSION

WEST PARISH WATER TREATMENT PLANT

CIVIL
YARD PIPING PLAN
SHEET 4

DATE:	FEBRUARY 2024
HAZEN NO.:	90398-004
CONTRACT NO.:	24-51
DRAWING NUMBER:	C-144

File: C:\USERS\KROBBINS\DC\ACCDOCS\HAZEN AND SAWYER\90398-004_WEST PARISH FILTER WTF\PROJECT FILES\CIVIL\C-144 Saved by KROBBINS Save date: 4/19/2024 2:32 PM
PLOT DATE: 4/19/2024 3:19 PM BY: KROBBINS

STORM DRAIN STRUCTURE SCHEDULE

STRUCTURE ID	NORTHING	EASTING	DETAIL DWG	INNER DIMENSION (INCHES)
CB-01	2870622.43	294638.06	C-217	SEE DETAIL
CB-02	2870562.78	294722.19	C-217	SEE DETAIL
CB-03	2870644.40	294764.68	C-217	SEE DETAIL
CB-04	2870437.80	294534.79	C-217	SEE DETAIL
CB-05	2870492.56	294586.54	C-217	SEE DETAIL
CB-06	2870518.51	294737.87	C-217	SEE DETAIL
CB-07	2870548.46	294911.17	C-217	SEE DETAIL
CB-08	2870433.66	294974.56	C-217	SEE DETAIL
CB-09	2870513.22	294960.79	C-217	SEE DETAIL
CB-10	2870124.37	294614.19	C-217	SEE DETAIL
CB-11	2870156.57	294664.73	C-217	SEE DETAIL
CB-12	2870153.76	294783.93	C-217	SEE DETAIL
CB-13	2870176.54	294780.04	C-217	SEE DETAIL
CB-14	2870182.75	294951.34	C-217	SEE DETAIL
CB-15	2870192.67	295008.06	C-217	SEE DETAIL
CB-16	2870267.74	295003.23	C-217	SEE DETAIL
CB-17	2870323.17	294994.01	C-217	SEE DETAIL
DMH-01	2870634.79	294709.32	SWSC S-02.0	48" DIA
DMH-02	2870639.03	294733.78	SWSC S-02.0	48" DIA
DMH-03	2870648.69	294789.69	SWSC S-02.0	48" DIA
DMH-04	2870287.52	294560.69	SWSC S-02.0	48" DIA
DMH-05	2870340.07	294551.66	SWSC S-02.0	48" DIA
DMH-06	2870379.58	294544.83	SWSC S-02.0	48" DIA
DMH-07	2870475.26	294528.33	SWSC S-02.0	48" DIA
DMH-08	2870485.55	294587.65	SWSC S-02.0	48" DIA
DMH-09	2870492.89	294629.53	SWSC S-02.0	48" DIA
DMH-10	2870511.73	294739.03	SWSC S-02.0	48" DIA
DMH-11	2870519.71	294785.05	SWSC S-02.0	48" DIA
DMH-12	2870541.73	294912.33	SWSC S-02.0	48" DIA
DMH-13	2870431.69	294962.60	SWSC S-02.0	48" DIA
DMH-14	2870447.25	294959.90	SWSC S-02.0	48" DIA
DMH-15	2870511.16	294948.84	SWSC S-02.0	48" DIA
DMH-16	2870541.34	294943.61	SWSC S-02.0	48" DIA
DMH-17	2870137.98	294611.80	SWSC S-02.0	48" DIA
DMH-18	2870147.40	294666.24	SWSC S-02.0	48" DIA
DMH-19	2870167.33	294781.60	SWSC S-02.0	48" DIA
DMH-20	2870196.37	294948.99	SWSC S-02.0	48" DIA
DMH-21	2870206.20	295005.73	SWSC S-02.0	48" DIA
DMH-22	2870266.37	294995.30	SWSC S-02.0	48" DIA

NOTE: COORDINATES INDICATE CENTER OF STRUCTURE.

STORM DRAIN STRUCTURE SCHEDULE

STRUCTURE ID	NORTHING	EASTING	DETAIL DWG	INNER DIMENSION (INCHES)
DMH-23	2870298.22	294989.88	SWSC S-02.0	48" DIA
DMH-24	2870321.78	294985.81	SWSC S-02.0	48" DIA
DMH-25	2870403.77	295055.77	SWSC S-02.0	48" DIA
DMH-26	2870334.12	294990.64	SWSC S-02.0	48" DIA
DMH-100	2870505.71	293837.68	SWSC S-02.0	48" DIA
DMH-101	2870514.55	293834.72	SWSC S-02.0	48" DIA
DMH-102	2870543.74	293928.97	SWSC S-02.0	48" DIA
DMH-103	2870226.63	293902.45	SWSC S-02.0	72" DIA
DMH-104	2870212.45	294167.20	SWSC S-02.0	48" DIA
NMH-01	2870353.57	294543.18	SWSC S-02.0	72" DIA
NMH-02	2870126.11	294582.55	SWSC S-02.0	72" DIA
NMH-03	2870163.39	294799.10	SWSC S-02.0	72" DIA
NMH-04	2870197.32	294996.18	SWSC S-02.0	72" DIA
NMH-05	2870219.50	295120.86	SWSC S-02.0	72" DIA
NMH-06	2870257.54	295256.30	SWSC S-02.0	72" DIA
OS-01	2870473.38	295068.08	C-218	3'-4" X 2'-8"
OS-02	2870291.59	294952.84	C-218	3'-4" X 2'-8"
OS-03	2870337.52	295187.35	C-218	84" X 84"
OF MH-01	2870600.99	294578.25	C-217	96" DIA
OF MH-02	2870621.28	294696.03	C-217	96" DIA
OF MH-03	2870637.86	294791.91	C-217	96" DIA
OF MH-04	2870681.21	295044.04	C-217	96" DIA
OF MH-05	2870648.47	294903.12	SWSC S-02.0	60" DIA
OF MH-06	2870651.20	294918.89	SWSC S-02.0	60" DIA
OF MH-07	2870671.56	295036.57	SWSC S-02.0	60" DIA

SANITARY DRAIN STRUCTURE SCHEDULE

SMH-01	2870533.26	294780.05	SWSC S-02.0	48" DIA
SMH-02	2870564.60	294961.13	SWSC S-02.0	48" DIA
SMH-03	2870466.40	294978.13	SWSC S-02.0	48" DIA
SMH-04	2870262.76	294889.25	SWSC S-02.0	48" DIA
SMH-05	2870150.23	294924.15	SWSC S-02.0	48" DIA

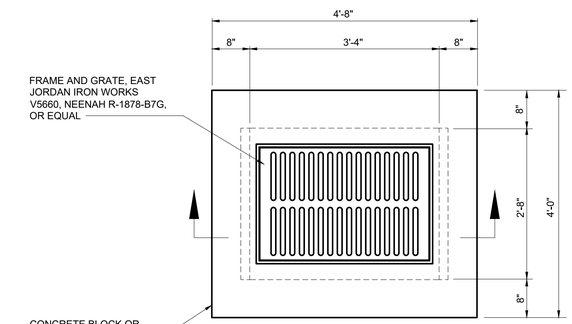

YARD INLET

C-22-0300

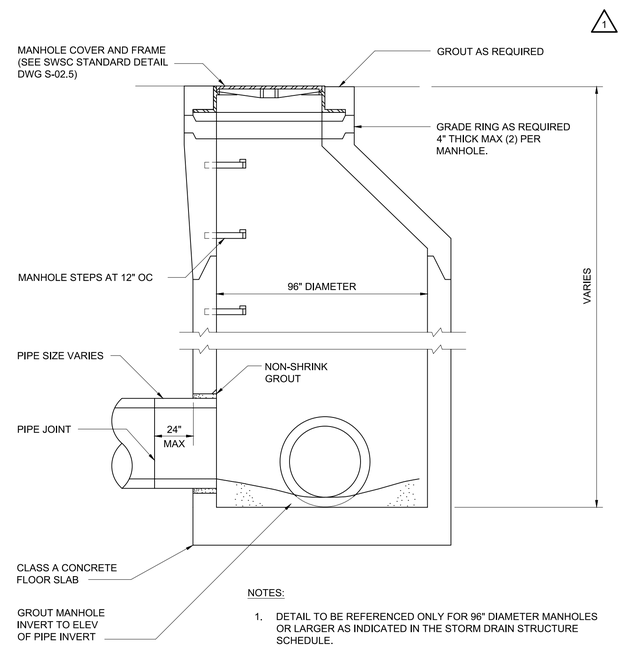

NOTES:

1. DETAIL TO BE REFERENCED ONLY FOR 96" DIAMETER MANHOLES OR LARGER AS INDICATED IN THE STORM DRAIN STRUCTURE SCHEDULE.
2. REFER TO HYDRAULIC CEMENT SEAL DETAIL ON SWSC STANDARD DETAIL DWG S-02.1 FOR ELLIPTICAL PIPE CONNECTIONS.

OVERFLOW MANHOLE

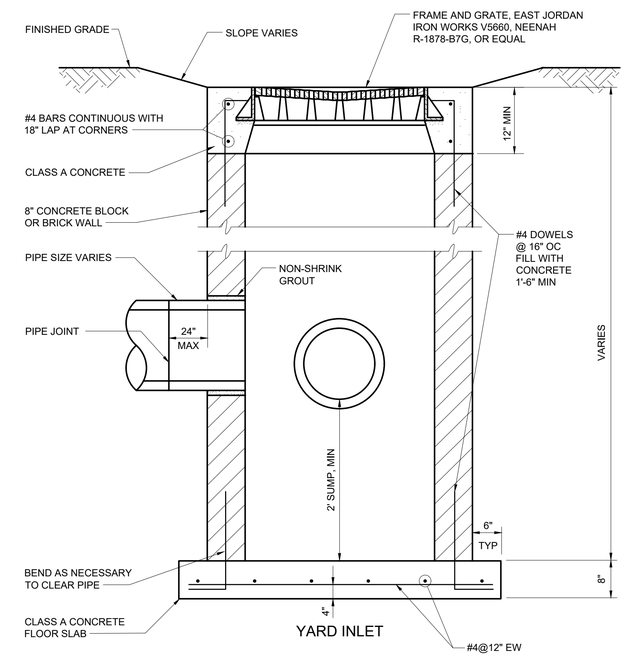

YARD INLET

C-22-0300

NOTE:
YARD INLET MAY BE PRECAST CONCRETE - SEE SPECIFICATIONS

YARD INLET

SCALE: NTS

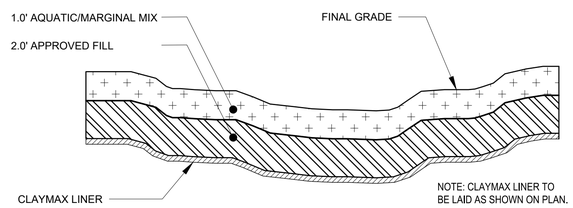

CLAYMAX LINER

NOT TO SCALE

REV	ISSUED FOR	DATE	BY
2	ADDENDUM NO. 5	APR 24	MWM
1	ADDENDUM NO. 4	APR 24	MWM
0	ISSUED FOR BIDS	FEB 24	MWM

PROJECT ENGINEER: K. BARRETT
DESIGNED BY: J. RIVAS
DRAWN BY: J. HARKINS
CHECKED BY: D. SHEERAN

IF THIS BAR DOES NOT MEASURE 1" THEN DRAWING IS NOT TO FULL SCALE 0 1/2" 1"

COMMONWEALTH OF MASSACHUSETTS
DANIEL J. SHEERAN
CIVIL
No. 58423
REGISTERED PROFESSIONAL ENGINEER
4/22/2024

Hazen

HAZEN AND SAWYER
100 GREAT MEADOW ROAD, SUITE 702
WETHERSFIELD, CT 06109

SPRINGFIELD WATER AND SEWER COMMISSION

WEST PARISH WATER TREATMENT PLANT

CIVIL
STORMWATER DETAILS - SHEET 1

DATE: FEBRUARY 2024
HAZEN NO.: 90398-004
CONTRACT NO.: 24-51
DRAWING NUMBER: C-217

File: C:\USERS\KROBBINS\DC\ACCDOCS\HAZEN AND SAWYER\90398-004_WEST PARISH FILTER WTF\PROJECT FILES\CIVIL\C-217 Saved by: JHARKINS Save date: 4/19/2024 2:30 PM
PLOT DATE: 4/19/2024 3:59 PM BY: KROBBINS

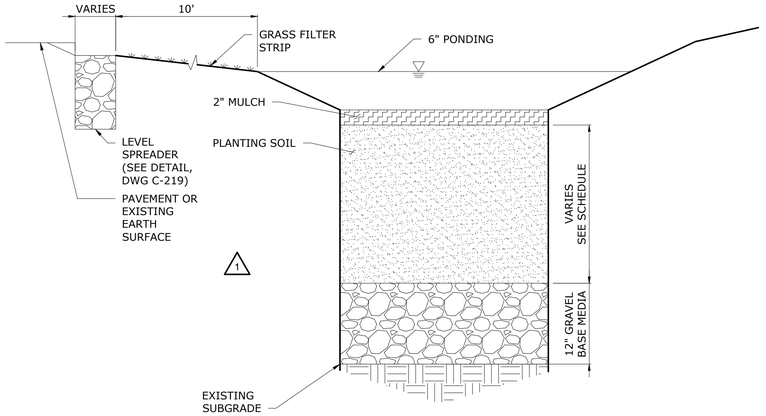

BIORETENTION SECTION

NTS

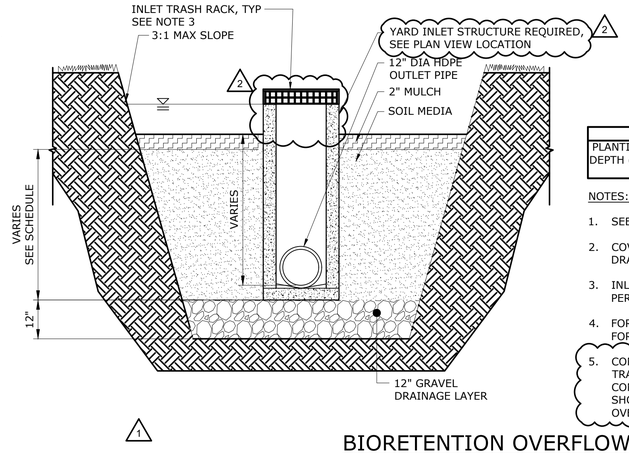

SCHEDULE OF DIMENSIONS

	BIO-1	BIO-2
PLANTING SOIL DEPTH (IN FEET)	3.5	2.0

NOTES:

1. SEE BIORETENTION LANDSCAPE DWGS FOR PLANTING PLANS.
2. COVER THE BOTTOM OF EXCAVATION WITH A 12" GRAVEL DRAINAGE LAYER.
3. INLET OPENING SHALL BE FURNISHED WITH TRASH RACKS PER SPECIFICATION SECTION 33 46 00.
4. FOR OUTLET PIPE INVERT BIO-1, SEE DWG C-134 AND C-216. FOR OUTLET PIPE INVERT BIO-2, SEE DWG C-131 AND C-216.
5. CONTRACTOR SHALL INSTALL PRECAST YARD INLET WITH TRASH RACK COVER FOR THE BIORETENTION OVERFLOW. CONTRACTOR SHALL NOT INSTALL THE FRAME AND COVER SHOWN ON THE YARD INLET DETAIL FOR THE BIORETENTION OVERFLOW STRUCTURE.

BIORETENTION OVERFLOW

NTS

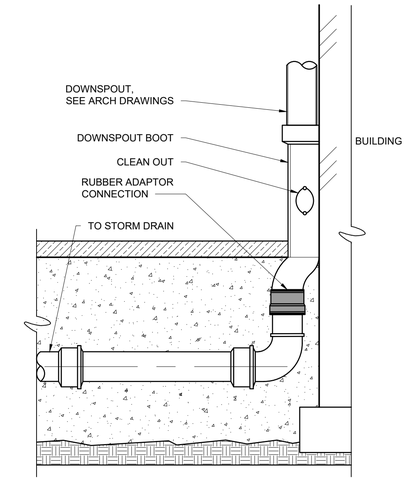

DOWNSPOUT CONNECTION TO STORM DRAIN

SCALE: NTS

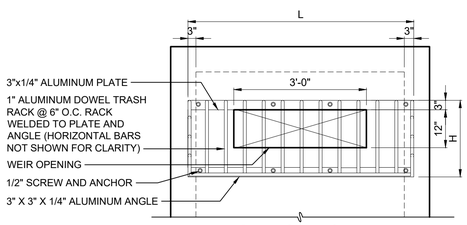

TRASH RACK FRONT VIEW

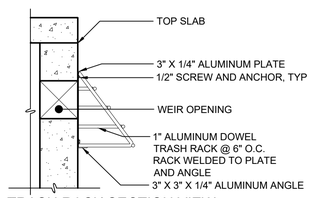

TRASH RACK SECTION VIEW

2

TRASH RACK DIMENSIONS		
WEIR OPENING	L (FT)	H (FT)
A	5.5	3.0
B	5.5	2.0

2 TRASH RACK NOTE:

TRASH RACK FOR WETLAND OUTLET STRUCTURE SHALL BE FILED SUB-BID AND SHALL BE WORK OF MISCELLANEOUS AND ORNAMENTAL IRON SUBCONTRACTOR. SEE SPECIFICATIONS SECTIONS 05 00 00 AND 05 14 00.

TRASH RACK

SCALE: 1" = 2'

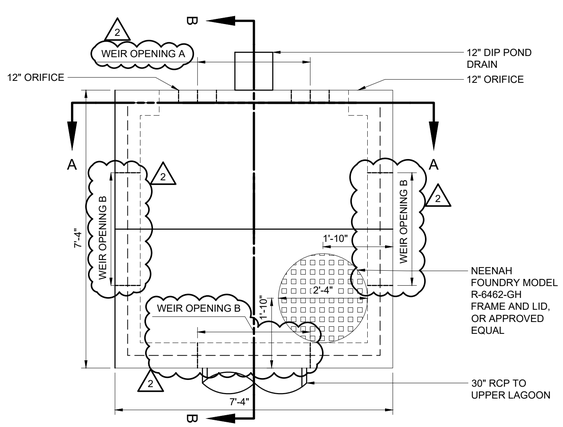

TOP PLAN

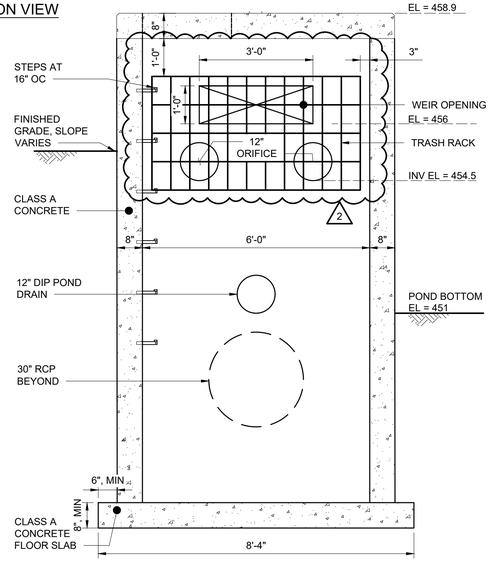

SECTION A - A

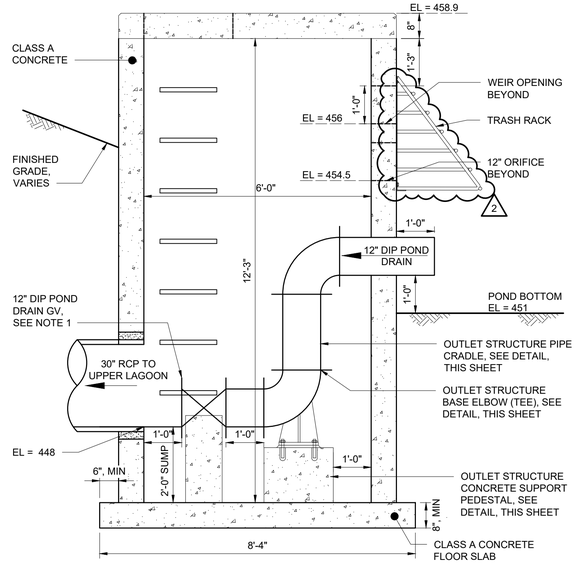

SECTION B-B

NOTES:
1. POND DRAIN 12" GV SHALL BE NORMALLY CLOSED.

WETLAND OUTLET STRUCTURE

SCALE: 1" = 2'

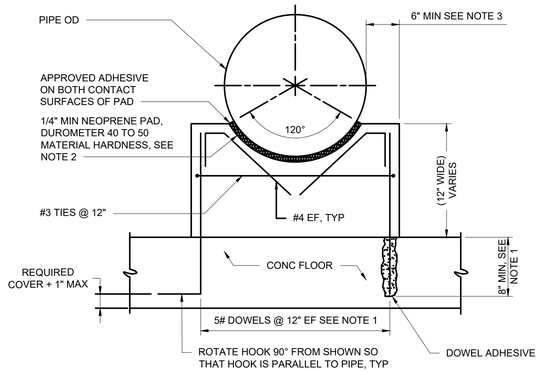

NOTES:
1. DOWELS MAY BE CAST IN WITH 90° HOOK OR ANCHORED WITH DOWEL ADHESIVE AT CONTRACTORS OPTION. WHERE FLOOR IS 8" THICK OR LESS, USE #4 DOWELS EMBEDDED TO WITHIN 2" OF BOTTOM OF FLOOR SLAB.
2. ENGINEER SHALL VERIFY THICKNESS OF PAD WILL ACCOMMODATE DESIGN MOVEMENT, PARTICULARLY FOR OUTSIDE AERIAL PIPE.
3. COORDINATE SUPPORT WIDTH WITH PIPE STRAP ANCHORAGE REQUIREMENTS. PROVIDE 6" MINIMUM, FROM CENTER OF PIPE STRAP ANCHOR ROD TO EDGE OF CONCRETE.

OUTLET STRUCTURE PIPE CRADLE SUPPORT

SCALE: NTS

REV	ISSUED FOR	DATE	BY
2	ADDENDUM NO. 5	APR 24	MWM
1	ADDENDUM NO. 4	APR 24	MWM
0	ISSUED FOR BIDS	FEB 24	MWM

PROJECT ENGINEER:	K. BARRETT
DESIGNED BY:	J. RIVAS
DRAWN BY:	J. HARKINS
CHECKED BY:	D. SHEERAN

IF THIS BAR DOES NOT MEASURE 1" THEN DRAWING IS NOT TO FULL SCALE — 0 1/2" 1"

COMMONWEALTH OF MASSACHUSETTS — DANIEL J. SHEERAN CIVIL No. 58423 — REGISTERED PROFESSIONAL ENGINEER — 4/22/2024

Hazen

HAZEN AND SAWYER
100 GREAT MEADOW ROAD, SUITE 702
WETHERSFIELD, CT 06109

SPRINGFIELD WATER AND SEWER COMMISSION

WEST PARISH WATER TREATMENT PLANT

CIVIL
STORMWATER DETAILS - SHEET 2

DATE:	FEBRUARY 2024
HAZEN NO.:	90398-004
CONTRACT NO.:	24-51
DRAWING NUMBER:	C-218

File: C:\USERS\JHARKINS\DC\ACCDOCS\HAZEN AND SAWYER\90398-004_WEST PARISH FILTER WTP\PROJECT FILES\CIVIL\C-218 Saved by JHARKINS Save date: 4/19/2024 5:14 PM
PLOT DATE: 4/22/2024 8:45 AM BY: JHARKINS

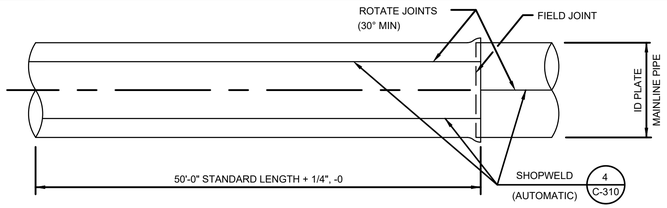

PIPE FABRICATION PLAN
3 PLATE CIRCUMFERENCE

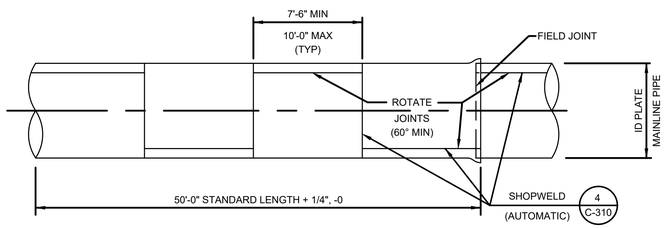

ALTERNATE:
1 PLATE CIRCUMFERENCE

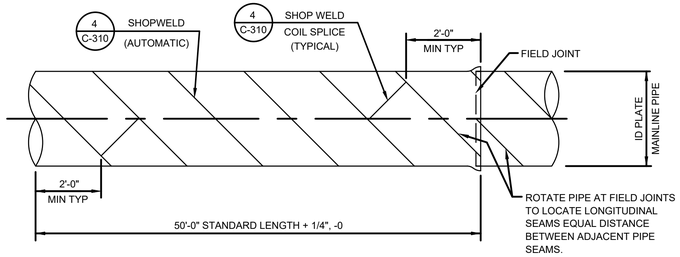

ALTERNATE:
SPIRAL PLATE CIRCUMFERENCE

PIPE FABRICATION DETAILS 1 C-310
NTS

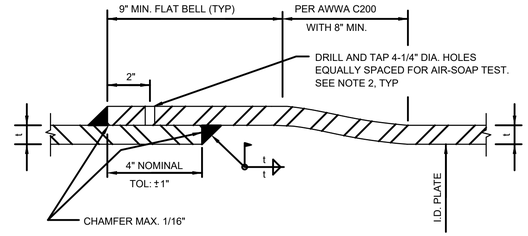

DOUBLE-WELDED LAP JOINT
MAX. PULL 3/4"

WELDED STEEL PIPE JOINT DETAILS 2 C-310
NTS

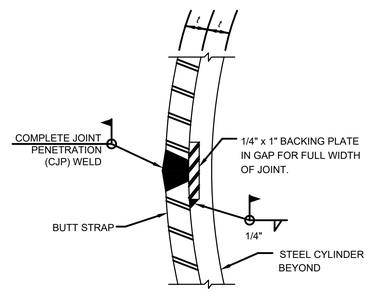

BUTT STRAP SPLICE 5 C-310
NTS

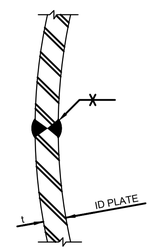

SHOP WELD 4 C-310
NTS

NOTES FOR DETAILS 1, 2, 4 AND 5:

1. "t" INDICATES THE THICKNESS OF THE STEEL PLATE AT THE STATION WHERE USED. "t" IS SPECIFIED IN SECTIONS 40 05 24.23 AND 40 06 20.
2. BEFORE WELDING, DRILL AND TAP TEST HOLES. CONTRACTOR TO AIR AND SOAP TEST AFTER WELDING IS COMPLETED. PLUG WELD HOLES AFTER SUCCESSFUL COMPLETION OF JOINT TESTS.
3. FOR DOUBLE-WELD AREAS, "Y" IS 5/16" FILLET WELD.
4. FOR FIELD WELDING OF INDIVIDUAL BUTT STRAP PIECES TO EACH OTHER, SEE BUTT STRAP SPLICE DETAIL 5.
5. STEEL PIPE SHALL BE SINGLE WELD WHERE 30" DIAMETER OR LESS, AND DOUBLE WELD WHERE GREATER THAN 30" DIAMETER.

1

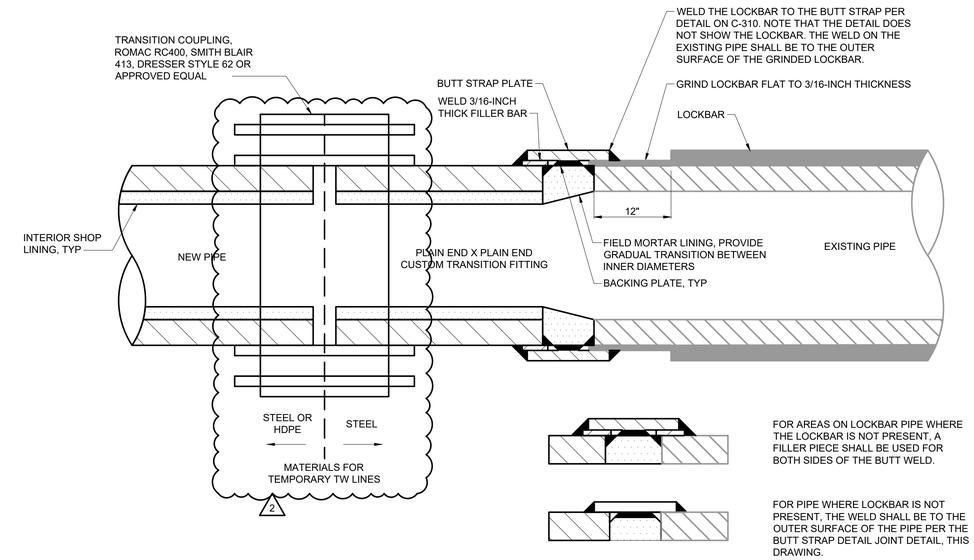

FOR AREAS ON LOCKBAR PIPE WHERE THE LOCKBAR IS NOT PRESENT, A FILLER PIECE SHALL BE USED FOR BOTH SIDES OF THE BUTT WELD.

FOR PIPE WHERE LOCKBAR IS NOT PRESENT, THE WELD SHALL BE TO THE OUTER SURFACE OF THE PIPE PER THE BUTT STRAP DETAIL JOINT DETAIL, THIS DRAWING.

1. CONTRACTOR SHALL PERFORM A TEST PIT TO DETERMINE THE DIAMETER AND OVALITY OF THE EXISTING PIPE. CONTRACTOR SHALL TAKE A COUPON SAMPLE OF THE EXISTING PIPE FOR METALLURGICAL TESTING.
2. THE TRANSITION FITTING SHALL MATCH THE OUTER DIAMETER AND OVALITY OF THE EXISTING PIPE WHERE IT IS CONNECTED TO THE EXISTING PIPE. WHERE LOCKBAR IS PRESENT, THE OUTER DIAMETER IS EQUAL TO THE OUTER EDGE OF THE GRINDED DOWN LOCKBAR. THE TRANSITION FITTING SHALL REDUCE OR EXPAND AS NECESSARY SO THAT THE OUTER DIAMETER ADJACENT TO THE NEW PIPE IS COMPATIBLE WITH A TRANSITION COUPLING.
3. THE LENGTH OF THE TRANSITION FITTING SHALL BE FIELD DETERMINED AFTER THE EXISTING PIPE IS EXAMINED AND TESTED. MINIMUM LENGTH OF 2'.
4. THE THICKNESS OF THE TRANSITION FITTING SHALL BE FIELD DETERMINED AND MUST BE AT MINIMUM AS SPECIFIED FOR THE NEAREST NOMINAL SIZE LISTED IN SECTION 40 05 24.23.
5. PIPE, LINING MATERIAL, AND THICKNESS SHALL BE PROVIDED IN ACCORDANCE WITH SECTION 40 05 24.23.

CONNECTION TO EXISTING STEEL PIPE 6 C-310
NTS

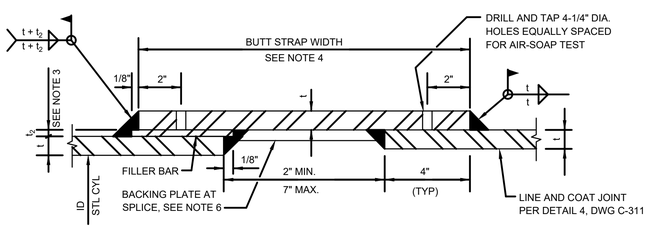

1 DOUBLE-WELD BUTT STRAP JOINT DETAILS 3 C-310
NTS

BUTT STRAP JOINT DETAIL NOTES:

1. LININGS AND COATINGS NOT SHOWN FOR CLARITY, SEE DETAIL 4 ON DRAWING C-311.
2. AFTER INSTALLATION OF HEAT SHRINK SLEEVE, HOLIDAY TEST AS SPECIFIED.
3. THICKNESS "t_2" INDICATES OFFSET OF ID BETWEEN STEEL CYLINDERS. PROVIDE FILLER BAR WHERE "t_2" IS 3/16" OR GREATER.
4. UNLESS OTHERWISE NOTED, CONFORM BUTT STRAP WIDTH TO THE LIMITATIONS SHOWN FOR PIPE END SEPARATION AND OVERLAP REQUIREMENTS. THIS INCLUDES THE ADDITIONAL 3-INCH INCREASE IF A TEMPERATURE CONTROL JOINT IS REQUIRED AT A BUTT STRAP JOINT.
5. BEFORE WELDING, DRILL AND TAP TEST HOLES. CONTRACTOR TO AIR AND SOAP TEST AFTER WELDING IS COMPLETED. PLUG WELD HOLES AFTER SUCCESSFUL COMPLETION OF JOINT TESTS.
6. FOR FIELD WELDING OF INDIVIDUAL BUTT STRAP PIECES TO EACH OTHER, SEE DETAIL 5 - BUTT STRAP SPLICE, THIS DRAWING.

REV	ISSUED FOR	DATE	BY
2	ADDENDUM NO. 5	APR 24	MWM
1	ADDENDUM NO. 4	APR 24	MWM
0	ISSUED FOR BIDS	FEB 24	MWM

PROJECT ENGINEER:	K. BARRETT
DESIGNED BY:	L. WALLACE
DRAWN BY:	K. ROBBINS
CHECKED BY:	D. SHEERAN
IF THIS BAR DOES NOT MEASURE 1" THEN DRAWING IS NOT TO FULL SCALE	0 1/2" 1"

COMMONWEALTH OF MASSACHUSETTS
DANIEL J. SHEERAN
CIVIL
No. 58423
REGISTERED PROFESSIONAL ENGINEER
4/22/2024

Hazen
HAZEN AND SAWYER
100 GREAT MEADOW ROAD, SUITE 702
WETHERSFIELD, CT 06109

SPRINGFIELD WATER AND SEWER COMMISSION

WEST PARISH WATER TREATMENT PLANT

CIVIL
STEEL PIPE DETAILS - SHEET 1

DATE:	FEBRUARY 2024
HAZEN NO.:	90398-004
CONTRACT NO.:	24-51
DRAWING NUMBER:	C-310

File: C:\USERS\KROBBINS\DC\ACCDOCS\HAZEN AND SAWYER\90398-004_WEST PARISH FILTER WTP\PROJECT FILES\CIVIL\C-310 Saved by KROBBINS Save date: 4/19/2024 10:12 AM
PLOT DATE: 4/19/2024 10:16 AM BY: KROBBINS

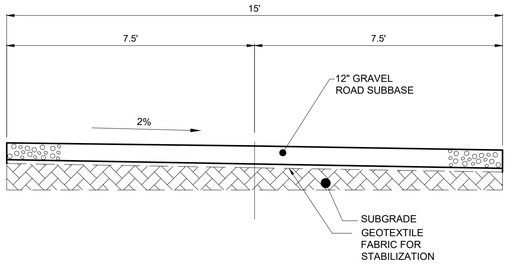

GRAVEL ROADWAY DETAIL

NOT TO SCALE

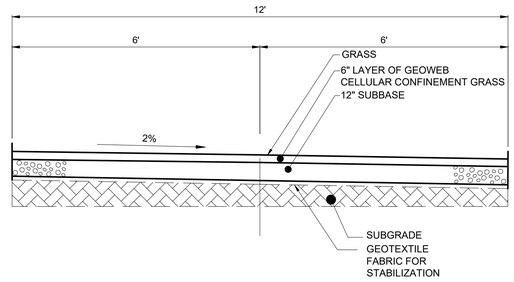

GRASS GEOCELL ROADWAY DETAIL

NOT TO SCALE

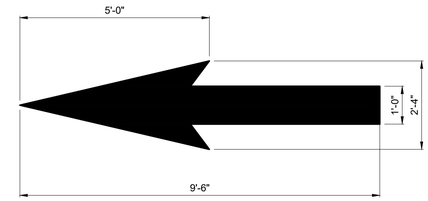

TRAFFIC ARROW DETAIL

NOT TO SCALE

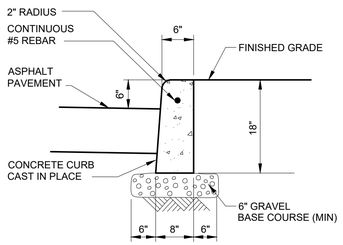

CONCRETE CURB DETAIL

NOT TO SCALE

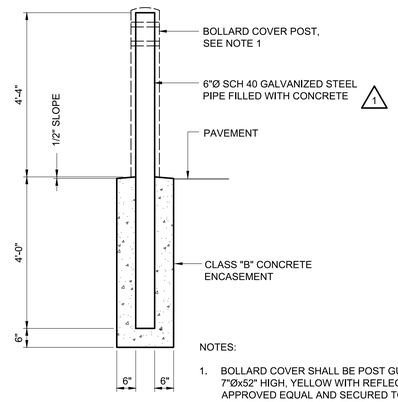

NOTES:

1. BOLLARD COVER SHALL BE POST GUARD MODEL CL1386F 7"Øx52" HIGH, YELLOW WITH REFLECTIVE RED STRIPES, OR APPROVED EQUAL AND SECURED TO STEEL PIPE WITH COMPRESSIVE FOAM STRIPS.

BOLLARD

C-32-0540

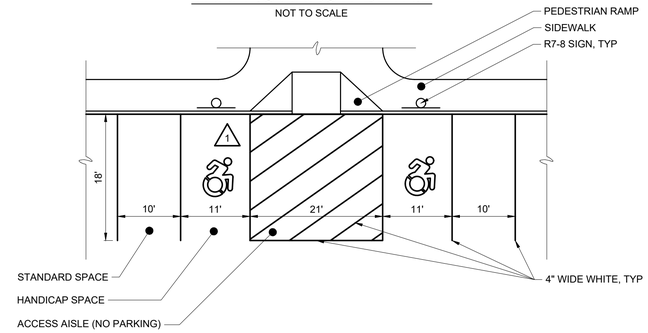

PARKING STALL STRIPING DETAIL

NOT TO SCALE

MUTCD SIGN SCHEDULE

SIGN OR PLAQUE	SIGN DESIGNATION	SIZE OF SIGN	TYPE OF MOUNT
	R3-1	24" X 24"	GROUND
	R3-2	24" X 24"	GROUND
	R5-1	30" X 30"	GROUND
	R7-8	12" X 18"	GROUND

1

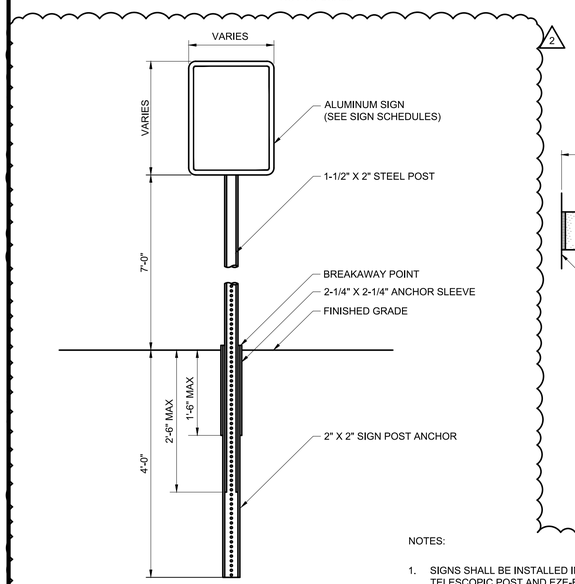

BREAKAWAY SIGN POST DETAIL

NOT TO SCALE

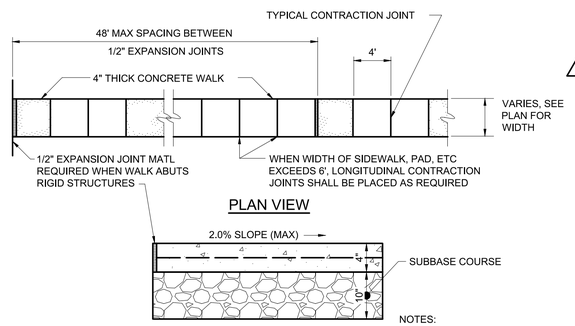

PLAN VIEW

ELEVATION

NOTES:

1. AT DRIVEWAYS, CONCRETE SLAB SHALL BE 6" THICK.

TYPICAL CONCRETE WALKWAY

C-32-0520

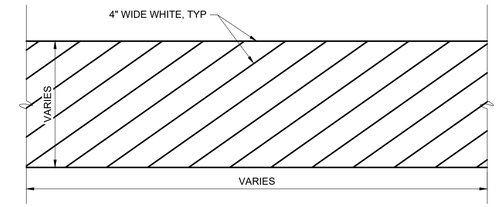

NO PARKING ZONE STRIPING DETAIL

NOT TO SCALE

INFORMATION SIGN SCHEDULE

SIGN OR PLAQUE	SIGN DESIGNATION	SIZE OF SIGN	TYPE OF MOUNT
	INF-01	36" X 36"	GROUND
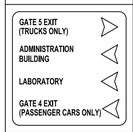	INF-02	36" X 36"	GROUND
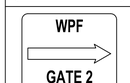	INF-03	30" X 30"	GROUND
	INF-04	30" X 30"	GROUND
	INF-05	12" X 18"	GROUND
	INF-06	12" X 18"	GROUND
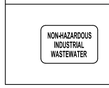	INF-07	18" X 12"	GROUND

1

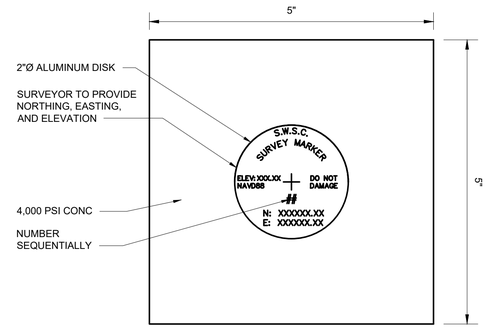

NOTES:

1. ALL WORK FOR INSTALLATION AND LABELING OF THE SURVEY MARKER SHALL BE PERFORMED BY A SURVEYOR LICENSED IN THE STATE OF MASSACHUSETTS.

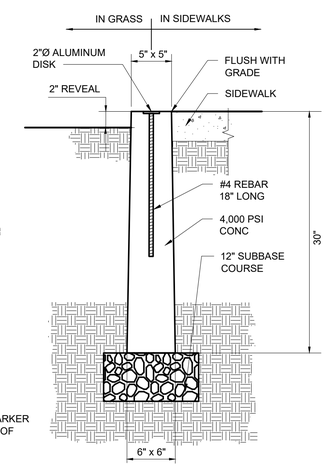

SURVEY MARKER

NOT TO SCALE

NOTES:

1. SIGNS SHALL BE INSTALLED IN COMPLIANCE WITH LOCAL, STATE AND FEDERAL REGULATIONS. REFER TO P-5 TELESCOPIC POST AND EZE-ERECT SIGN POST INSTALLATION DETAILS AS INDICATED IN THE COMMONWEALTH OF MASSACHUSETTS DEPARTMENT OF PUBLIC WORKS, STANDARD DRAWINGS FOR SIGNS AND SUPPORTS.
2. NEW SIGNS SHALL CONFORM TO THE 2009 MUTCD FOR SIZE, COLOR, TEXT DIMENSION, ETC.
3. ALL TRAFFIC SIGNS SHALL BE FURNISHED AS SPECIFIED PER THE FEDERAL HIGHWAY ADMINISTRATION'S THE LATEST EDITION OF THE MANUAL ON UNIFORM TRAFFIC CONTROL DEVICES (MUTCD) STANDARDS. SIGNS NOT SPECIFIED UNDER MUTCD SHALL BE PROVIDED AS DETAILED IN THE CONTRACT DOCUMENTS AND BE SUBMITTED TO THE ENGINEER FOR REVIEW.
4. IF ROCK IS ENCOUNTERED WHEN SETTING POSTS, DRILL HOLES 4 INCHES LARGER IN DIAMETER THAN POSTS AND BACKFILL TO GRADE WITH CLASS "B" CONCRETE.

REV	ISSUED FOR	DATE	BY
2	ADDENDUM NO. 5	APR 24	MWM
1	ADDENDUM NO. 3	MAR 24	MWM
0	ISSUED FOR BIDS	FEB 24	MWM

PROJECT ENGINEER:	K. BARRETT
DESIGNED BY:	J. RIVAS
DRAWN BY:	J. LU
CHECKED BY:	D. SHEERAN

IF THIS BAR DOES NOT MEASURE 1" THEN DRAWING IS NOT TO FULL SCALE (0 1/2" 1")

COMMONWEALTH OF MASSACHUSETTS
DANIEL J. SHEERAN
CIVIL
No. 58423
REGISTERED PROFESSIONAL ENGINEER
4/12/2024

Hazen

HAZEN AND SAWYER
100 GREAT MEADOW ROAD, SUITE 702
WETHERSFIELD, CT 06109

SPRINGFIELD WATER AND SEWER COMMISSION

WEST PARISH WATER TREATMENT PLANT

CIVIL
SITE DETAILS - SHEET 1

DATE:	FEBRUARY 2024
HAZEN NO.:	90398-004
CONTRACT NO.:	24-51
DRAWING NUMBER:	C-314

File: C:\USERS\KROBBINS\DC\ACCDOCS\HAZEN AND SAWYER\90398-004_WEST PARISH FILTER WTP\PROJECT FILES\CIVIL\C-314 Saved by KROBBINS Save date: 4/15/2024 11:06 AM
PLOT DATE: 4/18/2024 2:13 PM BY: KROBBINS

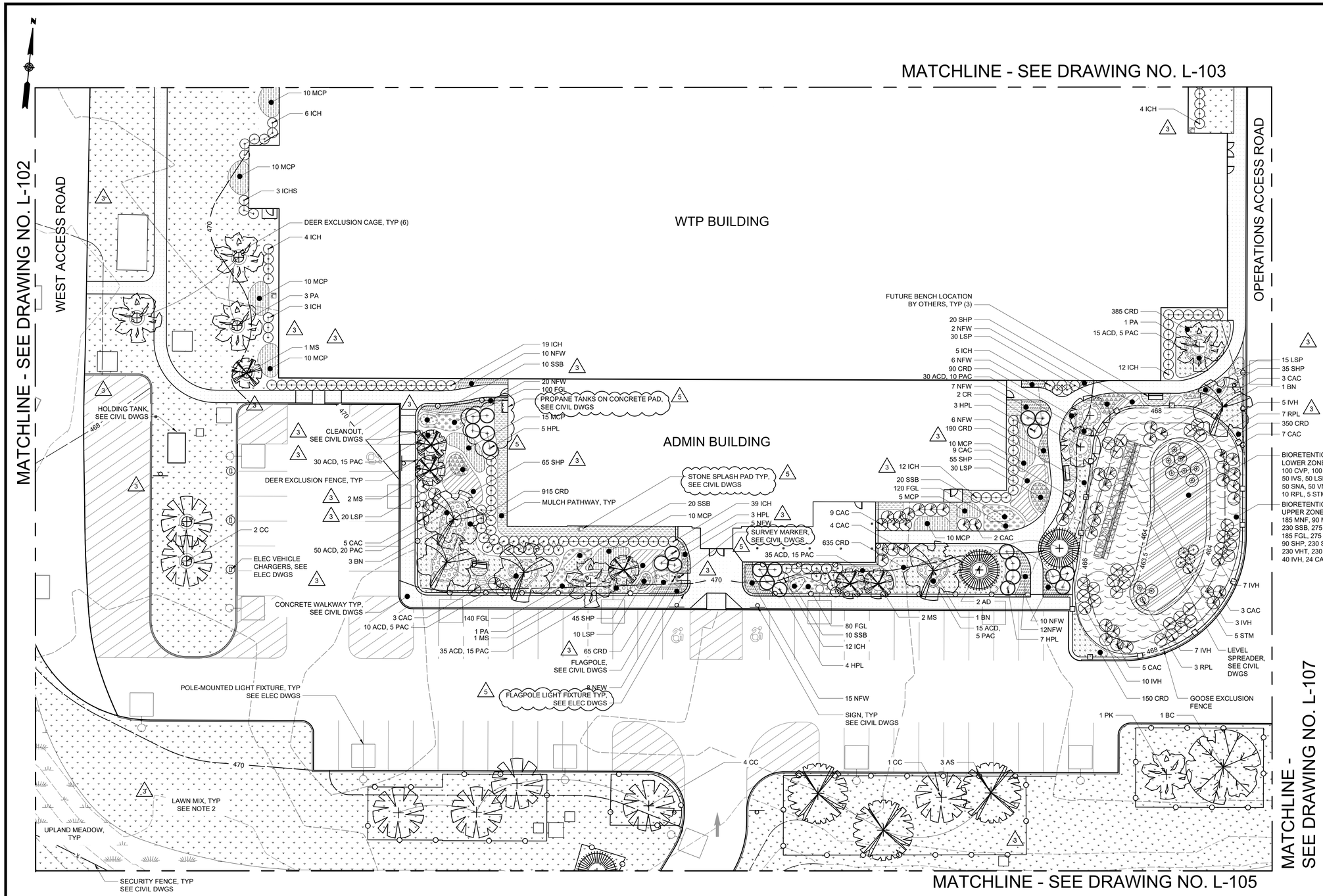

NOTES:

1. SEE SEEDING NOTES ON L-001.
2. SEE L-002 FOR FULL LAWN MIX EXTENTS.
3. SEE PLANTING AND SEEDING SCHEDULE ON L-201.
4. SEE PLANTING DETAILS ON L-202 AND L-203.

LEGEND:

DEER EXCLUSION FENCE
DEER EXCLUSION CAGE
GOOSE EXCLUSION FENCE
FUTURE BENCH, BY OTHERS

GROUNDCOVER

LAWN MIX
UPLAND MEADOW
MULCH

HARDSCAPE

CONCRETE WALKWAY, SEE CIVIL DWGS

ORNAMENTAL GRASSES AND PERENNIALS

FGL - *Festuca glauca* 'Elijah Blue'
MCP - *Muhlenbergia capillaris*
SSB - *Salvia* x sylvestris 'Blue Hill'
ACD - *Anemone canadensis.*
PAC - *Polystichum acrostichoides*
CRD - *Carex radiata*

BIORETENTION 2

LOWER ZONE
UPPER ZONE
LSP - *Liatris spicata*
NFW - *Nepeta fassenii* 'Walkers Low'
SHP - *Sporobolus heterolepis*

SHRUBS

CAC - *Clethra alnifolia* 'Caleb' Vanilla Spice
HPL - *Hydrangea paniculata* 'Limelight Prime'
ICH - *Ilex crenata* 'Hoogendorn'
IVH - *Itea virginica* 'Henry's Garnet'
RPL - *Rosa palustris*
STM - *Spirea tomentosa*

TREES

AS - *Acer saccharum* 'Commemoration'
AC - *Abies concolor* 'Candicans'
BN - *Betula nigra* 'BNMTF' *Dura-Heat*
CC - *Cercis canadensis alba* 'Royal white'
CR - *Carpinus caroliniana*
MS - *Magnolia stellata* 'Chrysanthemiflora'
PA - *Prunus sargentii* x sub. 'Accolade'

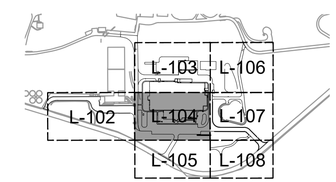

KEY MAP
NTS

SCALE: 1" = 20'
20 10 0 20'

REV	ISSUED FOR	DATE	BY
5	ADDENDUM NO. 5	APR 24	MWM
3	ADDENDUM NO. 3	MAR 24	MWM
0	ISSUED FOR BIDS	FEB 24	MWM

PROJECT ENGINEER: K. BARRETT
DESIGNED BY: K. CAMPOS
DRAWN BY: K.CAMPOS
CHECKED BY: E. MOSKALENKO

IF THIS BAR DOES NOT MEASURE 1" THEN DRAWING IS NOT TO FULL SCALE 0 1/2" 1"

MASSACHUSETTS ELIZABETH MOSKALENKO NO. 4454 REGISTERED LANDSCAPE ARCHITECT

Hazen

HAZEN AND SAWYER
100 GREAT MEADOW ROAD, SUITE 702
WETHERSFIELD, CT 06109

SPRINGFIELD WATER AND SEWER COMMISSION

WEST PARISH WATER TREATMENT PLANT

LANDSCAPE
PLANTING PLAN - SHEET 4

DATE: FEBRUARY 2024
HAZEN NO.: 90398-004
CONTRACT NO.: 24-51
DRAWING NUMBER: L-104

File: C:\USERS\KCAMPOS\DC\ACCDOCS\HAZEN AND SAWYER\90398-004_WEST PARISH FILTER WTP\PROJECT FILES\LANDSCAPE\L-104 Saved by KCAMPOS Save date: 4/16/2024 11:29 AM
PLOT DATE: 4/16/2024 11:29 AM BY: KCAMPOS

GENERAL NOTE

GN-1 MOCK-UP – PROVIDE MOCK-UP WALL AT THE PROJECT SITE. REFER TO ARCHITECTURAL DRAWINGS FOR DETAILS ASSOCIATED WITH MOCK-UP WALL. SET MOCK WALL ON 8-FOOT BY 4-FOOT BY 6-INCH-THICK CONCRETE PAD AND CURB WITH 10 X 10 WWM OVER 6-INCH GRAVEL BED. REFER TO STRUCTURAL DRAWINGS FOR CONCRETE CURB FOR MOCK-UP WALL. PROVIDED ALL ASSEMBLIES TO COMPLETE MOCK-UP WALL AS INDICATED IN ARCHITECTURAL DETAILS.

DIVISION 1 GENERAL REQUIREMENTS

01 11 00.0 - VALVE OPERATOR MINIMUM OF TWO (2) VALVE OPERATORS TO BE SALVAGED IN ACCORDANCE WITH SECTION 01 11 00. SALVAGED VALVE OPERATORS TO BE CLEANED PRIOR TO INSTALLATION IN LOBBY AT LOCATION INDICATED ON THE ARCHITECTURAL DRAWINGS. USING EXISTING MOUNTING HOLES, SECURE VALVE OPERATORS TO FLOOR SLAB WITH APPROVED FASTENERS IN ACCORDANCE WITH SECTION 05 05 23 – METAL FASTENING.

DIVISION 3 CONCRETE

03 15 00 CONCRETE ACCESSORIES

03 15 00.0 - EXPANSION JOINT MATERIAL PROVIDE CONCRETE EXPANSION JOINT MATERIAL IN ACCORDANCE WITH SECTION 03 15 00 – CONCRETE ACCESSORIES.

03 30 00 CAST-IN-PLACE CONCRETE

03 30 00.0 - OPENINGS COORDINATE LOCATIONS OF FLOOR AND ROOF OPENINGS FOR PIPES, DUCT WORK, CONDUIT AND GRATING.

03 30 00.1 - CONCRETE FLOOR FINISH COORDINATE FINISH OF FLOOR AS INDICATED IN THE FINISH SCHEDULE FOR ALL FLOOR AND WALL SURFACES. REFER TO SECTION 03 35 00 FOR REQUIREMENTS OF FINISH SURFACES OF CONCRETE.

03 30 00.2 - ELEVATOR CAB SLAB PROVIDE CLASS 40LW STRUCTURAL LIGHTWEIGHT CONCRETE, WITH THIN SET BED WITH PORCELAIN TILE IN ELEVATOR CAB RECESS OF 1 ¼-INCH. REFER TO SPECIFICATION SECTION 09 30 00 – TILING FOR TILE TO BE INSTALLED AT ELEVATOR CAB FLOOR. REFER TO NOTE 14 21 23.6 – ELEVATOR CAB FLOOR RECESS.

03 30 00.3 - ELEVATOR PIT DEPTH ELEVATOR PIT DEPTH TO BE 5-FEET MAXIMUM WITH A 2-FOOT MAXIMUM DEEP SUMP. CONTRACTOR TO COORDINATE THE PIT DEPTH WITH THE ELEVATOR MANUFACTURER.

03 30 00.4 - CONCRETE TOPPING PROVIDE CONCRETE TOPPING ON PRECAST CONCRETE PLANKS AT EQUIPMENT AND VIEWING PLATFORMS IN ACCORDANCE WITH SECTION 03 30 00. SEE STRUCTURAL DWGS FOR DETAILS.

03 35 00 CONCRETE FINISHING

03 35 00.0 - EXTERIOR CONCRETE FINISH PROVIDE NON-SLIP SHAKE ON AGGREGATE THROUGHOUT ALL HORIZONTAL CONCRETE WALKING SURFACES, CONCRETE STAIRS, RAMP, RAMP PLATFORMS, AND ALL SIDEWALKS. REFER TO SECTION 03 35 00 - CONCRETE FINISHES FOR ADDITIONAL INFORMATION.

03 35 00.1 - EXPOSED CONCRETE FINISH PROVIDE TYPE III GROUT CLEANED FINISH AT ALL EXPOSED INTERIOR CONCRETE AND CONCRETE COLUMNS THROUGHOUT ENTIRE PROJECT.

03 35 00.2 - EXPOSED CONCRETE WALLS ALL EXTERIOR EXPOSED CONCRETE ASSOCIATED WITH THE EXTERIOR WALL OF THE BUILDING AND TANKS SHALL BE IN ACCORDANCE WITH SECTION 03 35 00 CONCRETE FINISHES UTILIZING FORM LINER PANELS, FORMED JOINTS AT LOCATIONS AS INDICATED ON THE CONTRACT DOCUMENTS. FORMS ARE REQUIRED TO COMPLY WITH VISUAL ASPECT OF THE WORK.

03 35 00.3 - CONCRETE AT CONTAINMENT AREA REFER TO NOTE 09 97 00.0 AND 09 97 00.1 FOR CHEMICAL-RESISTANT COATINGS. PROVIDE CONCRETE FINISH PREPARED IN ACCORDANCE WITH MANUFACTURERS REQUIREMENTS FOR CHEMICAL-RESISTANT COATINGS SUBSTRATE PREPARATION SHALL BE WORK OF SECTION 09 97 00.

03 35 00.4 - HEAVY-DUTY CONCRETE FLOOR FINISH PROVIDE HEAVY-DUTY CONCRETE FLOOR FINISHING WITH NON-SLIP SHAKE ON AGGREGATE THROUGHOUT ALL INTERIOR HORIZONTAL CONCRETE SURFACES WHERE INDICATED IN THE FINISH SCHEDULE.

DIVISION 4 MASONRY

04 05 13 - MASONRY MORTARING (THIS SECTION IS PART OF THE FILED SUB BID REQUIRED FOR MASONRY WORK)

04 05 13.0 - COLLAR JOINTS PROVIDE COLLAR JOINTS IN MULTI-WYTHE MASONRY PARTITIONS - FILL THE VERTICAL SPACE BETWEEN WYTHES SOLIDLY WITH MORTAR BY PARGING THE IN-PLACE WYTHE AND SHOVE UNITS INTO THE PARGING AT ALL EXTERIOR AND INTERIOR AND OR MULTI-WYTHE PARTITION (DO NOT FILL CAVITY OF CAVITY WALL OF CHASE WALL CONSTRUCTION).

04 05 19 - MASONRY ANCHORAGE AND REINFORCING (THIS SECTION IS PART OF THE FILED SUB BID REQUIRED FOR MASONRY WORK)

04 05 19.0 - TOP OF MASONRY WALL SECURE TOP OF ALL MASONRY WALLS TO UNDERSIDE OF STRUCTURE AS INDICATED ON STRUCTURAL DRAWINGS AND IN ACCORDANCE WITH SECTION 04 05 19 – MASONRY ANCHORAGE AND REINFORCING.

04 05 19.1 - EXTERIOR MASONRY WALL VERTICAL REINFORCING REFER TO STRUCTURAL DRAWINGS FOR VERTICAL REINFORCING. REFER TO 04 05 19 MASONRY ANCHORAGE AND REINFORCING AND STRUCTURAL DRAWING FOR LINTELS AND BOND BEAMS. ALL VERTICAL REINFORCING SHALL BE PLACED IN FULLY GROUTED CELLS.

04 05 19.2 - INTERIOR MASONRY WALL VERTICAL REINFORCING REFER TO STRUCTURAL DRAWINGS FOR VERTICAL REINFORCING. ALL VERTICAL REINFORCING SHALL BE PLACED IN FULLY GROUTED CELLS. REFER TO SECTION 04 22 23.23 PREFACED CONCRETE UNIT MASONRY AND STRUCTURAL DRAWINGS FOR LINTELS AND BOND BEAMS.

04 05 19.3 - MASONRY WALL HORIZONTAL REINFORCEMENT INSTALL CONTINUOUS HEAVY DUTY METAL TRUSS MESH REINFORCEMENT AT EVERY TWO BLOCK COURSES. PROVIDE METAL TRUSS MESH REINFORCEMENT IN STAINLESS STEEL FOR EXTERIOR WALLS AND IN GALVANIZED STEEL FOR INTERIOR WALLS.

04 05 19.4 - BOND BEAMS REFER TO ARCHITECTURAL DRAWINGS FOR PARTITION TYPES. REFER TO STRUCTURAL DRAWINGS FOR AND TOP OF MASONRY WALL ANCHORAGE AND CONCRETE MASONRY LINTEL SCHEDULE AND REINFORCING FOR ALL BOND BEAMS AT TOP OF WALL CONDITIONS. ALL REINFORCING SHALL BE PLACED IN FULLY GROUTED CELLS.

04 05 19.5 - MASONRY WALL ATTACHMENT SECURE EXTERIOR AND INTERIOR MASONRY WALLS TO BUILDING STRUCTURE IN ACCORDANCE STRUCTURAL DRAWINGS AND SECTION 04 05 19 – MASONRY ANCHORAGE AND REINFORCING.

04 05 19.6 - MASONRY VENEER SUPPORT PROVIDE GALVANIZED STEEL BENT PLATE IN ACCORDANCE WITH STRUCTURAL DRAWINGS AT ALL HEAD AND JAMB CONDITIONS WHERE OPENINGS OCCUR IN MASONRY VENEER WITH EXTERIOR MASONRY BACKUP. EXPOSED STEEL TO BE PAINTED IN ACCORDANCE WITH SECTION 09 90 00 PAINTING. REFER TO NOTE 04 22 23.23.9 HORIZONTAL CONTROL JOINTS FOR ALL MASONRY VENEER SUPPORT LOCATIONS.

04 05 19.7 - MASONRY RELIEF ANGLE PROVIDE GALVANIZED STEEL BENT PLATE WHERE MASONRY VENEER TERMINATES AT ROOF AND AT MASONRY RELIEF LOCATIONS INDICATED ON THE ARCHITECTURAL DRAWINGS. REFER TO STRUCTURAL DRAWINGS FOR GALVANIZED STEEL BENT PLATE DETAIL. REFER TO NOTE 04 22 23.23.9 HORIZONTAL CONTROL JOINTS FOR ALL MASONRY RELIEF ANGLE LOCATIONS.

04 05 19.8 - CAVITY DRAINAGE MAT PROVIDE CAVITY DRAINAGE MAT IN THICKNESS OF ACTUAL AIR SPACE MINUS TOLERANCES RECOMMENDED BY MANUFACTURER.

04 05 19.9 - WEEP VENTS PROVIDE ROWS OF WEEP VENTS IN THE HEAD JOINTS OF THE FIRST COURSE OF MASONRY IMMEDIATELY ABOVE ALL CONCEALED FLASHING. SPACE WEEP VENTS 16 INCHES ON CENTERS HORIZONTALLY. WEEP VENTS SHALL BE SIZED IN ACCORDANCE WITH SECTION 04 05 19.

04 05 19.10 - AIR AND VAPOR BARRIERS ALL MASONRY JOINTS ON SURFACES TO RECEIVE AIR AND VAPOR BARRIERS TO BE FLUSH JOINTS. COORDINATE THE INSTALLATION OF TRANSITION MEMBRANES PRIOR TO THE START OF WORK. TRANSITION MEMBRANES AT THE BASE OF MASONRY WALLS SHALL BE INSTALLED PRIOR TO START OF WORK OF THE MASONRY WALL. REFER TO SECTION 07 27 26 – FLUID-APPLIED MEMBRANE AIR BARRIERS FOR ALL WORK ASSOCIATED WITH MASONRY EXTERIOR WALL SYSTEMS. (1)

04 22 23.23 - PREFACED CONCRETE UNIT MASONRY (THIS SECTION IS PART OF THE FILED SUB BID REQUIRED FOR MASONRY WORK)

04 22 23.23.0 - GROUND FACE BLOCK ALL MASONRY SHALL BE GROUND FACE BLOCK UNLESS NOTED OTHERWISE.

04 22 23.23.1 - EXTERIOR MASONRY BACKUP ALL EXTERIOR MASONRY WALL SYSTEMS SHALL BE COMPRISED OF GFB BACKUP MASONRY WITH MASONRY VENEER OR CEMENTITIOUS WALL PANEL SYSTEM AS INDICATED ON ARCHITECTURAL DRAWINGS. BACKUP UNIT MASONRY SHALL HAVE EXPOSED SIDES FINISHED AT THE INTERIOR FACE. EXTERIOR MASONRY WALLS SHALL BE ANCHORED BY REINFORCING INTO CONCRETE SLABS OR UNDERSIDES OF BEAMS IN ACCORDANCE WITH THE STRUCTURAL DRAWINGS AND SECTION 04 05 19 – MASONRY ANCHORAGE AND REINFORCING.

04 22 23.23.2 - INTERIOR MASONRY WALLS ALL INTERIOR MASONRY WALLS SHALL BE PER THE PARTITION TYPES ON ARCHITECTURAL DRAWINGS AND WITH EXPOSED SIDES FINISHED UNLESS OTHERWISE NOTED ON THE FINISH SCHEDULE. INTERIOR MASONRY WALLS SHALL BE ANCHORED BY REINFORCING INTO CONCRETE SLABS OR UNDERSIDES OF BEAMS IN ACCORDANCE WITH THE STRUCTURAL DRAWINGS AND SECTION 04 05 19 – MASONRY ANCHORAGE AND REINFORCING.

04 22 23.23.3 - INTERIOR MASONRY CHASE WALL ALL INTERIOR MASONRY CHASE WALLS SHALL BE PER THE PARTITION TYPES ON ARCHITECTURAL DRAWINGS AND WITH EXPOSED SIDES FINISHED UNLESS RECEIVING TILE AS NOTED ON THE FINISH SCHEDULE. INTERIOR MASONRY CHASE WALLS SHALL BE ANCHORED BY REINFORCING INTO CONCRETE SLABS OR UNDERSIDES OF BEAMS IN ACCORDANCE WITH THE STRUCTURAL DRAWINGS AND SECTION 04 05 19 – MASONRY ANCHORAGE AND REINFORCING.

04 22 23.23.4 - MASONRY VENEER PROVIDE SPLIT FACE HALF-HEIGHT BLOCK VENEER SECURED TO EXTERIOR MASONRY BACKUP WORK OF SECTION 04 22 23.23.1 IN AREAS INDICATED ON THE ARCHITECTURAL DRAWINGS AND IN ACCORDANCE WITH SECTION 04 05 19 – MASONRY ANCHORAGE AND REINFORCING. PROVIDE SPECIAL SHAPE RETURN CORNER SPLIT FACE BLOCK AT CORNERS OF THE BUILDING TO MAINTAIN MASONRY COURSING.

04 22 23.23.5 - CORNER STONE PROVIDE CORNER STONE WITH POCKET TO HOUSE TIME CAPSULE. CORNER STONE TO BE SET FLUSH WITH EXTERIOR FACE OF WALL SYSTEM. CORNER STONE DEPTH SHALL BE SET INTO FULL DEPTH OF BACKUP WALL .

04 22 23.23.6 - WATER TABLE PROVIDE GROUND FACE WATER TABLE BLOCK AT TOP OF SPLIT FACE VENEER. SECURED TO EXTERIOR MASONRY BACKUP WORK OF 04 22 23.23.1 IN AREAS INDICATED ON THE ARCHITECTURAL DRAWINGS AND IN ACCORDANCE WITH SECTION 04 05 19 – MASONRY ANCHORAGE AND REINFORCING.

04 22 23.23.7 - GROUND FACE ACCENT BAND PROVIDE GROUND FACE HALF-HEIGHT BLOCK VENEER AS ACCENT BAND. SECURE GROUND FACE ACCENT BAND TO EXTERIOR MASONRY BACKUP WORK OF SECTION 04 22 23.23.1 IN AREAS INDICATED ON THE ARCHITECTURAL DRAWINGS AND IN ACCORDANCE WITH SECTION 04 05 19 – MASONRY ANCHORAGE AND REINFORCING.

04 22 23.23.8 - CONTROL JOINTS PROVIDE PREFORMED GASKET IN CONTINUOUS LENGTHS, BACKER ROD AND SEALANT AT ALL CONTROL JOINTS. BUTT AND CORNER JOINTS SHALL BE SEALED IN ACCORDANCE WITH MANUFACTURER'S INSTRUCTIONS. CONTROL JOINTS SHALL BE SIZED AS INDICATED ON THE CONTRACT DRAWINGS. HORIZONTAL JOINT REINFORCEMENT SHALL NOT CONTINUE THROUGH CONTROL JOINTS.

04 22 23.23.9 - HORIZONTAL CONTROL JOINT PROVIDE FLASHING WITH WEEP VENTS ABOVE MASONRY VENEER SUPPORT AND RELIEF ANGLES WITH COMPRESSIBLE FILLER BELOW. PROVIDE BACKER ROD AND SEALANT AT ALL HORIZONTAL CONTROL JOINTS.

04 22 23.23.10 - GFB SILL PROVIDE SOLID GROUND FACED SILL BLOCK WITH FINISH AT TOP AND ONE FACE AT ALL WINDOW OPENING LOCATIONS AS PART OF MASONRY BACKUP WORK OF NOTE 04 22 23.23.1.

04 22 23.23.11 - MASONRY PARAPETS ALL MASONRY PARAPETS SHALL BE MINIMUM 8-INCH CONCRETE BLOCK PER THE DETAILS ON ARCHITECTURAL DRAWINGS. HORIZONTAL REINFORCING SHALL OCCUR AT EVERY COURSE. TOP COURSE TO HAVE BOND BEAM WITH HORIZONTAL REINFORCING FULLY GROUTED IN ACCORDANCE WITH STRUCTURAL DRAWINGS. PARAPET MASONRY CELLS SHALL BE FULLY GROUTED AT ALL REINFORCING INTO CONCRETE ROOF DECK OR SLABS IN ACCORDANCE WITH THE STRUCTURAL DRAWINGS AND SPECIFICATION SECTION 04 05 19 – MASONRY ANCHORAGE AND REINFORCING.

(1) **04 22 23.23.12 - UNIT MASONRY PARTITIONS** IN THE EVENT THAT A PARTITION TYPE IS NOT INDICATED ON THE CONTRACT DOCUMENTS, THE MASONRY SUBCONTRACTOR SHALL PROVIDE A FULL HEIGHT (RUN TO UNDERSIDE OF STRUCTURE) MULTI-WYTHE UNIT MASONRY PARTITION IN COORDINATION OF THE FINISH SCHEDULE. IF THE THICKNESS OF THE PARTITION IS NOT INDICATED, THE MINIMUM THICKNESS OF PARTITION SHALL BE 12-INCHES THICK. IF THE FINISH OF THE PARTITION CANNOT BE DETERMINED THEN THE PARTITION SHALL BE CONSTRUCTED OF GROUND FACED BLOCK FINISHED ON BOTH SIDES. THE PARTITION SHALL BE DEEMED TO BE A 2-HOUR FIRE RATED PARTITION OF THE FIRE RATING CANNOT BE DETERMINED. CONFLICTS BETWEEN THE PARTITION TYPE AND FINISH SCHEDULE SHALL BE BROUGHT TO THE ENGINEER ATTENTION FOR ALL DETERMINATIONS OF PARTITION TYPES REQUIRED.

04 43 13 - STONE MASONRY (THIS SECTION IS PART OF THE FILED SUB BID REQUIRED FOR MASONRY WORK)

04 43 13.0 - STONE VENEER PROVIDE BOSTON BLEND ASHLAR FULL BED STONE VENEER SECURED TO EXTERIOR MASONRY BACKUP WORK OF 04 22 23.23.1 AND 05 40 00.2 EXTERIOR METAL STUDS IN AREAS INDICATED ON THE ARCHITECTURAL DRAWINGS AND IN ACCORDANCE WITH SECTIONS 04 43 13 – STONE MASONRY AND 04 05 19 – MASONRY ANCHORAGE AND REINFORCING.

04 43 13.1 - STONE WINDOW SILL PROVIDE BLUESTONE WINDOW SILL WITH DRIP EDGE AT WINDOW PENETRATIONS AT STONE VENEER. SECURE STONE WINDOW SILL TO EXTERIOR MASONRY BACKUP WORK OF SECTIONS 04 22 23.23.1 AND 05 40 00.2 EXTERIOR METAL STUDS IN AREAS INDICATED ON THE ARCHITECTURAL DRAWINGS AND IN ACCORDANCE WITH SECTIONS 04 43 13 – STONE MASONRY AND 04 05 19 – MASONRY ANCHORAGE AND REINFORCING.

04 43 13.2 - STONE WATER TABLE PROVIDE BLUESTONE WATER TABLE SILL WITH DRIP EDGE AT TOP OF STONE VENEER SECURED TO EXTERIOR BACKUP WORK OF 05 40 00.2 EXTERIOR METAL STUDS IN AREAS INDICATED ON THE ARCHITECTURAL DRAWINGS AND IN ACCORDANCE WITH SECTIONS 04 43 13 – STONE MASONRY AND 04 05 19 – MASONRY ANCHORAGE AND REINFORCING.

04 43 13.3 - STONE COPING PROVIDE BLUESTONE COPING WITH PERIMETER DRIP EDGE, TO CAP STONE VENEER AND FOUNDATION AT BASE OF SITE ENTRY SIGN. REFER TO DETAILS ON ARCHITECTURAL DRAWINGS FOR SIZE AND PROFILE. DESIGN OF REINFORCING AND EMBEDDED SLOTS OR GROVES TO SECURE STONE COPING TO THE STRUCTURE SHALL BE WORK OF SECTION 04 43 13 - STONE MASONRY. LEAVE HEAD JOINTS IN COPINGS AND PROJECTING COMPONENTS OPEN FOR EXTRUDED METAL TEE AND SEALANT IN ACCORDANCE WITH SECTION 07 90 00 – JOINT FILLERS, SEALANTS AND CAULKING. REFER TO NOTE 07 90 00.5 EXTRUDED METAL TEE. TUCK POINT BED JOINTS TO A SLIGHT CONCAVE PROFILE, EXCEPT THOSE JOINTS DESIGNATED TO RECEIVE EXTRUDED METAL TEE AND JOINT SEALANT.

04 43 13.4 - ADHERED STONE MASONRY PROVIDE ADHERED STONE MASONRY ON CEMENTITIOUS BACKER BOARD OVER COLD-FORMED METAL FRAMING. REFER TO NOTES 05 40 00.0 COLD-FORMED METAL FRAMING AND 09 29 00.14 CEMENTITIOUS BACKER BOARD.

04 43 13.5 - EXTRUDED METAL TEE PROVIDE SEALANT AND EXTRUDED METAL TEE AT ALL STONE COPING JOINTS.

DIVISION 5 METALS

05 05 23.02 MISCELLANEOUS METAL FASTENINGS

05 05 23.02.0 - MISCELLANEOUS METAL FASTENINGS ALL WORK ASSOCIATED WITH FASTENING OF DEVICES AND EQUIPMENT TO WORK OF SECTION 07 42 63 - CEMENTITIOUS WALL PANELS SHALL BE SECURED DIRECTLY TO SUBSTRATE USING ADHESIVE ANCHORS IN ACCORDANCE WITH SECTION 05 05 23.02 – MISCELLANEOUS METAL FASTENINGS. ATTACHMENT SHALL NOT BEAR DIRECTLY ON CEMENTITIOUS PANELS AND SHALL BE INSTALLED IN ACCORDANCE WITH CEMENTITIOUS PANEL MANUFACTURER'S REQUIREMENTS. SUBMIT DOCUMENTATION OF PROPOSED ATTACHMENT METHOD FOR APPROVAL.

05 40 00 COLD-FORMED METAL FRAMING

05 40 00.0 - COLD-FORMED METAL FRAMING ALL METAL STUD FRAMING TO BE PROVIDED AS WORK OF SECTION 05 40 00 - COLD-FORMED METAL FRAMING.

05 40 00.1 - INTERIOR METAL STUDS PROVIDE MINIMUM 3-5/8-INCH GALVANIZED METAL STUD WALL FRAMING SPACED MAXIMUM 16-INCHES ON CENTER IN ACCORDANCE WITH SECTION 05 40 00. INTERIOR METAL STUDS TO RUN FROM FLOOR SLAB TO UNDERSIDE OF STRUCTURE ABOVE.

05 40 00.2 - EXTERIOR METAL STUDS PROVIDE MINIMUM 6-INCH GALVANIZED METAL STUD WALL FRAMING SPACED MAXIMUM 16-INCHES ON CENTER IN ACCORDANCE WITH SECTION 05 40 00. EXTERIOR METAL STUDS TO RUN FROM FLOOR SLAB TO UNDERSIDE OF STRUCTURE ABOVE. PROVIDE SILL SEALER WHERE EXTERIOR METAL STUDS BEAR ON CONCRETE SLAB. REFER TO NOTE 07 90 00.4 SILL SEALER.

05 40 00.3 - SUB-GIRT FRAMING PROVIDE GALVANIZED METAL SUB-GIRT FRAMING SPACED MAXIMUM 16-INCHES ON CENTER IN ACCORDANCE WITH SECTION 05 40 00. COORDINATE SUB-GIRT FRAMING DEPTH WITH WORK OF 07 21 00.1. CAVITY WALL RIGID INSULATION. PROVIDE SUB-GIRTS IN ADEQUATE QUANTITY AND GAUGE FOR THE SUPPORT OF CEMENTITIOUS WALL PANELS EXTENDING ABOVE ROOF SLAB.

05 40 00.4 - EXTERIOR FURRING PROVIDE MINIMUM 7/8-INCH GALVANIZED METAL FURRING SPACED MAXIMUM 16-INCHES ON CENTER IN ACCORDANCE WITH SECTION 05 40 00.

05 40 00.5 - HEAVY GAUGE CLIP ANGLE PROVIDE ADEQUATE QUANTITY AND GAUGE CLIP ANGLE S TO SECURE SUB-GIRT FRAMING EXTENDING ABOVE ROOF SLAB AND WORK OF 05 40 00.2 – EXTERIOR METAL STUDS TO SECURE TO CONCRETE STRUCTURE. REFER TO NOTE 05 40 00.3 SUB-GIRT FRAMING AND SECTION 05 40 00 – COLD-FORMED METAL FRAMING.

05 40 00.6 - BOX HEADER PROVIDE BOX HEADERS AT ALL OPENINGS IN CONFORMANCE WITH THE REQUIREMENTS OF SECTION 05 40 00.

05 40 00.7 - LINTEL AND JAMB ANGLES PROVIDE ADEQUATE GAUGE ANGLES AT LINTELS AND JAMBS OF OPENINGS OCCURING IN EXTERIOR METAL STUD BACKUP TO SUPPORT STONE VENEER. REFER TO NOTES 05 40 00.2 EXTERIOR METAL STUDS AND 04 43 13.0 STONE VENEER.

05 40 00.8 - CANTILEVERED POST PROVIDE CANTILEVERED POST FOR END OF WALL SUPPORT. CANTILEVERED POST TO BE MINIMUM 3 1/2-INCH BY 3 1/2-INCH BY 1/4-INCH THICK HSS IN ACCORDANCE WITH SECTION 05 12 00 STRUCTURAL STEEL.

05 51 00 METAL STAIRS

05 51 00.0 - METAL STAIR PROVIDE METAL STAIR WITH HANDRAILS IN ACCORDANCE WITH SECTION 05 51 00 – METAL STAIRS. SEE STRUCTURAL DWGS FOR DETAILS.

05 51 00.1 - ENCLOSED STAIR PROVIDE STEEL STAIR WITH CONCRETE-FILLED METAL PAN TREADS AND LANDINGS. RISERS SHALL BE STEEL PROVIDE HANDRAILS IN ACCORDANCE WITH NOTE SERIES 05 52 00. PROVIDE NON-SLIP FLOORING AGGREGATE TO CONCRETE SURFACES COORDINATED WITH NOTE 03 35 00.1.

05 51 00.2 - OPEN STAIR PROVIDE STEEL STAIR WITH WOOD STAIR TREADS AND LANDINGS IN ACCORDANCE WITH NOTE 06 41 00.4 WOOD STAIR TREADS. RISERS SHALL BE STEEL MESH PER SECTION 05 51 00. PROVIDE HANDRAILS IN ACCORDANCE WITH NOTE 05 52 00.7 TYPE III RAILING.

05 51 33 - LADDERS (THIS SECTION IS PART OF THE FILED SUB BID REQUIRED FOR MISCELLANEOUS AND ORNAMENTAL IRON)

05 51 33.0 - LADDERS PROVIDE LADDERS IN ACCORDANCE WITH SECTION 05 51 33 – LADDERS. COORDINATE DEPTH, CLEARANCE, AND HEIGHT OF VERTICAL LADDER IN ELEVATOR SERVICE PIT WITH ELEVATOR REQUIREMENTS.

05 51 33.1 - ROOF LADDER PROVIDE ALUMINUM ROOF LADDERS IN LOCATIONS SHOWN ON THE STRUCTURAL DRAWINGS AND IN ACCORDANCE WITH SECTION 05 51 33 – LADDERS.

05 52 00 - METAL FABRICATIONS - (THIS SECTION IS PART OF THE FILED SUB BID REQUIRED FOR MISCELLANEOUS AND ORNAMENTAL IRON)

05 52 00.0 - GUARDS AND RAILINGS PROVIDE METAL GUARDS AND RAILINGS AT ALL STAIRS IN ACCORDANCE WITH SECTION 05 52 00 GUARDS AND RAILINGS. RAILINGS ALONG WALLS SHALL BE PROVIDED WITH WALL MOUNTED SUPPORT BRACKETS. FREE STANDING TYPE SHALL BE PROVIDED WITH WELDED ON BASE MOUNTING FLANGES UNLESS NOTED OTHERWISE. INSTALLATION SHALL UTILIZE ADHESIVE ANCHORS.

05 52 00.1 - ROOF RAILING SYSTEM PROVIDE ALUMINUM ROOF RAILING SYSTEMS IN TYPES SHOWN ON CONTRACT DRAWINGS. REFER TO STRUCTURAL DRAWINGS FOR ROOF STAIR AND RAILING.

05 52 00.2 - OPEN SIDE HANDRAIL PROVIDE ALUMINUM OPEN SIDE HANDRAIL REFER TO ARCHITECTURAL DRAWINGS AND SECTION 05 52 00 .

05 52 00.3 - CLOSED SIDE HANDRAIL PROVIDE ALUMINUM CLOSED SIDE HANDRAIL REFER TO ARCHITECTURAL DRAWINGS AND SECTION 05 52 00.

05 52 00.4 - TYPE I RAILING PROVIDE TYPE I ALUMINUM PIPE RAILING IN ACCORDANCE WITH SECTION 05 52 00. REFER TO STRUCTURAL DRAWINGS FOR LOCATIONS.

05 52 00.5 - REMOVABLE TYPE I RAILING PROVIDE TYPE I ALUMINUM REMOVABLE SLEEVE MOUNTED HANDRAILS IN ADDITION TO THE HANDRAILS INDICATED ON THE DRAWINGS. REFER TO STRUCTURAL DRAWINGS FOR LOCATIONS.

05 52 00.6 - TYPE II RAILING PROVIDE TYPE II ALUMINUM RAILING SYSTEM AT ENCLOSED STAIRS, VIEWING PLATFORM AND AS INDICATED ON THE ARCHITECTURAL AND STRUCTURAL DRAWINGS IN ACCORDANCE WITH SECTION 05 52 00.

05 52 00.7 - TYPE III RAILING PROVIDE STAINLESS STEEL RAILING SYSTEM AT OPEN STAIR AND FLOOR OPENING IN ADMINISTRATION AREA LOBBY IN ACCORDANCE WITH SECTION 05 52 00.

05 52 00.8 - TOE GUARDS PROVIDE TOE GUARDS AT ALL HORIZONTAL OPEN SIDE RAILINGS ADJOINING OPENINGS AND STAIR PLATFORMS ADJOINING CLEAR OPENINGS TO FLOORS OR SLABS BELOW.

05 52 00.9 - SELF-CLOSING GATE PROVIDE SELF-CLOSING GATE WITH NO LATCH AT ENCLOSED STAIRS WHERE INDICATED ON THE DRAWINGS. GATE SHALL SWING IN THE DIRECTION OF EGRESS.

05 52 00.10 - GUARDRAIL POST EXTENSION PROVIDE STAINLESS STEEL POST IN SAME MATERIAL AND DIAMETER AS RAILING POST WORK OF NOTE 05 52 00.7 TYPE III RAILING. PROVIDE INTERNAL SLEEVE CONNECTION TO STAIR GUARDRAIL POST AND TOP MOUNTING AT BASE OF GUARDRAIL POST EXTENSION.

05 53 00 - GRATING

05 53 00.0 - GRATINGS PROVIDE GRATINGS IN ACCORDANCE WITH SECTION 05 53 00 – GRATINGS, CHECKERED FLOOR PLATES, AND ACCESS DOORS. REFER TO STRUCTURAL DRAWINGS FOR LOCATIONS OF GRATINGS.

05 55 00 - STAIR TREADS AND NOSINGS

05 55 00.0 - STAIR TREADS AND NOSINGS PROVIDE STAIR TREADS AND SAFETY STAIR NOSINGS IN ACCORDANCE WITH SECTION 05 55 00 – STAIR TREADS AND NOSING.

DIVISION 6 WOOD AND PLASTICS

06 10 00 ROUGH CARPENTRY

06 10 00.0 - TREATED TIMBER AND LUMBER PROVIDE TREATED WOOD AND LUMBER AGAINST CONCRETE AND ALL EXTERIOR EXPOSED BLOCKING.

06 10 00.1 - WOOD BLOCKING ALL BLOCKING USED FOR ROOFING AND IN EXTERIOR WALLS TO BE PRESERVATIVE TREATED LUMBER.

06 41 00 ARCHITECTURAL WOOD CASEWORK

06 41 00.0 - CUSTOM CABINETRY PROVIDE CUSTOM CABINETRY CONSISTING OF WALL AND BASE CABINETS IN FLUSH OVERLAY DESIGN INCLUDING ALL WORK ASSOCIATED WITH CONTINUOUS COUNTERTOP PER NOTE 06 41 00.1. MATERIALS SHALL BE IN ACCORDANCE WITH SECTION 06 41 10.

06 41 00.1 - QUARTZ COUNTERTOP PROVIDE QUARTZ COUNTERTOP. MATERIAL SHALL BE 3/4-INCH (20MM) THICK IN IN ACCORDANCE WITH SECTION 06 41 00. PROVIDE 26-INCH DEEP COUNTERTOP WITH 1 1/2-INCH NOSING EDGE FOR LENGTH AS INDICATED ON THE CONTRACT DOCUMENTS WITH BACKSPLASH IN HEIGHTS AS INDICATED ON THE ARCHITECTURAL DRAWINGS. PROVIDE 1/8-INCH RADIUS EASED EDGE TOP AND BOTTOM ALONG PERIMETER OF ALL COUNTER TOPS.

06 41 00.2 - QUARTZ WINDOW SILL PROVIDE QUARTZ WINDOW SILL. MATERIAL SHALL BE 3/4-INCH (20MM) THICK IN IN ACCORDANCE WITH SECTION 06 41 00 QUARTZ WINDOW SILL TO OVERHANG FINISHED FACE OF WALL BY 3/4-INCH FOR LENGTH AND DEPTH AS INDICATED ON THE CONTRACT DOCUMENTS. PROVIDE 1/8-INCH RADIUS EASED EDGE TOP AND BOTTOM ALONG EXPOSED FACE OF QUARTZ WINDOW SILL.

06 41 00.3 - FLOATING TROUGH SINK PROVIDE FLOATING TROUGH SINK WITH SLOPED SINK BOTTOM AND CONTINUOUS INTEGRATED SLOTTED DRAIN. FLOATING TROUGH SINK TO BE WALL MOUNTED WITH CONCEALED SUPPORT SYSTEM. REFER TO SECTION 06 41 00 AND ARCHITECTURAL DRAWINGS FOR DETAILS.

06 41 00.4 - WOOD STAIR TREADS PROVIDE WOOD STAIR TREADS AND LANDING AT WORK OF NOTE 05 51 00.2 OPEN STAIR IN ACCORDANCE WITH SECTION 06 41 00 ARCHITECTURAL CASEWORK .

06 41 00.5 - MILLSTONE SEATING SALVAGED MILLSTONES TO BE PROTECTED AND STORED FOR USE ON SITE. REFER TO LANDSCAPE ARCHITECTURE DRAWINGS FOR LOCATIONS AND CONFIGURATIONS.

06 41 00.6 - COPPER DOOR ASSEMBLY SALVAGED COPPER DOOR ASSEMBLY TO BE CLEANED AND PREPARED FOR INSTALLATION AT 09 29 00.0 GYPSUM BOARD SYSTEM IN LOBBY. REFER TO ELECTRICAL DRAWINGS FOR LIGHTING REQUIREMENTS IN PARTITION.

06 41 00.7 - FLOATING SHELVES PROVIDE WOOD WALL MOUNTED FLOATING SHELVES WHERE INDICATED ON THE ARCHITECTURAL DRAWINGS AS WORK OF 06 41 00.0 CUSTOM CABINETRY. PROVIDE BLOCKING IN PARTITION WHERE SHELF IS TO BE MOUNTED.

06 41 00.8 - SUSPENDED SHELVES PROVIDE 8-INCH WIDE WOOD SHELVES WORK OF SECTION 06 41 00 ARCHITECTURAL CASEWORK MOUNTED IN SPIDER FITTINGS WORK OF 05 52 00.7 TYPE III RAILING.

06 51 00 FRP GRATINGS AND RAILINGS

06 51 00.0 - GRATINGS, TREADS AND PLATFORMS PROVIDE FRP WITH GRIT ABRASIVE FOR ALL GRATINGS INCLUDING BUT NOT LIMITED TO ALL: STAIR TREADS, STAIR PLATFORMS, AND CONTAINMENT AREAS IN ACCORDANCE WITH DETAILED 06 51 00 AND AS SHOWN ON THE STRUCTURAL DRAWINGS. THE COLOR FOR ALL GRATING TREADS, RISERS AND PLATFORMS SHALL BE SHALL BE GRAY.

06 51 00.1 - FIBERGLASS RAILINGS PROVIDE FIBERGLASS RAILING SYSTEM WITH INTERMEDIATE RAIL AND TOE GUARDS IN ACCORDANCE WITH SECTION 06 51 00 AND AS SHOWN ON THE STRUCTURAL DRAWINGS.

DIVISION 7 THERMAL AND MOISTURE PROTECTION

07 13 54 SHEET MEMBRANE WATERPROOFING - (THIS SECTION IS PART OF THE FILED SUB BID REQUIRED FOR WATERPROOFING, DAMPROOFING, AND CAULKING)

07 13 54.0 - SHEET MEMBRANE WATERPROOFING PROVIDE PRE-APPLIED SHEET MEMBRANE WATERPROOFING THROUGHOUT FOUNDATION WALLS, GRADE BEAMS, AND SLABS BELOW EL 460 AT THE WATER TREATMENT PLANT AND BELOW EL 448 AT THE DEWATERING BUILDING, EXCLUDING WATER HOLDING STRUCTURES. PRE-APPLIED SHEET MEMBRANE WATERPROOFING SHALL INCLUDE BUT NOT LIMITED TO CONCRETE FOUNDATION CONDITIONS SUCH AS ELEVATOR PIT AND SUMP PIT, PIPE TRENCHES, AND PENETRATIONS BELOW THE FLOOR SLAB AS A COMPLETE WATERPROOFING SYSTEM.

07 13 54.1 - MEMBRANE WP OVERLAP WITH VR AND AB WORK OF 07 13 54.0 SHEET MEMBRANE WATERPROOFING SHALL INCLUDE THE INTERCONNECTION OF WORK OF SECTION 07 26 16 - BELOW GRADE VAPOR RETARDERS AND SECTION 07 27 26 - FLUID-APPLIED MEMBRANE AIR BARRIERS BY USE OF FLASHING MATERIALS AS A CONTINUOUS AIR AND VAPOR SEAL CREATED BETWEEN SLAB AND WALL CONSTRUCTION ENVELOPE .

07 21 00 THERMAL INSULATION

07 21 00.0 - FOUNDATION INSULATION PROVIDE MINIMUM THICKNESS OF CONTINUOUS INSULATED PERIMETER WALL PANELS AS FOUNDATION INSULATION TO ACHIEVE A THERMAL RESISTANCE VALUE OF NO LESS THAN R-15. PROVIDE CONTINUOUS FOUNDATION INSULATION FROM GRADE TO 10-FEET BELOW GRADE AT BASEMENT WALLS AND TO 2-FEET BELOW GRADE AT SLAB ON GRADE AFTER CONCRETE FOUNDATION WORK HAS BEEN POURED AND ACCEPTABLE TO ENGINEER. FOUNDATION INSULATION SHALL BE FULLY ADHERED TO CONCRETE PRIOR TO BACKFILL.

07 21 00.1 - CAVITY WALL RIGID INSULATION PROVIDE MINIMUM THICKNESS OF CONTINOUS CAVITY WALL INSULATION TO ACHIEVE A THERMAL RESISTANCE VALUE OF NO LESS THAN R-12.5. WORK OF 07 26 13.0 WALL SYSTEM VAPOR AND AIR BARRIERS TO BE IN PLACE PRIOR TO INSTALLATION OF CAVITY WALL RIGID INSULATION.

07 21 00.2 - SEMI-RIGID BATT INSULATION PROVIDE MINIMUM THICKNESS OF SEMI-RIGID MINERAL WOOL BATT INSULATION AT EXTERIOR METAL STUD WALLS TO ACHIEVE A THERMAL RESISTANCE VALUE OF NO LESS THAN R-24.

07 21 00.3 - ACOUSTIC BATT INSULATION PROVIDE 3-INCH-THICK STONE FIBER BATT ACOUSTICAL INSULATION AT ALL NON-FIRE RATED AND FIRE RATED GYPSUM BOARD ACOUSTIC PARTITIONS. REFER TO NOTE 09 29 00.4 ACOUSTIC PARTITION.

07 21 00.4 - FIRE SAFING INSULATION PROVIDE COMPRESSION-FIT, NON-COMBUSTIBLE, LIGHTWEIGHT, SEMI-RIGID MINERAL WOOL BOARD INSULATION THAT PROVIDES FIRE RESISTANCE FOR JOINTS BETWEEN THE PERIMETER EDGE OF FIRE-RESISTANCE-RATED FLOOR ASSEMBLIES AND NON-FIRE-RESISTANCE-RATED EXTERIOR CURTAIN WALLS.

07 21 00.5 - CONCRETE FACED INSULATED WALL PANEL PROVIDE PRE-FINISHED CONCRETE FACED INSULATED WALL PANEL AT LOCATIONS INDICATED ON THE ARCHITECTURAL DRAWINGS TO ACHIEVE A THERMAL RESISTANCE VALUE OF NO LESS THAN R-10. CONCRETE FACED INSULATED WALL PANELS SHALL BE MECHANICALLY ATTACHED TO WALL WITH GALVANIZED STEEL MOUNTING CLIPS.

07 21 00.6 - CURTAIN WALL INSULATION PROVIDE RIGID MINERAL WOOL CURTAIN WALL INSULATION AT EXTERIOR CURTAIN WALL SYSTEMS AS INDICATED ON ARCHITECTURAL DRAWINGS IN ACCORDANCE WITH 07 21 00 – THERMAL INSULATION.

07 26 16 BELOW GRADE VAPOR RETARDERS - (THIS SECTION IS PART OF THE FILED SUB BID REQUIRED FOR WATERPROOFING, DAMPROOFING, AND CAULKING)

07 26 16.0 - BELOW GRADE VAPOR RETARDERS PROVIDE UNDERSLAB VAPOR RETARDER/BARRIER MEMBRANE THAT FORMS AN INTEGRAL BOND TO POURED CONCRETE FOR USE BELOW SLABS ON GRADE THROUGHOUT FOUNDATION WALLS, GRADE BEAMS, AND SLABS ABOVE EL 460 AT THE WATER TREATMENT PLANT AND ABOVE EL 448 AT THE DEWATERING BUILDING , EXCLUDING WATER HOLDING STRUCTURES. UNDERSLAB VAPOR RETARDER/BARRIER MEMBRANE WORK SHALL INCLUDING BUT NOT LIMITED TO CONCRETE FOUNDATION CONDITIONS SUCH AS PIPE TRENCHES, AND PENETRATIONS BELOW THE FLOOR SLAB AS A COMPLETE SYSTEM.

07 27 26 FLUID APPLIED MEMBRANE AIR BARRIERS - (THIS SECTION IS PART OF THE FILED SUB BID REQUIRED FOR WATERPROOFING, DAMPROOFING, AND CAULKING)

07 27 26.0 - WALL SYSTEM AIR BARRIERS PROVIDE VAPOR IMPERMEABLE FLUID APPLIED MEMBRANE AIR BARRIERS THROUGHOUT ALL ABOVE GRADE WALL SURFACES. SEAL WALL SYSTEM AIR BARRIERS TO ADJOINING TRANSITION MEMBRANES TO CREATE A COMPLETE AIR ENCLOSURE SYSTEM. APPLY AIR BARRIER ON INTERIOR SIDE OF CAVITY FOR ALL EXTERIOR CAVITY WALL SYSTEMS. AIR BARRIERS SHALL BE INSTALLED PRIOR TO INSTALLATION OF CAVITY WALL RIGID INSULATION.

07 42 13 METAL WALL PANELS

07 42 13.0 - FIRE RATED METAL WALL PANEL SYSTEM PROVIDE ONE HOUR FIRE RATED METAL WALL PANEL SYSTEM SUPPORTED BY REMOVABLE STRUCTURAL FRAMING IN ACCORDANCE WITH SPECIFICATION SECTION 05 12 00. REFER TO CONTRACT DRAWINGS FOR AREAS TO RECEIVE METAL PANEL SYSTEM.

07 42 13.1 - EQUIPMENT SCREENING PROVIDE HORIZONTAL CORRUGATED AND PERFORATED ALUMINUM EQUIPMENT SCREENS WITH COMPLETE SECONDARY METAL FRAMING SYSTEM AND ALL COMPONENTS REQUIRED FOR INSTALLATION. REFER TO STRUCTURAL DRAWINGS FOR SUPPORT OF EQUIPMENT SCREENS AND SECONDARY METAL FRAMING SYSTEM.

07 42 63 CEMENTITIOUS WALL PANEL SYSTEMS

07 42 63.0 - CEMENTITIOUS WALL PANEL SYSTEM PROVIDE ULTRA HIGH-PERFORMANCE CONCRETE (UHPC) PANELS WITH CONCEALED FASTENERS SUPPORTED ON EXTRUDED ALUMINUM ATTACHMENT SYSTEM MOUNTED TO A SUB GIRT SUPPORT ASSEMBLY WITH CONTINUOUS EXTERIOR INSULATION OVER AIR AND VAPOR BARRIER. REFER TO NOTES 07 26 13.0 WALL SYSTEM AIR AND VAPOR BARRIERS, 07 21 00.1 CAVITY WALL RIGID INSULATION, 07 42 63.1 PANEL SYSTEM ATTACHMENT, 07 42 63.2 CEMENTITIOUS FIELD PANELS, 07 42 63.3 CEMENTITIOUS CORNER PANELS FOR COMPONENTS OF CEMENTITIOUS WALL PANEL SYSTEM.

07 42 63.1 - PANEL SYSTEM ATTACHMENT PROVIDE CONCEALED ATTACHMENT SYSTEM CONSISTING OF INTERLOCKING STRUCTURAL RAILS AND CLIPS MADE OF 6005A-T5 EXTRUDED ALUMINUM OR EQUAL, SUPPORTING WORK OF 07 42 63.0 CEMENTITIOUS WALL PANEL SYSTEM. SUPPORT CLIPS ARE 1.1811 INCHES DEEP, 2 INCHES WIDE, 2.5 INCHES HIGH, AND 0.118 INCHES THICK. THE CLIPS ARE SECURED TO CEMENTITIOUS PANEL USING TYPE 316 STAINLESS STEEL UNDERCUT ANCHORS. THE SUB-GIRT FRAMING THAT SUPPORTS THE PANEL CLIP AND RAIL SYSTEM MUST BE ATTACHED TO THE STRUCTURE WITH THERMALLY-ISOLATED BRACKETS.

07 42 63.2 - CEMENTITIOUS FIELD PANELS PROVIDE UHPC SMOOTH TEXTURED FIELD PANELS MANUFACTURED FROM PORTLAND CEMENT, MICRO AGGREGATES, AND ADDITIVES, WITH ALKALI RESISTANT GLASS FIBERS AND TWO LAYERS OF ALKALI-RESISTANT GLASS FIBER REINFORCEMENT MESH IN SIZES AND TYPES AS INDICATED ON THE ARCHITECTURAL DRAWINGS.

REV	ISSUED FOR	DATE	BY
1	ADDENDUM NO. 5	APRIL 24	MWM
0	ISSUED FOR BIDS	FEB 24	MWM

PROJECT ENGINEER:	K. BARRETT
DESIGNED BY:	J. WOJCIESKI
DRAWN BY:	M. TAWADROUS
CHECKED BY:	W. RUSSELL

IF THIS BAR DOES NOT MEASURE 1" THEN DRAWING IS NOT TO FULL SCALE (0 1/2" 1")

REGISTERED ARCHITECT ANTHONY ... No. 30719 NEW YORK STATE / COMMONWEALTH OF MASSACHUSETTS

Hazen

HAZEN AND SAWYER
100 GREAT MEADOW ROAD, SUITE 702
WETHERSFIELD, CT 06109

SPRINGFIELD WATER AND SEWER COMMISSION

WEST PARISH WATER TREATMENT PLANT

FILED SUB-BID

ARCHITECTURAL
ARCHITECTURAL NOTES - SHEET 1

DATE:	FEBRUARY 2024
HAZEN NO.:	90398-004
CONTRACT NO.:	24-51
DRAWING NUMBER:	A-002

Autodesk Docs://90398-004_West Parish Filter WTF/90398-004-Arch Schedules.rvt
4/18/2024 2:16:57 PM

07 42 63.3 - CEMENTITIOUS CORNER PANELS — PROVIDE QUIRK MITER PANEL JOINTS AT ALL OUTSIDE CORNER CONDITIONS IN CEMENTITIOUS WALL PANEL SYSTEM.

07 42 63.4 - CEMENTITIOUS TEXTURED BAND — PROVIDE UHPC TEXTURED BAND PANELS IN LOCATIONS AS INDICATED ON THE ARCHITECTURAL DRAWINGS.

07 42 63.5 - CEMENTITIOUS CAST RETURN — PROVIDE CAST RETURN IN CEMENTITIOUS WALL PANEL SYSTEM IN LOCATIONS AS INDICATED ON THE ARCHITECTURAL DRAWINGS.

07 42 63.6 - PERFORATED METAL CLOSURE — PROVIDE PERFORATED METAL CLOSURE WHERE CEMENTITIOUS PANEL SYSTEM TERMINATES AT ALL HEAD AND BASE OF WALL CONDITIONS AS WORK OF 07 42 63 CEMENTITIOUS WALL PANEL SYSTEMS. PERFORATED METAL CLOSURE TO MATCH FINISH OF ADJACENT WINDOW OR DOOR FRAME AS SELECTED BY ARCHITECT.

07 42 63.7 - SOLID METAL CLOSURE — PROVIDE SOLID METAL CLOSURE WHERE CEMENTITIOUS PANEL SYSTEM TERMINATES AT ALL OPENINGS AS WORK OF 07 42 63 CEMENTITIOUS WALL PANEL SYSTEMS. SOLID METAL CLOSURE TO MATCH FINISH OF ADJACENT WINDOW OR DOOR FRAME AS SELECTED BY ARCHITECT.

07 52 00.0 BUILT-UP ROOFING - (THIS SECTION IS PART OF THE FILED SUB BID REQUIRED FOR ROOFING AND FLASHING)

07 52 00.0 - BUILT-UP ROOFING SYSTEM — PROVIDE FOUR PLY HOT ASPHALT APPLIED MODIFIED BITUMEN MEMBRANE ROOFING SYSTEM WITH MINERAL GRANULE SURFACE CAP SHEET THROUGHOUT ALL ROOF AREAS AS INDICATED ON THE ARCHITECTURAL DRAWINGS.PROVIDE ROOFING SYSTEM OVER 5/8-INCH PROTECTION BOARD, OVER TAPERED POLYISOCYANURATE INSULATION PITCHED AT 1/4-INCH PER FOOT OVER CONTINUOUS UNTAPERED POLYISOCYANURATE INSULATION OVER VAPOR RETARDER TO ACHIEVE R-30 CONTINUOUS INSULATION SYSTEM. PROVIDE SST COUNTER FLASHING AT ALL VERTICAL PENETRATIONS. VERIFY ALL FIELD CONDITIONS PRIOR TO START OF WORK.

07 52 00.1 - CRICKET — PROVIDE CRICKETS AT ALL ROOF PADS AND ROOF CURBS. CRICKET SLOPE SHALL BE 1/2-INCH PER FOOT.

07 52 00.2 - DRAINAGE CRICKET — PROVIDE 1/2-INCH PER FOOT CRICKET SLOPE TO ROOF DRAINS. HIGH POINT OF DRAINAGE SLOPE SHALL BE 2-INCHES ABOVE LOW POINT OF ROOF.

07 52 00.3 - COVER BOARD (2) — PROVIDE 5/8-INCH THICK GYPSUM-FIBER ROOF BOARD ADHERED TO TAPERED ROOF INSULATION. ROOF COVER BOARD IS TO BE INSTALLED VERTICALLY OVER WALL INSULATION AT ALL WALLS ADJACENT TO FLAT AND SLOPED ROOFS. ROOF COVER BOARD SHALL CONTINUE VERTICALLY AT PARAPET WALLS AND OVER TOP OF PARAPET WALLS UNDERNEATH COPING.

07 52 00.4 - ROOF WALKWAY PADS — PROVIDE ROOF WALKWAY PADS TO LEAD FROM ACCESS OPENING, LADDER OR STAIR TO EACH PIECE OF ROOFTOP EQUIPMENT WHETHER OR NOT SHOWN ON ARCHITECTURAL DRAWINGS AND AS PER 07 52 00.

(3) 07 52 00.5 - REINFORCED VAPOR RETARDER — PROVIDE POLYETHYLENE-REINFORCED SELF-SEALING VAPOR RETARDER OVER PRIMED CONCRETE ROOF DECK AND AT TOP AND BACK SIDE OF PARAPET IN ACCORDANCE WITH 07 52 00.

07 52 00.6 - ROOFING BOARD INSULATION (2) — PROVIDE MINIMUM THICKNESS OF CONTINUOUS UNTAPERED ROOF INSULATION THROUGHOUT ROOF AREA WITH 1/4-INCH PER FOOT TAPERED INSULATION LAID ONTO TOP OF UNTAPERED INSULATION TO ACHIEVE A THERMAL RESISTANCE VALUE OF NO LESS THAN R-30. PROVIDE 1/2-INCH BACK SLOPE AT WALLS TO CREATE POSITIVE DRAINAGE TO THE ROOF DRAINS AND SCUPPERS. PROVIDE MINIMUM THICKNESS OF CONTINUOUS INSULATION OF R-12.5 AT TOP AND BACK SIDE OF PARAPET. INSTALL IN ACCORDANCE WITH MANUFACTURERS REQUIREMENTS OVER VAPOR RETARDER ONTO STRUCTURAL ROOF SYSTEM

07 52 00.7 - ROOF SYSTEM EXPANSION JOINT — PROVIDE ROOF SYSTEM EXPANSION JOINT BETWEEN BUILDING FOR FULL EXTENT OF ROOFING SYSTEM INCLUDING BUT NOT LIMITED TO ROOF MEMBRANE SURFACE HORIZONTAL AND VERTICAL CONDITIONS UP TO AND INCLUDING THE FASCIA CONDITION. SEAL TRANSITION TO WALL CONDITION AT EXPANSION JOINT.

07 52 00.8 - ROOF RAILING AND LADDER POSTS PENETRATIONS — COORDINATE VERTICAL PENETRATION OF ROOF TOP RAILINGS AND LADDERS WITH THE REQUIREMENTS OF SECTION 07 52 00 BUILT-UP ROOFING SYSTEM. REFER TO NOTE 05 52 00.1 - ALUMINUM RAILING SYSTEM AND 05 51 33.1 - ALUMINUM LADDERS.

07 52 00.9 - ROOF CURBS — COORDINATE INSTALLATION OF SECTION 07 52 00 – BUILT-UP BITUMINOUS ROOFING WITH ALL ROOF EQUIPMENT CURBS PROVIDED AS WORK OF DIVISION 23.

07 60 00 SHEET METAL FLASHING AND TRIM - (THIS SECTION IS PART OF THE FILED SUB BID REQUIRED FOR ROOFING AND FLASHING)

07 60 00.0 - SHEET METAL FLASHING (1) — PROVIDE SHEET METAL FLASHING AS SPECIFIED IN SECTION 07 60 00 –FLASHING AND SHEET METAL, AS REQUIRED THROUGHOUT BUILDING ASSEMBLIES AND PENETRATIONS. FLASHING SHALL EXTEND A MINIMUM OF 8" VERTICAL RETURN AT REAR OF ASSEMBLY. REFER TO SECTIONS 04 22 23.23_PREFACED CONCRETE UNIT MASONRY, 04 43 00_STONE MASONRY, 07 42 63 – CEMENTITIOUS WALL PANELS, 08 45 23 - TRANSLUCENT WALL ASSEMBLIES FOR FLASHING REQUIREMENTS AT WALL ASSEMBLIES. REFER TO NOTE 07 60 00.2 FOR WINDOW AND LOUVER CONDITIONS. PROVIDE SEPARATION FOR ALL DISSIMILAR METAL.

07 60 00.1 - CORNER FLASHING — PROVIDE MITERED WELDED CORNERS AT ALL INTERIOR AND EXTERIOR CORNERS ALONG THE EXTERIOR WALL SYSTEM IN ACCORDANCE WITH SECTION 07 60 00 –FLASHING AND SHEET METAL.

07 60 00.2 - SILL FLASHING (1) — AT ALL OPENINGSSILL CONDITIONS, PROVIDE FLASHING AS SPECIFIED IN SECTION 07 60 00 – FLASHING AND SHEET METAL. TURN UP FLASHING AT SIDE OF SILL TO ALIGN WITH UNDERSIDE OF WINDOW AND LOUVER FRAMES TO CREATE END DAM CONDITION. REFER TO SECTIONS 08 41 13 - ALUMINUM-FRAMED ENTRANCES AND STOREFRONT, 08 44 13 - GLAZED ALUMINUM CURTAIN WALL SYSTEM, 08 91 20 - FIXED LOUVERS FOR SILL FLASHING REQUIREMENTS. PROVIDE SEPARATION FOR ALL DISSIMILAR METAL. SILL FLASHING TO MATCH FINISH OF ADJACENT WINDOW, DOOR, LOUVER OR TRANSLUCENT PANEL FRAME AS SELECTED BY ARCHITECT.

07 70 00 ROOF SPECIALTIES - (THIS SECTION IS PART OF THE FILED SUB BID REQUIRED FOR ROOFING AND FLASHING)

07 70 00.0 - PARAPET COPING UNITS — PROVIDE ALUMINUM COPING UNITS WITH MITERED WELDED CORNERS, SPLICE PLATES AND JOINT TRIM, RETAINER CLIPS, COMPRESSION PADS, FASTENERS, AND OTHER ACCESSORIES REQUIRED TO MAKE A COMPLETE INSTALLATION, IN ACCORDANCE WITH THE MANUFACTURER'S RECOMMENDATIONS.

07 70 00.1 - PROFILED FASCIA — PROVIDE ALUMINUM PROFILED FASCIA WITH CANT DAM, MITERED WELDED CORNERS, SPLICE PLATES AND JOINT TRIM, RETAINER CLIPS, COMPRESSION PADS, FASTENERS, AND OTHER ACCESSORIES REQUIRED TO MAKE A COMPLETE INSTALLATION, IN ACCORDANCE WITH THE MANUFACTURER'S RECOMMENDATIONS. PROVIDE FASCIA EXTENSION AS INDICATED ON THE ARCHITECTURAL DRAWINGS. PROVIDE PROFILE FASCIA STOP END AT TRANSITION TO WORK OF NOTE 07 70 00.2 GRAVEL STOP FASCIA.

07 70 00.2 - GRAVEL STOP FASCIA — PROVIDE GRAVEL STOP FASCIA UNITS WITH MITERED WELDED CORNERS, CONCEALED SPLICE PLATES AND JOINT TRIM, RETAINER CLIPS, COMPRESSION PADS, FASTENERS, AND OTHER ACCESSORIES REQUIRED TO MAKE A COMPLETE INSTALLATION, IN ACCORDANCE WITH THE MANUFACTURER'S RECOMMENDATIONS. PROVIDE FASCIA EXTENSION AS INDICATED ON THE ARCHITECTURAL DRAWINGS. PRIOR TO THE INSTALLATION OF THE FASCIA, ALLOW FOR AND COORDINATE THE INSTALLATION OF VAPOR BARRIER AND TRANSITION MEMBRANE AS WORK OF SECTION 07 27 26.

07 70 00.3 - DOWNSPOUTS — PROVIDE 6-INCH SQUARE ALUMINUM DOWNSPOUTS, INCLUDING ALL ACCESSORIES FOR A COMPLETE ASSEMBLY IN ACCORDANCE WITH SECTION 07 70 00 – ROOF SPECIALTIES AND ACCESSORIES. DOWNSPOUTS AT WEST FAÇADE OF THE WATER TREATMENT BUILDING SHALL BE 6-INCH BY 8-INCH. DOWNSPOUTS THAT ARE CONNECTED TO WORK OF NOTE 07 70 00.5 OVERFLOW SCUPPERS SHALL TERMINATE A MINIMUM OF 18" ABOVE ADJACENT GRADE. PROVIDE DOWNSPOUT BOOT IN ACCORDANCE WITH SECTION 07 70 00 ROOF SPECIALTIES WHERE DOWNSPOUT CONNECTS TO UNDERGROUND STORMWATER PIPING. REFER TO CIVIL DRAWINGS FOR DOWNSPOUT BOOT TIE-IN LOCATIONS. REFER TO ARCHITECURAL DRAWINGS FOR DETAIL OF DOWNSPOUTS CONNECTED TO WORK OF NOTE 07 70 00.6 SCUPPER COLLECTOR BOX.

07 70 00.4 - ROOF SCUPPER — PROVIDE ALUMINUM ROOF SCUPPER FULLY WELDED WITH FLANGE AND INTEGRATED LIP IN ACCORDANCE WITH 07 60 00 – SHEET METAL FLASHING. PROVIDE SCUPPER COLLECTOR BOX AND DOWNSPOUT IN ACCORDANCE WITH SECTION 07 70 00 – ROOF SPECIALTIES AND ACCESSORIES.

07 70 00.5 - OVERFLOW SCUPPER — PROVIDE ALUMINUM OVERFLOW SCUPPER FULLY WELDED WITH FLANGE AND INTEGRATED LIP IN ACCORDANCE WITH 07 60 00 – SHEET METAL FLASHING. PROVIDE SCUPPER COLLECTOR BOX AND DOWNSPOUT IN ACCORDANCE WITH SECTION 07 70 00 – ROOF SPECIALTIES AND ACCESSORIES.

07 70 00.6 - SCUPPER COLLECTOR BOX — PROVIDE RAISED ALUMINUM SCUPPER COLLECTOR BOX FULLY WELDED WITH FLANGE AND INTEGRATED LIP IN ACCORDANCE WITH SECTION 07 70 00 – ROOF SPECIALTIES AND ACCESSORIES. SCUPPER COLLECTOR BOX TO BE PROVIDED AT ROOF SCUPPERS AND OVERFLOW SCUPPERS. PROVIDE DOWNSPOUT PER NOTE 07 70 00.3 AT ALL SCUPPER COLLECTOR BOX LOCATIONS . SCUPPER COLLECTOR BOXES AT WEST FAÇADE OF THE WATER TREATMENT BUILDING SHALL BE SIZED TO ACCOMMODATE WORK OF NOTE 22 14 13.0 DOWNSPOUT NOZZLE. REFER TO ARCHITECTURAL DRAWINGS FOR SCUPPER COLLECTOR BOX SIZES.

07 70 00.7 - SPLASH BLOCK — PROVIDE SPLASH BLOCK WHERE LEADERS TERMINATE AT GRADE AND AT FLAT ROOF. REFER TO SECTION 07 70 00 – ROOF SPECIALTIES AND ACCESSORIES.

07 70 00.8 - METAL ROOF NAILER — PROVIDE PREMANUFACTURED METAL ROOF NAILER ALTERNATIVE TO WOOD BLOCKING COMPLYING WITH TESTING REQUIREMENTS OF SECTION 07 70 00 – ROOF SPECIALTIES AND ACCESSORIES.

07 84 00 FIRESTOPPING

07 84 00.0 - FIRESTOPPING — INSTALL SAFING INSULATION AND FIRE STOP SYSTEMS TO PROVIDE A CONTINUOUS FIRE RATED FIRE BARRIER IN AREAS SHOWN AND AT THE PERIMETER OF ALL FIRE-RATED PARTITIONS, SLABS, INTERSECTION OF FIRE RATED ASSEMBLIES, JOINTS AND POKE THROUGH FLOOR AND WALL PENETRATIONS TO MAINTAIN THE CONTINUITY OF FIRE-RATED CONSTRUCTION WHETHER OR NOT SHOWN.

07 84 00.1 - FIRESTOPPING AT MASONRY WALLS — WHERE UNIT MASONRY WALLS OR PARTITIONS ARE DESIGNATED AS FIRE RATED PROVIDE UL ASSEMBLY CONSISTING OF FIRE RATED SEALANT ASSEMBLY AT BOTH SIDES OF PARTITION BOTH HORIZONTAL AND VERTICAL. FILL ALL VOIDS WITH FIRE SAFING INSULATION. FOR NON-FIRE RATED UNIT MASONRY WALL OR PARTITIONS PROVIDE COMPRESSIBLE FILLER WITHIN VOIDS WITH BOND BREAKER AND SEALANT AT BOTH SIDES OF PARTITION AND ALSO BOTH VERTICAL AND HORIZONTAL AS THE PARTITION MEETS THE BUILDING STRUCTURE OR ADJOINING PARTITIONS. PROVIDE THE SAME ASSEMBLY FOR CONTROL JOINTS IN PARTITIONS.

07 90 00 JOINT FILLERS, SEALANTS AND CAULKING

07 90 00.0 - BACKER SEAL — PROVIDE BACKER SEAL AT EXTERIOR FACE GFB IN VERTICAL JOINTS AND HORIZONTAL JOINT BELOW STEEL IN MASONRY DESIGNATED WITH A CONTROL JOINT. RECESS BACKER SEAL TO RECEIVE SEALANT.

07 90 00.1 - ENTRY PANELS — PROVIDE ENTRY PANELS WITH UV RESISTANT WATERPROOFING SYSTEMS AT ALL PENETRATIONS IN INTERIOR AND EXTERIOR WALLS ON BOTH SIDES. FOR FIRE RATED ASSEMBLIES, PROVIDE COMPLETE FIRE STOPPING ASSEMBLY PRIOR TO INSTALLATION OF ENTRY PANEL. PROVIDE COMPLETE ADDITIONAL SEALANT SEAL AT ROUND PENETRATIONS AND PERIMETER OF ENTRY PANELS

07 90 00.2 - EXPANDABLE JOINT SEALER — PROVIDE EXPANDABLE JOINT SEALER AT ALL EXPANSION JOINTS FOR FULL LENGTHS.

07 90 00.3 - SEALANT — PROVIDE SEALANT IN ACCORDANCE WITH SECTION 07 90 00 – JOINT FILLERS, SEALANTS AND CAULKING.

07 90 00.4 - SILL SEALER — PROVIDE SILL SEALER AT WORK OF NOTE 05 40 00.2 EXTERIOR METAL STUDS IN ACCORDANCE WITH SECTION 07 90 00 – JOINT FILLERS, SEALANTS AND CAULKING.

07 95 13 EXPANSION JOINT COVER ASSEMBLIES

07 95 13.0 - EXTERIOR EXPANSION JOINTS — PROVIDE EXPANSION JOINT BETWEEN FACADE MATERIALS. CLEAN AND PREPARE SURFACES IN ACCORDANCE WITH MANUFACTURER'S REQUIREMENTS. PROVIDE ALL TRANSITIONS FROM UNDERSIDE OF COPING AND FASCIA TO FOUNDATION WALL CONDITION FOR FULL HEIGHT .

07 95 13.1 - INTERIOR EXPANSION JOINT AT WALL AND CEILING — PROVIDE FIRE RATED EXPANSION JOINT FOR WALL AND CEILING CONDITION AT OPENING. CLEAN AND PREPARE SURFACES IN ACCORDANCE WITH MANUFACTURER'S REQUIREMENTS. PROVIDE ALL TRANSITIONS FROM FLOOR TO WALL AND CEILING FOR FULL HEIGHT OF OPENING.

07 95 13.2 - INTERIOR EXPANSION JOINT AT FLOOR — PROVIDE FIRE RATED EXPANSION JOINT WITH ALUMINUM COVER FOR ALL INTERIOR FLOOR CONDITIONS AT OPENINGS. CLEAN AND PREPARE SURFACES IN ACCORDANCE WITH MANUFACTURER'S REQUIREMENTS. PROVIDE ALL TRANSITION FROM FLOOR TO WALL FOR FULL CONDITION OF OPENING.

07 95 13.3 - EXPANSION JOINT AT ROOF — PROVIDE EXPANSION JOINT COMPRESSIBLE FILLER AT ROOF SLAB PRIOR TO THE INSTALLATION OF JOINT COVER WORK OF 07 52 00.0 BUILT-UP ROOFING SYSTEM.

07 95 13.4 - INTERIOR EXPANSION JOINT AT TANK WALL — PROVIDE CHEMICAL RESISTANT EXPANSION JOINT BETWEEN TANK WALL AND CONCRETE CURBS, COLUMNS, AND SLABS IN CHEMICAL STORAGE AREAS.

07 95 13.5 - TRAFFIC GRADE EXPANSION JOINT — PROVIDE TRAFFIC GRADE EXPANSION JOINT BETWEEN BUILDING FAÇADES AND CONCRETE SIDEWALKS, RAMPS, AND DRIVEWAYS.

DIVISION 8 DOORS AND WINDOWS

08 11 13 STEEL DOORS AND FRAMES

08 11 13.0 - STEEL DOORS AND FRAMES — PROVIDE STEEL DOORS AND FRAMES AS INDICATED ON THE ARCHITECTURAL DRAWINGS. STEEL DOORS AND FRAMES FINISHED IN ACCORDANCE WITH SECTION 09 90 00 – PAINTING. HARDWARE TO BE INSTALLED IN ACCORDANCE WITH SECTION 08 71 01- FINISH DOOR HARDWARE.

08 14 00 WOOD DOORS

08 14 00.0 - WOOD DOORS — PROVIDE FLUSH WOOD DOORS AS INDICATED ON THE ARCHITECTURAL DRAWINGS. REFER TO NOTE 08 41 13.1 INTERIOR ALUMINUM STOREFRONT FOR FLUSH WOOD DOORS TO BE INSTALLED IN ALUMINUM FRAMING SYSTEM.

08 15 00 FRP DOORS AND FRAMES

08 15 00.0 - FRP DOORS AND FRAMES — PROVIDE FRP DOORS WITH FRP FRAMES AS INDICATED ON THE ARCHITECTURAL DRAWINGS. HARDWARE TO BE INSTALLED IN ACCORDANCE WITH 08 71 00- FINISH DOOR HARDWARE.

08 31 13 ACCESS DOORS AND FRAMES

08 31 13.0 - ACCESS DOORS — PROVIDE 30-INCH WIDE BY 40-INCH HIGH 2 HOUR FIRE RATED ACCESS DOORS AT ALL SHAFTS AND CHASES. SET ACCESS DOOR 36-INCHES ABOVE FINISHED FLOOR AT EACH FLOOR LEVEL.

08 33 23 OVERHEAD COILING DOORS

08 33 23.0 - OVERHEAD COILING DOORS — PROVIDE MOTOR OPERATED OVERHEAD COILING DOORS WITH INSULATED ALUMINUM CURTAIN SLATS, BOTTOM BAR WEATHERSTRIPPING, GALVANIZED STRUCTURAL STEEL GUIDES AND GALVANIZED DOOR HOODS.

08 41 13 ALUMINUM-FRAMED ENTRANCES AND STOREFRONT - (THIS SECTION IS PART OF THE FILED SUB BID REQUIRED FOR METAL WINDOWS)

(1) 08 41 13.0 - ALUMINUM-FRAMED ENTRANCES AND STOREFRONT — PROVIDE THERMALLY BROKEN ALUMINUM ENTRANCE DOORS WITH INSULATED GLASS PER NOTE 08 81 03.0 AND AS SHOWN ON THE ARCHITECTURAL DRAWINGS. FRAMING TO RECEIVE ALUMINUM-FRAMED ENTRANCES AND STOREFRONTS TO BE WORK OF 08 44 13.0 GLAZED ALUMINUM CURTAIN WALL SYSTEM.

08 41 13.1 - INTERIOR ALUMINUM STOREFRONT — PROVIDE CENTER-GLAZED ALUMINUM-FRAMED ENTRANCES AND STOREFRONT SYSTEM WITH LAMINATED SAFETY GLASS PER NOTE 08 81 03.2. REFER TO NOTE 08 14 00.0 - WOOD DOORS FOR INTERIOR ALUMINUM STOREFRONT TO RECEIVE FLUSH WOOD DOORS.

08 44 13 GLAZED ALUMINUM CURTAIN WALLS - (THIS SECTION IS PART OF THE FILED SUB BID REQUIRED FOR METAL WINDOWS)

08 44 13.0 - GLAZED ALUMINUM CURTAIN WALL SYSTEM — PROVIDE THERMALLY BROKEN FRONT-GLAZED ALUMINUM CURTAIN WALL SYSTEM WITH INSULATED GLASS PER NOTE 08 81 03.0 AND AS SHOWN ON THE ARCHITECTURAL DRAWINGS. REFER TO NOTE 08 44 13.2 FOR INTEGRATED SUNSHADES. ALL DOORS AND ASSOCIATED FRAMING SECURED TO GLAZED ALUMINUM CURTAIN WALL SYSTEM TO BE INCLUDED AS WORK OF 08 41 13 - ALUMINUM-FRAMED ENTRANCES AND STOREFRONT DOORS AND ALL FRAMING COLOR TO MATCH GLAZED ALUMINUM CURTAIN WALL SYSTEM FRAME COLOR.

08 44 13.1 - GLAZED ALUMINUM WINDOWS — PROVIDE THERMALLY BROKEN FRONT-GLAZED ALUMINUM WINDOWS WITH INSULATED GLASS PER NOTE 08 81.03.0 AS WORK OF 08 44 13 GLAZED ALUMINUM CURTAIN WALL SYSTEM. REFER TO NOTE 08 44 13.2 FOR INTEGRATED SUNSHADES. PROVIDE OPERABLE WINDOWS WHERE INDICATED ON THE ARCHITECTURAL DRAWINGS IN ACCORDANCE WITH SECTION 08 44 13.

08 44 13.2 - INTEGRATED SUNSHADES — PROVIDE ALUMINUM SUNSHADES SECURED TO GLAZED ALUMINUM CURTAIN WALL SYSTEM AND GLAZED ALUMINUM WINDOWS. PROVIDE SUNSHADES DESIGNED TO INTEGRATE WITH GLAZED ALUMINUM CURTAIN WALL AND WINDOW SYSTEMS PROFILE WITHOUT SECONDARY SUPPORT SYSTEM. SUNSHADE COLOR TO MATCH ALUMINUM FRAME COLOR.

08 45 23 TRANSLUCENT WALL SYSTEMS

08 45 23.0 - TRANSLUCENT WALL SYSTEMS — PROVIDE TRANSLUCENT THERMALLY BROKEN AND INSULATED WALL SYSTEM COMPRISED OF STRUCTURAL COMPOSITE SANDWICH PANELS SET IN ALUMINUM FRAMES WITH CORROSION-RESISTANT FLUOROPOLYMER FINISH. PROVIDE FLASHING IN ACCORDANCE WITH ARCHITECTURAL NOTES 07 60 00.0 AND 07 60 00.2. TRANSLUCENT WALL SYSTEM SHALL BE SECURED TO ALLOW FOR SEISMIC MOVEMENT TO EXTERIOR WALL SYSTEM. REFER TO STRUCTURAL DRAWINGS FOR REMOVABLE INTERMEDIATE HORIZONTAL SUPPORTS.

08 63 00 TRANSLUCENT SKYLIGHT ASSEMBLIES

08 63 00.0 - TRANSLUCENT SKYLIGHT — PROVIDE INSULATED TRANSLUCENT SKYLIGHT PANEL SYSTEM INCLUDING ALUMINUM FRAMING, BATTENS, CLOSURES, TRIM, AND FLASHINGS IN ACCORDANCE WITH 08 63 00 – TRANSLUCENT SKYLIGHT ASSEMBLIES.

08 71 01 FINISH DOOR HARDWARE

08 71 01.0 - FINISH DOOR HARDWARE — PROVIDE FINISH DOOR HARDWARE IN ACCORDANCE WITH SECTION 08 71 01 - FINISH DOOR HARDWARE.

08 71 01.1 - SECURITY DOOR HARDWARE — PROVIDE SECURITY COMPLIANT ELECTRONIC HARDWARE. ELECTRONIC POWER TRANSFER AND ASSOCIATED ACCESSORIES WITH INTERCONNECTION TO SECURITY SYSTEM. ELECTRONIC HARDWARE LOCATED AT CONTROL AND SCADA ROOMS TO BE FAIL SECURE, ALL OTHER ELECTRONIC HARDWARE TO BY FAIL SAFE.

08 81 03 GLASS, PLASTIC AND GLAZING

08 81 03.0 - INSULATED GLAZING — PROVIDE INSULATED GLASS AT ALUMINUM CURTAIN WALL SYSTEMS, ALUMINUM WINDOWS, AND ALUMINUM ENTRANCES AND STOREFRONT SYSTEMS AS INDICATED ON THE ARCHITECTURAL DRAWINGS.

08 81 03.1 - INSULATED SPANDREL — PROVIDE INSULATED SPANDREL GLASS AT ALUMINUM CURTAIN WALL SYSTEMS AS INDICATED ON THE ARCHITECTURAL DRAWINGS.

08 81 03.2 - LAMINATED GLAZING — PROVIDE LAMINATED SAFETY GLASS AT ALL DOORS, SIDELIGHTS, TRANSOMS, AND INTERIOR ALUMINUM STOREFRONT INCLUDING FIRE RATED ASSEMBLIES. LAMINATED GLAZING AT INTERIOR ALUMINUM STOREFRONT TO RECEIVE TRANSLUCENT INTERLAYER WHERE INDICATED ON THE ARCHITECTURAL DRAWINGS.

08 81 03.3 - FIRE RATED GLAZING — PROVIDE FIRE RATED GLAZING IN FIRE RATED ASSEMBLIES FOR WORK OF 08 15 00 – FRP DOORS AND FRAMES.

08 91 20 FIXED LOUVERS

08 91 20.0 - FIXED UNIT LOUVERS — PROVIDE FIXED UNIT LOUVERS IN SIZES AS INDICATED BY LOUVER SCHEDULE.

08 91 20.1 - FIXED LOUVER SIZES — THE LOUVER SCHEDULE INDICATES DIMENSIONAL SIZE OF LOUVERS FOR OPENING IN WALL SYSTEMS. REFER TO HVAC LOUVER OPENINGS FOR THE SIZE OF THE OPENING REQUIRED FOR VENTILATION. BLANK OFF PANELS SHALL PROVIDE CLOSURE OF THE AREA REMAINING BETWEEN THE LOUVER SIZE AND THE SIZE OF OPENING FOR VENTILATION REQUIREMENTS SHOWN ON DRAWINGS.

08 91 20.2 - LOUVER SUPPORT — LOUVERS, DAMPERS, AND TRIM SECTIONS SHALL BE SUPPORTED BY AND INTEGRAL TO THE STRUCTURAL PERFORMANCE REQUIREMENTS OF THE LOUVER SYSTEM INCLUDING ACCESSORY BRACKET SUPPORT OF DAMPERS (INCLUDING MOTORIZED TYPE) AND METHOD OF ATTACHMENT TO INTERMEDIATE SUPPORTS AS PART OF THE WORK OF SECTION 23 31 13. ALL INTERMEDIATE STRUCTURAL SUPPORT AND COMPONENTS (INCLUDING ANY MISCELLANEOUS SUPPORT WORK FROM FOUNDATION TO UNDERSIDE OF BEAM) REQUIRED TO PROVIDE STRUCTURAL SUPPORT FOR THE LOUVERS, DAMPERS, AND TRIMS SHALL BE PROVIDED AS WORK OF SECTION 05 14 00 WITHOUT ADDITIONAL COST TO THE OWNER.

08 91 20.3 - SEALANT AT ALL LOUVERS — PROVIDE SEALANT AROUND PERIMETER OF ALL LOUVERS. REFER TO SECTION 07 90 00 FOR JOINT SEALANTS.

DIVISION 9 FINISHES

09 29 00 GYPSUM DRYWALL SYSTEMS - (THIS SECTION IS PART OF THE FILED SUB BID REQUIRED FOR LATHING AND PLASTERING)

09 29 00.0 - GYPSUM BOARD SYSTEM — PROVIDE INTERIOR GYPSUM BOARD PANEL AS SPECIFIED OVER GALVANIZED COLD-FORMED STEEL STUDS TO RUN FROM FLOOR SLAB TO UNDERSIDE OF STRUCTURE ABOVE.

09 29 00.1 - SHEET METAL GROUNDS — PROVIDE A MINIMUM OF 12-INCH HIGH BY 20 GAUGE SHEET METAL REINFORCING BEHIND ALL TOILET ACCESSORIES WORK OF 10 28 10.

09 29 00.2 - PARTITION TYPES — REFER TO ARCHITECTURAL DRAWINGS FOR PARTITION TYPE INDICATED WITH PARTITION TAGS. IN THE EVENT THAT A PARTITION IS NOT IDENTIFIED THE CONTRACT SHALL PROVIDE A 1 HOUR FIRED RATED PARTITION WITH 5/8-INCH THICK HIGH ABUSE PAPER LESS GYPSUM BOARD PANELS BOTH SIDES OF 3 5/8-INCH METAL STUDS FOR FULL HEIGHT TO UNDERSIDE OF STRUCTURE ABOVE. REFER TO SECTIONS 05 40 00 COLD-FORMED METAL FRAMING AND 09 29 00 GYPSUM DRYWALL SYSTEMS.

09 29 00.3 - INTERIOR GYPSUM PANELS — PROVIDE HIGH ABUSE PAPERLESS GYPSUM PANELS OVER ALL INTERIOR WALL PARTITIONS WITH THE EXCEPTION AS NOTED OTHERWISE. PROVIDE MOISTURE RESISTANT PAPERLESS GYPSUM BOARD PANELS AT ALL WALLS WITHIN BATHROOMS, LOCKER ROOMS, SHOWERS AND TILED SURFACES.

09 29 00.4 - ACOUSTIC PARTITION — PROVIDE FULL HEIGHT ACOUSTIC BATT INSULATION PER NOTE 07 21 00.3 THROUGHOUT ALL PARTITIONS DESIGNATED AS "ACOUSTIC PARTITION". PROVIDE SEALANT ON BOTH SIDES OF GYPSUM PANELS AT 1/2-INCH JOINTS AT BASE AND TOP OF PARTITION. ACOUSTIC PARTITION ASSEMBLY SHALL YIELD AN STC (SOUND TRANSMISSION CLASS) OF 52. USING 5/8-INCH-THICK FULL HEIGHT PAPERLESS GYPSUM PANELS ON BOTH SIDES OF 3 5/8-INCH METAL STUD FOR FULL HEIGHT TO UNDERSIDE OF STRUCTURE ABOVE. SEAL ALL PENETRATIONS IN PARTITION ASSEMBLY IN ACCORDANCE WITH MANUFACTURES REQUIREMENTS TO MAINTAIN THE DESIGNATED STC RATING.

09 29 00.5 - SUSPENDED PARTITION — PROVIDE SUSPENDED PARTITION FROM 1-INCHES ABOVE WORK ASSOCIATED WITH NOTE 08 41 13.2 INTERIOR ALUMINUM STOREFRONT TO UNDERSIDE OF STRUCTURE ABOVE. SUSPENDED PARTITION SHALL CONSIST OF 3 5/8-INCH METAL STUDS WITH 5/8-INCH-HIGH ABUSE GYPSUM BOARD PANEL SHEATHING AND INSULATION IN ACCORDANCE WITH NOTE 09 29 00.4. SUSPENDED PARTITION SHALL BE DIAGONALLY BRACED TO UNDERSIDE OF STRUCTURE ABOVE WITH 3 5/8-INCH METAL STUDS AT 48-INCHES ON CENTER.

09 29 00.6 - GYPSUM SOFFIT — PROVIDE GYPSUM SOFFIT TO UNDERSIDE OF STRUCTURE ABOVE. GYSPUM SOFFIT SHALL CONSIST OF 3 5/8-INCH METAL STUDS WITH 5/8-INCH-HIGH ABUSE GYPSUM BOARD PANEL SHEATHING. GYPSUM SOFFITS TO BE DIAGONALLY BRACED TO UNDERSIDE OF STRUCTURE ABOVE WITH 3 5/8-INCH METAL STUDS AT 48-INCHES ON CENTER.

09 29 00.7 - GYPSUM BOARD CEILING — PROVIDE WATER RESISTANT GYPSUM BOARD PANEL AS SPECIFIED OVER GALV COLD FORMED STEEL FRAMING TO RUN BETWEEN MASONRY WALLS. PROVIDE WATER RESISTANT GYPSUM BOARD SOFFIT OVER GALV COLD FORMED STEEL FRAMING TO RUN FROM CEILING TO UNDERSIDE OF STRUCTURE ABOVE.

09 29 00.8 - PARTITION GAP CLOSURE — PROVIDE SPRING LOADED EXTRUDED ALUMINUM PARTITION GAP CLOSURE FOR ALL VERTICAL JUNCTURES OF PARTITIONS AND WINDOW WALLS. INSULATED ASSEMBLY SHALL ACHIEVE AN STC 56 RATING. PROVIDE EXTUDED ALUMINUM END CAP AT GYPSUM BOARD SYSTEM. LENGTHS AND SIZE TO FIT SPECIFIED OPENINGS. FINISH TO MATCH WORK OF 08 44 13.0 GLAZED ALUMINUM CURTAIN WALL SYSTEM.

09 29 00.9 - EXTERIOR GYPSUM SYSTEM (3) — PROVIDE 5/8-INCH EXTERIOR GRADE GYPSUM BOARD SHEATING AT EXTERIOR FACE OF GALVANIZED COLD FORMED STEEL STUDS AND FURRING AS INDICATED ON THE DRAWINGS AND IN ACCORDANCE WITH NOTES 05 40 00.2 – EXTERIOR METAL STUDS AND 05 40 00.4 - EXTERIOR FURRING. REFER TO SECTIONS 09 29 00 GYPSUM DRYWALL SYSTEM AND 05 40 00 COLD-FORMED METAL FRAMING. REFER TO NOTE 09 29 00.3 FOR INTERIOR FACE OF EXTERIOR METAL STUD WALLS. REFER TO SECTION 07 27 26 - FLUID-APPLIED MEMBRANE AIR BARRIERS FOR ALL WORK ASSOCIATED WITH EXTERIOR GYPSUM SYSTEMS.

09 29 00.10 - GYPSUM BOARD REVEAL — PROVIDE "F" STYLE GYPSUM BOARD REVEAL AT LOCATIONS WHERE WORK OF NOTE 09 29 00.3 INTERIOR GYPSUM PANELS AND 03 35 00.1 EXPOSED CONCRETE FINISH INTERSECT.

09 29 00.11 - CORNER BEAD — PROVIDE CORNER BEAD AT ALL OUTSIDE CORNERS OF INTERIOR GYPSUM PANELS.

09 29 00.12 - HEAVY DUTY CORNER TRIM — PROVIDE HEAVY DUTY ALUMINUM CORNER TRIM AT OUTSIDE CORNER OF INTERIOR GYPSUM PANELS AT WORK OF 06 41 00.6 COPPER DOOR ASSEMBLY. HEAVY DUTY ALUMINUM CORNER TRIM TO HAVE MINIMUM 1 1/4-INCH EXPOSED CORNER EDGES.

09 29 00.13 - FINISHES AT SUSPENDED CEILING — ALL WALL FINISHES ADJACENT TO SUSPENDED CEILING TO EXTEND TO FULL HEIGHT.

09 30 00 TILING - (THIS SECTION IS PART OF THE FILED SUB BID REQUIRED FOR TILE)

09 29 00.14 - CEMENTITIOUS BACKER BOARD — PROVIDE 5/8-INCH CEMENTITIOUS BACKER BOARD AT WALLS TO RECEIVE WORK OF 09 30 00.0 – INTERIOR PORCELAIN WALL TILE AND 04 43 13.4 - ADHERED STONE MASONRY.

09 30 00.0 - INTERIOR PORCELAIN WALL TILE — WALL TILE SHALL BE 12-INCH by 24-INCH AND 1-INCH BY 6-INCH PORCELAIN TILE IN PATTERNS AS INDICATED ON THE ARCHITECTURAL DRAWINGS WITH 3/16-INCH JOINTS. METAL EDGE TRIM SHALL BE PROVIDED TO FINISH WALLS WHERE INDICATED AND AT ALL CORNER CONDITIONS.

09 30 00.1 - INTERIOR PORCELAIN FLOOR TILE — FLOOR TILE SHALL BE 12" x 24" IN PATTERNS AS INDICATED ON THE ARCHITECTURAL DRAWINGS WITH 3/16-INCH JOINTS. COVE BASE TO MATCH THE FLOOR TILE SHALL BE PROVIDED TO FINISH THE FLOOR WHERE REQUIRED AT ALL BASES AND FINISHED OPENING LOCATIONS. PROVIDE METAL CAP EDGE AT WAINSCOT CONDITIONS AND COVE BASE LOCATIONS WITHOUT WALL TILE.

09 30 00.2 - EXTERIOR PORCELAIN TILE — EXTERIOR FLOOR TILE SHALL BE 12" X 24" INCHES IN CONFIGURATION AS INDICATED ON THE ARCHITECTURAL DRAWINGS WITH 3/16-INCH JOINTS. PROVIDE WATERPROOF MEMBRANE ON 1-1/2-INCH THICK MORTAR BED IN ACCORDANCE WITH SECTION 09 30 00. PROVIDE MOVEMENT JOINTS ALIGNED WITH SLAB CONSTRUCTION JOINTS COORDINATED WITH STRUCTURAL DRAWINGS.

09 30 00.3 - METAL EDGE PROTECTION — PROVIDE PROFILED METAL EDGE PROTECTION AT PORCELAIN TILE EDGES INCLUDING BUT NOT LIMITED TO FLOORING TRANSITIONS, TILED END CAPS, TILED CORNERS, TILED WALL CAPS AND WHERE INDICATED ON THE ARCHITECTURAL DRAWINGS IN ACCORDANCE WITH SECTION 09 30 00.

09 51 01 SUSPENDED ACOUSTICAL CEILINGS - (THIS SECTION IS PART OF THE FILED SUB BID REQUIRED FOR ACOUSTICAL TILE)

09 51 01.0 - ACOUSTICAL PANEL CEILING — PROVIDE 24-INCH SQUARE ACOUSTICAL PANEL CEILING IN 9/16-INCH CEILING GRID WITH REVEAL. PROVIDE ALL NECESSARY ACCESSORIES TO MOUNT ALL CEILING LOCATED FIXTURES WITHIN THE CEILING ASSEMBLY.

09 51 01.1 - ACOUSTICAL CEILING TRANSITION — PROVIDE TRANSITION TRIM WITH END CAPS AT CEILING ELEVATION CHANGE, RECESSED LINEAR LIGHTING, AND WINDOW POCKETS WHERE INDICATED ON THE DRAWINGS. PROVIDE ALL NECESSARY ACCESSORIES TO SECURE AND SUPPORT TRANSITION TRIM IN ACCORDANCE WITH SECTION 09 51 01.

09 51 01.2 - LINEAR ACOUSTICAL CEILING — PROVIDE LINEAR ACOUSTICAL HOOK-ON PANELS SPACED 12" O.C. WITH ALUMINUM SUSPENSION BAR AND AIRCRAFT CABLE SUSPENSION SYSTEM. REFER TO SECTION 09 51 01 – SUSPENDED ACOUSTICAL CEILINGS.

09 51 01.3 - CLEANROOM PANEL CEILING — PROVIDE 24-INCH SQUARE CERAMIC PANEL CEILING IN 15/16-INCH CEILING GRID. PROVIDE ALL NECESSARY ACCESSORIES TO MOUNT ALL CEILING LOCATED FIXTURES WITHIN THE CEILING ASSEMBLY. CLEANROOM PANEL CEILING TO BE PROVIDED AT LABORATORY IN ADMINISTRATIVE AREA, CHEMICAL ASSAY ROOM IN TREATMENT AREA, AND SAMPLE ROOM IN DEWATERING BUILDING.

09 51 01.4 - SUSPENDED CEILING SOFFIT — PROVIDE WORK OF NOTE 09 29 00.3 – INTERIOR GYPSUM PANELS ON SUSPENDED DRYWALL SUPPORT WORK OF SECTION 09 51 01 SUSPENDED ACOUSTICAL CEILINGS. PROVIDE TRANSITION TRIM BETWEEN GYPSUM PANEL AND ACOUSTICAL PANEL CEILING.

09 65 00 RESILIENT FLOORING - (THIS SECTION IS PART OF THE FILED SUB BID REQUIRED FOR RESILIENT FLOORING)

09 65 00.0 - RESILIENT FLOORING — PROVIDE RESILIENT FLOORING IN LOCATIONS SHOWN IN THE FINISH SCHEDULE AND IN ACCORDANCE WITH SECTION 09 65 00.

09 65 00.1 - RESILIENT BASE — PROVIDE PROFILED RESILIENT WALL BASE AT LOCATIONS INDICATED IN THE FINISH SCHEDULE AND IN ACCORDANCE WITH SECTION 09 65 00.

09 65 00.2 - RESILIENT FLOOR EDGING — PROVIDE THERMOPLASTIC RUBBER EDGE, REDUCER, OR TRANSITION IN ACCORDANCE WITH SECTION 09 65 00 – RESILIENT FLOORING.

09 68 13 CARPET

09 68 13.0 - CARPET TILE — PROVIDE 24" SQUARE CARPET TILES WITH EXTRUDED ALUMINUM EDGE ACCESSORIES IN AREAS INDICATED ON THE DRAWINGS AND IN ACCORDANCE WITH SECTION 09 68 13.

09 74 50 RESINOUS FLOORING

09 74 50.0 - RESINOUS FLOORING — PROVIDE RESINOUS FLOORING IN LOCATIONS SHOWN IN THE FINISH SCHEDULE AND IN ACCORDANCE WITH SECTION 09 74 50.

09 90 00 PAINTING - (THIS SECTION IS PART OF THE FILED SUB BID REQUIRED FOR PAINTING)

09 90 00.0 - ROOF TOP EQUIPMENT — PAINT ALL EXPOSED ROOF TOP EQUIPMENT IN ACCORDANCE WITH SECTION 09 90 00 - PAINTING.

09 90 00.1 - EXTERIOR PAINTING — PAINT ALL EXTERIOR STEEL INCLUDING BUT NOT LIMITED TO BUILDING STEEL INCLUDING ALL ASSOCIATED HANGERS AND SUPPORTS. PREPARE ALL GALVANIZED MATERIALS FOR PAINT FINISH. PAINT EXPOSED WORK OF 07 21 00.5 – CONCRETE FACED INSULATED WALL PANEL.

09 90 00.2 - PAINTING — PROVIDE PAINT FINISH THROUGHOUT ALL EXPOSED INTERIOR FERROUS METALS, EXPOSED DUCTWORK AND GYPSUM BOARD WALLS AND CEILINGS. REFER TO SECTION 09 90 00 FOR PAINTING SCHEDULE FOR ALL OTHER AREAS.

09 90 00.3 - ADJACENT ROOM FINISHES (3) — IF A ROOM OR SPACE DOES NOT HAVE ROOM NUMBER OR SCHEDULED FINISH THE PAINTING SUBCONTRACTOR SHALL PROVIDE THE FINISH DESIGNATED BY THE ADJOINING ROOM OR SPACE WITH AN ASSIGNED FINISH AS DIRECTED BY THE ENGINEER.

09 97 00 SPECIAL COATINGS

09 97 00.0 - CR-CT INTERIOR — PROVIDE CHEMICAL-RESISTANT COATINGS IN ACCORDANCE WITH 09 97 00 CHEMICAL-RESISTANT COATINGS THROUGHOUT BUILDING. HORIZONTAL AND VERTICAL SURFACES SHALL HAVE A VAPOR BARRIER INTEGRAL TO THE CONCRETE TOPPING IN CONTAINMENT AREAS. VERTICAL SURFACES SHALL BE PROTECTED TO THE UNDERSIDE OF GRATING AND OR FULL HEIGHT OF CONCRETE CONTAINMENT WALL OR 8-INCH HIGH IN AREAS WHERE CONTAINMENT AREA IS NOT INDICATED AS SUCH. CHEMICAL-RESISTANT COATINGS SHALL RETURN INTO A CONTINUOUS 1/8-INCH SLOT IN AREAS OF CONTAINMENT.

09 97 00.1 - CR-CT EXTERIOR — PROVIDE CHEMICAL-RESISTANT COATINGS IN ACCORDANCE WITH DETAILED 09 97 00 CONCRETE TOPPING THROUGHOUT HORIZONTAL AND VERTICAL SURFACE AT CONTAINMENT AREAS AND CHEMICAL FILL STATIONS. CR-CT EXTERIOR SHALL REQUIRE A VAPOR BARRIER. A UV PROTECTANT FINAL COATING SHALL BE APPLIED TO THE CONCRETE TOPPING AS SPECIFIED.

09 97 00.2 - ANCHORS IN CONCRETE TOPPING — PRIOR TO THE INSTALLATION OF GRATING SUPPORT LEGS AS WORK OF 06 51 00 AND WORK OF DIVISION 15, ALL ANCHORS SHALL BE SEALED TO CONCRETE TOPPING AS WORK OF 09 61 14 CONCRETE FLOOR TOPPINGS.

09 97 00.3 - CR-CT 1/8-INCH SQUARE REVEAL — REFER TO NOTE 09 97 00.1 FOR CHEMICAL RESISTANT CONCRETE TOPPING FOR EXTERIOR CONCRETE CONTAINMENT AREA. SUBSTRATE PREPARATION SHALL BE WORK OF DETAILED 09 97 00. PROVIDE CONTINUOUS 1/8-INCH SQUARE REVEAL AT ALL TERMINATIONS OF CONCRETE TOPPINGS AS WORK OF 09 97 00.

DIVISION 10 SPECIALTIES

10 14 01 IDENTIFYING DEVICES

10 14 01.0 - IDENTIFYING DEVICES — PROVIDE IDENTIFYING SIGNS FOR ALL DOORS, ROOMS, WARNING SIGNS, SAFETY SIGNS, BUILDING SIGN AND SITE SIGNAGE AS INDICATED ON ARCHITECTURAL DRAWINGS AND SECTION 10 14 01 - IDENTIFYING DEVICES.

10 14 01.1 - EXTERIOR PLAQUE — PROVIDE PROJECTED STUD MOUNTED ENTRANCE PLAQUE SECURED TO INTERIOR WALL IN ACCORDANCE WITH SECTION 10 14 01 – IDENTIFYING DEVICES IN LOCATION INDICATED ON THE ARCHITECTURAL DRAWINGS.

10 14 01.2 - BUILDING MOUNTED LETTERS — PROVIDE PROJECTED STUD MOUNTED LETTERS SECURED TO WORK OF 10 73 16.0 ALUMINUM CANOPY IN ACCORDANCE WITH SECTION 10 14 01 - IDENTIFYING DEVICES.

10 14 01.3 - SITE ENTRY SIGN — PROVIDE EXTERIOR SIGN PANEL SYSTEM WITH INTERNAL POSTS WHERE INDICATED ON THE CONTRACT DRAWINGS. SITE ENTRY SIGN SHALL INCLUDE SINGLE FACE INDENTIYING SIGNAGE AND OWNER GRAPHIC WITH CLOSURE PANELS ON ALL SIDES.

REV	ISSUED FOR	DATE	BY
3	ADDENDUM NO. 5	APRIL 24	MWM
2	ADDENDUM NO. 3	MAR 24	MWM
1	ADDENDUM NO. 2	MAR 24	MWM
0	ISSUED FOR BIDS	FEB 24	MWM

PROJECT ENGINEER: K. BARRETT
DESIGNED BY: J. WOJCIESKI
DRAWN BY: M. TAWADROUS
CHECKED BY: W. RUSSELL

IF THIS BAR DOES NOT MEASURE 1" THEN DRAWING IS NOT TO FULL SCALE — 0 1/2" 1"

REGISTERED ARCHITECT — ANTHONY — No. 30719 NEW YORK STATE — COMMONWEALTH OF MASSACHUSETTS

Hazen

HAZEN AND SAWYER
100 GREAT MEADOW ROAD, SUITE 702
WETHERSFIELD, CT 06109

SPRINGFIELD WATER AND SEWER COMMISSION

WEST PARISH WATER TREATMENT PLANT

FILED SUB-BID

ARCHITECTURAL
ARCHITECTURAL NOTES - SHEET 2

DATE: FEBRUARY 2024
HAZEN NO.: 90398-004
CONTRACT NO.: 24-51
DRAWING NUMBER: A-003

Autodesk Docs://90398-004_West Parish Filter WTF/90398-004-Arch Schedules.rvt 4/18/2024 2:16:58 PM

10 21 13 METAL TOILET COMPARTMENTS

10 21 13.0 - TOILET PARTITIONS — PROVIDE EUROPEAN STYLE TOILET PARTITIONS AND SCREENS IN ACCORDANCE WITH SECTION 10 21 13 – TOILET PARTITIONS. REFER TO NOTE 10 21 13.1 FOR SUPPORT .

10 21 13.1 - TOILET PARTITION SUPPORT — PROVIDE CEILING TOILET PARTITIONS SUPPORT USING CONTINUOUS MC8X 21.4 STEEL CHANNELS HUNG FROM STRUCTURE ABOVE AT A MAXIMUM OF 4-FEET ON CENTER USING 1/4-INCH DIAMETER THREADED RODS. CROSS BRACE STEEL CHANNELS WITH 2"X 2" X 3/16" STEEL ANGLES TO COMPLY WITH SEISMIC CODE REQUIREMENTS AS INDICATED ON THE STRUCTURAL DRAWING. COORDINATE WORK FOR LOCATION AND HOLES SIZES WITH WORK OF AND 10 21 13 – TOILET PARTITIONS.

10 22 60 PARTITIONS

10 22 26.0 - OPERABLE PARTITION — PROVIDE MANUALLY OPERATED PAIRED PANEL OPERABLE PARTITION WITH MINIMUM STC 52 AND FACTORY APPLIED CLASS "A" RATED MATERIAL IN ACCORDANCE WITH SECTION 10 22 26 – OPERABLE PARTITION. REFER TO STRUCTURAL DOCUMENTS FOR STRUCTURAL SUPPORT.

10 28 00 TOILET AND BATH ACCESSORIES

10 28 00.0 - RECESSED TOILET ACCESSORIES — PROVIDE AAB COMPLIANT RECESSED TOILET ACCESSORIES AT WORK OF 09 29 00.0 GYPSUM BOARD SYSTEM IN LOCATIONS SHOWN ON ARCHITECTURAL DRAWINGS. PROVIDE CONCEALED INSERTS AND ANCHORAGE AS NECESSARY FOR MOUNTING OF TOILET ACCESSORIES IN ACCORDANCE WITH SECTION 10 28 00. RECESSED MOUNT TOILET ACCESSORIES TO BE COORDINATED WITH WORK OF SECTION 09 29 00.

10 28 00.1 - SURFACE MOUNTED TOILET ACCESSORIES — PROVIDE AAB SURFACE MOUNTED COMPLIANT TOILET ACCESSORIES AT WORK OF 04 22 23.23.0 GROUND FACE BLOCK IN LOCATIONS SHOWN ON ARCHITECTURAL DRAWINGS. PROVDE CONCEALED INSERTS AND ANCHORAGE AS NECESSARY FOR MOUNTING OF TOILET ACCESSORIES IN ACCORDANCE WITH SECTION 10 28 00. SURFACE MOUNTED TOILET ACCESSORIES TO BE COORDINATED WITH WORK OF SECTION 04 22 23.23.

10 28 00.2 - GRAB BARS — PROVIDE 1 1/2-INCH O.D. CONCEALED MOUNTING, HEAVY DUTY STAINLESS STEEL WITH SANITARY SAFETY GRIP. UNITS SHALL BE IN LOCATION AND QUANTITIES AS INDICATED ON THE CONTRACT DRAWINGS

10 28 00.3 - MIRROR — PROVIDE SURFACE MOUNTED MIRROR WITH STAINLESS STEEL FRAME 24-INCHES WIDE BY 36-INCHES HIGH, MOUNTED IN ACCORDANCE WITH SECTION 10 28 00 – TOILET AND BATH ACCESSORIES.

10 28 00.4 - FRAMELESS MIRROR — PROVIDE FRAMELESS MIRRORS OF SIZE SHOWN ON DRAWINGS, MOUNTED IN ACCORDANCE WITH SECTION 10 28 00 – TOILET AND BATH ACCESSORIES.

10 28 00.5 - CLOTHES HOOK UNIT — PROVIDE WALL MOUNTED STAINLESS-STEEL HOOK UNIT CONSISTING OF 18-INCH-LONG MOUNTING PLATE WITH THREE (3) SECURED HOOKS AT EACH SHOWER AREA.

10 28 00.6 - CLOTHES HOOK — PROVIDE WALL MOUNTED STAINLESS-STEEL HOOK AT SINGLE OCCUPANCY RESTROOMS AND PARENTS ROOM.

10 28 00.7 - SHOWER CURTAIN — PROVIDE SHOWER CURTAIN, ROD AND HOOKS AT EACH SHOWER ENCLOSURE IN ACCORDANCE WITH SECTION 10 28 00.

10 28 00.8 - SHOWER SEAT — PROVIDE SURFACE MOUNTED FOLDING REVERSIBLE SHOWER SEAT AT SHOWER IN ACCESSIBLE RESTROOM IN ACCORDANCE WITH SECTION 10 28 00.

10 28 00.9 - CHANGING STATION — PROVIDE WALL MOUNTED CHANGING STATION IN ACCORDANCE WITH SECTION 10 28 00.

10 28 00.10 - MOP HOLDER — PROVIDE WALL MOUNTED MOP HOLDER AT ALL JANITOR ROOMS IN ACCORDANCE WITH SECTION 10 28 00.

10 44 16 FIRE EXTINGUISHERS

10 44 16.0 - FIRE EXTINGUISHERS — PROVIDE WALL MOUNTED "DC" TYPE FIRE EXTINGUISHER IN MECHANICAL ROOMS, HVAC ROOMS AND PROCESS AREAS. PROVIDE "CO2" TYPE FOR ELECTRICAL ROOM AND CONTROL/ELECTRICAL INSTRUMENTATION ROOM UNLESS OTHERWISE NOTED. ALLOW FOR ONE FIRE EXTINGUISHER PER EVERY 60-FEET OF TRAVEL DISTANCE. PROVIDE RECESSED FIRE EXTINGUISHER CABINETS WHERE LOCATED IN GYPSUM PARTITIONS. PROVIDE SURFACE MOUNTED FIRE EXTINGUISHER CABINETS WHERE LOCATED AT MASONRY AND CONCRETE WALLS.

10 50 00 LOCKERS

10 50 00.0 - LOCKERS — PROVIDE 18-INCH-DEEP BY 18-INCH-WIDE LOCKERS MOUNTED ON LOCKER BASE WITH SLOPED TOP. PROVIDE ALL FILLER PANELS TO COMPLETE A CONTINUOUS ATTACHMENT OF 90 DEGREE CORNER AND FINISHED EXPOSED SIDE PANELS.

10 50 00.1 - LOCKER BENCH — PROVIDE THREE (3) TWELVE-INCH BY FORTY-EIGHT-INCH LONG BENCHES IN ACCORDANCE WITH SECTION 10 50 00 – LOCKERS.

10 50 00.2 - AAB LOCKER BENCH — PROVIDE ONE (1) TWENTY-INCH BY FORTY-TWO-INCH LONG AAB COMPLIANT LOCKER BENCH IN ACCORDANCE WITH SECTION 10 50 00 – LOCKERS AND MASSACHUSETTS ACCESSIBILITY CODE (521 CMR: ARCHITECTURAL ACCESS BOARD).

10 73 16 CANOPIES

10 73 16.0 - ALUMINUM CANOPY — PROVIDE EXTRUDED ALUMINUM CANOPY WITH SOLID DECKING AND LOUVER SYSTEM IN CONFIGURATION AS INDICATED ON THE ARCHITECTURAL DRAWINGS. ALUMINUM CANOPY TO BE POST AND BUILDING SUPPORTED AND INCLUDE CONCEALED PERIMETER GUTTER SYSTEM. COORDINATE GUTTER LOCATIONS WITH SITE CIVIL REQUIREMENTS. COORDINATE BUILDING SUPPORT WITH BUILDING WALL SYSTEMS AND STRUCTURAL REQUIREMENTS.

DIVISION 11

11 40 00 FOODSERVICE EQUIPMENT

11 40 00.0 - AAB COMPLIANT REFRIGERATOR — PROVIDE FULL HEIGHT AAB COMPLIANT REFRIGERATOR WITH WATER SUPPLY AND DEDICATED ELECTRICAL OUTLET.

11 40 00.1 - MICROWAVE OVEN — PROVIDE MICROWAVE OVEN WITH DEDICATED ELECTRICAL OUTLET.

11 40 00.2 - UNDER-COUNTER REFRIGERATOR — PROVIDE UNDER-COUNTER AAB COMPLIANT REFRIGERATOR WITH WATER SUPPLY AND DEDICATED ELECTRICAL OUTLET.

11 40 00.3 - DISHWASHER — PROVIDE AAB COMPLIANT DISHWASHER WITH WATER SUPPLY, SANITARY WASTE, AND DEDICATED ELECTRICAL OUTLET. 1

11 53 00 LABORATORY EQUIPMENT

11 53 00.0 - LABORATORY EQUIPMENT — PROVIDE LABORATORY EQUIPMENT IN ACCORDANCE WITH SECTION 11 53 00 – LABORATORY EQUIPMENT. COORDINATION RELOCATION OF EXISTING LABORATORY EQUIPMENT WITH OWNER.

DIVISION 12 FURNISHES

12 24 13 ROLLER WINDOW SHADES

12 24 13.0 - ROLLER WINDOW SHADES — PROVIDE MECHANICAL ROLLER SHADES FOR EXTENT OF ALL EXTERIOR GLAZED OPENINGS AT OFFICES, LABORATORY, LOBBY, BREAK ROOM AND CONTROL ROOM IN ACCORDANCE WITH SECTION 12 24 13 – ROLLER WINDOW SHADES.

12 30 01 STORAGE EQUIPMENT

12 30 01.0 - HEAVY DUTY METAL SHELVING — PROVIDE 160 LINEAR FEET OF CLOSED END STORAGE SHELVING OF 24-INCH DEPTH AS SELECTED BY OWNER IN WIDTHS OF 36-INCHES AND 48-INCHES AS REQUIRED TO FIT IN WORKROOM. PROVIDE 6 SHELVES TO A MAXIMUM HEIGHT OF 72-INCHES ABOVE FINISHED FLOOR. ANY SHELVING LEFT OVER TO BE TURNED OVER IN 36-INCH WIDTH UNIT TO OWNER.

12 30 01.1 - STORAGE CABINETS — PROVIDE 100 LINEAR FEET OF CLOSED END STORAGE SHELVING OF 24-INCH DEPTH AS SELECTED BY OWNER IN WIDTHS OF 36-INCHES AND 48-INCHES AS REQUIRED TO FIT IN WORKROOM. PROVIDE 6 SHELVES TO A MAXIMUM HEIGHT OF 72-INCHES ABOVE FINISHED FLOOR. ANY SHELVING LEFT OVER TO BE TURNED OVER IN 36-INCH WIDTH UNIT TO OWNER.

12 35 00 SPECIALTY CASEWORK

12 35 53.0 - LABORATORY CASEWORK — PROVIDE METAL LABORATORY FURNITURE, INCLUDING BASE AND WALL CABINETS WITH END PANELS; FREESTANDING TABLES; SERVICE SHELVES, LEDGES AND DECKS; EPOXY RESIN TOPS AND BACKSPLASHES, SINK BASINS, SERVICE FIXTURES AS SHOWN ON THE CONTRACT DRAWINGS AND IN ACCORDANCE WITH SECTION 12 35 53.13. ALLOW FOR CONTINUOUS STEEL LABORATORY CABINETRY TO RUN THE PERIMETER OF THE ROOM. COORDINATE INSTALLATION WITH PLUMBING AND ELECTRICAL CONTRACTORS.

12 51 00 FURNITURE

12 51 00.0 - OFFICE FURNITURE — ALL OFFICE FURNITURE TO BE PROVIDED UNDER SEPARATE CONTRACT. FURNITURE LOCATIONS SHOWN ON THE ARCHITECTURAL DRAWINGS ARE FOR COORDINATION PURPOSES. ALL FLOOR, WALL, AND CEILING FINISHES

DIVISION 14 CONVEYING EQUIPMENT

14 21 23 ELECTRIC TRACTION PASSENGER ELEVATOR - (THIS SECTION IS PART OF THE FILED SUB BID REQUIRED FOR ELEVATORS)

14 21 23.0 - ELECTRIC ELEVATOR, PASSENGER — PROVIDE CUSTOM TRACTION ELECTRIC PASSENGER ELEVATOR. COORDINATE WORK OF 14 21 23 WITH ASSOCIATED ELECTRICAL, SIGNAL AND PLUMBING INCLUDED AS PART OF THE WORK. ALL DIMENSIONS INDICATED ON THE CONTRACT DRAWINGS FOR THE WORK OF SECTION 14 21 23.0 ELECTRIC TRACTION PASSENGER ELEVATOR INCLUDING BUT NOT LIMITED TO WORK OF NOTE 14 21 23.1 ELEVATOR METALS ARE SUBJECT TO THE ELEVATOR MANUFACTURER SELECTED FOR THE PROJECT AND SHALL BE BASED ON APPROVED SHOP DRAWINGS SUBMITTED BY THE ELEVATOR SUBCONTRACTOR. 2

14 21 23.1 - ELEVATOR METALS — PROVIDE DUNNAGE BEAM, SUPPORT BRACKETS, AND ASSOCIATED METALS, INCLUDING SUMP PIT GRATING COVER AND LADDER.

14 21 23.2 - ELEVATOR PLUMBING AND ELECTRICAL — PROVIDE PIT SUMP PUMP WITH TRACTION MINDER, CONVENIENCE OUTLET, SERVICE LIGHT AT ELEVATOR PIT. PROVIDE CONVENIENCE OUTLET, SERVICE LIGHT AT THE TOP OF ELEVATOR SHAFT. PROVIDE INTERCONNECTION FOR ASSOCIATED SIGNAL, H/C CAB PHONE, FIRE ALARM, BACK-UP BATTERY AS REQUIRED FOR COMPLETE ELEVATOR INSTALLATION.

14 21 23.3 - ELEVATOR VENTILATION — PROVIDE VENTILATION IN ACCORDANCE WITH CURRENT CODE REQUIREMENTS AS WORK OF DIVISION 23 HVAC. CONTRACTOR TO COORDINATE AS REQUIRED FOR COMPLETE ELEVATOR INSTALLATION.

14 21 23.4 - ELEVATOR PIT — ELEVATOR PIT DEPTH TO BE 5-FEET MAXIMUM. CONTRACTOR TO COORDINATE THE PIT DEPTH WITH THE ELEVATOR MANUFACTURER AND ELEVATOR SUBCONTRACTOR. 2

14 21 23.5 - ELEVATOR SUMP PUMP PIT — ELEVATOR SUMP PUMP PIT TO BE 2-FEET WIDE BY 2-FEET LONG BY 2-FEET DEEP MAXIMUM.

14 21 23.6 - ELEVATOR CAB FLOOR RECESS — PROVIDE RECESSED 1 ¼-INCH TO RECEIVE MESH REINFORCED TYPE A4 CONCRETE, THIN SET BED WITH PORCELAIN TILE. REFER TO SPECIFICATION SECTION 09 30 00 – TILING FOR TILE TO BE INSTALLED AT ELEVATOR CAB FLOOR.

14 21 23.7 - ELEVATOR EMERGENCY COMMUNICATION SYSTEM — PROVIDE EMERGENCY TWO WAY COMMUNICATION CAPABLE PHONE FOR THE DEAF, HARD OF HEARING AND SPEECH IMPAIRED WITH CAT 6 CABLE AND A SECOND BACKUP CAT6 CABLE WITH INTERCONNECTION OF IP BASED PHONE SYSTEM . REFER TO DIVISIONS 40 FOR CABLE AND IP SERVICE REQUIREMENTS AND NOTE DIVISION 40.1. RUN COMMUNICATION INTERCONNECTION SERVICE TO MAIN CONTROL ROOM.

DIVISION 21 FIRE SUPRESSION **(THIS SECTION IS PART OF THE FILED SUB BID REQUIRED FOR FIRE PROTECTION SPRINKLER SYSTEM)**

21 12 00 - FIRE SUPPRESSION STANDPIPES

21 12 00.0 - FIRE DEPARTMENT CONNECTION — COORDINATE LOCATIONS OF ALL FIRE DEPARTMENT CONNECTIONS WITH FIRE SPRINKLER CONTRACTOR. FIRE DEPARTMENT CONNECTIONS SHALL BE IN ACCORDANCE WITH SECTION 21 12 00.

DIVISION 22 PLUMBING **- (THIS SECTION IS PART OF THE FILED SUB BID REQUIRED FOR PLUMBING)**

22 14 13 - FACILITY STORM DRAINAGE

22 14 13.0 - DOWNSPOUT NOZZLE — STAINLESS STEEL DOWNSPOUT NOZZLE AS PROVIDED UNDER PLUMBING CONTRACT AND IN ACCORDANCE WITH SPECIFICATION 22 14 13. EXACT LOCATION OF DOWNSPOUT NOZZLES TO BE COORDINATED WITH PLUMBER AND POSITIONED TO DRAIN INTO LANDSCAPED AREAS UNLESS NOTED OTHERWISE.

22 40 00 PLUMBING FIXTURES

22 40 00.0 - PLUMBING FIXTURES — COORDINATE LOCATIONS OF ALL PLUMBING FIXTURES WITH PLUMBING CONTRACTOR. PLUMBING FIXTURES, INCLUDING BUT NOT LIMITED TO, WATER CLOSETS, LAVATORIES, SHOWERS, SERVICE SINKS, DRINKING FOUNTAINS, BOTTLE FILLERS, EMERGENCY EYEWASH AND SHOWERS, SHALL BE IN ACCORDANCE WITH SECTION 22 40 00.

22 40 00.1 - WATER FOUNTAINS AND FILLING STATIONS — COORDINATE LOCATIONS OF ALL WATER FOUNTAINS AND FILLING STATIONS WHERE INDICATED ON THE CONTRACT DRAWINGS. WATER FOUNTAINS AND FILLING STATIONS SHALL BE IN ACCORDANCE WITH SECTION 22 40 00.

DIVISION 26 ELECTRICAL **- (THIS SECTION IS PART OF THE FILED SUB BID REQUIRED FOR ELECTRICAL WORK)**

26 05 53 - IDENTIFICATION FOR ELECTRICAL SYSTEMS

26 05 33.13.0 - CONDUITS — CONTRACTOR TO COORDINATE CONCEALED AND EXPOSED CONDUITS AS INDICATED ON THE ELECTRICAL DRAWINGS AND IN ACCORDANCE WITH SECTION 26 05 33.13.

26 41 13 LIGHTNING PROTECTION FOR STRUCTURES

26 41 13.0 - LIGHTNING PROTECTION SYSTEM — PROVIDE LIGHTNING PROTECTION SYSTEM IN ACCORDANCE WITH WORK ASSOCIATED WITH DIVISION 26. REFER TO ELECTRICAL DRAWINGS FOR QUANTITY. ALL WIRING SHALL BE CONCEALED FROM VIEW.

DIVISION 40 PROCESS INTERCONNECTIONS **- (THIS SECTION IS PART OF THE FILED SUB BID REQUIRED FOR PROCESS INTERCONNECTIONS WORK)**

40 67 23 - CONTROL SYSTEM CONSOLES

40 67 23.0 - CONTROL ROOM CONSOLES — PROVIDE FURNITURE FOR THREE WORKSTATIONS LOCATED IN CONTROL ROOM AT WATER TREATMENT PLANT AND ONE WORKSTATION LOCATED IN CONTROL ROOM OF DEWATERING BUILDING AS INDICATED ON ARCHITECTURAL DRAWINGS AND IN ACCORDANCE WITH SECTION 40 67 23 – CONTROL SYSTEM CONSOLES.

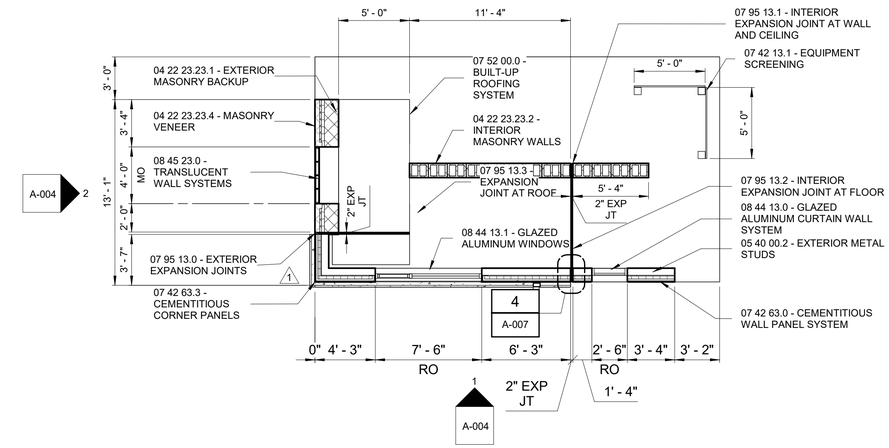

MOCK-UP WALL - PLAN

3/16" = 1'-0"

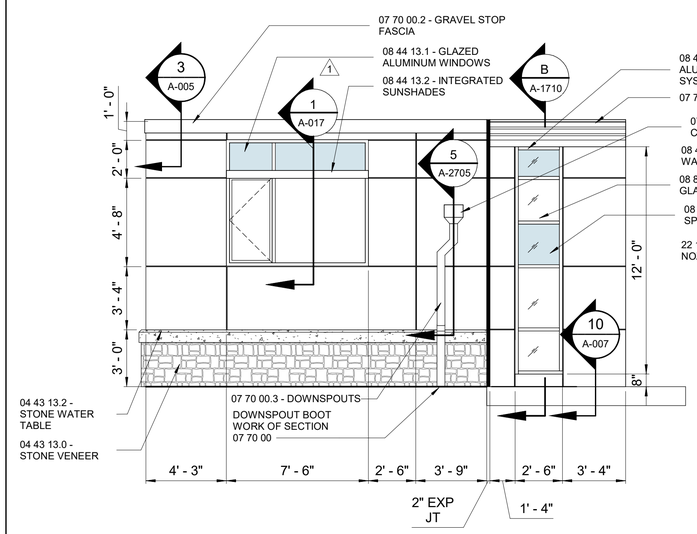

MOCK- UP WALL ELEVATION - 1

1/4" = 1'-0"

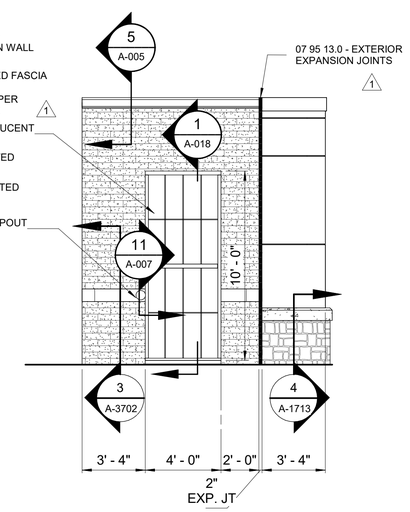

MOCK- UP WALL ELEVATION - 2

1/4" = 1'-0"

REV	ISSUED FOR	DATE	BY
2	ADDENDUM NO. 5	APRIL 24	MWM
1	ADDENDUM NO. 3	MAR 24	MWM
0	ISSUED FOR BIDS	FEB 24	MWM

PROJECT ENGINEER: K. BARRETT
DESIGNED BY: J. WOJCIESKI
DRAWN BY: M. TAWADROUS
CHECKED BY: W. RUSSELL

IF THIS BAR DOES NOT MEASURE 1" THEN DRAWING IS NOT TO FULL SCALE — 0 1/2" 1"

REGISTERED ARCHITECT ANTHONY STAUNTON No. 30719 NEW YORK STATE COMMONWEALTH OF MASSACHUSETTS

Hazen

HAZEN AND SAWYER
100 GREAT MEADOW ROAD, SUITE 702
WETHERSFIELD, CT 06109

SPRINGFIELD WATER AND SEWER COMMISSION

WEST PARISH WATER TREATMENT PLANT

FILED SUB-BID

ARCHITECTURAL
ARCHITECTURAL NOTES - SHEET 3

DATE: FEBRUARY 2024
HAZEN NO.: 90398-004
CONTRACT NO.: 24-51
DRAWING NUMBER: A-004

Autodesk Docs://90398-004_West Parish Filter WTF/90398-004-Arch Schedules.rvt
4/18/2024 2:16:58 PM

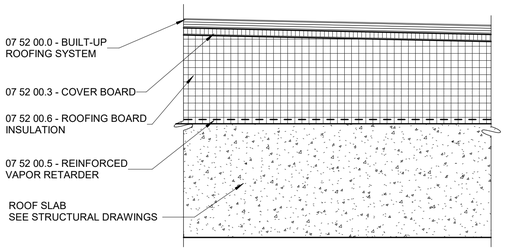

TYPICAL ROOF ASSEMBLY

DETAIL 1 — 1 1/2" = 1'-0" — A-005

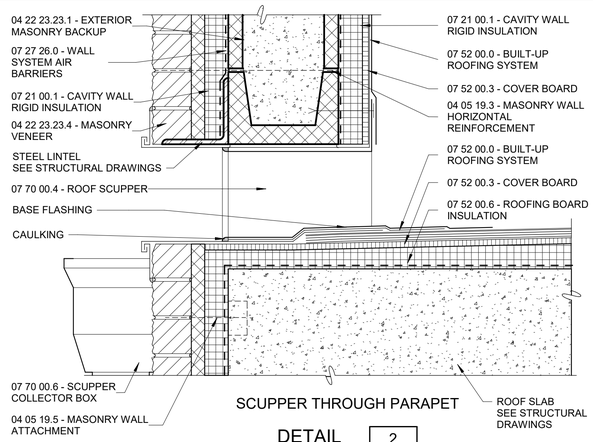

SCUPPER THROUGH PARAPET

DETAIL 2 — 1 1/2" = 1'-0" — A-005

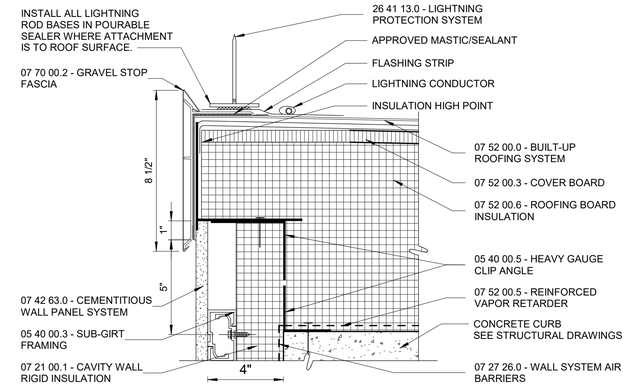

ROOF FASCIA DETAIL

DETAIL 3 — 3" = 1'-0" — A-005

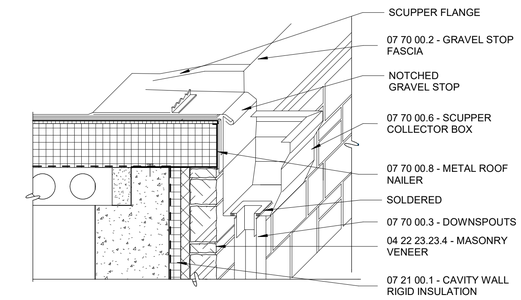

SCUPPER AT GRAVEL STOP FASCIA AT MASONRY VENEER

DETAIL 4 — NTS — A-005

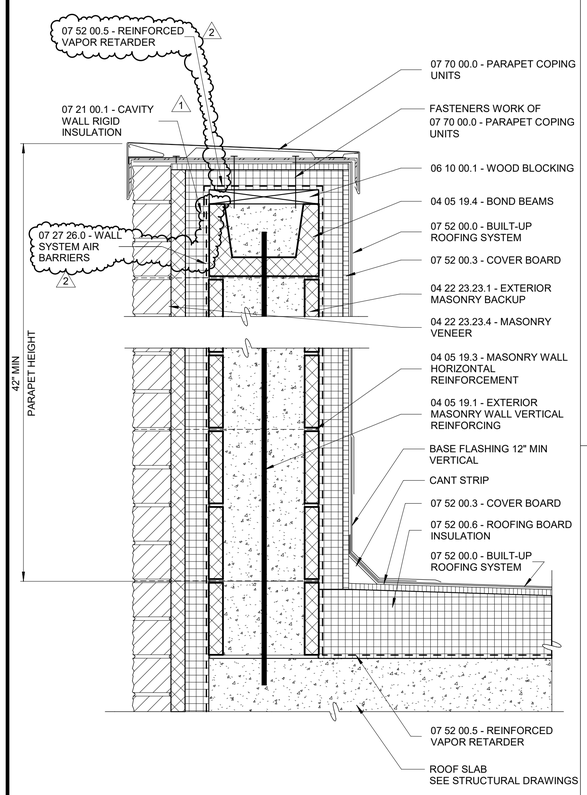

COPING AND FLASHING AT PARAPET

DETAIL 5 — 1 1/2" = 1'-0" — A-005

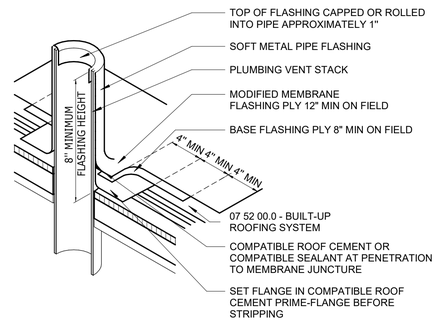

ROOF PLUMBING VENT

DETAIL 6 — NTS — A-005

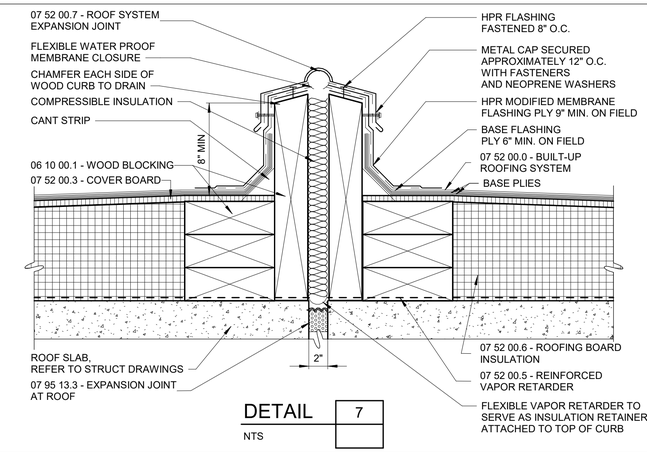

DETAIL 7 — NTS

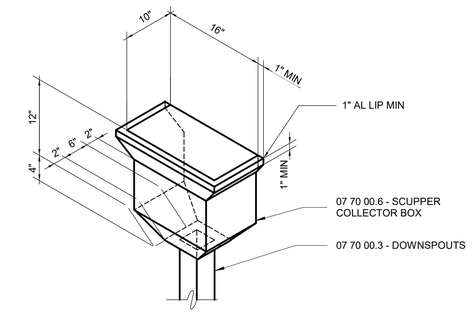

TYPICAL COLLECTION BOX

DETAIL 8 — NTS — A-005

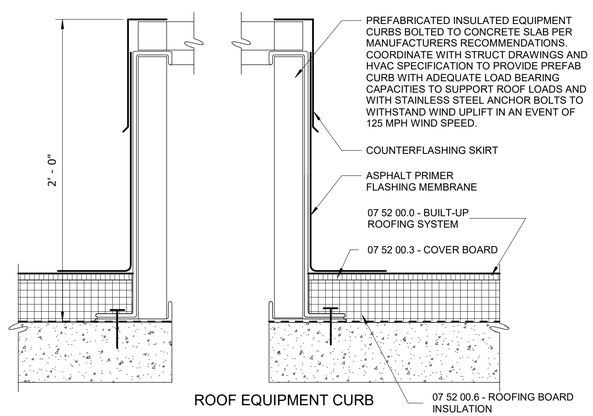

ROOF EQUIPMENT CURB

DETAIL 9 — 3" = 1'-0" — A-005

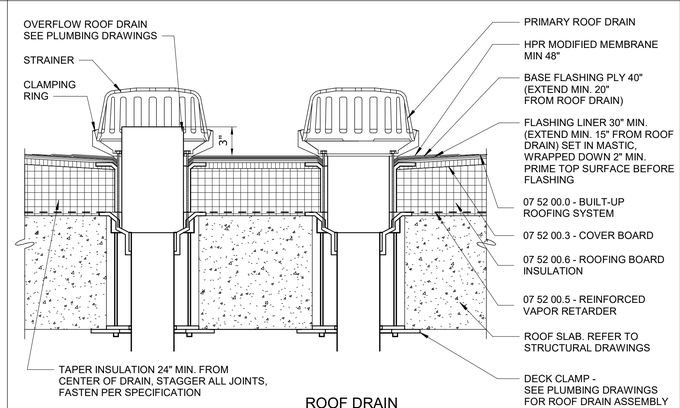

ROOF DRAIN

DETAIL 10 — 1 1/2" = 1'-0" — A-005

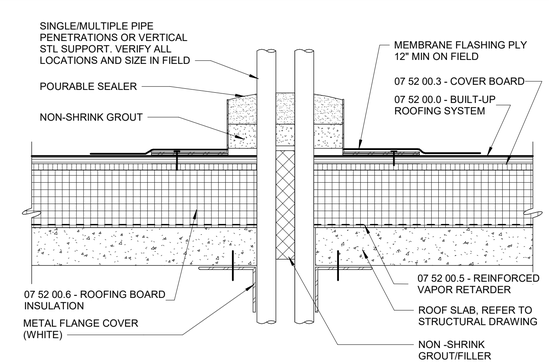

POURABLE SEALER POCKET

DETAIL 11 — 3" = 1'-0" — A-005

3" = 1'-0" 2" 0 2 4 6"
1 1/2" = 1'-0" 4" 0 1'

REV	ISSUED FOR	DATE	BY
2	ADDENDUM NO. 5	APRIL 24	MWM
1	ADDENDUM NO. 3	MAR 24	MWM
0	ISSUED FOR BIDS	FEB 24	MWM

PROJECT ENGINEER:	K. BARRETT
DESIGNED BY:	J. WOJCIESKI
DRAWN BY:	M. TAWADROUS
CHECKED BY:	W. RUSSELL

IF THIS BAR DOES NOT MEASURE 1" THEN DRAWING IS NOT TO FULL SCALE — 0 1/2" 1"

REGISTERED ARCHITECT ANTHONY SALVATORE SANTINI No. 30719 NEW YORK STATE COMMONWEALTH OF MASSACHUSETTS

Hazen

HAZEN AND SAWYER
100 GREAT MEADOW ROAD, SUITE 702
WETHERSFIELD, CT 06109

SPRINGFIELD WATER AND SEWER COMMISSION

WEST PARISH WATER TREATMENT PLANT

FILED SUB-BID

ARCHITECTURAL ROOF DETAILS

DATE:	FEBRUARY 2024
HAZEN NO.:	90398-004
CONTRACT NO.:	24-51
DRAWING NUMBER:	A-005

Autodesk Docs://90398-004_West Parish Filter WTF/90398-004-Arch Schedules.rvt
4/18/2024 1:23:38 PM

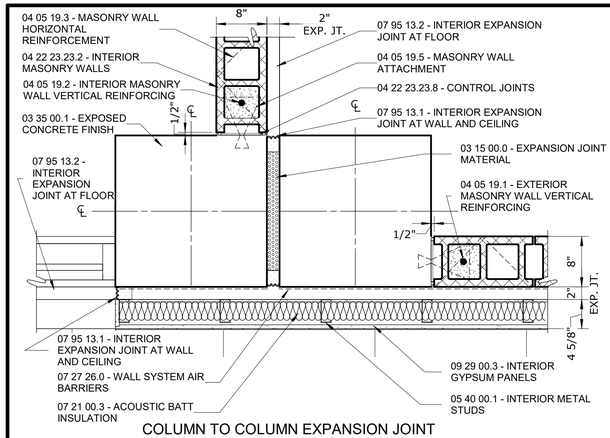

COLUMN TO COLUMN EXPANSION JOINT

DETAIL 1
1" = 1'-0" A-006

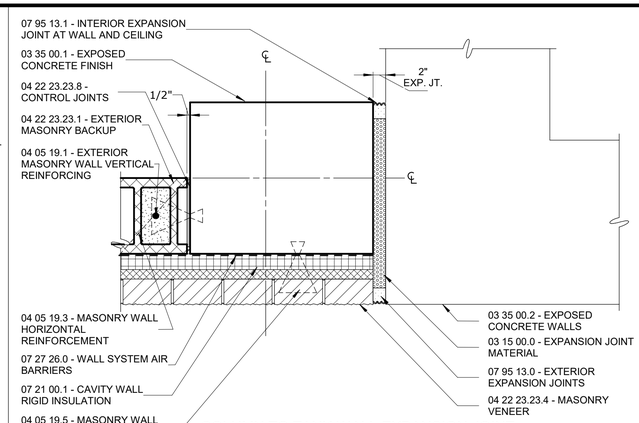

COLUMN TO TANK WALL EXPANSION JOINT

DETAIL 2
1" = 1'-0" A-006

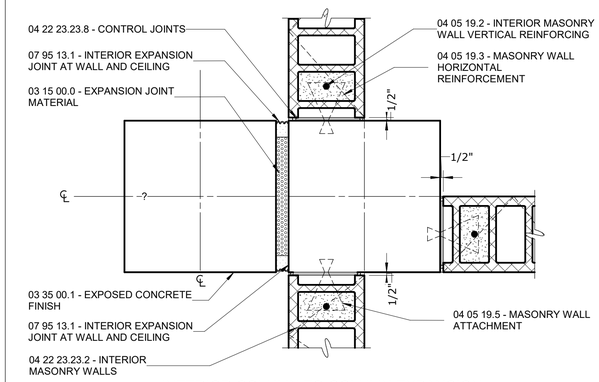

INTERIOR COLUMN TO COLUMN EXPANSION JOINT

DETAIL 3
1" = 1'-0" A-006

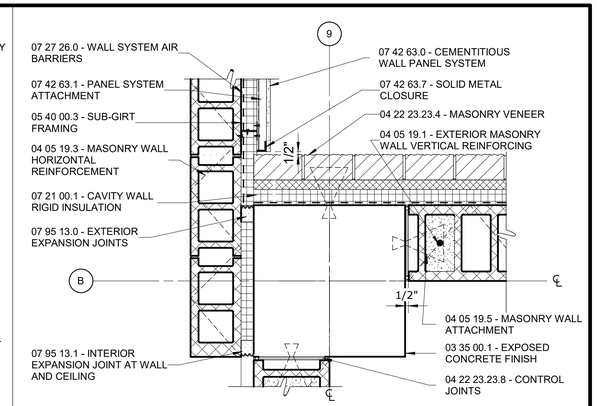

COLUMN TO BACK UP MASONRY EXPANSION JOINT

DETAIL 4
1" = 1'-0" A-006

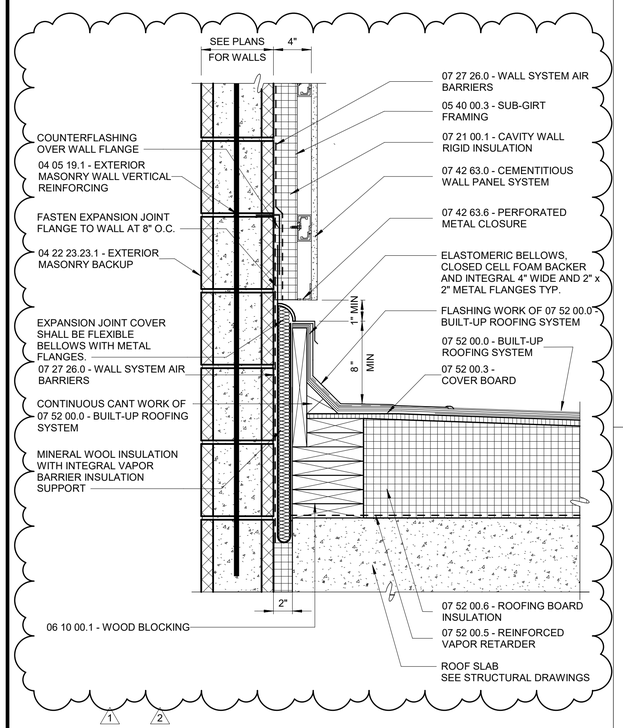

ROOF TO WALL EXPANSION JOINT

DETAIL 8
1 1/2" = 1'-0" A-006

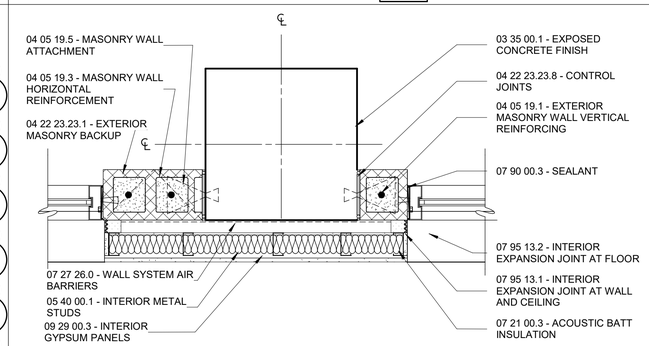

COLUMN TO STUD WALL EXPANSION JOINT

DETAIL 5
1" = 1'-0" A-006

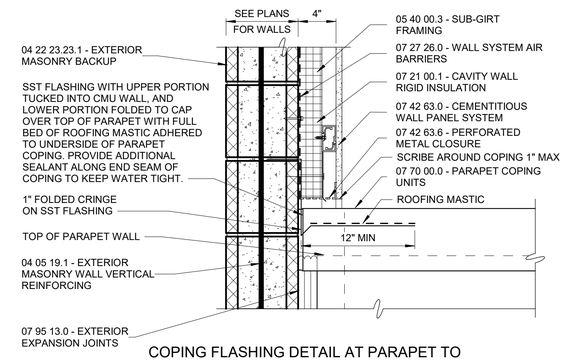

COPING FLASHING DETAIL AT PARAPET TO WALL EXPANSION JOINT

DETAIL 6
1 1/2" = 1'-0" A-006

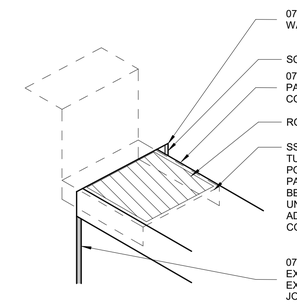

ISOMETRIC COPING FLASHING

DETAIL 7
NTS A-006

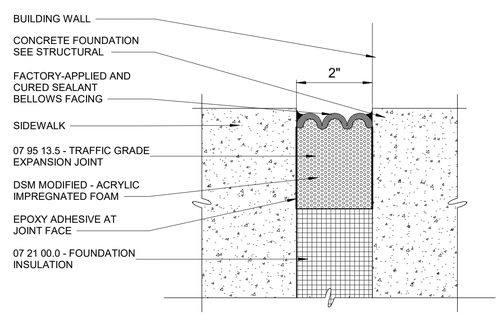

TRAFFIC GRADE EXPANSION JOINT

DETAIL 9
6" = 1'-0" A-006

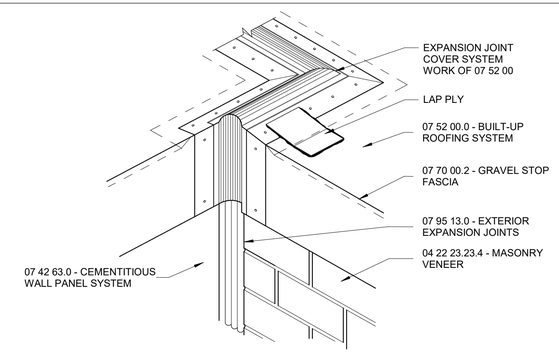

EXPANSION JOINT COVER

DETAIL 10
NTS A-006

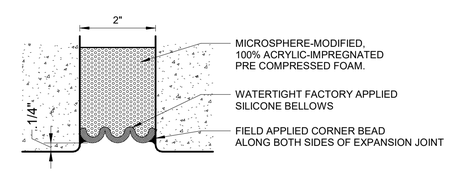

EXPANSION JOINT AT WALLS, FLOORS, AND CEILINGS

DETAIL 11
6" = 1'-0" A-006

6" = 1'-0" 1" 0 1 2 3"
1 1/2" = 1'-0" 4" 0 1'
1" = 1'-0" 12" 6 0 1'

REV	ISSUED FOR	DATE	BY
2	ADDENDUM NO. 5	APRIL 24	MWM
1	ADDENDUM NO. 2	MAR 24	MWM
0	ISSUED FOR BIDS	FEB 24	MWM

PROJECT ENGINEER:	K. BARRETT
DESIGNED BY:	J. WOJCIESKI
DRAWN BY:	M. TAWADROUS
CHECKED BY:	W. RUSSELL

IF THIS BAR DOES NOT MEASURE 1" THEN DRAWING IS NOT TO FULL SCALE 0 1/2" 1"

REGISTERED ARCHITECT ANTHONY S. LINE No. 30719 NEW YORK STATE COMMONWEALTH OF MASSACHUSETTS

Hazen

HAZEN AND SAWYER
100 GREAT MEADOW ROAD, SUITE 702
WETHERSFIELD, CT 06109

SPRINGFIELD WATER AND SEWER COMMISSION

WEST PARISH WATER TREATMENT PLANT

FILED SUB-BID

ARCHITECTURAL
EXPANSION JOINT DETAILS

DATE:	FEBRUARY 2024
HAZEN NO.:	90398-004
CONTRACT NO.:	24-51
DRAWING NUMBER:	A-006

Autodesk Docs://90398-004_West Parish Filter WTF/90398-004-Arch Schedules.rvt
4/18/2024 1:23:39 PM

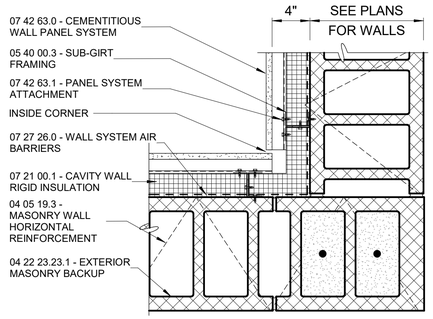

CEMENTITIOUS WALL PANEL SYSTEM AT MASONRY WALL - INSIDE CORNER

DETAIL 1
1 1/2" = 1'-0" A-007

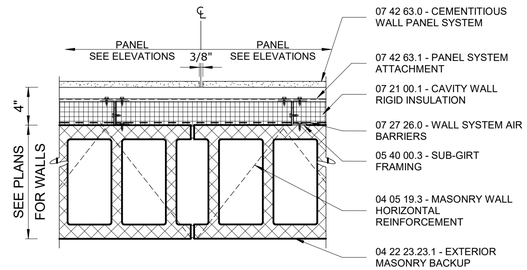

CEMENTITIOUS WALL PANEL SYSTEM AT MASONRY WALL - VERTICAL JOINT PLAN

DETAIL 2
1 1/2" = 1'-0" A-007

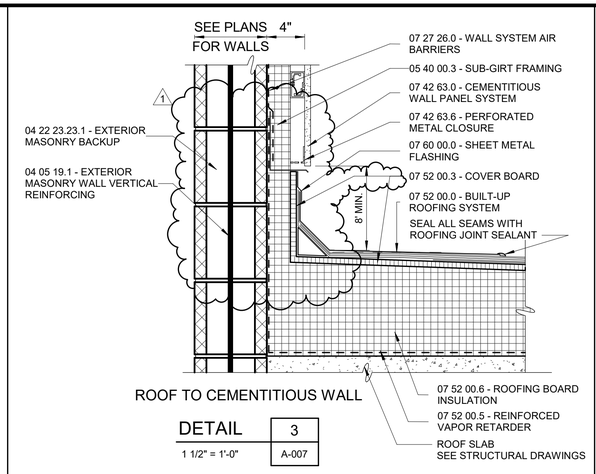

ROOF TO CEMENTITIOUS WALL

DETAIL 3
1 1/2" = 1'-0" A-007

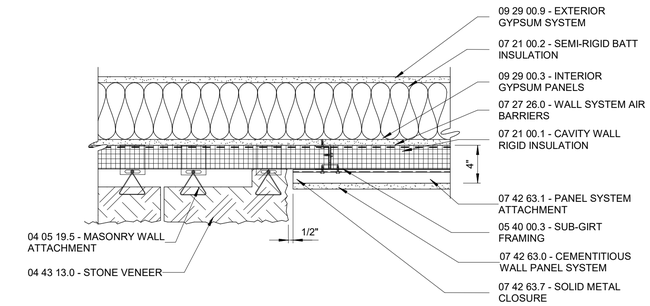

CEMENTITIOUS WALL PANEL SYSTEM AT JUNCTION WITH STONE WALL SYSTEM

DETAIL 4
1 1/2" = 1'-0" A-007

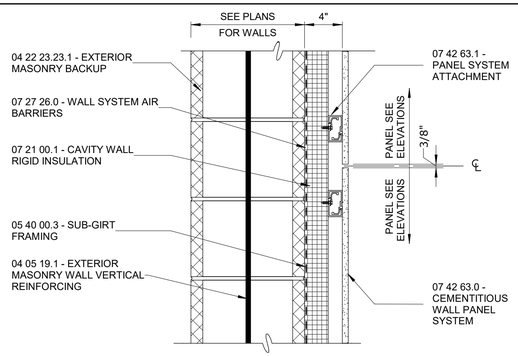

CEMENTITIOUS WALL PANEL SYSTEM AT MASONRY WALL - HORIZONTAL JOINT

DETAIL 5
1 1/2" = 1'-0" A-007

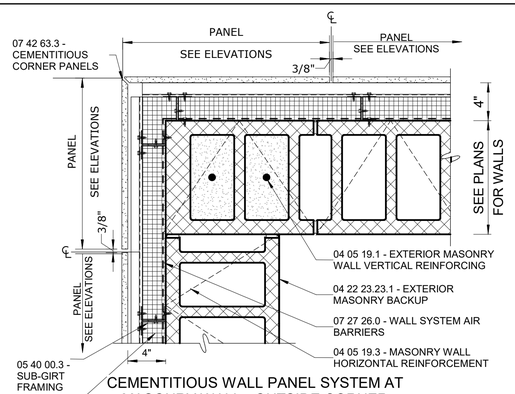

CEMENTITIOUS WALL PANEL SYSTEM AT MASONRY WALL - OUTSIDE CORNER

DETAIL 6
1 1/2" = 1'-0" A-007

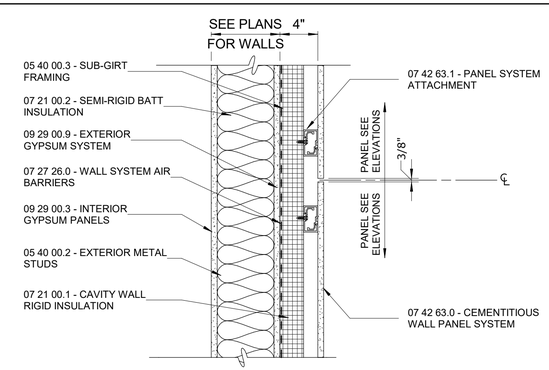

CEMENTITIOUS WALL PANEL SYSTEM AT STUD WALL- HORIZONTAL JOINT

DETAIL 7
1 1/2" = 1'-0" A-007

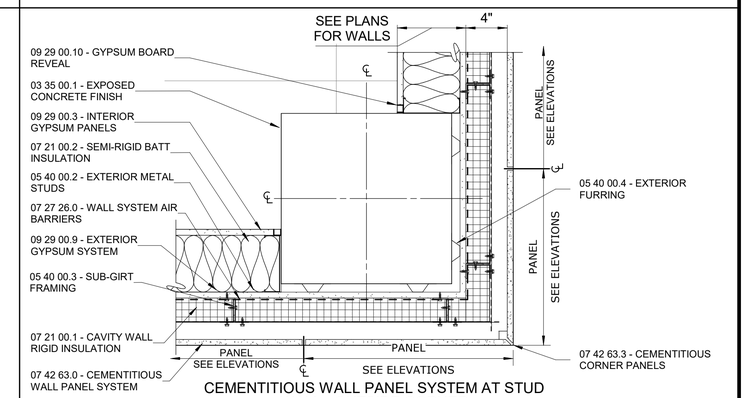

CEMENTITIOUS WALL PANEL SYSTEM AT STUD WALL - OUTSIDE CORNER

DETAIL 8
1 1/2" = 1'-0" A-007

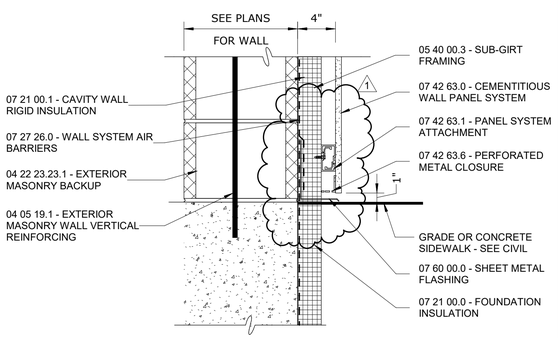

CEMENTITIOUS WALL PANEL SYSTEM AT MASONRY WALL - AT GRADE

DETAIL 9
1 1/2" = 1'-0" A-007

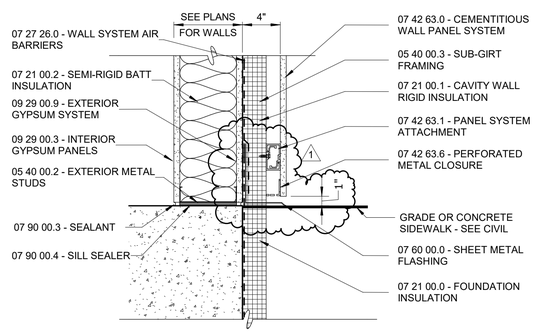

CEMENTITIOUS WALL PANEL SYSTEM AT STUD WALL - AT GRADE

DETAIL 10
1 1/2" = 1'-0" A-007

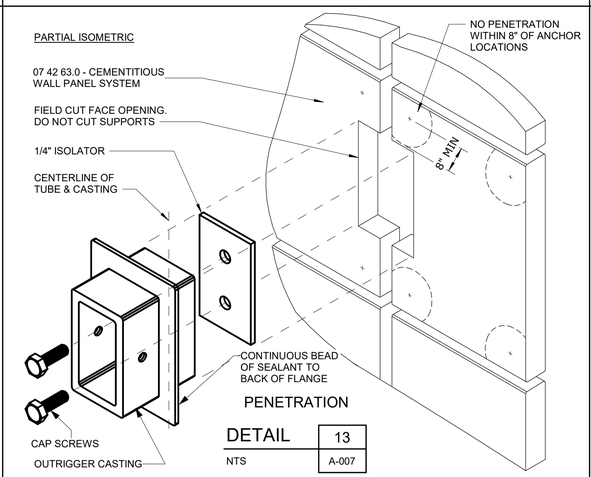

PENETRATION

DETAIL 13
NTS A-007

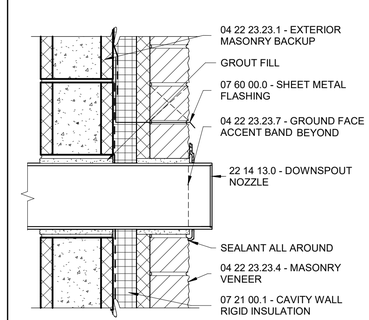

DOWNSPOUT NOZZLE AT MASONRY VENEER WALL

DETAIL 11
1 1/2" = 1'-0" A-007

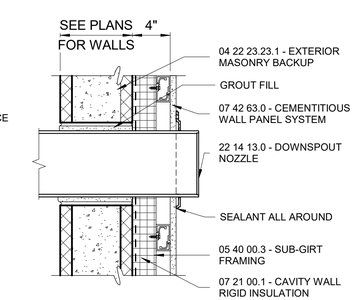

DOWNSPOUT NOZZLE AT UHPC WALL

DETAIL 12
1 1/2" = 1'-0" A-007

4" 0 1'
1 1/2" = 1'-0"

REV	ISSUED FOR	DATE	BY
1	ADDENDUM NO. 5	APRIL 24	MWM
0	ISSUED FOR BIDS	FEB 24	MWM

PROJECT ENGINEER:	K. BARRETT
DESIGNED BY:	J. WOJCIESKI
DRAWN BY:	M. TAWADROUS
CHECKED BY:	W. RUSSELL

IF THIS BAR DOES NOT MEASURE 1" THEN DRAWING IS NOT TO FULL SCALE 0 1/2" 1"

REGISTERED ARCHITECT ANTHONY STEVE LONG No. 30719 NEW YORK STATE COMMONWEALTH OF MASSACHUSETTS

Hazen

HAZEN AND SAWYER
100 GREAT MEADOW ROAD, SUITE 702
WETHERSFIELD, CT 06109

SPRINGFIELD WATER AND SEWER COMMISSION

WEST PARISH WATER TREATMENT PLANT

FILED SUB-BID

ARCHITECTURAL
EXTERIOR WALL DETAILS

DATE:	FEBRUARY 2024
HAZEN NO.:	90398-004
CONTRACT NO.:	24-51
DRAWING NUMBER:	A-007

Autodesk Docs://90398-004_West Parish Filter WTF/90398-004-Arch Schedules.rvt
4/18/2024 1:23:40 PM

DOOR SCHEDULE

	FRAME		DOOR						FIRE	GLAZING					
NO.	TYPE	MATL	TYPE	MATL	WIDTH	HEIGHT	THICKNESS	DETAIL	RATING	TYPE	SIZE	FINISH	HDW NO	THRESHOLD	REMARKS
1000 - ADMINSTRATION AREA															
1100	F-1	HM	NG	HM	3' - 0"	7' - 2"	1 3/4"	6/-A015	--	IG	6"x36"	PT	4-EL	6/A-013	
1101	F-1	HM	FRG	HM	3' - 0"	7' - 2"	1 3/4"	6/A-015	45 MIN	FRG	3"x33"	PT	3	6/A-013	
1101A	F-1	HM	FRG	HM	3' - 0"	7' - 2"	1 3/4"	7/A-015	45 MIN	FRG	3"x33"	PT	3	6/A-013	
1101B	F-1	HM	FRG	HM	3' - 0"	7' - 10"	1 3/4"	6/A-015	45 MIN	FRG	3"x33"	PT	3	6/A-013	
1103	F-1	HM	NG	HM	3' - 0"	7' - 2"	1 3/4"	6/A-015	--	TG	6"x36"	PT	9	6/A-013	
1200	MFR	AL	FG&FG	AL	6' - 0"	7' - 10"	2 1/4"	3/A-015	--	IG	24"x78"	MFR	1-EL	6/A-013	
1200A	MFR	AL	FG&FG	AL	6' - 0"	7' - 10"	1 3/4"	2/A-015	--	IG	24"x78"	MFR	1	6/A-013	SEE WINDOW SCHEDULE W114
1201	MFR	AL	FG&FG	AL	6' - 0"	7' - 10"	1 3/4"	7/A-015	--	TG	24"x78"	MFR	1	6/A-013	SEE WINDOW SCHEDULE W115
1202	MFR	AL	FG	AL	3' - 0"	7' - 10"	1 3/4"	9/A-015	--	TG	24"x78"	MFR	10	1/A-013	SEE WINDOW SCHEDULE W109
1202A	MFR	AL	FG	AL	3' - 0"	7' - 10"	2 1/4"	3/A-015	--	IG	24"x78"	MFR	4-EL	2/A-013	SEE WINDOW SCHEDULE W117
1202B	F-1	HM	NG	WD	3' - 0"	7' - 10"	1 3/4"	8/A-015	--	TG	6"x36"	MFR	10	1/A-013	
1203	F-1	HM	NG	WD	3' - 0"	7' - 10"	1 3/4"	8/A-015	--	TG	6"x36"	MFR	10	5/A-013	
1203A	MFR	AL	FG	AL	3' - 0"	7' - 10"	2 1/4"	3/A-015	--	IG	24"x78"	MFR	4-EL	2/A-013	SEE WINDOW SCHEDULE W117
1203B	F-1	HM	F	WD	3' - 0"	7' - 2"	1 3/4"	7/A-015	--	--	--	MFR	10	4/A-013	
1204	MFR	AL	F	WD	3' - 0"	7' - 10"	1 3/4"	9/A-015	--	--	--	MFR	11	1/A-013	SEE WINDOW SCHEDULE W111
1205	MFR	AL	F	WD	3' - 0"	7' - 10"	1 3/4"	9/A-015	--	--	--	MFR	11	1/A-013	SEE WINDOW SCHEDULE W110
1206	MFR	AL	F	WD	3' - 0"	7' - 10"	1 3/4"	9/A-015	--	--	--	MFR	11	1/A-013	SEE WINDOW SCHEDULE W110
1207	MFR	AL	FG	AL	3' - 0"	7' - 9"	2 1/4"	A-1709	--	IG	24"x78"	MFR	4-EL	2/A-013	
1207A	F-1	HM	NG	HM	3' - 0"	7' - 10"	1 3/4"	7/A-015	--	IG	6"x36"	PT	3	6/A-013	
1208	F-1	HM	F	WD	3' - 0"	7' - 10"	1 3/4"	8/A-015	--	--	--	MFR	9	3/A-013	
1209	F-1	HM	F	WD	3' - 0"	7' - 2"	1 3/4"	8/A-015	--	--	--	MFR	12	1/A-013	
1210	MFR	AL	FG	AL	3' - 0"	7' - 10"	1 3/4"	7/A-015	--	TG	24"x78"	MFR	10	3/A-013	SEE WINDOW SCHEDULE W109
1210A	MFR	AL	FG	AL	3' - 0"	7' - 10"	1 3/4"	7/A-015	--	TG	24"x78"	MFR	10	3/A-013	SEE WINDOW SCHEDULE W109
1211	F-1	HM	F	WD	3' - 0"	7' - 2"	1 3/4"	8/A-015	--	--	--	MFR	12	1/A-013	
1212	F-1	HM	F	WD	3' - 0"	7' - 2"	1 3/4"	8/A-015	--	--	--	MFR	12	1/A-013	
1213	F-1	HM	F	WD	3' - 0"	7' - 2"	1 3/4"	8/A-015	--	--	--	MFR	12	1/A-013	
1214	F-1	HM	F&F	HM	6' - 0"	7' - 10"	1 3/4"	7/A-015	--	--	--	PT	2	6/A-013	
1215	F-1	HM	NG	WD	3' - 0"	7' - 10"	1 3/4"	7/A-015	--	IG	6"x36"	MFR	3	3/A-013	
1215A	F-1	HM	FG&FG	WD	6' - 0"	7' - 10"	1 3/4"	8/A-015	--	TG	24"x78"	MFR	6	1/A-013	
1215B	F-1	HM	FG&FG	WD	6' - 0"	7' - 10"	1 3/4"	8/A-015	--	TG	24"x78"	MFR	6	1/A-013	
1215C	F-1	HM	NG	WD	3' - 0"	7' - 10"	1 3/4"	8/A-015	--	TG	6"x36"	MFR	10	1/A-013	
1216	F-1	HM	F	WD	3' - 0"	7' - 2"	1 3/4"	7/A-015	--	--	--	MFR	12	5/A-013	
1217	F-1	HM	FRG	HM	3' - 0"	7' - 2"	1 3/4"	7/A-015	45 MIN	FRG	3"x33"	PT	3	6/A-013	
1217A	MFR	AL	FG	AL	3' - 0"	7' - 9"	2 1/4"	A-1709	--	IG	24"x78"	MFR	4-EL	2/A-013	
1218	F-1	HM	F	HM	3' - 0"	7' - 2"	1 3/4"	7/A-015	45 MIN	--	--	PT	9	6/A-013	
1219	F-1	HM	F&F	HM	5' - 0"	7' - 10"	1 3/4"	8/A-015	--	--	--	PT	10	1/A-013	3'-0" ACTIVE LEAF - 2'-0" INACTIVE LEAF
1220	F-1	HM	NG	HM	3' - 0"	7' - 10"	1 3/4"	8/A-015	--	TG	6"x36"	PT	10	1/A-013	
1221	F-1	HM	FRG	HM	3' - 0"	7' - 10"	1 3/4"	7/A-015	45 MIN	FRG	3"x33"	PT	9-EL	6/A-013	
1221A	MFR	AL	FG&FG	AL	6' - 0"	7' - 10"	1 3/4"	9/A-015	--	TG	24"x78"	MFR	2-EL	3/A-013	SEE WINDOW SCHEDULE W119
1222	MFR	AL	FG	AL	3' - 0"	7' - 10"	1 3/4"	9/A-015	--	TG	24"x78"	MFR	11	1/A-013	SEE WINDOW SCHEDULE W116
1223	F-1	HM	F	WD	3' - 0"	7' - 2"	1 3/4"	8/A-015	--	--	--	MFR	12	1/A-013	
1224	F-1	HM	F	WD	3' - 0"	7' - 2"	1 3/4"	8/A-015	--	--	--	MFR	12	1/A-013	
1303	MFR	AL	F	WD	3' - 0"	7' - 10"	1 3/4"	9/A-015	--	--	--	MFR	10	1/A-013	SEE WINDOW SCHEDULE W111
1305	MFR	AL	F	WD	3' - 0"	7' - 10"	1 3/4"	9/A-015	--	--	--	MFR	11	5/A-013	SEE WINDOW SCHEDULE W109
1306	MFR	AL	F	WD	3' - 0"	7' - 10"	1 3/4"	9/A-015	--	--	--	MFR	11	5/A-013	SEE WINDOW SCHEDULE W111
1307	MFR	AL	F	WD	3' - 0"	7' - 10"	1 3/4"	9/A-015	--	--	--	MFR	11	5/A-013	SEE WINDOW SCHEDULE W111
1308	MFR	AL	F	WD	3' - 0"	7' - 10"	1 3/4"	9/A-015	--	--	--	MFR	11	5/A-013	SEE WINDOW SCHEDULE W109
1309	F-1	HM	F	WD	3' - 0"	7' - 10"	1 3/4"	8/A-015	--	--	--	MFR	9	3/A-013	
1310	F-1	HM	F	WD	3' - 0"	7' - 10"	1 3/4"	8/A-015	--	--	--	MFR	9	3/A-013	
1311	F-1	HM	FL	WD	3' - 0"	7' - 10"	1 3/4"	8/A-015	--	--	--	MFR	9	3/A-013	
1313	F-1	HM	F	WD	3' - 0"	7' - 10"	1 3/4"	8/A-015	--	--	--	MFR	10	1/A-013	
1314	F-1	HM	F	WD	3' - 0"	7' - 10"	1 3/4"	8/A-015	--	--	--	MFR	10	1/A-013	
1315	F-1	HM	F	WD	3' - 0"	7' - 10"	1 3/4"	8/A-015	--	--	--	MFR	10	1/A-013	
1316	F-1	HM	F	WD	3' - 0"	7' - 10"	1 3/4"	8/A-015	--	--	--	MFR	12	3/A-013	
1317	F-1	HM	F	WD	3' - 0"	7' - 10"	1 3/4"	8/A-015	--	--	--	MFR	5-EL	3/A-013	
1318	F-1	HM	F	WD	3' - 0"	7' - 10"	1 3/4"	8/A-015	--	--	--	MFR	12	5/A-013	
1319	MFR	AL	F	WD	3' - 0"	7' - 10"	1 3/4"	9/A-015	--	--	--	MFR	10	5/A-013	SEE WINDOW SCHEDULE W113
1320	F-1	HM	F	WD	3' - 0"	7' - 10"	1 3/4"	7/A-015	--	--	--	MFR	5-EL	6/A-013	
1321	MFR	AL	FG&FG	AL	6' - 0"	7' - 10"	1 3/4"	7/A-015	--	TG	24"x78"	MFR	1-EL	6/A-013	SEE WINDOW SCHEDULE W115
1323	F-1	HM	F	WD	3' - 0"	7' - 10"	1 3/4"	8/A-015	--	--	--	MFR	7-EL	6/A-013	
1324	F-1	HM	NG	WD	3' - 0"	7' - 10"	1 3/4"	8/A-015	--	TG	6"x36"	MFR	9-EL	5/A-013	
1324A	F-1	HM	NG	WD	3' - 0"	7' - 10"	1 3/4"	8/A-015	--	TG	6"x36"	MFR	9-EL	5/A-013	
1324B	F-1	HM	NG	HM	3' - 0"	7' - 2"	1 3/4"	7/A-015	--	TG	6"x36"	PT	9-EL	2/A-013	
1325	F-1	HM	F&F	WD	8' - 0"	7' - 10"	1 3/4"	8/A-015	--	--	--	MFR	10	3/A-013	
1326	MFR	AL	F	WD	3' - 0"	7' - 10"	1 3/4"	9/A-015	--	--	--	MFR	11	5/A-013	SEE WINDOW SCHEDULE W110
1327	MFR	AL	F	WD	3' - 0"	7' - 10"	1 3/4"	9/A-015	--	--	--	MFR	11	5/A-013	SEE WINDOW SCHEDULE W109
1328	MFR	AL	F	WD	3' - 0"	7' - 10"	1 3/4"	9/A-015	--	--	--	MFR	11	5/A-013	SEE WINDOW SCHEDULE W112
1329	MFR	AL	F	WD	3' - 0"	7' - 10"	1 3/4"	9/A-015	--	--	--	MFR	11	5/A-013	SEE WINDOW SCHEDULE W111
1330	MFR	AL	F	WD	3' - 0"	7' - 10"	1 3/4"	9/A-015	--	--	--	MFR	11	5/A-013	SEE WINDOW SCHEDULE W111
1331	MFR	AL	F	WD	3' - 0"	7' - 10"	1 3/4"	9/A-015	--	--	--	MFR	11	5/A-013	SEE WINDOW SCHEDULE W111
1332	F-1	HM	F	WD	2' - 0"	7' - 2"	1 3/4"	8/A-015	--	--	--	MFR	10	1/A-013	

DOOR SCHEDULE

	FRAME		DOOR						FIRE	GLAZING					
NO.	TYPE	MATL	TYPE	MATL	WIDTH	HEIGHT	THICKNESS	DETAIL	RATING	TYPE	SIZE	FINISH	HDW NO	THRESHOLD	REMARKS
2000 - TREATMENT AREA															
2102	F-1	HM	F&F	HM	6' - 0"	7' - 2"	1 3/4"	6/A-015	--	--	--	PT	2	1/A-013	
2200	F-1	HM	F	HM	3' - 0"	7' - 2"	1 3/4"	2/A-015	--	--	--	PT	4-EL	2/A-013	
2200A	F-1	HM	FRG	HM	3' - 0"	7' - 2"	1 3/4"	6/A-015	45 MIN	FRG	3"x33"	PT	3	6/A-013	
2202	F-2	HM	F	HM	3' - 0"	7' - 2"	1 3/4"	2/A-015	--		--	PT	4-EL	2/A-013	
2202A	MFR	STL	OH	STL	12' - 0"	12' - 0"	3/4"	5/A-015	--	--	--	MFR	--	--	
2202B	F-1	HM	F&F	HM	6' - 0"	7' - 2"	1 3/4"	6/A-015	--		--	PT	6	1/A-013	
2203	F-2	HM	F&F	HM	6' - 0"	7' - 2"	1 3/4"	2/A-015	--	--	--	PT	1-EL	2/A-013	REMOVABLE TRANSOM
2203A	F-1	HM	F	HM	3' - 0"	7' - 2"	1 3/4"	6/A-015	90 MIN	--	--	PT	5-EL	6/A-013	
2204	F-1	HM	F	HM	3' - 0"	7' - 2"	1 3/4"	1/A-015	--	--	--	PT	4-EL	2/A-013	
2204A	F-1	HM	FRG	HM	3' - 0"	7' - 2"	1 3/4"	6/A-015	45 MIN	FRG	3"x33"	PT	3	6/A-013	
2204B	F-1	HM	FRG	HM	3' - 0"	7' - 2"	1 3/4"	6/A-015	45 MIN	FRG	3"x33"	PT	3	6/A-013	
2204C	F-1	HM	F	HM	3' - 0"	7' - 2"	1 3/4"	2/A-015	--	--	--	PT	8-EL	7/A-013	
2205	F-1	HM	F	HM	3' - 0"	7' - 2"	1 3/4"	6/A-015	--	--	--	PT	12	3/A-013	
2206	F-1	HM	FL	HM	3' - 0"	7' - 2"	1 3/4"	6/A-015	--	--	--	PT	9	6/A-013	
2207	F-1	HM	F	HM	3' - 0"	7' - 2"	1 3/4"	6/A-015	--	--	--	PT	9	6/A-013	
2208	MFR	STL	OH	STL	12' - 0"	14' - 0"	3/4"	4/A-015	--	--	--	MFR	--	--	
2208A	F-1	HM	NG	HM	3' - 0"	7' - 2"	1 3/4"	1/A-015	--	IG	6"x36"	PT	4-EL	2/A-013	
2209	F-1	FRP	FRG&FRG	FRP	6' - 0"	7' - 2"	1 3/4"	6/A-015	90 MIN	FRG	3"x33"	MFR	6	6/A-013	
2209A	MFR	STL	OH	STL	12' - 0"	14' - 0"	3/4"	4/A-015	--	--	--	MFR	--	--	
2209B	F-1	FRP	NG	FRP	3' - 0"	7' - 2"	1 3/4"	3/A-015	--	IG	6"x36"	MFR	4-EL	2/A-013	
2209C	F-1	FRP	FRG	FRP	3' - 0"	7' - 2"	1 3/4"	6/A-015	45 MIN	FRG	3"x33"	MFR	3	6/A-013	
2210	F-1	FRP	FRG&FRG	FRP	6' - 0"	7' - 2"	1 3/4"	6/A-015	45 MIN	FRG	3"x33"	MFR	6	6/A-013	
2210A	F-1	FRP	FRG	FRP	3' - 0"	7' - 2"	1 3/4"	6/A-015	45 MIN	FRG	3"x33"	MFR	3	6/A-013	
2211	F-1	FRP	FRG	FRP	3' - 0"	7' - 2"	1 3/4"	6/A-015	45 MIN	FRG	3"x33"	MFR	3	6/A-013	
2211A	F-1	FRP	FRG&FRG	FRP	6' - 0"	7' - 2"	1 3/4"	6/A-015	45 MIN	FRG	3"x33"	MFR	6	6/A-013	
2212	F-1	FRP	FRG	FRP	3' - 0"	7' - 2"	1 3/4"	6/A-015	45 MIN	FRG	3"x33"	MFR	3	6/A-013	
2213	F-1	FRP	FRG&FRG	FRP	6' - 0"	7' - 2"	1 3/4"	6/A-015	45 MIN	FRG	3"x33"	MFR	6	6/A-013	
2214	F-1	FRP	FRG&FRG	FRP	6' - 0"	7' - 2"	1 3/4"	6/A-015	45 MIN	FRG	3"x33"	MFR	6	6/A-013	
2215	F-1	FRP	FRG&FRG	FRP	6' - 0"	7' - 2"	1 3/4"	6/A-015	45 MIN	FRG	3"x33"	MFR	6	6/A-013	
2216	F-1	FRP	FRG&FRG	FRP	6' - 0"	7' - 2"	1 3/4"	6/A-015	45 MIN	FRG	3"x33"	MFR	6	6/A-013	
2219	F-1	HM	F&F	HM	6' - 0"	7' - 2"	1 3/4"	1/A-015	--		--	PT	1-EL	2/A-013	
2220	F-1	HM	NG	HM	3' - 0"	7' - 2"	1 3/4"	1/A-015	--	IG	6"x36"	PT	4-EL	2/A-013	
2220A	F-1	HM	FRG	HM	3' - 0"	7' - 2"	1 3/4"	6/A-015	45 MIN	FRG	3"x33"	PT	3	6/A-013	
2220B	F-1	HM	FRG	HM	3' - 0"	7' - 2"	1 3/4"	6/A-015	45 MIN	FRG	3"x33"	PT	3	6/A-013	
2221	F-1	HM	FRG	HM	3' - 0"	7' - 2"	1 3/4"	6/A-015	45 MIN	FRG	3"x33"	PT	3	6/A-013	
2300	F-1	HM	F	HM	3' - 0"	7' - 2"	1 3/4"	1/A-015	--	--	--	PT	8-EL	7/A-013	
2301	MFR	AL	FG&FG	AL	6' - 0"	7' - 2"	1 3/4"	6/A-015		TG	24"x70"	MFR	2	6/A-013	
2301A	MFR	AL	FG&FG	AL	6' - 0"	7' - 2"	1 3/4"	6/A-015		TG	24"x70"	MFR	2	6/A-013	
2301B	MFR	AL	FG&FG	AL	6' - 0"	7' - 2"	1 3/4"	6/A-015		TG	24"x70"	MFR	2	6/A-013	
2301C	MFR	AL	FG&FG	AL	6' - 0"	7' - 2"	1 3/4"	6/A-015		TG	24"x70"	MFR	2	6/A-013	
2301D	MFR	AL	FG&FG	AL	6' - 0"	7' - 2"	1 3/4"	6/A-015		TG	24"x70"	MFR	2	6/A-013	
2302	MFR	AL	FG&FG	AL	6' - 0"	7' - 2"	1 3/4"	6/A-015	--	TG	24"x70"	MFR	2	6/A-015	SEE WINDOW SCHEDULE W212
2302A	F-1	HM	F	HM	3' - 0"	7' - 2"	1 3/4"	1/A-015	--	--	--	PT	8-EL	7/A-013	
2303	F-2	HM	F&F	HM	6' - 0"	7' - 2"	1 3/4"	6/A-015	90 MIN	--	--	PT	6-EL	6/A-013	REMOVABLE TRANSOM
2303A	F-1	HM	F	HM	3' - 0"	7' - 2"	1 3/4"	6/A-015	90 MIN	--	--	PT	5-EL	6/A-013	
3000 - DEWATERING BUILDING															
3101	F-1	HM	FRG	HM	3' - 0"	7' - 2"	1 3/4"	6/A-015	45 MIN	FRG	3"x33"	PT	3	6/A-013	
3101A	F-1	HM	FRG	HM	3' - 0"	7' - 2"	1 3/4"	6/A-015	45 MIN	FRG	3"x33"	PT	3	6/A-013	
3101B	F-1	HM	F	HM	3' - 0"	7' - 10"	1 3/4"	2/A-015	--	--	--	PT	4-EL	2/A-013	
3101C	F-1	HM	FRG	HM	3' - 0"	7' - 2"	1 3/4"	6/A-015	45 MIN	FRG	3"x33"	PT	3	6/A-013	
3101D	F-1	HM	NG	HM	3' - 0"	7' - 2"	1 3/4"	1/A-015	--	IG	6"x36"	PT	8-EL	7/A-013	
3200	F-1	HM	F&F	HM	6' - 0"	7' - 10"	1 3/4"	2/A-015		--	---	PT	1-EL	2/A-013	
3200A	MFR	STL	OH	STL	14' - 0"	14' - 0"	3/4"	5/A-015	--	--	--	MFR	--	--	
3200B	MFR	STL	OH	STL	14' - 0"	14' - 0"	3/4"	5/A-015	--	--	--	MFR	--	--	
3201	F-1	HM	NG	HM	3' - 0"	7' - 2"	1 3/4"	6/A-015	--	TG	3"x33"	PT	3	6/A-013	
3201A	F-1	HM	F&F	HM	6' - 0"	7' - 10"	1 3/4"	2/A-015		---	---	PT	1-EL	2/A-013	
3201B	F-1	HM	NG&NG	HM	6' - 0"	7' - 10"	1 3/4"	6/A-015	--	TG	6"x36"	PT	2	6/A-013	
3300	F-1	HM	F&F	HM	6' - 0"	7' - 10"	1 3/4"	1/A-015		--	---	PT	1-EL	2/A-013	
3301	F-1	HM	F&F	HM	6' - 0"	7' - 10"	1 3/4"	6/A-015	90 MIN	--	---	PT	6-EL	6/A-013	
3301A	F-1	HM	F	HM	3' - 0"	7' - 2"	1 3/4"	6/A-015	90 MIN	--	--	PT	5-EL	6/A-013	
3302	F-1	HM	NG	HM	3' - 0"	7' - 2"	1 3/4"	6/A-015	--	TG	6"x36"	PT	9-EL	3/A-013	
3303	F-1	HM	F	HM	3' - 0"	7' - 2"	1 3/4"	6/A-015	--	--	--	PT	12	3/A-013	
3304	F-1	HM	F	HM	3' - 0"	7' - 2"	1 3/4"	6/A-015	--	--	--	PT	9-EL	1/A-013	
3305	F-1	HM	NG	HM	3' - 0"	7' - 2"	1 3/4"	6/A-015	--	TG	6"x36"	PT	9	3/A-013	
3306	F-1	HM	FL	HM	3' - 0"	7' - 2"	1 3/4"	6/A-015	--	--	--	PT	9	6/A-013	

DOOR LEGEND

AL	ALUMINUM 08 33 23, 08 41 13, 08 44 13	HM	HOLLOW METAL 08 11 13	MFR	MANUFACTURER	TG	TEMPERED GLASS
FRG	FIRE GLASS	IG	INSULATING GLAZING 08 81 03	PT	PAINT 09 90 00	WD	WOOD 08 14 00
FRP	FIBERGLASS REINFORCED PLASTIC 08 15 00	LSG	LAMINATED SAFETY GLASS 08 81 03	STL	STEEL		

FRAME TYPES 1/4" = 1'-0"

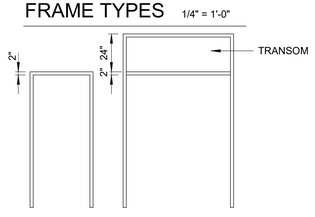

F-1 F-2

DOOR TYPES 1/4" = 1'-0"

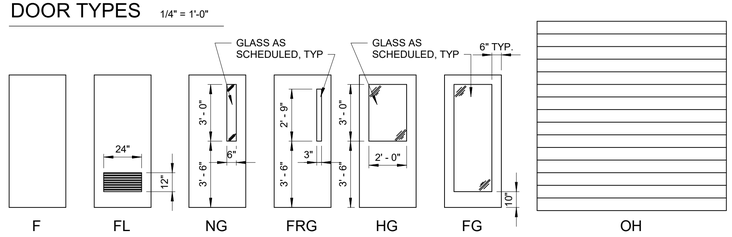

F FL NG FRG HG FG OH

FRAME PROFILES 3" = 1'-0"

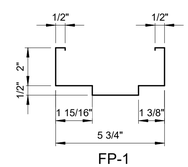

FP-1

3" = 1'-0" 2" 0 2 4 6"

1/4" = 1'-0" 1 0 1 2 3 7'

REV	ISSUED FOR	DATE	BY
2	ADDENDUM NO. 5	APRIL 24	MWM
1	ADDENDUM NO. 4	APRIL 24	MWM
0	ISSUED FOR BIDS	FEB 24	MWM

PROJECT ENGINEER: K. BARRETT
DESIGNED BY: J. WOJCIESKI
DRAWN BY: M. TAWADROUS
CHECKED BY: W. RUSSELL

IF THIS BAR DOES NOT MEASURE 1" THEN DRAWING IS NOT TO FULL SCALE 0 1/2" 1"

REGISTERED ARCHITECT ANTHONY STALLONE No. 30719 NEW YORK STATE COMMONWEALTH OF MASSACHUSETTS

Hazen

HAZEN AND SAWYER
100 GREAT MEADOW ROAD, SUITE 702
WETHERSFIELD, CT 06109

SPRINGFIELD WATER AND SEWER COMMISSION

WEST PARISH WATER TREATMENT PLANT

FILED SUB-BID

ARCHITECTURAL DOOR SCHEDULE

DATE: FEBRUARY 2024
HAZEN NO.: 90398-004
CONTRACT NO.: 24-51
DRAWING NUMBER: A-014

Autodesk Docs://90398-004_West Parish Filter WTF/90398-004-Arch Schedules.rvt
4/18/2024 10:56:26 AM

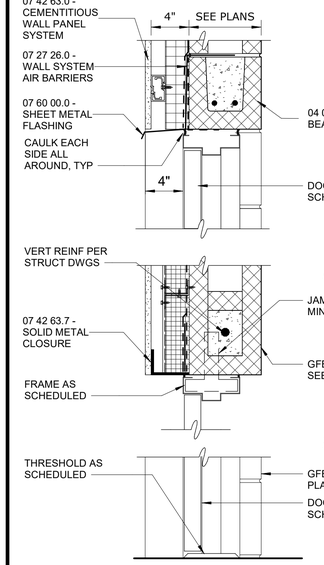

EXTERIOR DOOR IN MASONRY WALL - CEMENTITIOUS WALL PANEL

DETAIL	1
1 1/2" = 1'-0"	A-015

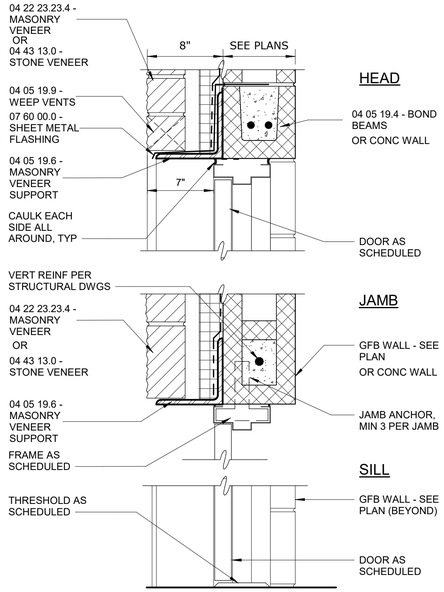

EXTERIOR DOOR IN MASONRY WALL - MASONRY OR STONE VENEER

DETAIL	2
1 1/2" = 1'-0"	A-015

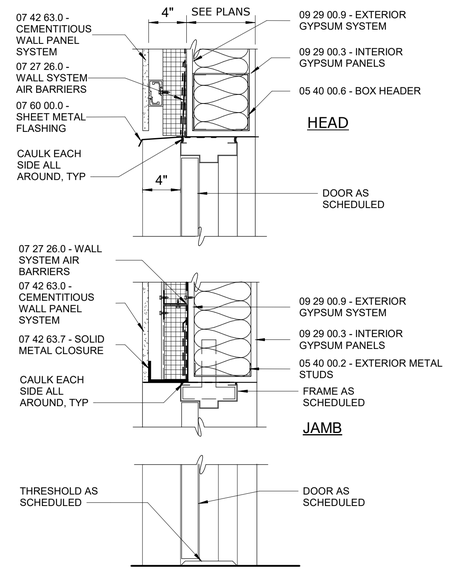

EXTERIOR DOOR IN STUD WALL - CEMENTITIOUS WALL PANEL

DETAIL	3
1 1/2" = 1'-0"	A-015

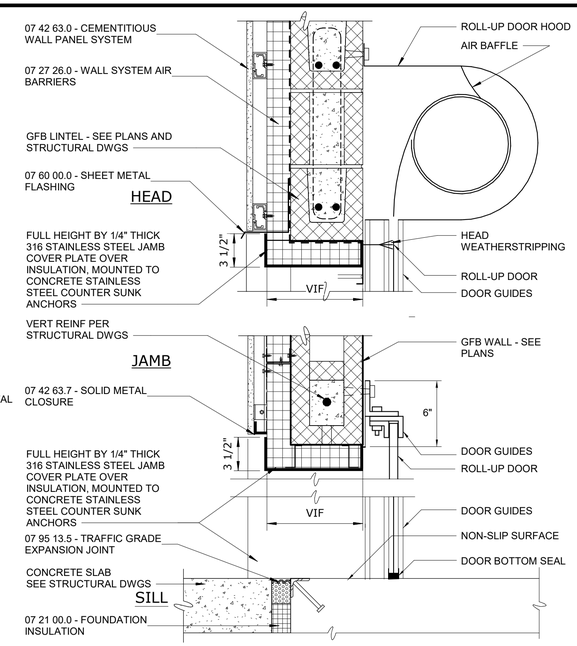

ROLL-UP DOOR IN MASONRY WALL - CEMENTITIOUS WALL PANEL

DETAIL	4
1 1/2" = 1'-0"	A-015

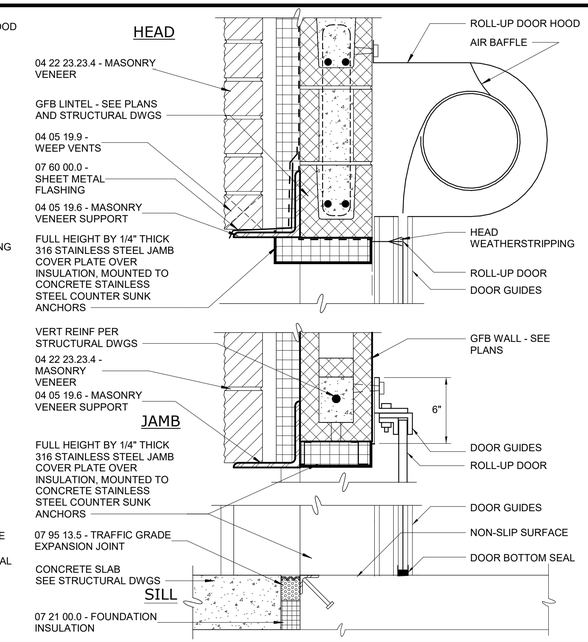

ROLL-UP DOOR IN MASONRY WALL - MASONRY VENEER

DETAIL	5
1 1/2" = 1'-0"	A-015

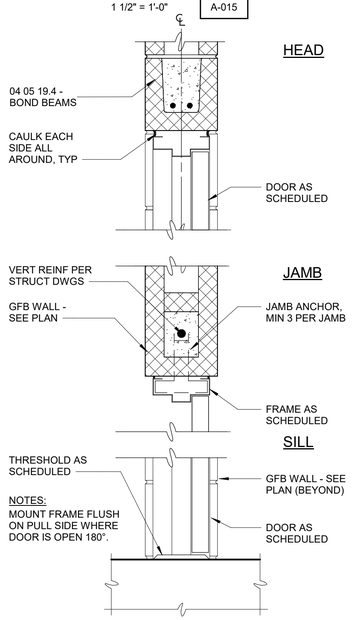

INTERIOR DOOR IN MASONRY

DETAIL	6
1 1/2" = 1'-0"	A-015

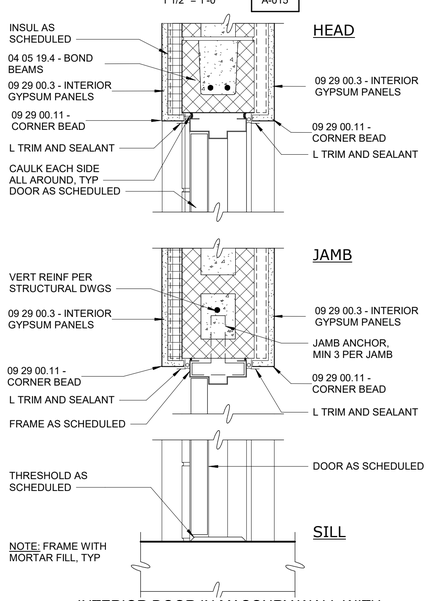

INTERIOR DOOR IN MASONRY WALL WITH FURRING

DETAIL	7
1 1/2" = 1'-0"	A-015

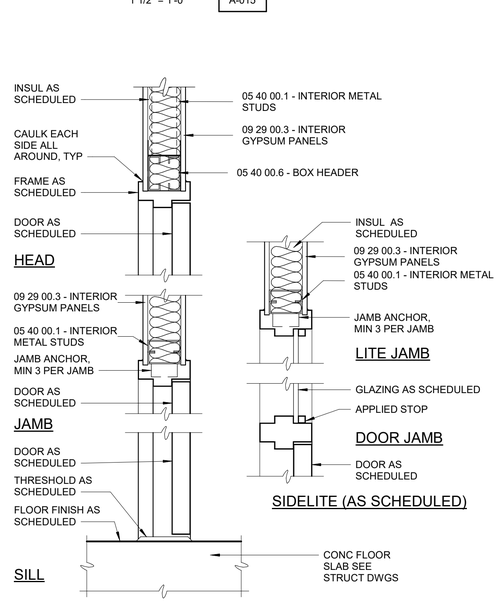

INTERIOR DOOR IN METAL STUD WALL

DETAIL	8
1 1/2" = 1'-0"	A-015

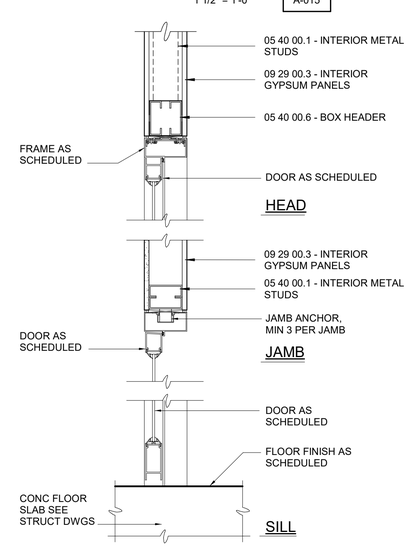

INTERIOR DOOR (STOREFRONT) IN METAL STUD WALL

DETAIL	9
1 1/2" = 1'-0"	A-015

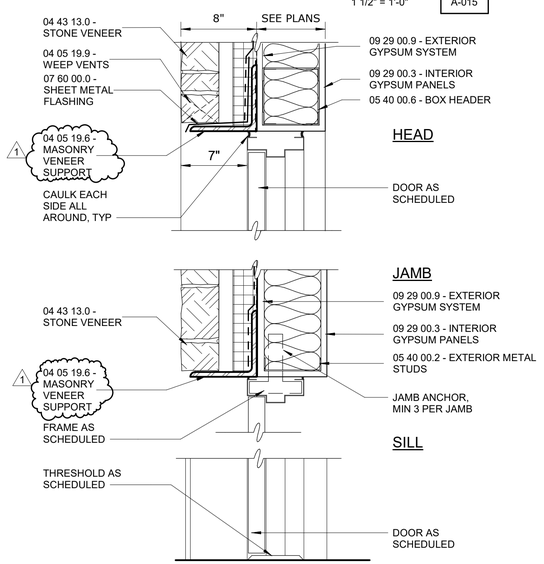

EXTERIOR DOOR IN STUD WALL - STONE VENEER

DETAIL	10
1 1/2" = 1'-0"	A-015

1 1/2" = 1'-0" 4" 0 1'

REV	ISSUED FOR	DATE	BY
1	ADDENDUM NO. 5	APRIL 24	MWM
0	ISSUED FOR BIDS	FEB 24	MWM

PROJECT ENGINEER:	K. BARRETT
DESIGNED BY:	J. WOJCIESKI
DRAWN BY:	M. TAWADROUS
CHECKED BY:	W. RUSSELL

IF THIS BAR DOES NOT MEASURE 1" THEN DRAWING IS NOT TO FULL SCALE 0 1/2" 1"

REGISTERED ARCHITECT ANTHONY STAVONE No. 30719 NEW YORK STATE COMMONWEALTH OF MASSACHUSETTS

Hazen

HAZEN AND SAWYER
100 GREAT MEADOW ROAD, SUITE 702
WETHERSFIELD, CT 06109

SPRINGFIELD WATER AND SEWER COMMISSION

WEST PARISH WATER TREATMENT PLANT

FILED SUB-BID

ARCHITECTURAL DOOR DETAILS

DATE:	FEBRUARY 2024
HAZEN NO.:	90398-004
CONTRACT NO.:	24-51
DRAWING NUMBER:	A-015

Autodesk Docs://90398-004_West Parish Filter WTF/90398-004-Arch Schedules.rvt
4/18/2024 5:07:42 PM

BUILDING CODE ANALYSIS
MASSACHUSETTS STATE BUILDING CODE
TENTH EDITION CMR 780

NS=Non-sprinklered, S=Sprinklered, S1=Sprinklered maximum one story above grade plane, SM=Sprinklered two or more stories above grade plane, HR=hours, OL=Occupant Load, Max=Maximum, Min=Minimum, NA=Not Applicable, M.G.L.= Massachusetts General Law

CODE ITEM	CODE REFERENCE	PROPOSED WATER TREATMENT PLANT	
OCCUPANCY CLASSIFICATION AND USE	CH 3	PROPOSED CLASSIFICATION AND USE	
	SECTION 304 BUSINESS GROUP B	GROUP B ADMINISTRATIVE OFFICES	
	SECTION 306 FACTORY INDUSTRIAL GROUP F	GROUP F-1 PROCESS AND PROCESS OPERATIONS, ACCESSORY USE	
	SECTION 307 HIGH-HAZARD GROUP H	GROUP H-4 CHEMICAL STORAGE	
	SECTION 312 UTILITY AND MISC GROUP U	GROUP U TANKS	
CONSTRUCTION TYPE	CH 6 TABLE 601	**IIB**	
BUILDING HEIGHT	CH 5 TABLE 504.3 ALLOWABLE BUILDING HEIGHT IN FEET ABOVE GRADE PLANE	ALLOWED	PROPOSED
	GROUP B, F-1, U	75'-0" (S)	**47'-0" (S)**
	GROUP H-4	75'-0" (S)	**22'-0" (S)**
BUILDING HEIGHT (STORIES)	CH 5 TABLE 504.4 ALLOWABLE NUMBER OF STORIES ABOVE GRADE PLANE	ALLOWED	PROPOSED
	GROUP B	4 (S)	**2 (S)**
	GROUP F-1	3 (S)	**2 (S)**
	GROUP H-4	4 (S)	**1 (S)**
	GROUP U	3 (NS)	**1 (NS)**
BUILDING AREA	CH 5 TABLE 506.2 ALLOWABLE AREA FACTOR	ALLOWED	PROPOSED
	GROUP H-4	70,000 SF (S1)	**14,686 SF (S1)**
	GROUP U	8,500 SF (NS)	**35,584 SF (NS)**
	SECTION 507.5 - TWO STORY BUILDINGS	ALLOWED	PROPOSED
	GROUP B	UNLIMITED (SM)	**22,443 SF (SM)**
	GROUP F-1	UNLIMITED (SM)	**55,293 SF (SM)**

FIRE RESISTANCE RATING REQUIREMENTS

CONSTRUCTION CLASSIFICATION	CH 6 TABLE 601 FIRE RESISTANCE RATINGS	RATING	
		REQUIRED	PROPOSED
PRIMARY STRUCTURAL FRAME	TYPE IIB	0HR	**0HR**
BEARING WALLS (EXTERIOR AND INTERIOR)	TYPE IIB	0HR	**0HR**
NONBEARING WALLS (INTERIOR)	TYPE IIB	0HR	**0HR**
FLOOR CONSTRUCTION	TYPE IIB	0HR	**0HR**
ROOF CONSTRUCTION	TYPE IIB	0HR	**0HR**
EXTERIOR WALL	CH 6 TABLE 602 FIRE RESISTANCE RATINGS BASED ON FIRE SEPARATION DISTANCE (FT)	REQUIRED	PROPOSED
	GROUP H: X > 30'	0 HR	**0HR**
	GROUP F-1, U: X > 30'	0 HR	**0HR**
OPENING PROTECTIVES	CH 7 TABLE 716.1 OPENING FIRE PROTECTION ASSEMBLIES, RATINGS AND MARKINGS	YES - DOORS AT FIRE RATED WALLS	YES
		NO - WINDOW ASSEMBLY	NO
SEPARATION OF OCCUPANCIES	CH 5 TABLE 508.4 SEPARATION BETWEEN OCCUPANCIES	REQUIRED	PROPOSED
	F-1 (S) AND H-4 (S), U (NS)	2 HR	2 HR
	F-1 (S) AND B (S)	0 HR	0 HR
	F-1 (S), B (S) AND U (NS)	2 HR	2 HR
PARAPETS	CH 7 SECTION 705.11	REQUIRED	PROPOSED
	AT EXTERIOR WALLS REQUIRED TO BE FIRE RATED	YES	NA
	AT EXTERIOR WALLS NOT REQUIRED TO BE FIRE RATED	NO	NO

CALCULATED OCCUPANT LOAD

USE GROUP OR SPACE DESCRIPTION	(a) AREA (SF)	(b) LOAD FACTOR CH 10 TABLE 1004.5	(a/b) OCCUPANT LOAD
F-1	48,877 SF	300 GROSS	163
B BUSINESS	19,066 SF	150 GROSS	128
F-1 ACCESSORY LOCKERS	520 SF	50 GROSS	11
A-3 ACCESSORY TRAINING ROOM	935 SF	50 NET	19
H-4	14,183 SF	300 GROSS	48
U	NA	NA	NA
		TOTAL OCCUPANT LOAD	369

EGRESS REQUIREMENTS

		REQUIRED	PROPOSED
STAIRWAYS	CH 10 1011.2 STAIRWAYS WIDTH AND CAPACITY	44" MIN. 36" IF OL < 50	**44" MIN. MAX OL = 92**
DOORS	CH 10 1010.1.1 MINIMUM CLEAR OPENING WIDTH	32" MIN.	**32" MIN.**
COMMON PATH OF EGRESS TRAVEL	CH 10 TABLE 1006.2.1 SPACES WITH ONE EXIT OR EXIT ACCESS DOORWAY	ALLOWED	PROPOSED
	OCCUPANCY F (S)	100'-0" MAX OL = 49 MAX	**SEE PLAN MAX OL = 2**
	OCCUPANCY B (S)	100'-0" MAX OL = 49 MAX	**SEE PLAN MAX OL = 16**
	OCCUPANCY H-4 (S)	75'-0" MAX OL = 10	**SEE PLAN MAX OL = 8**
EGRESS FROM STORIES	CH10 TABLE 1006.3.3 (2) STORIES WITH ACCESS TO ONE EXIT	ALLOWED	PROPOSED
	OCCUPANCY F-1 (S)	100'-0" MAX OL <49	**SEE PLAN OL = 2 MAX**
EXIT ACCESS	CH 10 1007.1.1 (2) SEPARATION DISTANCE 1/3 MAX OVERALL DIMENSION OF BUILDING OR AREA SERVED	205'-6" / 3 = 68'-6" MIN	**SEE PLAN**
DOORS	CH 10 1010.1.1 SIZE OF DOORS	REQUIRED	PROPOSED
		32" MIN	**36" MIN**
CORRIDOR	TABLE 1020.2 ANY FACILITY	44" MIN	**44" MIN**
DEAD ENDS	CH 10 1020.4 DEAD ENDS EXCEPTION 2	50'-0" MAX (S) GROUPS B, F	**SEE PLAN**
HANDRAIL	CH 10 1014.2. HANDRAIL HEIGHT	34" MIN 38" MAX	**34" MIN 38" MAX**
GUARDRAIL	CH 10 1015.3 GUARDRAIL HEIGHT	42" MIN	**42" MIN**
EXIT ACCESS TRAVEL DISTANCE	CH 10 TABLE 1017.2	ALLOWED	PROPOSED
	OCCUPANCY B (S)	300'-0"	**SEE PLAN**
	OCCUPANCY F-1 (S)	250'-0"	**SEE PLAN**
	OCCUPANCY H-4 (S)	175'-0"	**SEE PLAN**

LIFE SAFETY SYSTEM REQUIREMENTS

		REQUIRED	PROPOSED
EMERGENCY LIGHTING	CH 10 SECTION 1008	YES	YES
EXIT SIGNS	CH 10 SECTION 1013	YES	YES
AUTOMATIC SPRINKLERS	CH 9 TABLE 903.2 GROUP B	YES	YES
	CH 9 TABLE 903.2 GROUP F-1	YES	YES
	CH 9 TABLE 903.2 GROUP H-4	YES	YES
	524 CMR 35 SECTION 2.8.3.3 SPRINKLERS SHALL NOT BE PERMITTED IN POWER PASSENGER ELEVATOR HOISTWAYS, PITS, MACHINE ROOMS OR CONTROL SPACES.	NO NOT PERMITTED	NO
	NFPA 13 9.2.6 SPRINKLERS SHALL NOT BE REQUIRED IN ELECTRICAL EQUIPMENT ROOMS WHERE ALL OF THE FOLLOWING CONDITIONS ARE MET: 1. THE ROOM IS DEDICATED TO ELECTRICAL EQUIPMENT ONLY. 2. ONLY DRY-TYPE OR LIQUID-TYPE WITH LISTED K-CLASS FLUID ELECTRICAL EQUIPMENT IS USED. 3. EQUIPMENT IS INSTALLED IN A 2-HOUR FIRE-RATED ENCLOSURE INCLUDING PROTECTION FOR PENETRATIONS. 4. STORAGE IS NOT PERMITTED IN THE ROOM.	NO EXEMPT	NO ALL CONDITIONS MET
PORTABLE FIRE EXTINGUISHER	CH 9 SECTION 906	YES (TYPE ABC)	YES (TYPE ABC)
FIRE ALARM	CH 9 SECTION 907.2.2 GROUP B	YES	YES
	CH 9 SECTION 907.2.4 GROUP F	YES	YES
	CH 9 SECTION 907.2.5 GROUP H	YES	YES
PANIC HARDWARE	CH10 SECTION 1010.1.10	YES	YES

STRUCTURAL AND SEISMIC DESIGN LOADS

SEE STRUCTURAL DRAWINGS

ACCESSIBILITY

MASSACHUSETTS STATE BUILDING CODE, 10TH EDITION

CHAPTER 11, SECTION 1100.1 SCOPE

PUBLIC BUILDINGS SHALL BE DESIGNED TO BE ACCESSIBLE AND CONFORM TO REQUIREMENTS OF 521 CMR: THE ARCHITECTURAL ACCESS BOARD

521 CMR: THE ARCHITECTURAL ACCESS BOARD

	REQUIRED	PROPOSED
SECTION 3.2 NEW CONSTRUCTION, PUBLIC BUILDINGS SECTION 3.6 MULTIPLE USES	YES, AT GROUP B OCCUPANCY	**YES, AT GROUP B**
SECTION 3.12 NON-OCCUPIABLE SPACES	NO	**NO**

ENERGY CODE REQUIREMENTS – WATER TREATMENT PLANT
IECC 2021 with MASSACHUSETTS AMENDMENTS + STRETCH ENERGY CODE AMENDMENTS + ASHRAE 90.1 – 2019 APPENDIX G

PROVIDE BUILDING THERMAL ENVELOPE TESTING IN ACCORDANCE WITH SECTION 01 91 00 – BUILDING SYSTEMS COMMISSIONING

WESTFIELD, MA	**CLIMATE ZONE**	**5A**					
BUILDING ENVELOPE REQUIREMENTS	225 CMR 23.00 TABLE C402.1.4 OPAQUE THERMAL ENVELOPE	REQUIRED			PROPOSED		
		ASSEMBLY MAX. U-VALUE	INSULATION MIN. R-VALUE		ASSEMBLY MAX. U-VALUE	INSULATION MIN. R-VALUE	
ROOF	INSULATED ENTIRELY ABOVE ROOF DECK	U-0.032	R-30 c.i.		**U-0.032**	**R-30 c.i.**	
WALLS, ABOVE GRADE	MASS	U-0.090	R-11.4 c.i.		**U-0.090**	**R-12.5 c.i.**	
	STEEL-FRAMED	U-0.55	R-13 + R-10 c.i.		**U-0.55**	**R-24 + R-12.5 c.i.**	
WALLS, BELOW GRADE	BELOW-GRADE WALL	C-0.119 FOR 10 FT BELOW GRADE	R-7.5 c.i.		**C-0.119 FOR 10 FT BELOW GRADE**	**R-15 c.i.**	
SLAB ON GRADE	UNHEATED SLAB	F-0.520 FOR 24" BELOW	R-15 c.i.		**F-0.520 FOR 24" BELOW**	**R-15 c.i.**	
OPAQUE DOORS	SWINGING	U-0.370	N/A		**U-0.370**	N/A	
	NONSWINGING	U-0.310	N/A		**U-0.310**	N/A	
BUILDING ENVELOPE FENESTRATION	225 CMR 23.00 TABLE C402.4 ENVELOPE FENESTRATION *EXCEPT AS MODIFIED BY C402.1.5.1	REQUIRED			PROPOSED < 30% MAX ABOVE-GRADE WALL AREA		
		ASSEMBLY MAX. U-VALUE	ASSEMBLY MAX. SHGC	ASSEMBLY MIN. VT/SHGC	ASSEMBLY MAX. U-VALUE	ASSEMBLY MAX. SHGC	ASSEMBLY MIN. VT/SHGC
VERTICAL FENESTRATION	FIXED FENESTRATION*	U-0.25	U-0.38	1.10	**U-0.25**	**U-0.38**	**1.10**
	OPERABLE FENESTRATION	U-0.32	U-0.33	1.10	**U-0.32**	**U-0.33**	**1.10**
	ENTRANCE DOOR	U-0.63	U-0.33	1.10	**U-0.63**	**U-0.33**	**1.10**
SKYLIGHT		REQUIRED			PROPOSED < 3% MAX GROSS ROOF AREA		
	ALL TYPES	U-0.50	U-0.40	NR	**U-0.50**	**U-0.40**	**NR**
SOLAR READY ZONE - COMMERCIAL	APPENDIX CB, SECTION CB103.3 - 40% OF ROOF AREA LESS SKYLIGHTS AND MANDATORY ACCESS PATHS	78,736 SF ROOF AREA – 366 SF SKYLIGHT – 19,336 SF ACCESS PATHS = 59,034 SF TOTAL ROOF AREA 59,034 SF x 40% = 23,614 SF SOLAR READY AREA REQUIRED			**41,788 SF SOLAR READY AREA PROVIDED 41,788 SF / 59,034 SF = 70.7% > 40%**		

1

2

REV	ISSUED FOR	DATE	BY
2	ADDENDUM NO. 5	APR 24	MWM
1	ADDENDUM NO. 2	MAR 24	MWM
0	FOR INFORMATION ONLY	FEB 24	MWM

PROJECT ENGINEER: K. BARRETT
DESIGNED BY: J. WOJCIESKI
DRAWN BY: M. TAWADROUS
CHECKED BY: W. RUSSELL

IF THIS BAR DOES NOT MEASURE 1" THEN DRAWING IS NOT TO FULL SCALE 0 1/2" 1"

REGISTERED ARCHITECT ANTHONY STAMPONE No. 30719 NEW YORK STATE COMMONWEALTH OF MASSACHUSETTS

Hazen

HAZEN AND SAWYER
100 GREAT MEADOW ROAD, SUITE 702
WETHERSFIELD, CT 06109

SPRINGFIELD WATER AND SEWER COMMISSION

WEST PARISH WATER TREATMENT PLANT

WATER TREATMENT BUILDING
ARCHITECTURAL
BUILDING CODE SUMMARY

DATE: FEBRUARY 2024
HAZEN NO.: 90398-004
CONTRACT NO.: 24-51
DRAWING NUMBER: A-0100

Autodesk Docs://90398-004_West Parish Filter WTF/90398-004-ADM-A.rvt
4/18/2024 2:21:39 PM

BUILDING CODE ANALYSIS
MASSACHUSETTS STATE BUILDING CODE
TENTH EDITION CMR 780

NS=Non-sprinklered, S=Sprinklered, S1=Sprinklered maximum one story above grade plane, SM=Sprinklered two or more stories above grade plane, HR=hours, OL=Occupant Load, Max=Maximum, Min=Minimum, NA=Not Applicable, M.G.L.= Massachusetts General Law

CODE ITEM	CODE REFERENCE	PROPOSED DEWATERING BUILDING	
OCCUPANCY CLASSIFICATION AND USE	CH 3	PROPOSED CLASSIFICATION AND USE	
	SECTION 306 FACTORY INDUSTRIAL GROUP F	GROUP F-1 WATER / SEWER TREATMENT FACILITIES	
	SECTION 311 MODERATE-HAZARD STORAGE, GROUP S-1	GROUP S-1 ACCESSORY STORAGE	
	SECTION 312 UTILITY AND MISC GROUP U	GROUP U TANKS	
CONSTRUCTION TYPE	CH 6 TABLE 601	**IIB**	
BUILDING HEIGHT	CH 5 TABLE 504.3 ALLOWABLE BUILDING HEIGHT IN FEET ABOVE GRADE PLANE	ALLOWED	PROPOSED
	GROUP F-1	75'-0" (S)	**54'-6" (S)**
BUILDING HEIGHT (STORIES)	CH 5 TABLE 504.4 ALLOWABLE NUMBER OF STORIES ABOVE GRADE PLANE	ALLOWED	PROPOSED
	GROUP F-1	3 (S)	**2 (S)**
	GROUP U	3 (NS)	**1 (NS)**
BUILDING AREA	CH 5 TABLE 506.2 ALLOWABLE AREA FACTOR	ALLOWED	PROPOSED
	GROUP F-1	46,500 SF (SM)	**9,173 SF (SM)**
	GROUP U	8,500 (NS)	**3,400 SF (NS)**
EQUIPMENT PLATFORM	ALLOWABLE AREA = 2/3 OF SPACE WHICH CONTAINS PLATFORMS	2,757 SF x 2/3 = 1,838 SF	**792 SF**

FIRE RESISTANCE RATING REQUIREMENTS

CONSTRUCTION CLASSIFICATION	CH 6 TABLE 601 FIRE RESISTANCE RATINGS	RATING	
		REQUIRED	PROPOSED
PRIMARY STRUCTURAL FRAME	TYPE IIB	0HR	**0HR**
BEARING WALLS (EXTERIOR AND INTERIOR)	TYPE IIB	0HR	**0HR**
NONBEARING WALLS (INTERIOR)	TYPE IIB	0HR	**0HR**
FLOOR CONSTRUCTION	TYPE IIB	0HR	**0HR**
ROOF CONSTRUCTION	TYPE IIB	0HR	**0HR**
EXTERIOR WALL	CH 6 TABLE 602 FIRE RESISTANCE RATINGS BASED ON FIRE SEPARATION DISTANCE (FT)	REQUIRED	PROPOSED
	GROUP F-1: X > 30'	0 HR	**0HR**
OPENING PROTECTIVES	CH 7 TABLE 716.1 OPENING FIRE PROTECTION ASSEMBLIES, RATINGS AND MARKINGS	YES - DOORS AT FIRE RATED WALLS	YES
		NO - WINDOW ASSEMBLY	NO
SEPARATION OF OCCUPANCIES	CH 5 TABLE 508.4 SEPARATION BETWEEN OCCUPANCIES	REQUIRED	PROPOSED
	F-1 (S) AND U (NS)	2 HR	2 HR
PARAPETS	CH 7 SECTION 705.11	REQUIRED	PROPOSED
	AT EXTERIOR WALLS REQUIRED TO BE FIRE RATED	NA	NA
	AT EXTERIOR WALLS NOT REQUIRED TO BE FIRE RATED	NO	NO

CALCULATED OCCUPANT LOAD

USE GROUP OR SPACE DESCRIPTION	(a) AREA (SF)	(b) LOAD FACTOR CH 10 TABLE 1004.5	(a/b) OCCUPANT LOAD
F-1, S-1	8,331 SF	300 GROSS	28
U	NA	NA	NA
		TOTAL OCCUPANT LOAD	28

EGRESS REQUIREMENTS

		REQUIRED	PROPOSED
STAIRWAYS	CH 10 1011.2 STAIRWAYS WIDTH AND CAPACITY	44" MIN. 36" IF OL < 50	**44" MIN. OL = 26 MAX**
DOORS	CH 10 1010.1.1 MINIMUM CLEAR OPENING WIDTH	32" MIN.	**32" MIN.**
COMMON PATH OF EGRESS TRAVEL	CH 10 TABLE 1006.2.1 SPACES WITH ONE EXIT OR EXIT ACCESS DOORWAY	ALLOWED	PROPOSED
	OCCUPANCY F (S)	75'-0" MAX OL = 49 MAX	**SEE PLANS OL = 28 MAX**
EGRESS FROM STORIES	CH10 TABLE 1006.3.4 (2) STORIES WITH ACCESS TO ONE EXIT	ALLOWED	PROPOSED
	OCCUPANCY F-1 (S)	100'-0" MAX (S) OL <49	**SEE PLANS OL = 26 MAX**
DOORS	CH 10 1010.1.1 SIZE OF DOORS	REQUIRED	PROPOSED
		32" MIN	**36" MIN**
CORRIDOR	TABLE 1020.2 0.2" PER OCCUPANT	36" MIN OL < 50	**36" MIN OL = 28 MAX**
HANDRAIL	CH 10 1014.2. HANDRAIL HEIGHT	34" MIN 38" MAX	**34" MIN 38" MAX**
GUARDRAIL	CH 10 1015.3 GUARDRAIL HEIGHT	42" MIN	**42" MIN**
EXIT ACCESS TRAVEL DISTANCE	CH 10 TABLE 1017.2	ALLOWED	PROPOSED
	OCCUPANCY F-1 (S)	250'-0"	**SEE PLANS**

LIFE SAFETY SYSTEM REQUIREMENTS

		REQUIRED	PROPOSED
EMERGENCY LIGHTING	CH 10 SECTION 1008	YES	YES
EXIT SIGNS	CH 10 SECTION 1013	YES	YES
AUTOMATIC SPRINKLERS	CH 9 TABLE 903.2 GROUP F-1 1. FIRE AREA < 12,000 SF 2. FIRE AREA < 3 STORIES	NO	YES
	M.G.L. PART 1, TITLE XX, CHAPTER 148, SECTION 26G – REQ'D FOR BUILDINGS MORE THAN 7,500 S.F.	YES	
	NFPA 13 9.2.6 SPRINKLERS SHALL NOT BE REQUIRED IN ELECTRICAL EQUIPMENT ROOMS WHERE ALL OF THE FOLLOWING CONDITIONS ARE MET: 1. THE ROOM IS DEDICATED TO ELECTRICAL EQUIPMENT ONLY. 2. ONLY DRY-TYPE OR LIQUID-TYPE WITH LISTED K-CLASS FLUID ELECTRICAL EQUIPMENT IS USED. 3. EQUIPMENT IS INSTALLED IN A 2-HOUR FIRE-RATED ENCLOSURE INCLUDING PROTECTION FOR PENETRATIONS. 4. STORAGE IS NOT PERMITTED IN THE ROOM.	NO EXEMPT	NO ALL CONDITIONS MET
PORTABLE FIRE EXTINGUISHER	CH 9 SECTION 906	YES (TYPE ABC)	YES (TYPE ABC)
FIRE ALARM	CH 9 SECTION 907.2.4 GROUP F	NO OL < 500	YES
	CH 9 SECTION 903.4, 907.2 SPRINKLER SYSTEM SUPERVISION AND ALARMS	YES SPRINKLER SYSTEM	
PANIC HARDWARE	CH10 SECTION 1010.1.10	YES	YES

STRUCTURAL AND SEISMIC DESIGN LOADS

SEE STRUCTURAL DRAWINGS

ACCESSIBILITY

MASSACHUSETTS STATE BUILDING CODE, 10TH EDITION

CHAPTER 11, SECTION 1100.1 SCOPE

PUBLIC BUILDINGS SHALL BE DESIGNED TO BE ACCESSIBLE AND CONFORM TO REQUIREMENTS OF 521 CMR: THE ARCHITECTURAL ACCESS BOARD

521 CMR: THE ARCHITECTURAL ACCESS BOARD

	REQUIRED	PROPOSED
SECTION 3.2 NEW CONSTRUCTION, PUBLIC BUILDINGS	NO, NOT PUBLIC	**NO**
SECTION 3.12 NON-OCCUPIABLE SPACES	NO	**NO**

ENERGY CODE REQUIREMENTS - DEWATERING BUILDING
IECC 2021 with MASSACHUSETTS AMENDMENTS + STRETCH ENERGY CODE AMENDMENTS

PROVIDE BUILDING THERMAL ENVELOPE TESTING IN ACCORDANCE WITH SECTION 01 91 00 – BUILDING SYSTEMS COMMISSIONING

WESTFIELD, MA	**CLIMATE ZONE**	**5A**					
BUILDING ENVELOPE REQUIREMENTS	225 CMR 23.00 TABLE C402.1.4 OPAQUE THERMAL ENVELOPE	REQUIRED			PROPOSED		
		ASSEMBLY MAX. U-VALUE	INSULATION MIN. R-VALUE		ASSEMBLY MAX. U-VALUE	INSULATION MIN. R-VALUE	
ROOF	INSULATED ENTIRELY ABOVE ROOF DECK	U-0.032	R-30 c.i.		**U-0.032**	**R-30 c.i.**	
WALLS, ABOVE GRADE	MASS	U-0.090	R-11.4 c.i.		**U-0.090**	**R-12.5 c.i.**	
WALLS, BELOW GRADE	BELOW-GRADE WALL	C-0.119 FOR 10 FT BELOW GRADE	R-7.5 c.i.		**C-0.119 FOR 10 FT BELOW GRADE**	**R-15 c.i.**	
SLAB ON GRADE	UNHEATED SLAB	F-0.520 FOR 24" BELOW	R-15 c.i.		**F-0.520 FOR 24" BELOW**	**R-15 c.i.**	
OPAQUE DOORS	SWINGING	U-0.370	N/A		**U-0.370**	N/A	
	NONSWINGING	U-0.310	N/A		**U-0.310**	N/A	
BUILDING ENVELOPE FENESTRATION	225 CMR 23.00 TABLE C402.4 ENVELOPE FENESTRATION *EXCEPT AS MODIFIED BY C402.1.5.1	REQUIRED			PROPOSED		
		ASSEMBLY MAX. U-VALUE	ASSEMBLY MAX. SHGC	ASSEMBLY MIN. VT/SHGC	ASSEMBLY MAX. U-VALUE	ASSEMBLY MAX. SHGC	ASSEMBLY MIN. VT/SHGC
VERTICAL FENESTRATION	FIXED FENESTRATION*	U-0.25	U-0.38	1.10	**U-0.25**	**U-0.38**	**1.10**
	OPERABLE FENESTRATION	U-0.32	U-0.33	1.10	**U-0.32**	**U-0.33**	**1.10**
SOLAR READY ZONE - COMMERCIAL	APPENDIX CB, SECTION CB103.3 - 40% OF ROOF AREA LESS SKYLIGHTS AND MANDATORY ACCESS PATHS	3,851 SF ROOF AREA – 1,345 SF ACCESS PATHS = 2,506 SF TOTAL ROOF AREA 2,506 SF x 40% = 1,003 SF SOLAR READY AREA REQUIRED			**1,919 SF SOLAR READY AREA PROVIDED 1,919 SF / 2,506 SF = 76.5% > 40%**		

1

2

REV	ISSUED FOR	DATE	BY
2	ADDENDUM NO. 5	APR 24	MWM
1	ADDENDUM NO. 2	MAR 24	MWM
0	FOR INFORMATION ONLY	FEB 24	MWM

PROJECT ENGINEER: K. BARRETT
DESIGNED BY: J. WOJCIESKI
DRAWN BY: M. TAWADROUS
CHECKED BY: W. RUSSELL

IF THIS BAR DOES NOT MEASURE 1" THEN DRAWING IS NOT TO FULL SCALE 0 1/2" 1"

REGISTERED ARCHITECT ANTHONY STRONE No. 30719 NEW YORK STATE COMMONWEALTH OF MASSACHUSETTS

Hazen
HAZEN AND SAWYER
100 GREAT MEADOW ROAD, SUITE 702
WETHERSFIELD, CT 06109

SPRINGFIELD WATER AND SEWER COMMISSION

WEST PARISH WATER TREATMENT PLANT

DEWATERING BUILDING
ARCHITECTURAL
BUILDING CODE SUMMARY

DATE: FEBRUARY 2024
HAZEN NO.: 90398-004
CONTRACT NO.: 24-51
DRAWING NUMBER: A-0106

Autodesk Docs://90398-004_West Parish Filter WTF/90398-004-DWB-A.rvt
4/18/2024 2:22:02 PM

NOTES:

1. REFER TO DRAWINGS A-002, A-003 AND A-004 IN ARCHITECTURAL DRAWING SET FOR TEXT ASSOCIATED WITH ALL NOTE TAGS.

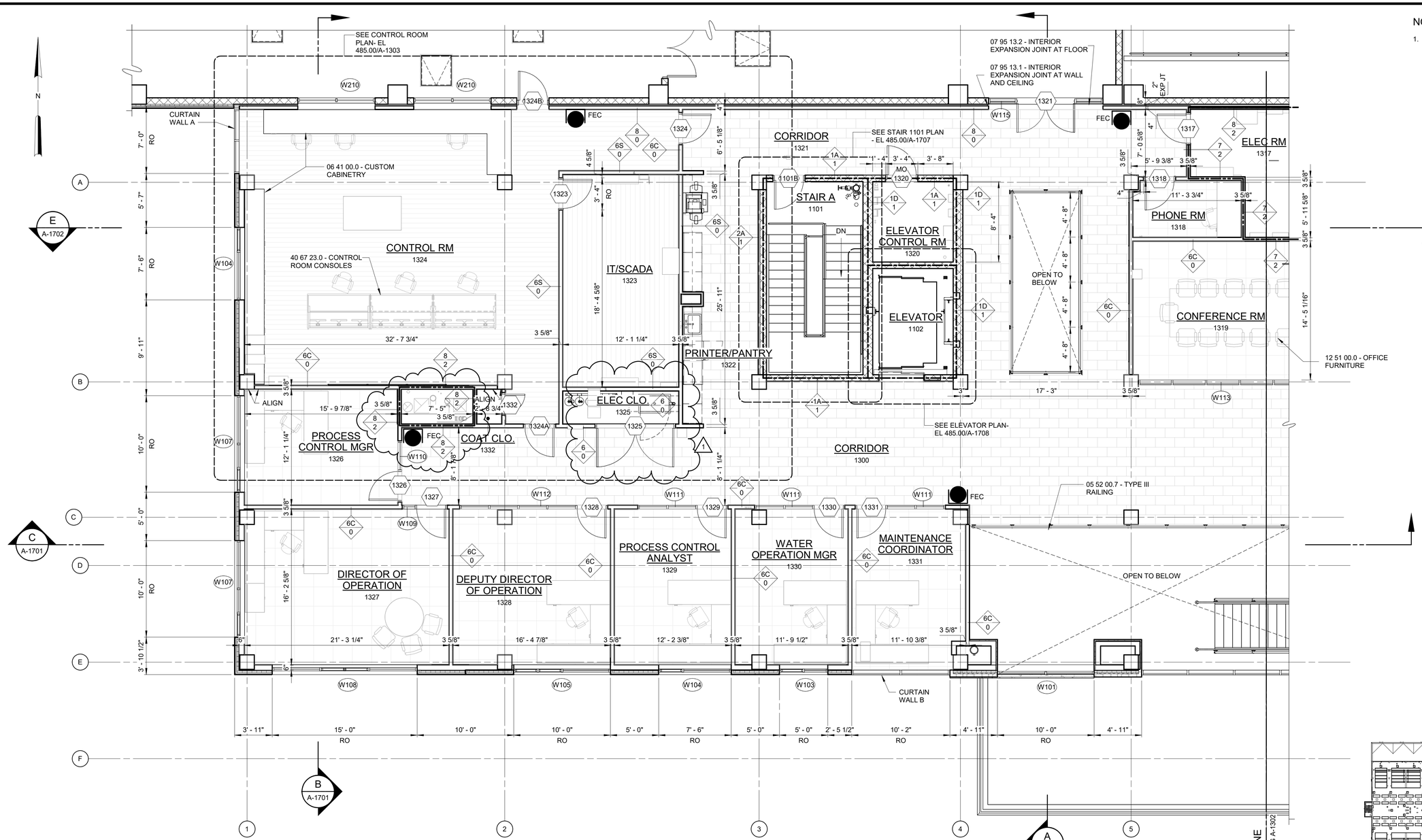

PLAN AT EL 485.00 - AREA 1

3/16" = 1'-0"

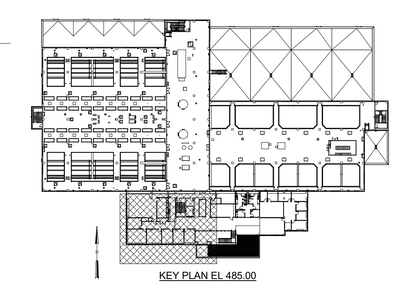

KEY PLAN EL 485.00

3/16" = 1'-0"

REV	ISSUED FOR	DATE	BY
1	ADDENDUM NO. 5	APR 24	MWM
0	ISSUED FOR BIDS	FEB 24	MWM

PROJECT ENGINEER:	K. BARRETT
DESIGNED BY:	J. WOJCIESKI
DRAWN BY:	M. TAWADROUS
CHECKED BY:	W. RUSSELL

IF THIS BAR DOES NOT MEASURE 1" THEN DRAWING IS NOT TO FULL SCALE

REGISTERED ARCHITECT ANTHONY STALLONE No. 30719 NEW YORK STATE COMMONWEALTH OF MASSACHUSETTS

Hazen

HAZEN AND SAWYER
100 GREAT MEADOW ROAD, SUITE 702
WETHERSFIELD, CT 06109

SPRINGFIELD WATER AND SEWER COMMISSION

WEST PARISH WATER TREATMENT PLANT

FILED SUB-BID

WATER TREATMENT BUILDING
ARCHITECTURAL
PLAN AT EL 485.00 - ADMINISTRATION AREA 1

DATE:	FEBRUARY 2024
HAZEN NO.:	90398-004
CONTRACT NO.:	24-51
DRAWING NUMBER:	A-1301

Autodesk Docs://90398-004_West Parish Filter WTF/90398-004-ADM-A.rvt
4/18/2024 11:07:18 AM

NOTES:

1. REFER TO DRAWINGS A-002, A-003 AND A-004 IN ARCHITECTURAL DRAWING SET FOR TEXT ASSOCIATED WITH ALL NOTE TAGS.

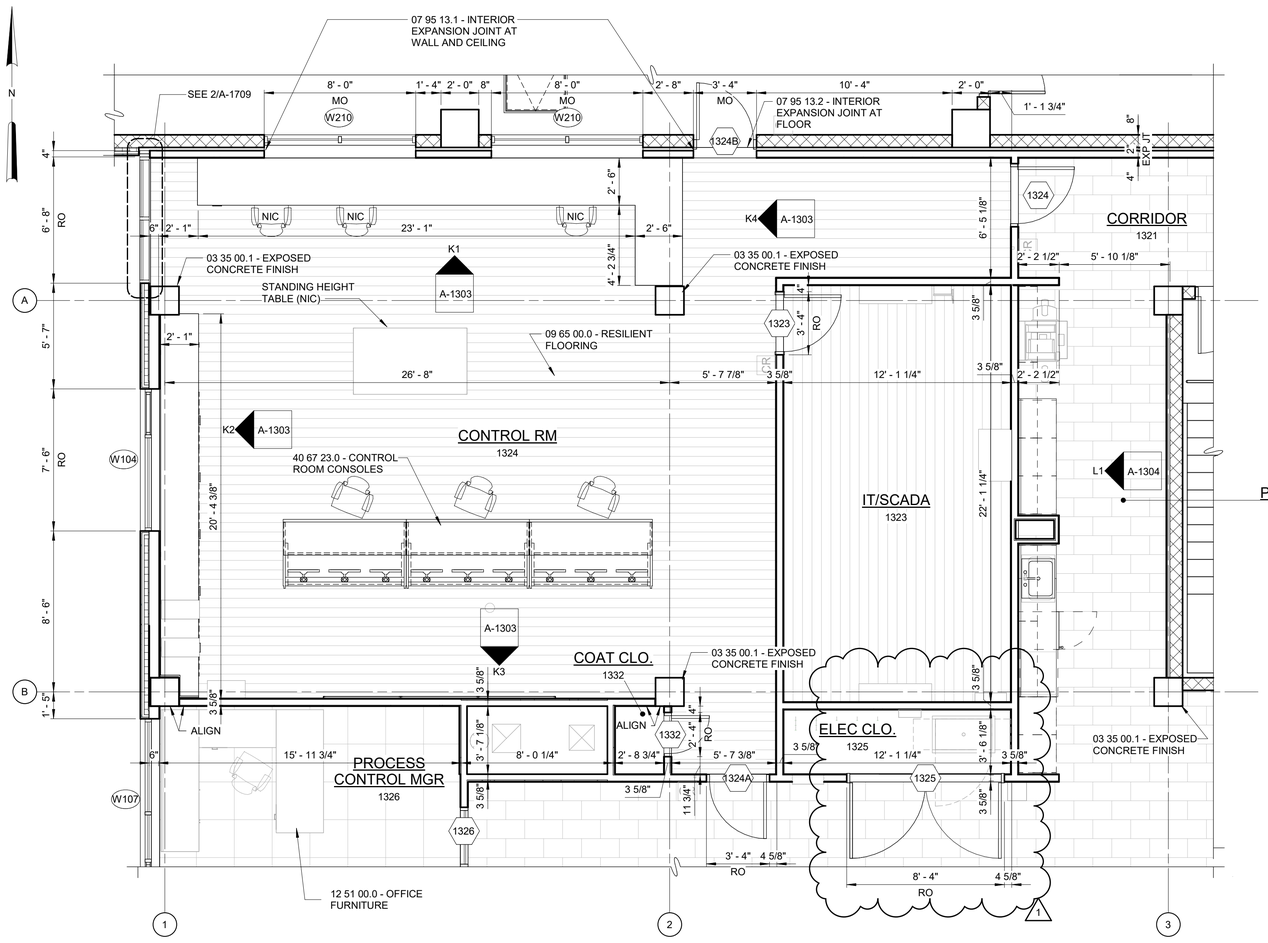

CONTROL ROOM PLAN- EL 485.00

1/4" = 1'-0"

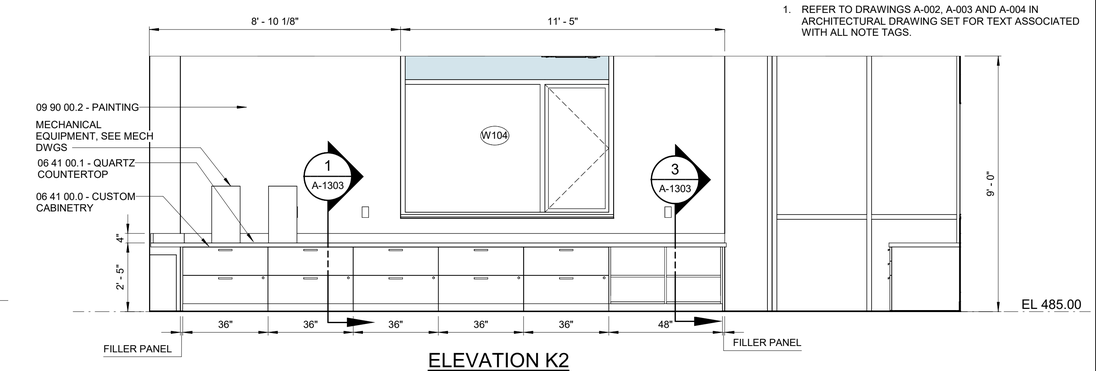

ELEVATION K2

3/8" = 1'-0"

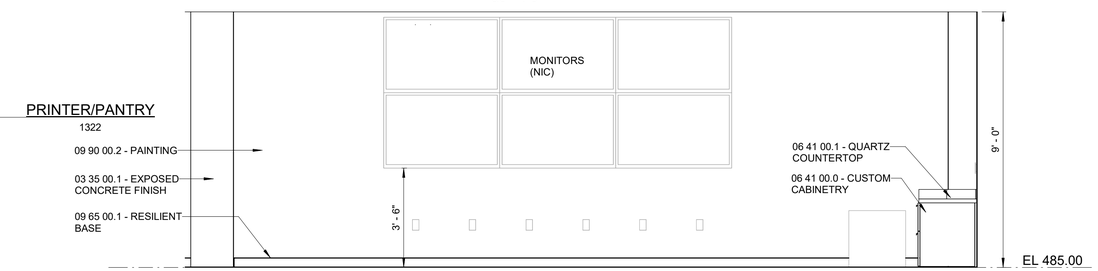

ELEVATION K3

3/8" = 1'-0"

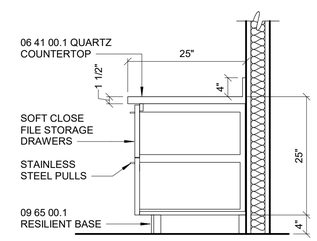

OFFICE CASEWORK - FILE DRAWERS

DETAIL	1
3/4" = 1'-0"	A-1303

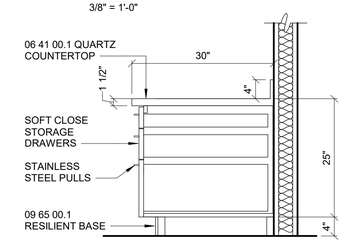

OFFICE CASEWORK - BOX/BOX/FILE

DETAIL	2
3/4" = 1'-0"	A-1303

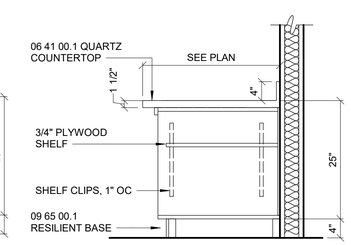

OFFICE CASEWORK - OPEN CABINET

DETAIL	3
3/4" = 1'-0"	A-1303

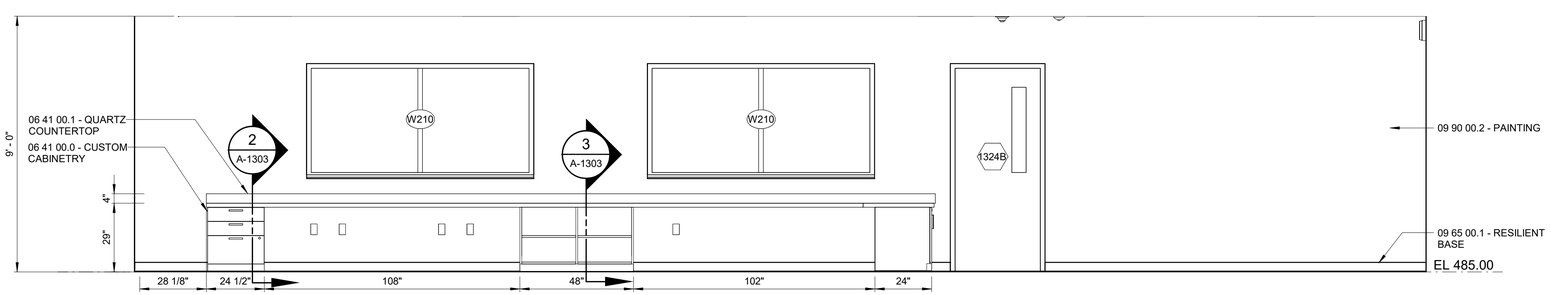

ELEVATION K1

3/8" = 1'-0"

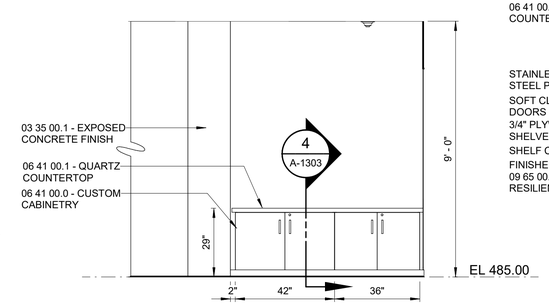

ELEVATION K4

3/8" = 1'-0"

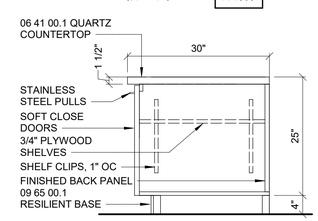

OFFICE CASEWORK - CABINET

DETAIL	4
3/4" = 1'-0"	A-1303

1/4" = 1'-0"

REV	ISSUED FOR	DATE	BY
1	ADDENDUM NO. 5	APR 24	MWM
0	ISSUED FOR BIDS	FEB 24	MWM

PROJECT ENGINEER:	K. BARRETT
DESIGNED BY:	J. WOJCIESKI
DRAWN BY:	M. TAWADROUS
CHECKED BY:	W. RUSSELL

IF THIS BAR DOES NOT MEASURE 1" THEN DRAWING IS NOT TO FULL SCALE

0 1/2" 1"

REGISTERED ARCHITECT ANTHONY STAVONE No. 30719 NEW YORK STATE COMMONWEALTH OF MASSACHUSETTS

Hazen

HAZEN AND SAWYER
100 GREAT MEADOW ROAD, SUITE 702
WETHERSFIELD, CT 06109

SPRINGFIELD WATER AND SEWER COMMISSION

WEST PARISH WATER TREATMENT PLANT

FILED SUB-BID

WATER TREATMENT BUILDING
ARCHITECTURAL
ENLARGED CONTROL ROOM AND PANTRY PLAN AT EL 485.00 - ADMINISTRATION AREA

DATE:	FEBRUARY 2024
HAZEN NO.:	90398-004
CONTRACT NO.:	24-51
DRAWING NUMBER:	A-1303

Autodesk Docs://90398-004_West Parish Filter WTF/90398-004-ADM-A.rvt
4/18/2024 10:32:40 AM

NOTES:

1. REFER TO DRAWINGS A-002, A-003 AND A-004 IN ARCHITECTURAL DRAWING SET FOR TEXT ASSOCIATED WITH ALL NOTE TAGS.

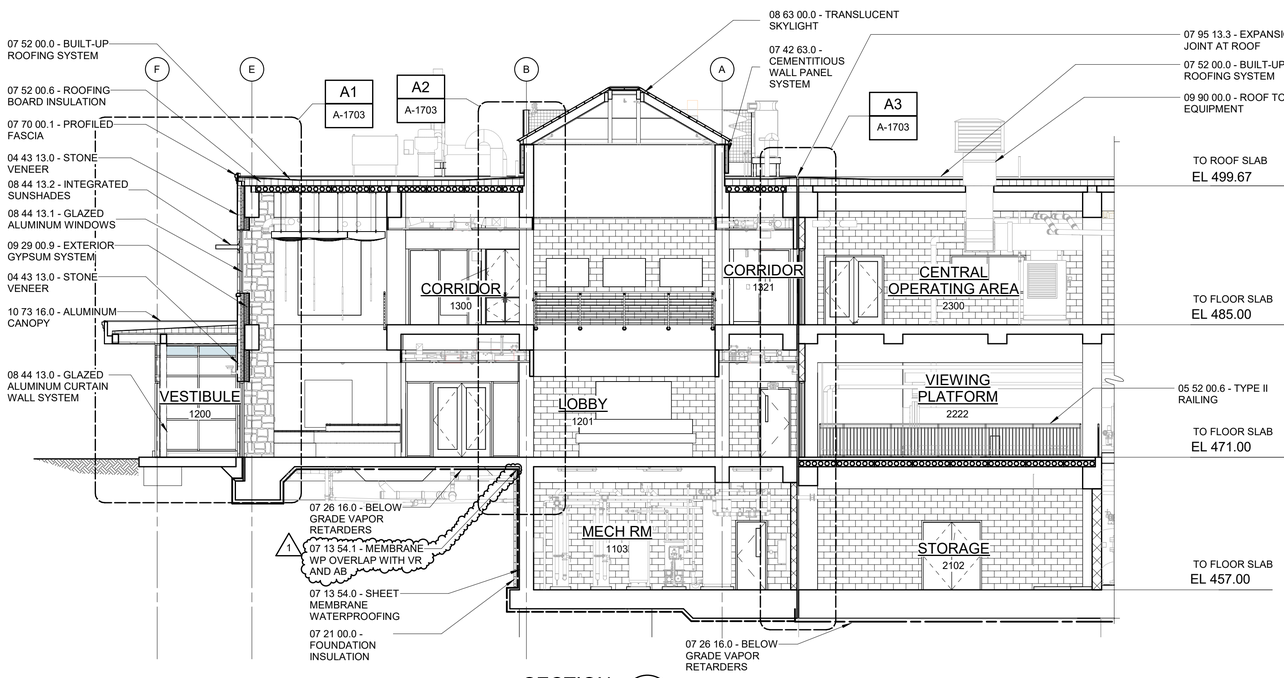

SECTION A (A-1101)
1/8" = 1'-0"

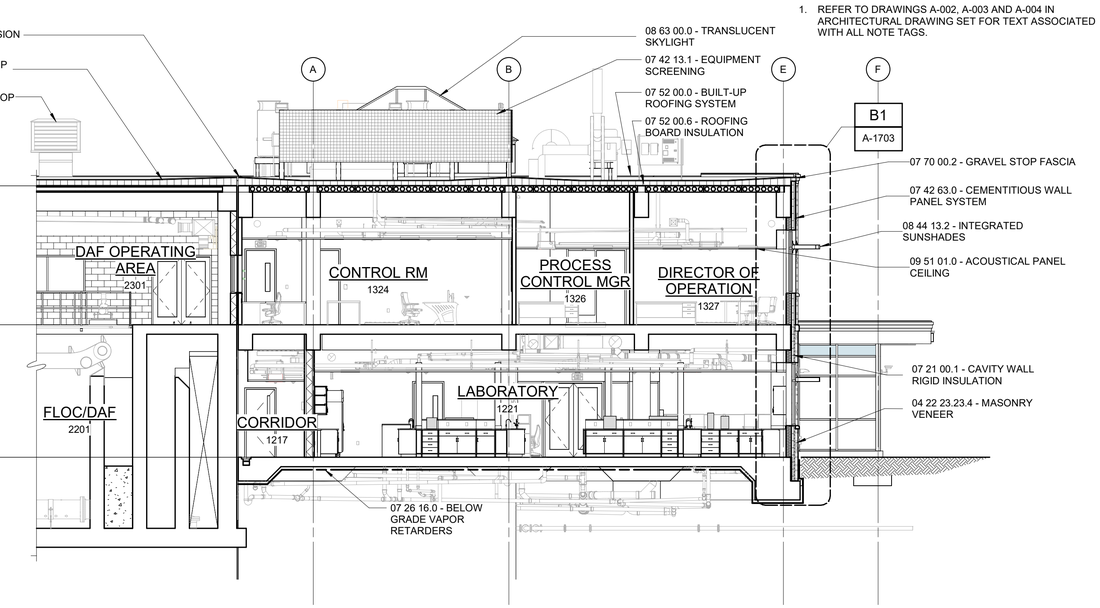

SECTION B (A-1200)
1/8" = 1'-0"

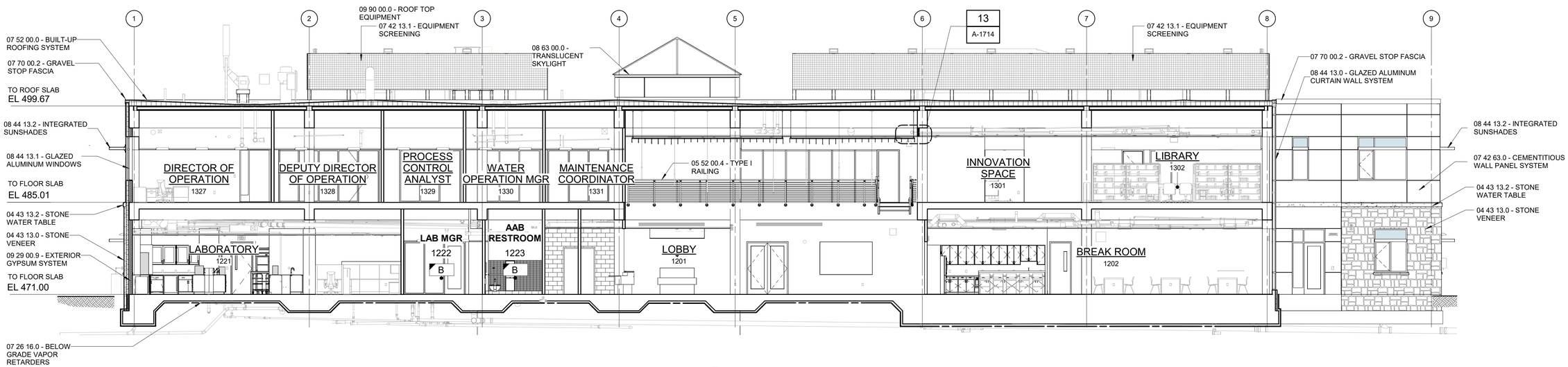

SECTION C (A-1200)
1/8" = 1'-0"

1/8" = 1'-0" 8 6 4 2 0 8'

REV	ISSUED FOR	DATE	BY
1	ADDENDUM NO. 5	APR 24	MWM
0	ISSUED FOR BIDS	FEB 24	MWM

PROJECT ENGINEER:	K. BARRETT
DESIGNED BY:	J. WOJCIESKI
DRAWN BY:	M. TAWADROUS
CHECKED BY:	W. RUSSELL
IF THIS BAR DOES NOT MEASURE 1" THEN DRAWING IS NOT TO FULL SCALE	0 1/2" 1"

REGISTERED ARCHITECT ANTHONY J. SALVANESCHI No. 30719 NEW YORK STATE COMMONWEALTH OF MASSACHUSETTS

Hazen

HAZEN AND SAWYER
100 GREAT MEADOW ROAD, SUITE 702
WETHERSFIELD, CT 06109

SPRINGFIELD WATER AND SEWER COMMISSION

WEST PARISH WATER TREATMENT PLANT

FILED SUB-BID

WATER TREATMENT BUILDING
ARCHITECTURAL
BUILDING SECTIONS - ADMINISTRATION AREAS
SHEET 1

DATE:	FEBRUARY 2024
HAZEN NO.:	90398-004
CONTRACT NO.:	24-51
DRAWING NUMBER:	A-1701

Autodesk Docs://90398-004_West Parish Filter WTF/90398-004-ADM-A.rvt
4/18/2024 10:51:43 AM

GENERAL STRUCTURAL NOTES

G-1 THESE NOTES ARE GENERAL AND SUPPLEMENT THE SPECIFICATIONS. THESE NOTES APPLY TO THE ENTIRE PROJECT UNLESS MODIFIED OR NOTED OTHERWISE IN THE CONTRACT DOCUMENTS.

G-2 STANDARD DETAILS SHALL BE USED WHEN REFERRED TO OR WHEN NO MORE RESTRICTIVE OR DIFFERENT DETAILS ARE SHOWN ON THE DRAWINGS.

G-3 DESIGN IS IN ACCORDANCE WITH AND CONSTRUCTION SHALL COMPLY WITH THE PROVISIONS OF THE OF MASSACHUSETTS STATE BUILDING CODE. THE DESIGN LOADS AND OTHER DESIGN VALUES GIVEN IN NOTES G-4 THROUGH G-8 WERE USED FOR DESIGN OF STRUCTURES UNLESS NOTED OTHERWISE ON THE DRAWINGS.

FOR THE WATER TREATMENT BUILDING - PROCESS AREA;
PROCESS AREA (WEST) IS DEFINED BY CL 1 THRU 8 AND CL A THRU R.
PROCESS AREA (CHEMICAL) IS DEFINED BY CL 9 THRU 17 AND CL B THRU G.
PROCESS AREA (FILTERS) IS DEFINED BY CL 9 THRU 18 AND CL H THRU R.

G-4 LIVE LOADS:

STRUCTURE \ LEVEL	ROOF	TOP FLOOR(S)	BOTTOM / GROUND FLOOR
WATER TREATMENT BUILDING -ADMIN AREA	20 PSF	ELEC RM: 250 PSF CTRL / IT / MECH / STORAGE RMS & ELEC CLOSET: 150 PSF ALL OTHER AREAS: 100 PSF	EL 471.00/457.00: 300 PSF ELEVATOR PIT: PER ANSI 17.1
WATER TREATMENT BUILDING -PROCESS AREA (WEST)	EL 513.00/509.67/499.00: 20 PSF EL 496.33: 20 PSF EL 485.00 ROOF: 20 PSF	EL 485.00: 150 PSF EL 471.00: 100 PSF	EL 471.00: 150 PSF EL 466.50: 300 PSF OR FORKLIFT LOAD EL 463.50/457.00: 300 PSF OR FLUID
WATER TREATMENT BUILDING -PROCESS AREA (CHEMICAL)	EL 488.50: 20 PSF	N/A	EL 466.50: 300 PSF EL 462.50: 300 PSF
WATER TREATMENT BUILDING -PROCESS AREA (FILTERS)	EL 498.67: 20 PSF EL 485.00 ROOF: 20 PSF	EL 485.00 ELEC RM: 250 PSF EL 485.00 OTHER: 150 PSF EL 471.50: 150 PSF OR FLUID EL 471.00: 150 PSF	EL 466.50: 150 PSF EL 463.50/457.00/446.00: 300 PSF OR FLUID
DEWATERING BUILDING	EL 515.83: 20 PSF EL 499.83: 20 PSF	ELEC RM: 250 PSF EL 493.17 CENTR. PLAT: 150 PSF EL 484.50 OTHER AREAS: 150 PSF	EL 464.50: 300 PSF OR HS-20 EL 450.00: 300 PSF
RESIDUALS STORAGE AND CENTRATE TANKS	N/A	150 PSF	300 PSF OR FLUID
WASTE WASHWATER TANK	N/A	150 PSF	300 PSF OR FLUID
CHEMICAL INJECTION VAULT	N/A	150 PSF	300 PSF

-ALL STAIRWAYS, LANDINGS AND PLATFORMS ARE DESIGNED FOR A LIVE LOAD = 100 PSF UNLESS NOTED OTHERWISE.

G-5 SNOW LOAD:

GROUND SNOW LOAD (Pg) = 40 PSF
FLAT-ROOF SNOW LOAD (Pf) = 35 PSF FOR WATER TREATMENT BUILDING - ALL AREAS, AND DEWATERING BUILDING
= 37 PSF FOR RESIDUALS STORAGE AND CENTRATE TANKS AND WASTE WASHWATER TANK
SNOW EXPOSURE FACTOR (Ce) = 1.0
SNOW LOAD IMPORTANCE FACTOR (Is) = 1.1
THERMAL FACTOR (Ct) = 1.0 FOR WATER TREATMENT BUILDING - ADMIN AREA
= 1.1 FOR WATER TREATMENT BUILDING - ALL OTHER AREAS, AND DEWATERING BUILDING
= 1.2 FOR RESIDUALS STORAGE AND CENTRATE TANKS AND WASTE WASHWATER TANK
SEE DRAWINGS S-1501, S-2502, S-3704 FOR STRUCTURE SPECIFIC DRIFT SURCHARGE LOAD INFORMATION

G-6 WIND DESIGN CRITERIA:

BASIC DESIGN WIND SPEED (V) = 123 MPH
ALLOWABLE STRESS DESIGN WIND SPEED (Vasd) = 96 MPH
RISK CATEGORY = III
WIND EXPOSURE = C

STRUCTURE \ PARAMETER	PRESSURE COEFFICIENT GCpi	WIND DESIGN PRESSURE	COMPONENTS AND CLADDING	LATERAL LOAD RESISTING SYSTEM
WATER TREATMENT BUILDING -ADMIN AREA	±0.18	33.1 PSF	40.1 PSF	INT REINF CONCRETE MOMENT FRAME
WATER TREATMENT BUILDING -PROCESS AREA (WEST)	±0.55	33.1 PSF	52.6 PSF	INT REINF CONCRETE MOMENT FRAME
WATER TREATMENT BUILDING -PROCESS AREA (CHEMICAL)	±0.55	30.6 PSF	51.6 PSF	INT REINF CONCRETE MOMENT FRAME
WATER TREATMENT BUILDING -PROCESS AREA (FILTERS)	±0.55	33.1 PSF	52.6 PSF	INT REINF CONCRETE MOMENT FRAME
DEWATERING BUILDING	±0.55	36.1 PSF	57.3 PSF	INT REINF CONCRETE MOMENT FRAME

**COMPONENTS AND CLADDING PRESSURES ARE BASED ON WALL ZONE 5 SUCTIONS WITH A 50 SF EFFECTIVE WIND AREA

GENERAL STRUCTURAL NOTES, CONTINUED

G-7 SEISMIC LOAD:

RISK CATEGORY = III
SEISMIC IMPORTANCE FACTOR (Ie) = 1.25
SITE CLASS = C
MAPPED SPECTRAL RESPONSE ACCELERATIONS (Ss/S1) = 0.172/0.065
SPECTRAL RESPONSE ACCELERATIONS (SMS/SM1) = 0.224/0.098
SPECTRAL RESPONSE COEFFICIENTS (SDS/SD1) = 0.149/0.065
SEISMIC DESIGN CATEGORY = B

STRUCTURE \ PARAMETER	BASIC STRUCTURAL SYSTEM	DESIGN BASE SHEAR	SEISMIC RESPONSE COEFFICIENT Cs	RESPONSE MODIFICATION COEFFICIENT R	ANALYSIS PROCEDURE
WATER TREATMENT BUILDING -ADMIN AREA	INT REINF CONCRETE MOMENT FRAME	218 K	0.037	5	EQUIVALENT LATERAL FORCE
WATER TREATMENT BUILDING (BASE EL 471.00) -PROCESS AREA (WEST)	INT REINF CONCRETE MOMENT FRAME	419 K	0.037	5	EQUIVALENT LATERAL FORCE
WATER TREATMENT BUILDING -PROCESS AREA (CHEMICAL)	INT REINF CONCRETE MOMENT FRAME	147 K	0.037	5	EQUIVALENT LATERAL FORCE
WATER TREATMENT BUILDING (BASE EL 471.00) -PROCESS AREA (FILTERS)	INT REINF CONCRETE MOMENT FRAME	183 K	0.037	5	EQUIVALENT LATERAL FORCE
DEWATERING BUILDING	INT REINF CONCRETE MOMENT FRAME	108 K	0.030	5	EQUIVALENT LATERAL FORCE

G-8 RAIN LOAD:
RAIN INTENSITY (i) = 2.65 IN/HR

G-9 ALL DIMENSIONS INDICATED FOR EXISTING STRUCTURES SHALL BE VERIFIED BY FIELD MEASUREMENT. ALL DIMENSIONS THAT ARE CONTROLLED BY OR RELATED TO EQUIPMENT SHALL BE VERIFIED BY THE CONTRACTOR WITH THE MANUFACTURER SHOP DRAWINGS PRIOR TO CONSTRUCTION.

G-10 THE CONTRACTOR IS RESPONSIBLE FOR VERIFYING ALL EXISTING INFORMATION IN THE FIELD AS REQUIRED FOR NEW WORK.

G-11 IF A CONFLICT IS FOUND BETWEEN DIFFERENT PORTIONS OF THE CONTRACT DOCUMENTS, THE CONTRACTOR SHALL NOTIFY THE ENGINEER IMMEDIATELY. CONTINUED CONSTRUCTION OF THE AREA IN CONFLICT SHALL BE AT THE CONTRACTOR'S OWN RISK UNTIL THE CONFLICT IS RESOLVED.

1

G-12 EQUIPMENT ANCHOR SIZES, TYPES, EMBEDMENT AND PATTERNS SHALL BE DESIGNED BY THE MANUFACTURER OF THE EQUIPMENT. IF EQUIPMENT MANUFACTURER IS UNABLE TO PROVIDE DESIGN OF ANCHOR EMBEDMENT, DESIGN SHALL BE BY ENGINEER CURRENTLY REGISTERED IN THE COMMONWEALTH OF MASSACHUSETTS BASED ON LOADS PROVIDED BY EQUIPMENT MANUFACTURER. SUBMIT SIZE, PLACEMENT, AND EMBEDMENT REQUIREMENTS. ALL ANCHOR PATTERNS SHALL BE TEMPLATED TO ENSURE ACCURACY OF PLACEMENT.

G-13 STRUCTURAL DRAWINGS SHALL BE USED IN COORDINATION WITH THE DRAWINGS OF ALL OTHER DISCIPLINES AND MANUFACTURER'S SHOP DRAWINGS.

G-14 STRUCTURES HAVE BEEN DESIGNED FOR OPERATIONAL LOADS ON THE COMPLETED STRUCTURE. DURING CONSTRUCTION, THE STRUCTURES SHALL BE PROTECTED BY BRACING AND TEMPORARY SUPPORTS WHEREVER EXCESSIVE CONSTRUCTION LOADS MAY OCCUR. OVERSTRESSING OF ANY STRUCTURAL ELEMENT IS PROHIBITED.

G-15 IF CONTRACTOR DESIRES TO TEMPORARILY PLACE OR MOVE LOADS ON OR ADJACENT TO EXISTING STRUCTURES OR UTILITIES DURING CONSTRUCTION PROCESS, CONTRACTOR IS EXCLUSIVELY RESPONSIBLE FOR MAINTAINING STRUCTURAL INTEGRITY AND AVOIDING OVERSTRESSING AND DAMAGING EXISTING STRUCTURES AND UTILITIES. CONTRACTOR SHALL SUBMIT STRUCTURAL CALCULATIONS AND DRAWINGS VERIFYING THAT PROPOSED CONSTRUCTION {INCLUDING APPLICATION OF TEMPORARY CONSTRUCTION LOADS} WILL NOT OVERSTRESS OR DAMAGE EXISTING STRUCTURES AND UTILITIES. DRAWINGS AND CALCULATIONS SHALL BE SEALED BY A PROFESSIONAL ENGINEER CURRENTLY REGISTERED IN THE COMMONWEALTH OF MASSACHUSETTS.

G-16 NO BACKFILL SHALL BE PLACED AGAINST ANY SUBSTRUCTURE WALLS UNLESS ALL ADJACENT SUPPORTING ELEMENTS HAVE ACHIEVED DESIGN STRENGTH, OR WALLS HAVE BEEN PROPERLY BRACED, AND IN ANY CASE NOT SOONER THAN 28 DAYS AFTER THE PLACING OF CONCRETE UNLESS APPROVED BY THE ENGINEER. SUPPORTING ELEMENTS SHALL INCLUDE ADJACENT WALLS, SLABS, BEAMS AND COLUMNS.

G-17 LEAKAGE TESTING OF HYDRAULIC STRUCTURES SHALL NOT BEGIN UNTIL ALL STRUCTURAL ELEMENTS HAVE REACHED THE SPECIFIED MINIMUM CONCRETE STRENGTH. BACKFILL SHALL NOT BE PLACED AROUND ANY HYDRAULIC STRUCTURE UNTIL THE LEAKAGE TEST HAS BEEN COMPLETED UNLESS APPROVED BY THE ENGINEER.

FOUNDATIONS

F-1 CONCRETE (CAST-IN-PLACE) NOTES APPLY TO FOUNDATIONS.

F-2 ALLOWABLE SOIL BEARING PRESSURES AND DESIGN GROUNDWATER ELEVATIONS:

STRUCTURE \ PARAMETER	ALL. SOIL BRG PRESSURE	DESIGN GROUNDWATER ELEVATION
WATER TREATMENT BLDG - ADMIN AREA	3500 PSF	EL 460.00
WATER TREATMENT BLDG - PROCESS AREA	3500 PSF	EL 460.00
DEWATERING BLDG	3500 PSF	EL 448.00
RESIDUALS STORAGE AND CENTRATE TANKS	3500 PSF	EL 448.00
WASTE WASHWATER TANK	3500 PSF	EL 448.00
CHEMICAL INJECTION VAULT	2000 PSF	EL 448.00

F-3 MINIMUM DEPTH FROM ADJACENT FINISHED GRADE TO BOTTOM OF FOUNDATION = 48 INCHES.

F-4 THE 100-YEAR FLOOD ELEVATION IS LOWER THAN THE DESIGN GROUNDWATER ELEVATION AND DOES NOT AFFECT THE DESIGN OF STRUCTURES.

PRECAST CONCRETE

PC-1 PRECAST STRUCTURAL MEMBERS SHALL BE DESIGNED BY A PROFESSIONAL ENGINEER REGISTERED IN THE COMMONWEALTH OF MASSACHUSETTS. OPENINGS TO ALLOW VENT PIPES, STRUCTURAL STEEL BRACING AND COLUMNS TO PASS THROUGH SHALL BE PROVIDED.

PC-2 PRECAST VAULTS AND MANHOLES SHALL BE DESIGNED BY A PROFESSIONAL ENGINEER REGISTERED IN THE COMMONWEALTH OF MASSACHUSETTS. STRUCTURAL DRAWINGS SHALL INDICATE DESIGN IS IN COMPLIANCE WITH THE MASSACHUSETTS STATE BUILDING CODE.

CONCRETE (CAST-IN-PLACE)

C-1 DESIGN OF CONCRETE ELEMENTS INCLUDING WALLS, FORMED SLABS, BEAMS, AND COLUMNS IS IN ACCORDANCE WITH ACI 318 (CODE REQUIREMENTS FOR STRUCTURAL CONCRETE) AND 350 (CODE REQUIREMENTS FOR ENVIRONMENTAL ENGINEERING CONCRETE STRUCTURES).

C-2 CONCRETE STRENGTH CLASSES (28-DAY COMPRESSIVE STRENGTH):

A) CLASS A1 CONCRETE (4,500 PSI): NORMAL WEIGHT STRUCTURAL CONCRETE TO BE USED IN ALL STRUCTURES QUALIFYING AS ENVIRONMENTAL CONCRETE STRUCTURES THAT ARE DESIGNED IN ACCORDANCE WITH ACI 350 INCLUDING PUMP STATIONS, TANKS, BASINS, PROCESS STRUCTURES, AND ANY STRUCTURES CONTAINING FLUID OR PROCESS CHEMICALS OR OTHER MATERIALS USED IN TREATMENT PROCESS.

B) CLASS A2 CONCRETE (4,000 PSI): NORMAL WEIGHT STRUCTURAL CONCRETE IN ALL STRUCTURES OTHER THAN STRUCTURES QUALIFYING AS ENVIRONMENTAL CONCRETE STRUCTURES AS DESCRIBED ABOVE, AND FOR ALL SIDEWALKS, CURB AND GUTTERS, AND PAVEMENT.

C) CLASS A3 CONCRETE (4,000 PSI): NORMAL WEIGHT STRUCTURAL CONCRETE TO BE USED FOR INTERIOR SLABS WHERE A TYPE "D" STEEL TROWELED FINISH OR TYPE "G" HARDENED FINISH IS REQUIRED. CLASS A3 CONCRETE SHALL NOT CONTAIN ENTRAINED AIR.

D) CLASS A4 CONCRETE (4,000 PSI): NORMAL WEIGHT STRUCTURAL CONCRETE TO BE USED WHERE SPECIFICALLY CALLED FOR ON CONTRACT DRAWINGS OR AREAS WHERE SPECIFICALLY REQUESTED BY CONTRACTOR AND APPROVED BY ENGINEER. CLASS A4 CONCRETE IS IDENTICAL TO CLASS A2 CONCRETE EXCEPT THAT COARSE AGGREGATE SHALL BE SIZE #8 IN ACCORDANCE WITH ASTM C33.

E) CLASS A6 CONCRETE (6,000 PSI): NORMAL WEIGHT STRUCTURAL CONCRETE TO BE USED FOR SUPERSTRUCTURE FRAMES WHERE SPECIFICALLY REQUIRED ON CONTRACT DRAWINGS. SUPERSTRUCTURE FRAMES ARE CONCRETE MOMENT FRAME STRUCTURES AND INCLUDE ELEVATED SLABS PLACED INTEGRALLY WITH FRAMES.

F) CLASS A7 CONCRETE (6,000 PSI): NORMAL WEIGHT STRUCTURAL CONCRETE TO BE USED FOR SUPERSTRUCTURE FRAMES WHERE SPECIFICALLY CALLED FOR ON CONTRACT DRAWINGS OR AREAS WHERE SPECIFICALLY REQUESTED BY CONTRACTOR AND APPROVED BY ENGINEER. CLASS A7 CONCRETE IS IDENTICAL TO CLASS A6 CONCRETE EXCEPT THAT COARSE AGGREGATE SHALL BE SIZE #8 IN ACCORDANCE WITH ASTM C33

G) CLASS B CONCRETE (3,000 PSI): NORMAL WEIGHT STRUCTURAL CONCRETE USED FOR DUCT BANK ENCASEMENTS, CATCH BASINS, FENCE AND GUARD POST EMBEDMENT, CONCRETE FILL, AND OTHER AREAS WHERE SPECIFICALLY NOTED ON CONTRACT DRAWINGS.

H) CLASS M CONCRETE (4,500 PSI): NORMAL WEIGHT STRUCTRAL CONCRETE USED FOR MASS CONCRETE AS DEFINED BY ACI 207.1R. SEE SPECIFICATION 03 30 10 MASS CONCRETE.

C-3 ALL BAR REINFORCING SHALL CONFORM TO ASTM A615, GRADE 60 UNLESS NOTED OTHERWISE. WELDED WIRE FABRIC SHALL CONFORM TO ASTM A1064.

C-4 CONCRETE COVER FOR REINFORCING (UNLESS NOTED OTHERWISE ON THE DRAWINGS):

A) CONCRETE DEPOSITED DIRECTLY AGAINST SOIL:	3"
B) CONCRETE EXPOSED TO WEATHER (#5 OR SMALLER):	1 1/2"
CONCRETE EXPOSED TO WEATHER (#6 OR LARGER):	2"
C) SLABS:	1 1/2"
AT SURFACES CONTACTING FLUID:	2"
D) BEAMS AND COLUMNS (TO MAIN REINFORCEMENT):	2"
BEAMS AND COLUMNS (TO COLUMN TIES OR STIRRUPS):	1 1/2"
E) WALLS 12" OR MORE:	2"
WALLS LESS THAN 12" (#5 OR SMALLER):	1 1/2"
WALLS LESS THAN 12" (#6 OR LARGER):	2"
F) FOR SURFACES EXPOSED TO FLUID IN BEAMS, COLUMNS AND WALLS:	ADD 1/2" TO ABOVE VALUES

C-5 SPLICES SHALL BE CLASS "B" CONFORMING TO THE PROVISIONS OF ACI 318 UNLESS NOTED OTHERWISE. SPLICE LENGTH FOR TWO DIFFERENT SIZED BARS TO BE LAP SPLICED TOGETHER SHALL BE THE LENGTH OF THE LARGER BAR UNLESS NOTED OTHERWISE.

C-6 CONSTRUCTION JOINTS SHALL BE LOCATED AS SHOWN ON THE DRAWINGS. CONSTRUCTION JOINTS NOT SHOWN SHALL BE SUBMITTED BY THE CONTRACTOR FOR THE APPROVAL OF THE ENGINEER PRIOR TO SUBMITTING REBAR SHOP DRAWINGS.

C-7 ALL JOINTS WHICH ARE IN MEMBERS IN CONTACT WITH LIQUID OR BELOW GRADE SHALL HAVE A WATERSTOP. CONSTRUCTION JOINTS SHALL HAVE A 6" PVC RIBBED WATERSTOP. EXPANSION JOINTS SHALL HAVE A 9" PVC CENTER BULB RIBBED WATERSTOP. IN VERTICAL JOINTS, WATERSTOPS SHALL TERMINATE NO LESS THAN 18" ABOVE THE MAXIMUM WATER SURFACE OR 18" ABOVE GRADE, WHICHEVER IS HIGHER.

C-8 ALL EXPOSED CORNERS SHALL HAVE A 3/4" CHAMFER.

C-9 EQUIPMENT SUPPORTS, ANCHORAGES, OPENINGS, RECESSES AND REVEALS NOT SHOWN ON THE STRUCTURAL DRAWINGS BUT REQUIRED BY OTHER CONTRACT DOCUMENTS, SHALL BE INSTALLED PRIOR TO PLACING CONCRETE.

C-10 REINFORCING BARS AND ACCESSORIES SHALL NOT BE IN CONTACT WITH ANY METAL PIPE, PIPE FLANGE, METAL CONDUIT, OR OTHER METAL PARTS EMBEDDED IN CONCRETE. A MINIMUM CLEARANCE OF 2" SHALL BE PROVIDED.

C-11 CONDUITS AND OTHER SIMILAR ITEMS EMBEDDED IN OR PENETRATING THROUGH CONCRETE SHALL BE SPACED ON CENTER NOT LESS THAN 3 TIMES THEIR OUTSIDE DIMENSION, BUT NOT LESS THAN 2 1/2" CLEAR. WHEN SUCH ITEMS ARE EMBEDDED IN WALLS OR SLABS, THEY SHALL NOT OCCUPY MORE THAN 1/3 OF THE MEMBER THICKNESS.

C-12 AT ALL TYPICAL CURBS, EQUIPMENT PADS, AND PIPE SUPPORT PIERS, REINFORCING DOWELS SHOWN MAY BE REPLACED WITH ADHESIVE DOWELS AS SPECIFIED. DOWELS LOCATED ON TOP OF CONCRETE BEAM SHALL BE CAST IN CONCRETE UNLESS ADHESIVE DOWELS ARE APPROVED BY ENGINEER. DOWELS LOCATED CLOSER THAN 3" FROM ANY EDGE OF CONCRETE SHALL NOT BE REPLACED WITH ADHESIVE DOWELS.

C-13 ADJUST THE LOCATION OF DOWELS OR ANCHORS PLACED INTO HARDENED CONCRETE AS NEEDED TO AVOID DRILLING THROUGH ANY REINFORCING BARS. IF THE LOCATION NEEDS TO BE MODIFIED, CONTACT THE ENGINEER. CONTRACTOR SHALL USE NON-DESTRUCTIVE MEANS TO FIELD LOCATE REINFORCEMENT PRIOR TO DRILLING HOLES FOR DOWELS OR ANCHORS.

C-14 CLEAR DISTANCE FROM ANCHOR RODS TO ANY CONCRETE EDGE SHALL BE 4" MINIMUM UNLESS NOTED OTHERWISE.

C-15 WHERE HORIZONTAL CONSTRUCTION JOINTS THAT ARE NOT SHOWN ON DRAWINGS ARE ADDED IN WALLS THAT ARE LIQUID RETAINING OR SOIL RETAINING, HORIZONTAL WALL REINFORCING LOCATED WITHIN A DISTANCE OF 6' - 0" ABOVE THE JOINT SHALL BE PROVIDED TO MEET THE FOLLOWING MINIMUM QUANTITIES:
- ON EACH FACE OF WALLS 24 INCHES THICK OR LESS, THE AREA OF HORIZONTAL WALL REINFORCING (IN^2/FT) SHALL BE NO LESS THAN 0.06 x Tw, WHERE Tw IS THE WALL THICKNESS IN INCHES.
- ON EACH FACE OF WALLS GREATER THAN 24 INCHES THICK, THE AREA OF HORIZONTAL WALL REINFORCING SHALL BE NO LESS THAN 1.44 IN^2/FT.

IF THE HORIZONTAL WALL REINFORCING SHOWN ON THE DRAWINGS IS LESS THAN THESE MIMIMUM QUANTITIES, THE SPACING OF THE HORIZONTAL WALL REINFORCING WITHIN A DISTANCE OF 6' - 0" ABOVE THE ADDED JOINT SHALL BE REDUCED TO PROVIDE THE REQUIRED MINIMUM QUANTITY. IF THE HORIZONTAL WALL REINFORCING SHOWN ON THE DRAWINGS IS MORE THAN THE MINIMUM QUANTITIES REQUIRED ABOVE, THE HORIZONTAL WALL REINFORCING SHALL BE PROVIDED AS SHOWN ON THE DRAWINGS.

REV	ISSUED FOR	DATE	BY
1	ADDENDUM 5	APR 24	MWM
0	ISSUED FOR BIDS	FEB 24	MWM

PROJECT ENGINEER: K. BARRETT
DESIGNED BY: L. BOBIER
DRAWN BY: S. LEPPLA
CHECKED BY: S. MANZO

IF THIS BAR DOES NOT MEASURE 1" THEN DRAWING IS NOT TO FULL SCALE 0 1/2" 1"

COMMONWEALTH OF MASSACHUSETTS
LAURA D. BOBIER
STRUCTURAL
No. 52514
PROFESSIONAL ENGINEER
4/19/2024

Hazen
HAZEN AND SAWYER
100 GREAT MEADOW ROAD, SUITE 702
WETHERSFIELD, CT 06109

SPRINGFIELD WATER AND SEWER COMMISSION

WEST PARISH WATER TREATMENT PLANT

FILED SUB-BID

STRUCTURAL STANDARD DETAILS
STRUCTURAL
GENERAL NOTES - SHEET 1

DATE: FEBRUARY 2024
HAZEN NO.: 90398-004
CONTRACT NO.: 24-51
DRAWING NUMBER: S-001

Autodesk Docs://90398-004_West Parish Filter WTF/90398-004-General-Stru.rvt
4/19/2024 7:15:36 AM

STRUCTURAL METALS

M-1 DETAIL, FABRICATE, AND ERECT STRUCTURAL STEEL IN ACCORDANCE WITH ANSI/AISC 360 SPECIFICATION FOR STRUCTURAL STEEL BUILDINGS, LATEST EDITION.

M-2 STEEL MATERIAL:

A) STRUCTURAL HSS:	ASTM A500, GRADE C (46/50 KSI) OR A1085 GRADE A (50 KSI)
B) STRUCTURAL PIPE:	ASTM A53, GRADE B (35 KSI)
C) PLATES, BARS AND ANGLES:	ASTM A36 UNO (36 KSI)
D) STRUCTURAL W, C, & MC SHAPES:	ASTM A992 (50 KSI)
E) STRUCTURAL M & S SHAPES:	ASTM A36 (36 KSI)
F) STRUCTURAL HP	ASTM A572 GRADE 50 (50 KSI)
G) ANCHOR RODS	ASTM F1554 GRADE 55 (55 KSI)

M-3 PROVIDE MINIMUM 3/4" DIAMETER ASTM F3125 GRADE A325 TYPE 1 OR GRADE F1852 TYPE 1 HIGH STRENGTH BOLTS WITH SNUG TIGHTENED TYPE N CONNECTIONS FOR STRUCTURAL STEEL UNLESS NOTED OTHERWISE. HOLES FOR BOLTS SHALL BE STANDARD SIZE UNLESS NOTED OTHERWISE.

M-4 PROVIDE TYPICAL STEEL BEAM CONNECTIONS FOR A CAPACITY OF NOT LESS THAN ONE HALF OF THE TOTAL UNIFORM LOAD CAPACITY TABULATED IN THE AISC TABLES FOR ALLOWABLE LOADS OF BEAMS UNLESS NOTED OTHERWISE.

M-5 DO NOT PAINT STEEL SURFACES WHICH ARE TO BE WELDED OR ARE TO BE ENCASED IN CONCRETE.

M-6 ALL STAINLESS STEEL FABRICATIONS EXPOSED TO UNDERWATER SERVICE SHALL BE TYPE 316. ALL OTHER STAINLESS STEEL FABRICATIONS SHALL BE TYPE 304 UNLESS NOTED OTHERWISE.

M-7 ALUMINUM SHALL BE ALLOY 6061-T6 UNLESS NOTED OTHERWISE.

M-8 ALL BOLTS, ANCHORS, AND CONCRETE ANCHORS CONNECTING ALUMINUM SHALL BE STAINLESS STEEL TYPE 316 FOR UNDERWATER APPLICATIONS AND TYPE 304 FOR ALL OTHER APPLICATIONS.

M-9 ALUMINUM SHALL BE ISOLATED FROM CONTACT WITH CONCRETE AND DISSIMILAR METALS.

M-10 ALL GROOVE AND BUTT WELDS SHALL BE FULL PENETRATION.

M-11 FILLET WELD SIZES SHALL NOT BE LESS THAN THE MINIMUM SIZE REQUIRED BY AISC CODE FOR PLATE SIZES TO BE CONNECTED AND SHALL BE APPLIED TO THE ENTIRE JOINT CONTACT LENGTH, AND NOT LESS THAN 3/16".

M-12 ALL WELDS SHALL BE PERFORMED IN THE SHOP UNLESS NOTED BY A FIELD WELD SYMBOL OR APPROVED BY ENGINEER.

M-13 BOTTOM SURFACES OF BASE PLATES SHALL BE GROUTED TO ENSURE FULL BEARING CONTACT WITH CONCRETE SLAB.

M-14 WHENEVER ONE MEMBER IS FASTENED TO ANOTHER WITH FASTENINGS (BOLTS, WELDS, ETC.) SET AT A UNIFORM SPACING, A MINIMUM OF TWO FASTENINGS PER PIECE SHALL BE CONNECTED AND THE FIRST AND LAST FASTENINGS SHALL BE LOCATED NOT TO EXCEED 0.25 OF FASTENER SPACING FROM EACH END.

M-15 GRATING PANELS SHALL BE CONFINED TO PREVENT MOVEMENT PER STANDARD DETAIL S-05-0706. USE OF GRATING CLIP ATTACHMENT IS NOT ACCEPTABLE TO PREVENT GRATING MOVEMENT.

M-16 FILED SUB BID IS REQUIRED FOR MISCELLANEOUS AND ORNAMENTAL IRON. SEE SPECIFICATION 05 00 00.

STEEL JOISTS

SJ-1 SEE SPECIFICATION SECTION 05 21 00 FOR STEEL BAR JOISTS. STEEL BAR JOIST DRAWINGS AND CALCULATIONS, FOR MEMBERS, CONNECTIONS, BLOCKING, AND BRACING SHALL BE SEALED BY PROFESSIONAL ENGINEER REGISTERED IN THE COMMONWEALTH OF MASSACHUSETTS.

SJ-2 STEEL JOISTS SHALL BE DESIGNED PER THE MASSACHUSETTS STATE BUILDING CODE USING THE LOADS PROVIDED. LOAD COMBINATIONS SHALL BE AS REQUIRED BY ASCE 7.

SJ-3 JOIST MANUFACTURER SHALL PROVIDE BLOCKING AND BRACING AS REQUIRED FOR LATERAL STABILITY OF JOISTS. PROVIDE BOTTOM CHORD BRACING AS REQUIRED FOR WIND UPLIFT. METAL DECKING PROVIDES LATERAL BRACING FOR JOIST TOP CHORDS.

SJ-4 COORDINATE PIPE, LIGHTING, DUCT, AND OTHER UTILITY SUPPORTS ATTACHED TO JOIST WITH JOIST MANUFACTURER.

MASONRY

MA-1 MASONRY MORTAR SHALL BE ASTM C 270 TYPE "S" AND MASONRY GROUT SHALL CONFORM TO REQUIREMENTS OF ASTM C 476.

MA-2 CONCRETE MASONRY UNIT NET AREA COMPRESSIVE STRENGTH SHALL BE 2,000 PSI WHEN TESTED IN ACCORDANCE WITH ASTM C 140. COMPLETE TEST REPORTS SHALL BE SUBMITTED TO THE BUILDING INSPECTOR.

MA-3 HORIZONTAL JOINT REINFORCEMENT SHALL BE AS SHOWN ON ARCHITECTURAL DRAWINGS. HORIZONTAL JOINT REINFORCEMENT SHALL CONFORM TO ASTM A 951 AND REINFORCEMENT STEEL SHALL CONFORM TO REQUIREMENTS OF ASTM A 615 FOR GRADE 60 BILLET STEEL.

MA-4 EXTERIOR CONCRETE MASONRY UNIT WALLS SHALL BE REINFORCED AS INDICATED IN TABLE. ALL REINFORCING SHALL BE PLACED IN FULLY GROUTED CELLS, UNLESS SHOWN OTHERWISE ON DRAWINGS.

MA-5 VERTICAL REINFORCEMENT SHALL BE PROVIDED AT WALL ENDS, CORNERS, AND INTERSECTIONS AND IMMEDIATELY ADJACENT TO ALL OPENINGS, CONTROL JOINTS, AND COLUMNS. SEE STANDARD DETAILS FOR MASONRY OPENINGS.

MA-6 MASONRY REINFORCEMENT LAP SPLICES SHALL BE CONTACT SPLICES. UNLESS NOTED OTHERWISE, LENGTH OF SPLICE FOR SINGLE BARS IN CENTER OF CELLS OF 8" OR LARGER CMU SHALL BE A MINIMUM OF 25 INCHES FOR #4 BARS, 32 INCHES FOR #5 BARS, AND 50 INCHES FOR #6 BARS. LENGTH OF SPLICE FOR OTHER CONDITIONS SHALL BE AS SHOWN ON THE DRAWINGS.

MA-7 BOND BEAM REINFORCEMENT SHALL BE CONTINUOUS AT ALL WALL INTERSECTIONS, SEE STANDARD DETAILS. WHERE BOND BEAM REINFORCEMENT IS INTERRUPTED BY OPENINGS REINFORCEMENT SHALL BE PROVIDED WITH 90° HOOKS AT EACH ENDS. BOND BEAM REINFORCEMENT SHALL BE 2-#5 BARS UNLESS OTHERWISE INDICATED.

MA-8 DOWELS SHALL BE EITHER CAST INTO CONCRETE OR INSTALLED WITH A DOWEL ADHESIVE SYSTEM. IF CAST, DOWELS SHALL BE EMBEDDED IN STEM WALL OR FOUNDATION SLAB A MINIMUM 9" AND SHALL HAVE A STD 90° HOOK. IF INSTALLED WITH A DOWEL ADHESIVE SYSTEM DOWELS SHALL BE STRAIGHT BARS EMBEDDED A MINIMUM OF 10" INTO CONCRETE. FOR CMU WALL AT CONCRETE BEAM, DOWELS SHALL BE CAST IN CONCRETE UNLESS ADHESIVE DOWELS ARE APPROVED BY ENGINEER. FOR CMU WALL AT CONCRETE CURB, CURB HEIGHT SHALL NOT BE INCLUDED IN DOWEL MINIMUM EMBEDMENT.

MA-9 MASONRY LINTELS SHALL BE EITHER PRECAST CONCRETE "U" SECTIONS OR CONCRETE MASONRY "U" BLOCKS UNLESS SHOWN OTHERWISE.

MA-10 FOR CONCRETE MASONRY "U" BLOCK LINTELS SEE STANDARD DETAILS FOR MASONRY OPENINGS AND THE CMU OPENING REINFORCEMENT SCHEDULE, UNLESS OTHERWISE NOTED ON DRAWINGS.

1

MA-11 FILED SUB-BID MASONRY SUBCONTRACTOR SHALL FURNISH AND INSTALL MASONRY. SEE SPECIFICATION 04 00 00.

PARAMETER / STRUCTURE	EXTERIOR WALL REINF	EXTERIOR TOP OF WALL CONNECTION	INTERIOR WALL REINF	INTERIOR TOP OF WALL CONNECTION	PARAPET WALL REINF
WATER TREATMENT BUILDING -ADMIN AREA	N/A	N/A	#5@48" OC	FOR WALL DIRECTLY BENEATH CONC BEAM OR SLAB, TOP OF WALL CONNECTION SHALL BE PARTITION TOP ANCHORS MAX SPACING 48". ALL OTHER WALLS, NO CONNECTION REQUIRED AT TOP OF WALL	N/A
WATER TREATMENT BUILDING -PROCESS AREA (WEST)	#5@32" OC	S-04-0106 TYPE I OR TYPE II MAX PLATE SPACING 2'-8"	FOR WALLS WITH CONNECTION AT TOP OF WALL, #5@48" OC. FOR ALL OTHER WALLS, #5#32" OC	FOR WALL DIRECTLY BENEATH CONC BEAM OR SLAB, TOP OF WALL CONNECTION SHALL BE PARTITION TOP ANCHORS MAX SPACING 48". ALL OTHER WALLS, NO CONNECTION REQUIRED AT TOP OF WALL	#5@32" OC
WATER TREATMENT BUILDING -PROCESS AREA (CHEMICAL)	#5@32" OC	S-04-0106 TYPE II MAX PLATE SPACING 2'-0"	#5@48" OC	ALL WALLS SHALL BE ATTACHED AT TOP OF WALL. FOR WALLS ATTACHING TO HOLLOW CORE PLANKS, ATTACH PER S-04-0109. FOR ALL OTHER WALLS, AT PARTITION TOP ANCHORS MAX SPACING 48"	#5@32" OC
WATER TREATMENT BUILDING -PROCESS AREA (FILTERS)	#5@32" OC	S-04-0106 TYPE I OR TYPE II MAX PLATE SPACING 2'-8"	FOR WALLS WITH CONNECTION AT TOP OF WALL, #5@48" OC. FOR ALL OTHER WALLS, #5#32" OC	FOR WALL DIRECTLY BENEATH CONC BEAM OR SLAB, TOP OF WALL CONNECTION SHALL BE PARTITION TOP ANCHORS MAX SPACING 48". ALL OTHER WALLS, NO CONNECTION REQUIRED AT TOP OF WALL	#5@32" OC
DEWATERING BUILDING	#5@32" OC	S-04-0106 TYPE I MAX PLATE SPACING 2'-0"	FOR WALLS WITH CONNECTION AT TOP OF WALL, #5@48" OC. FOR ALL OTHER WALLS, #5#32" OC	FOR WALL DIRECTLY BENEATH CONC BEAM OR SLAB, TOP OF WALL CONNECTION SHALL BE PARTITION TOP ANCHORS MAX SPACING 48". ALL OTHER WALLS, NO CONNECTION REQUIRED AT TOP OF WALL	#5@32" OC

DEMOLITION

D-1 FOR DEMOLITION REQUIREMENTS, REFER TO SPECIFICATION 01 73 00 - DEMOLITION AND EXECUTION OF WORK AND 02 41 00 DEMOLITION.

D-2 CONCRETE DEMOLITION WITHIN STRUCTURES BEING MODIFIED SHALL BE SELECTIVE DEMOLITION BY CORE DRILLING OR SAWCUTTING AND CAREFUL REMOVAL OF CONCRETE SHOWN TO BE REMOVED. NO OVER CUTTING OF AREAS TO BE DEMOLISHED SHALL BE PERMITTED. CONTRACTOR SHALL CORE DRILL CORNERS OF OPENING PRIOR TO SAWCUTTING. EXPLOSIVES AND VIBRATORY HAMMERS SHALL NOT BE USED FOR DEMOLITION WORK.

D-3 UNLESS ANCHORING DEVICES AND/OR REINFORCEMENT IS NOTED TO REMAIN FOLLOWING DEMOLITION, REMOVE AND/OR BURN BACK ANCHORS AND REINFORCEMENT STEEL 1/2" MIN BELOW SURFACE AND VOIDS CREATED SHALL BE FILLED WITH EPOXY RESIN BINDER.

D-4 EMBEDDED CONDUIT ENCOUNTERED DURING DEMOLITION WORK LIMITS SHALL BE PERMANENTLY REROUTED AS NECESSARY. CONTRACTOR SHALL SUBMIT PROPOSED MEANS OF REROUTING ANY INTERFERING CONDUIT.

D-5 WHERE DRAWINGS INDICATE A CONCRETE EQUIPMENT PAD TO BE DEMOLISHED, THE FLOOR SLAB SURFACE SHALL BE REPAIRED AS APPROVED BY ENGINEER. FOLLOWING SELECT DEMOLITION AND REMOVAL OF THE EQUIPMENT PAD REMOVAL THE REPAIR SHALL BE:
A. SAWCUT THE FLOOR AROUND THE EQUIPMENT PAD PERIMETER TO A DEPTH OF 1/4".
B. SCARIFY AND REMOVE SLAB CONCRETE WITHIN THE PERIMETER TO A NOMINAL 1/4" DEPTH CLEAN AND REMOVE ALL CONCRETE LAITANCE.
C. RESURFACE THE AREA BY APPLYING A POLYMER MODIFIED OR SILICA FUME ENHANCED CEMENTITIOUS REPAIR MORTAR, APPROVED BY THE ENGINEER, FOLLOWING THE MANUFACTURER'S SURFACE PREPARATION AND APPLICATION RECOMMENDATIONS. LEVEL AND FINISH THE SURFACE TO MATCH THE FLOOR SLAB SURROUNDING AREA.

D-6 PRIOR TO DEMOLITION OF SMALL OPENINGS (LESS THAN 6 INCHES IN SIZE) FOR PENETRATIONS, ETC., CONTRACTOR SHALL USE NON-DESTRUCTIVE MEANS TO FIELD LOCATE REINFORCEMENT. OPENINGS SHALL BE LOCATED TO AVOID CUTTING THROUGH EXISTING REINFORCEMENT, IF POSSIBLE. EXISTING REINFORCEMENT SHALL NOT BE CUT WITHOUT APPROVAL OF ENGINEER.

D-7 CONCRETE SURFACES LEFT EXPOSED FOLLOWING DEMOLITION SHALL BE SEALED WITH EPOXY RESIN COATING SUCH AS DURALKOTE 240 BY EUCLID CHEMICAL, OR APPROVED EQUAL.

D-8 DETAILED CONSTRUCTION AND DEMOLITION PLAN SHALL BE SUBMITTED TO THE ENGINEER AND APPROVED BY THE ENGINEER AND OWNER PRIOR TO BEGINNING CONSTRUCTION. ANY SHUTDOWNS SHALL BE SUBMITTED TO, COORDINATED WITH, AND APPROVED BY THE OWNER. ONCE APPROVED, CONTRACTOR SHALL PROVIDE A MINIMUM OF THREE (3) WEEKS NOTICE TO OWNER PRIOR TO SHUTDOWN.

NONSTRUCTURAL COMPONENT ANCHORAGE AND BRACING

1

A-1 ANCHORAGE AND BRACING SHALL BE PROVIDED FOR NONSTRUCTURAL COMPONENTS IN ACCORDANCE WITH SPECIFICATION 01 73 23 - ANCHORAGE AND BRACING OF NONSTRUCTURAL COMPONENTS. "NONSTRUCTURAL COMPONENTS" INCLUDES ALL ARCHITECTURAL, MECHANICAL, ELECTRICAL, AND PLUMBING ELEMENTS OR SYSTEMS (AND THEIR SUPPORTS OR ATTACHMENTS) WHICH ARE PERMANENTLY ATTACHED TO A SUPPORTING STRUCTURE. DESIGN OF ANCHORAGE AND BRACING SHALL BE PROVIDED BY ENGINEER CURRENTLY REGISTERED IN THE COMMONWEALTH OF MASSACHUSETTS UNLESS SPECIFICALLY DETAILED ON THE CONTRACT DRAWINGS.

A-2 ANCHORAGE AND BRACING OF ALL NONSTRUCTURAL COMPONENTS SHALL BE DESIGNED AND INSTALLED TO RESIST THE CONTROLLING LOAD COMBINATION OF GRAVITY LOADS, OPERATIONAL FORCES, WIND FORCES, SEISMIC FORCES, AND ANY OTHER APPLICABLE FORCES IN ACCORDANCE WITH THE GOVERNING BUILDING CODE. WIND AND SEISMIC FORCES SHALL BE AS PER ASCE 7. COMPONENTS SHALL BE BOLTED, WELDED, OR OTHERWISE POSITIVELY FASTENED WITHOUT CONSIDERATION OF FRICTIONAL RESISTANCE PRODUCED BY THE EFFECTS OF GRAVITY. A CONTINUOUS LOAD PATH OF SUFFICIENT STRENGTH AND STIFFNESS TO RESIST REQUIRED FORCES SHALL BE PROVIDED BETWEEN THE COMPONENT AND THE SUPPORTING STRUCTURE. ANCHORAGE AND BRACING SHALL BE DESIGNED TO RESIST LOADS IN BOTH ORTHOGONAL DIRECTIONS (TRANSVERSE AND LONGITUDINAL) AND SHALL BE DESIGNED AND SEALED BY AN ENGINEER CURRENTLY REGISTERED IN THE COMMONWEALTH OF MASSACHUSETTS.

A-3 COMPONENT REACTION FORCES AT THE POINT OF ATTACHMENT TO THE STRUCTURE SHALL BE SUBMITTED TO AND COORDINATED WITH THE ENGINEER FOR CONFIRMATION THAT SUPPORTING STRUCTURE IS ADEQUATE TO RESIST REQUIRED REACTION FORCES.

A-4 CONTRACTOR SHALL PROVIDE SPECIAL SEISMIC CERTIFICATION (SSC) FROM MANUFACTURER OF EQUIPMENT FOR ALL SYSTEMS REQUIRED BY SPECIFICATIONS. SPECIAL SEISMIC CERTIFICATION SHALL BE IN COMPLIANCE WITH ASCE 7.

EXISTING INFORMATION

X-1 ALL EXISTING INFORMATION SHOWN ON THESE DRAWINGS INCLUDING LOCATION, DIMENSIONS, ELEVATIONS, AND CONFIGURATIONS IS DERIVED FROM THE LITTLE RIVER WATER SUPPLY ADDITIONS TO PURIFICATIONS WORKS, 1924-1925, CONTRACT 54 ADDITIONAL WEST PARISH FILTERS, AUGUST 1967, AND CONTRACT 70, ADDITIONS TO FILTERS NO. 7 AND 9 JANUARY 1972 CONTRACT DRAWINGS AND IS NOT GUARANTEED TO BE COMPLETE OR CORRECT.

X-2 THE CONTRACTOR IS RESPONSIBLE FOR VERIFYING ALL EXISTING INFORMATION IN THE FIELD AS REQUIRED FOR DEMOLITION AND MODIFICATIONS.

SPECIAL INSPECTIONS

SI-1 SPECIAL INSPECTIONS SHALL BE IN ACCORDANCE WITH SPECIFICATIONS AND THE MASSACHUSETTS STATE BUILDING CODE. SEE SPECIFICATION 01 45 33 SPECIAL INSPECTIONS FOR FURTHER INFORMATION.

DELEGATED STRUCTURAL DESIGN ITEMS

DSD-1 THE FOLLOWING ITEMS SHALL BE SUBMITTED AS DELEGATED STRUCTURAL DESIGNS DURING CONSTRUCTION, IN ACCORDANCE WITH THE CONTRACT DRAWINGS AND SPECIFICATIONS.

A. EXCAVATION SUPPORT SYSTEMS
B. PRECAST STRUCTURES
C. PRECAST PLANKS
D. STEEL JOISTS
E. ALUMINUM GUARDS
F. FRP GUARDS, STAIRS, AND PLATFORMS
G. PIPE SUPPORTS, EXCEPT PIPE SUPPORTS SUPPORTING DAFR PIPE, SEE MECH DWGS
H. CANOPY AND CANOPY FOOTINGS
I. ANCHORAGE AND BRACING OF NONSTRUCTURAL COMPONENTS NOT SPECIFICALLY DESIGNED AND DETAILED ON THE CONTRACT DRAWINGS (INCLUDING, BUT NOT LIMITED TO, PIPE SUPPORTS AND EQUIPMENT)

DSD-2 DRAWINGS AND CALCULATIONS FOR EACH ITEM SHALL BE SIGNED AND SEALED BY A PROFESSIONAL ENGINEER REGISTERED IN THE COMMONWEALTH OF MASSACHUSETTS.

REV	ISSUED FOR	DATE	BY
1	ADDENDUM 5	APR 24	MWM
0	ISSUED FOR BIDS	FEB 24	MWM

PROJECT ENGINEER:	K. BARRETT
DESIGNED BY:	L. BOBIER
DRAWN BY:	S. LEPPLA
CHECKED BY:	S. MANZO

IF THIS BAR DOES NOT MEASURE 1" THEN DRAWING IS NOT TO FULL SCALE 0 1/2" 1"

COMMONWEALTH OF MASSACHUSETTS
LAURA D. BOBIER
STRUCTURAL
No. 52514
PROFESSIONAL ENGINEER
4/18/2024

Hazen
HAZEN AND SAWYER
100 GREAT MEADOW ROAD, SUITE 702
WETHERSFIELD, CT 06109

SPRINGFIELD WATER AND SEWER COMMISSION

WEST PARISH WATER TREATMENT PLANT

FILED SUB-BID

STRUCTURAL STANDARD DETAILS
STRUCTURAL
GENERAL NOTES - SHEET 2

DATE:	FEBRUARY 2024
HAZEN NO.:	90398-004
CONTRACT NO.:	24-51
DRAWING NUMBER:	S-002

Autodesk Docs://90398-004_West Parish Filter WTF/90398-004-General-Stru.rvt
4/18/2024 1:13:52 PM

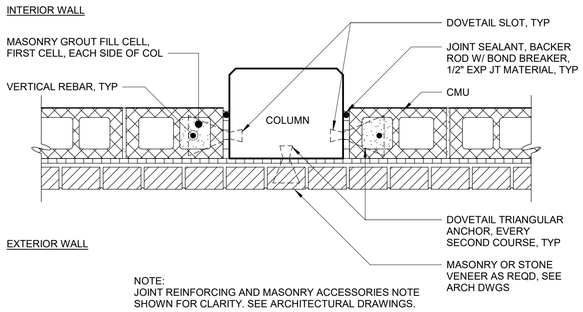

NOTE:
JOINT REINFORCING AND MASONRY ACCESSORIES NOTE SHOWN FOR CLARITY. SEE ARCHITECTURAL DRAWINGS.

MASONRY TIE-IN AT COLUMN

S-04-0103

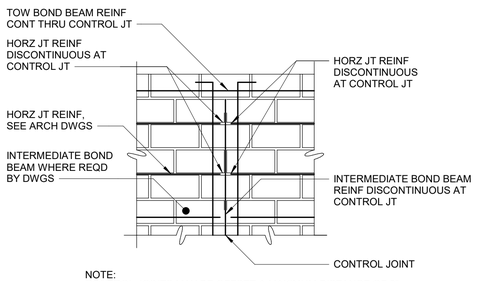

NOTE:
CONTROL JOINTS MAY BE OFFSET A MAXIMUM DISTANCE OF 8".
HORIZONTAL JOINT REINFORCING WITHIN THIS OFFSET SHALL BE CUT.

ELEVATION

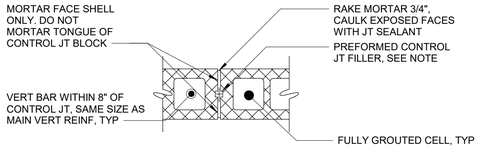

PLAN

NOTE:
WIDE FLANGED PREFORMED CONTROL JOINT FILLER MAY BE USED.

CONTROL JOINT BLOCK

S-04-0105

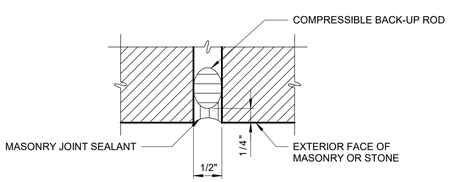

MASONRY OR STONE EXPANSION JOINT

S-04-0108

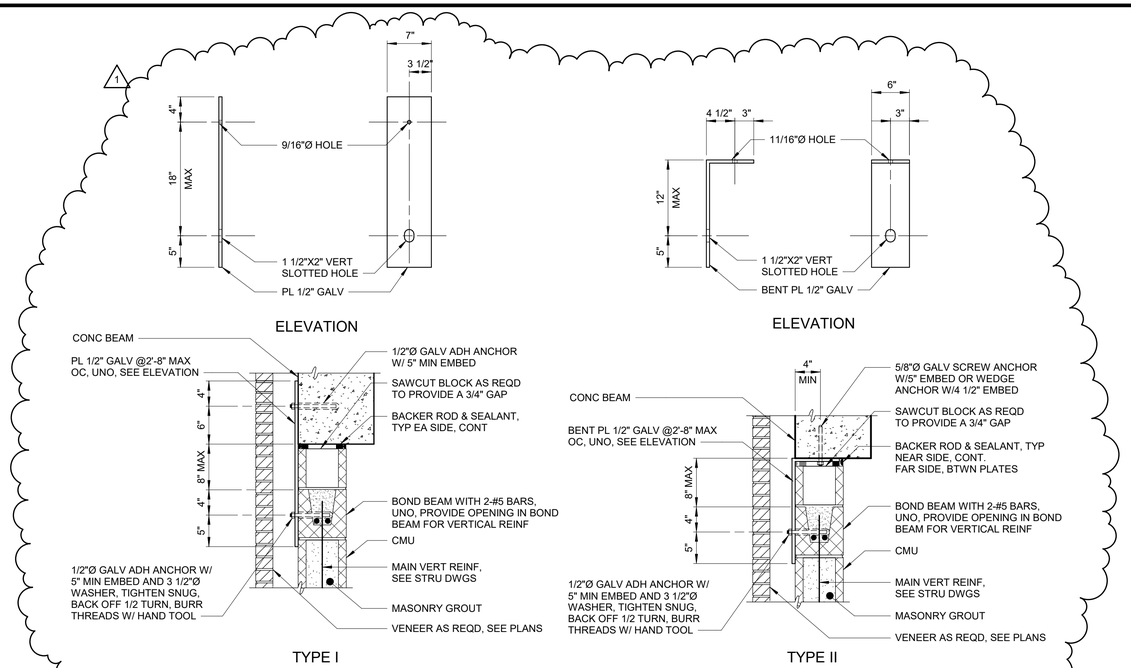

ULTIMATE CAPACITY FOR EACH PLATE CONNECTION (LBS)			
PLATE SPACING	+ WIND (APPLIED FORCE ACTING TOWARD SURFACE)	- WIND (APPLIED FORCE ACTING AWAY FROM SURFACE)	SEISMIC
1'-4"	789	960	676
>=2'-0"	862	980	713

NOTE:
1. HORIZONTAL JOINT REINFORCING AND MASONRY ACCESSORIES NOT SHOWN FOR CLARITY. SEE PLANS AND SPECIFICATIONS.
2. TYPE I SHALL BE USED UNLESS NOTES OTHERWISE.

MASONRY WALL TO CONCRETE BEAM CONNECTION

S-04-0106

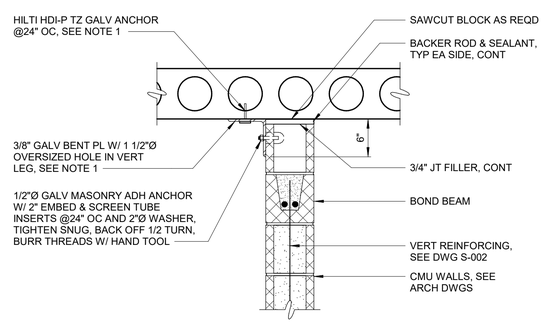

NOTES:
1. ANCHORS SHALL BE LOCATED BENEATH HOLLOW CORES IN PLANKS TO AVOID DAMAGING PRESTRESSING STRANDS. LENGTH OF BENT PLATE HORIZONTAL LEG SHALL BE ADJUSTED AS NEEDED. CONTRACTOR TO FIELD LOCATE AND COORDINATE.

INTERIOR MASONRY WALL TO PRECAST PLANK CONNECTION

S-04-0109

NOTES:

1. FILED SUB-BID MASONRY SUBCONTRACTOR SHALL FURNISH AND INSTALL MASONRY AND STEEL DETAILED ON THIS DRAWING. SEE SPECIFICATION 04 00 00.

REV	ISSUED FOR	DATE	BY
1	ADDENDUM 5	APR 24	MWM
0	ISSUED FOR BIDS	FEB 24	MWM

PROJECT ENGINEER:	K. BARRETT
DESIGNED BY:	L. BOBIER
DRAWN BY:	S. LEPPLA
CHECKED BY:	S. MANZO

IF THIS BAR DOES NOT MEASURE 1" THEN DRAWING IS NOT TO FULL SCALE 0 1/2" 1"

COMMONWEALTH OF MASSACHUSETTS
LAURA D. BOBIER
STRUCTURAL
No. 52514
REGISTERED PROFESSIONAL ENGINEER
4/18/2024

Hazen

HAZEN AND SAWYER
100 GREAT MEADOW ROAD, SUITE 702
WETHERSFIELD, CT 06109

SPRINGFIELD WATER AND SEWER COMMISSION

WEST PARISH WATER TREATMENT PLANT

FILED SUB-BID

STRUCTURAL STANDARD DETAILS
SHEET 5

DATE:	FEBRUARY 2024
HAZEN NO.:	90398-004
CONTRACT NO.:	24-51
DRAWING NUMBER:	S-007

Autodesk Docs://90398-004_West Parish Filter WTF/90398-004-General-Stru.rvt
4/19/2024 2:20:46 PM

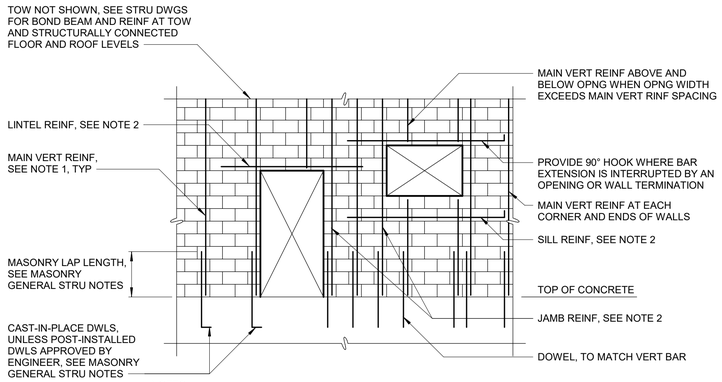

NOTES:
1. FOR MAIN VERTICAL REINFORCING, SEE STRUCTURAL DRAWINGS. PROVIDE 90 DEGREE HOOK AT TOP OF WALL UNLESS NOTED OTHERWISE.
2. FOR LINTEL AND REINFORCING AT OPENINGS, SEE DETAIL S-04-0202.
3. JOINT REINFORCING NOT SHOWN FOR CLARITY. SEE ARCHITECTURAL DRAWINGS.

TYPICAL MASONRY REINFORCING ELEVATION

S-04-0201

CMU OPENING REINFORCEMENT SCHEDULE

1

"W" OPNG WIDTH	LINTEL DEPTH	LINTEL STIRRUP	"A" BAR LINTEL	"B" BAR JAMB	"J" MIN JAMB WIDTH
UP TO 2'-8"	8", SEE NOTE 1	-	#5 BAR	1-#5 BAR, 1 BAR EA CELL	8"
>2'-8" <= 4'-0"	8", SEE NOTE 1	-	2-#5 BARS	1-#5 BAR, 1 BAR EA CELL	8"
>4'-0" <= 6'-0"	16"	#3@8"	2-#5 BARS	2-#5 BAR, 1 BAR EA CELL	16"
>6'-0" <= 8'-0"	24"	#3@8"	2-#5 BARS	2-#5 BAR, 1 BAR EA CELL	16"
>8'-0" <= 14'-0"	32"	#3@8"	2-#6 BARS	6-#5 BAR, 2 BAR EA CELL	24"

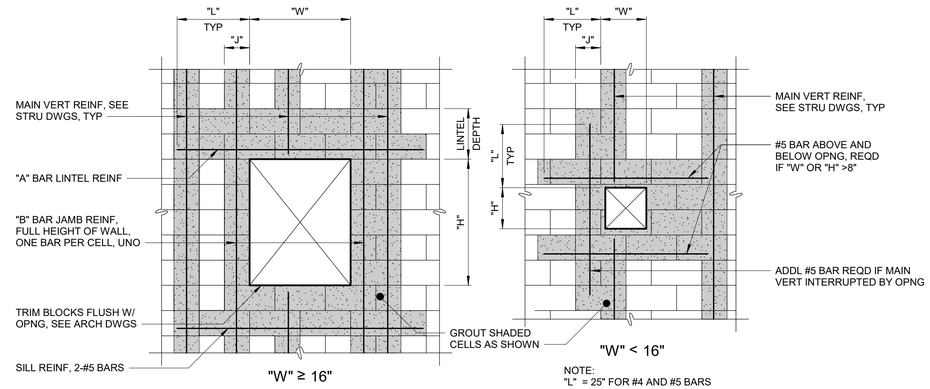

"W" ≥ 16"

NOTE:
"L" = 25" FOR #4 AND #5 BARS
"L" = 30 INCHES FOR #6 BARS
WHERE "L" DISTANCE CANNOT BE PROVIDED, HOOK "A" BARS 90 DEGREES AT ENDS

"W" < 16"

NOTE:
"L" = 25" FOR #4 AND #5 BARS
"L" = 30 INCHES FOR #6 BARS
WHERE "L" DISTANCE CANNOT BE PROVIDED, HOOK "A" BARS 90 DEGREES AT ENDS

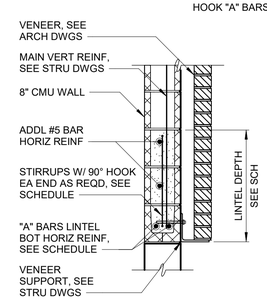

8" LINTEL SECTION

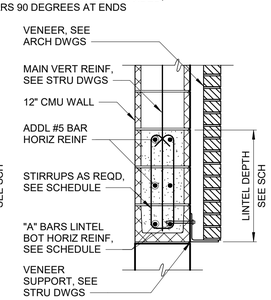

12" LINTEL SECTION

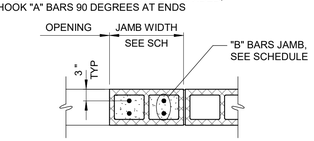

JAMB PLAN W/TWO BARS IN CELL

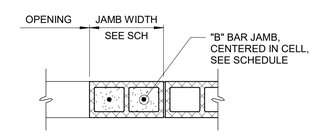

JAMB PLAN W/ONE BAR IN CELL

NOTES:

1. VENEER SUPPORT REQUIRED AT STONE AND SPLIT FACE VENEER. SEE ARCHITECTURAL DRAWINGS. WHERE VENEER SUPPORT IS REQUIRED, MINIMUM CMU LINTEL DEPTH SHALL BE 16".
2. AT STONE, VENEER SUPPORT AT HEAD SHALL BE GALVANIZED STEEL L8X8X1/2 WITH 1/2" DIAMETER GALVANIZED ADHESIVE ANCHORS AT 16" ON CENTER, 6" MINUMUM CONCRETE EDGE DISTANCE, AND 4 1/2" MINIMUM EMBEDMENT (MIN 3 ANCHORS PER ANGLE). PROVIDE 1 1/2" STEEL EDGE DISTANCE IN LEG FOR ANCHOR HOLE. ANGLE SHALL EXTEND 8" BEYOND OPENINGS.
3. AT STONE AND UNLESS NOTED OTHERWISE, VENEER SUPPORT AT JAMB SHALL BE GALVANIZED STEEL L8X6X7/16 WITH 3/8" DIAMETER GALVANIZED ADHESIVE ANCHORS AT 32" ON CENTER AND 3 3/8" MINIMUM EMBEDMENT (MIN 2 ANCHORS PER ANGLE). PROVIDE 1 1/2" STEEL EDGE DISTANCE IN 6" LEG FOR ANCHOR HOLE.
4. AT SPLIT FACE, VENEER SUPPORT AT HEAD SHALL BE 3/8" X 7 1/2 " X 7 1/2" GALVANIZED STEEL BENT PLATE WITH 1/2" DIAMETER GALVANIZED ADHESIVE ANCHORS AT 16" ON CENTER, 6" MINUMUM CONCRETE EDGE DISTANCE, AND 4 1/2" MINIMUM EMBEDMENT (MIN 3 ANCHORS PER BENT PLATE). PROVIDE 1 1/2" STEEL EDGE DISTANCE IN LEG FOR ANCHOR HOLE. BENT PLATE SHALL EXTEND 8" BEYOND OPENINGS.
5. AT SPLIT FACE AND UNLESS NOTED OTHERWISE, VENEER SUPPORT AT JAMB SHALL BE 3/8" X 5" X 7 1/2" GALVANIZED STEEL BENT PLATE WITH 3/8" DIAMETER GALVANIZED ADHESIVE ANCHORS AT 32" ON CENTER AND 3 3/8" MINIMUM EMBEDMENT (MIN 2 ANCHORS PER BENT PLATE). PROVIDE 1 1/2" STEEL EDGE DISTANCE IN 5" LEG FOR ANCHOR HOLE.

TYPICAL MASONRY OPENINGS

S-04-0202

2

NOTES:

1. FILED SUB-BID MASONRY SUBCONTRACTOR SHALL FURNISH AND INSTALL MASONRY AND STEEL DETAILED ON THIS DRAWING. SEE SPECIFICATION 04 00 00.

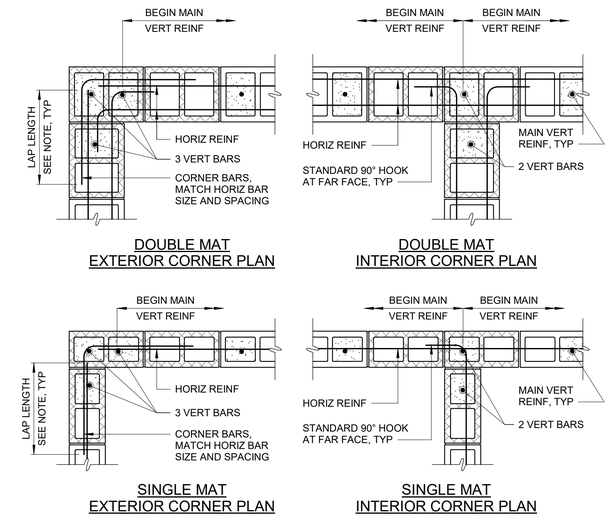

DOUBLE MAT EXTERIOR CORNER PLAN

DOUBLE MAT INTERIOR CORNER PLAN

SINGLE MAT EXTERIOR CORNER PLAN

SINGLE MAT INTERIOR CORNER PLAN

NOTES:
1. SEE MASONRY GENERAL STRUCTURAL NOTES FOR LAP SPLICE LENGTH REQUIREMENTS.
2. DETAIL APPLIES TO BOND BEAM HORIZONTAL REINFORCING.

TYPICAL MASONRY WALL INTERSECTION REINFORCING

S-04-0203

REV	ISSUED FOR	DATE	BY
2	ADDENDUM 5	APR 24	MWM
1	ADDENDUM 4	APR 24	MWM
0	ISSUED FOR BIDS	FEB 24	MWM

PROJECT ENGINEER:	K. BARRETT
DESIGNED BY:	L. BOBIER
DRAWN BY:	S. LEPPLA
CHECKED BY:	S. MANZO

IF THIS BAR DOES NOT MEASURE 1" THEN DRAWING IS NOT TO FULL SCALE 0 1/2" 1"

COMMONWEALTH OF MASSACHUSETTS LAURA D. BOBIER STRUCTURAL No. 52514 REGISTERED PROFESSIONAL ENGINEER 4/18/2024

Hazen

HAZEN AND SAWYER
100 GREAT MEADOW ROAD, SUITE 702
WETHERSFIELD, CT 06109

SPRINGFIELD WATER AND SEWER COMMISSION

WEST PARISH WATER TREATMENT PLANT

2 FILED SUB-BID

STRUCTURAL STANDARD DETAILS
SHEET 6

DATE:	FEBRUARY 2024
HAZEN NO.:	90398-004
CONTRACT NO.:	24-51
DRAWING NUMBER:	S-008

Autodesk Docs://90398-004_West Parish Filter WTF/90398-004-General-Stru.rvt
4/19/2024 2:18:47 PM

NOTES:

1. FABRICATION AND INSTALLATION OF METAL WORK SHOWN ON THIS DRAWING SHALL BE FILED SUB-BID AND SHALL BE WORK OF MISCELLANEOUS AND ORNATMENTAL IRON SUBCONTRACTOR. SEE SPECIFICATION 05 00 00.

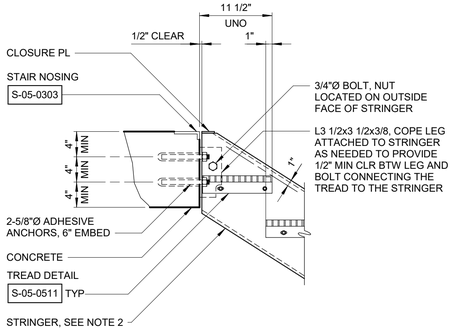

UPPER STRINGER CONNECTION TO CONCRETE

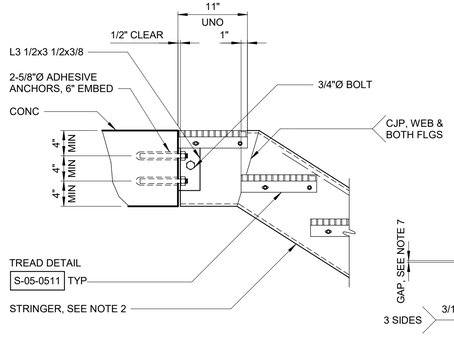

UPPER CRIPPLED STRINGER CONNECTION TO CONCRETE

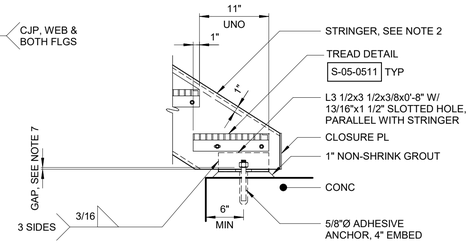

LOWER STRINGER CONNECTION TO CONCRETE SLAB

NOTES:
1. PROVIDE PROTECTION FOR DISSIMILAR METALS AND CONCRETE PER SPECIFICATIONS.
2. FOR ALUMINUM STAIRS, C12x10.4 STRINGERS ARE TYPICAL UNLESS NOTED OTHERWISE. FOR CARBON STEEL STAIRS, C12x20.7 STRINGERS ARE TYPICAL UNLESS NOTED OTHERWISE.
3. STAIR GUARDS AND TOEBOARD NOT SHOWN FOR CLARITY.
4. BOLTS FOR ALUMINUM STAIRS SHALL BE STAINLESS STEEL, UNLESS NOTED OTHERWISE. BOLTS FOR CARBON STEEL STAIRS SHALL BE GRADE A325, UNLESS NOTED OTHERWISE.
5. FIELD VERIFY ALL DIMENSIONS AND ELEVATIONS PRIOR TO FABRICATION.
6. CLOSURE PLATES, ANGLES AND OTHER APPURTENANCES SHALL MATCH STRINGER MATERIAL.
7. PROVIDE 1/4" GAP BETWEEN BOTTOM OF NUT AND TOP SURFACE OF HORIZONTAL LEG OF ANGLE. TACK WELD NUT TO ADHESIVE ANCHOR.

PINNED METAL STAIRS
S-05-0513

SPAN, S	DEPTH (MIN)	CONCRETE ANCHOR (SIZE AND SPACING)
0'-0"< S ≤ 4'-0"	1 1/2"	1/2"Øx5 1/2" @ 18"
4'-0"< S ≤ 5'-0"	1 3/4"	5/8"Øx6" @ 18"
5'-0"< S ≤ 5'-6"	2"	
5'-6"< S ≤ 6'-0"	2 1/4"	
6'-0"< S ≤ 6'-6"	2 1/2"	

SCHEDULE BASED ON 150 PSF

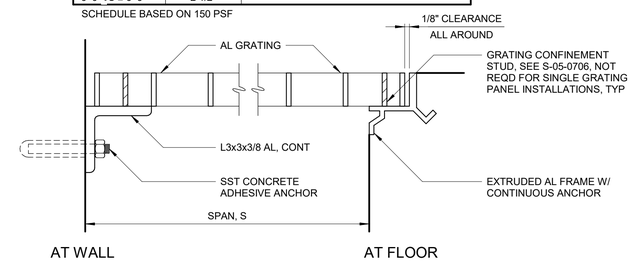

ALUMINUM GRATING
S-05-0701

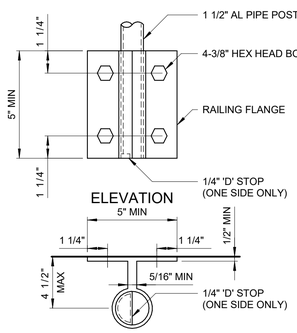

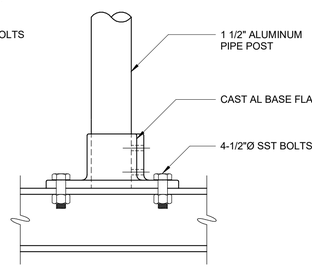

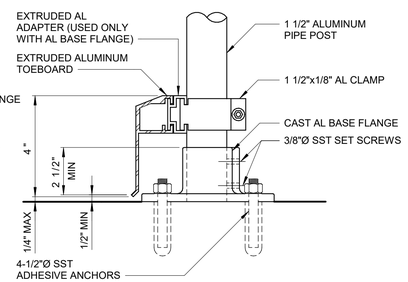

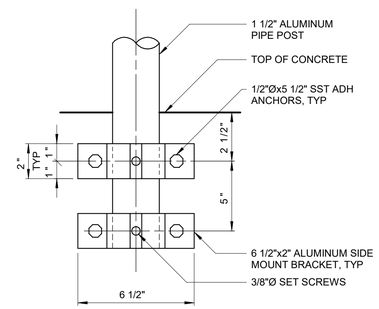

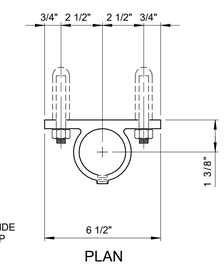

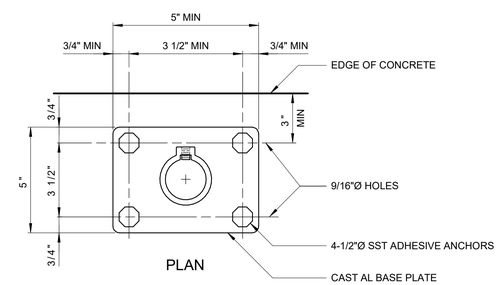

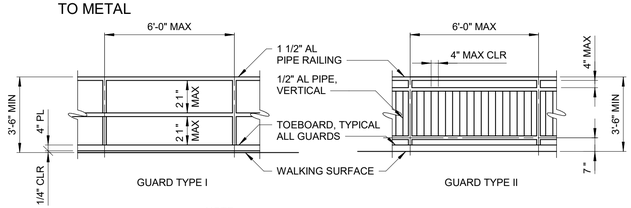

NOTE:
UNLESS SHOWN OTHERWISE ON THE CONTRACT DRAWING, GUARDS SHALL BE TYPE I.

ELEVATION

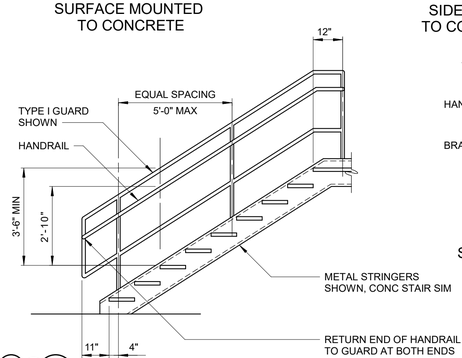

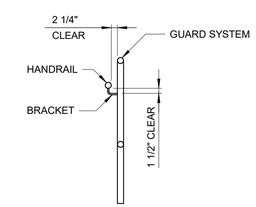

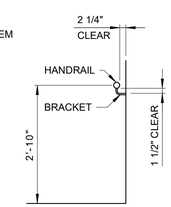

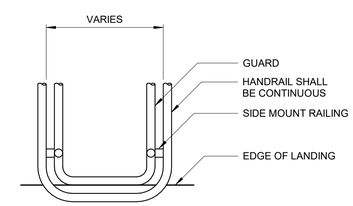

NOTE:
DESIGN OF GUARDS AND HANDRAIL SYSTEMS IS EXCLUSIVELY THE RESPONSIBILITY OF THE MISCELLANEOUS AND ORNAMENTAL IRON SUBCONTRACTOR. DETAILS SHOWN ARE MINIMUM REQUIREMENTS FOR MEMBERS AND CONNECTIONS. MISCELLANEOUS AND ORNAMENTAL IRON SUBCONTRACTOR SHALL PROVIDE AND SUBMIT DRAWINGS AND STRUCTURAL CALCULATIONS, BOTH SEALED BY A PROFESSIONAL ENGINEER CURRENTLY REGISTERED IN THE STATE OR COMMONWEALTH WHERE THE PROJECT IS LOCATED. 1

ALUMINUM GUARDS AND HANDRAILS
S-05-0601

REV	ISSUED FOR	DATE	BY
1	ADDENDUM 5	APR 24	MWM
0	ISSUED FOR BIDS	FEB 24	MWM

PROJECT ENGINEER:	K. BARRETT
DESIGNED BY:	L. BOBIER
DRAWN BY:	S. LEPPLA
CHECKED BY:	S. MANZO

IF THIS BAR DOES NOT MEASURE 1" THEN DRAWING IS NOT TO FULL SCALE (0 1/2" 1")

COMMONWEALTH OF MASSACHUSETTS
LAURA D. BOBIER
STRUCTURAL
No. 52514
PROFESSIONAL ENGINEER
4/18/2024

Hazen
HAZEN AND SAWYER
100 GREAT MEADOW ROAD, SUITE 702
WETHERSFIELD, CT 06109

SPRINGFIELD WATER AND SEWER COMMISSION

WEST PARISH WATER TREATMENT PLANT

FILED SUB-BID

STRUCTURAL STANDARD DETAILS
SHEET 10

DATE:	FEBRUARY 2024
HAZEN NO.:	90398-004
CONTRACT NO.:	24-51
DRAWING NUMBER:	S-012

Autodesk Docs://90398-004_West Parish Filter WTF/90398-004-General-Stru.rvt
4/18/2024 3:04:48 PM

PLANT NORTH
N

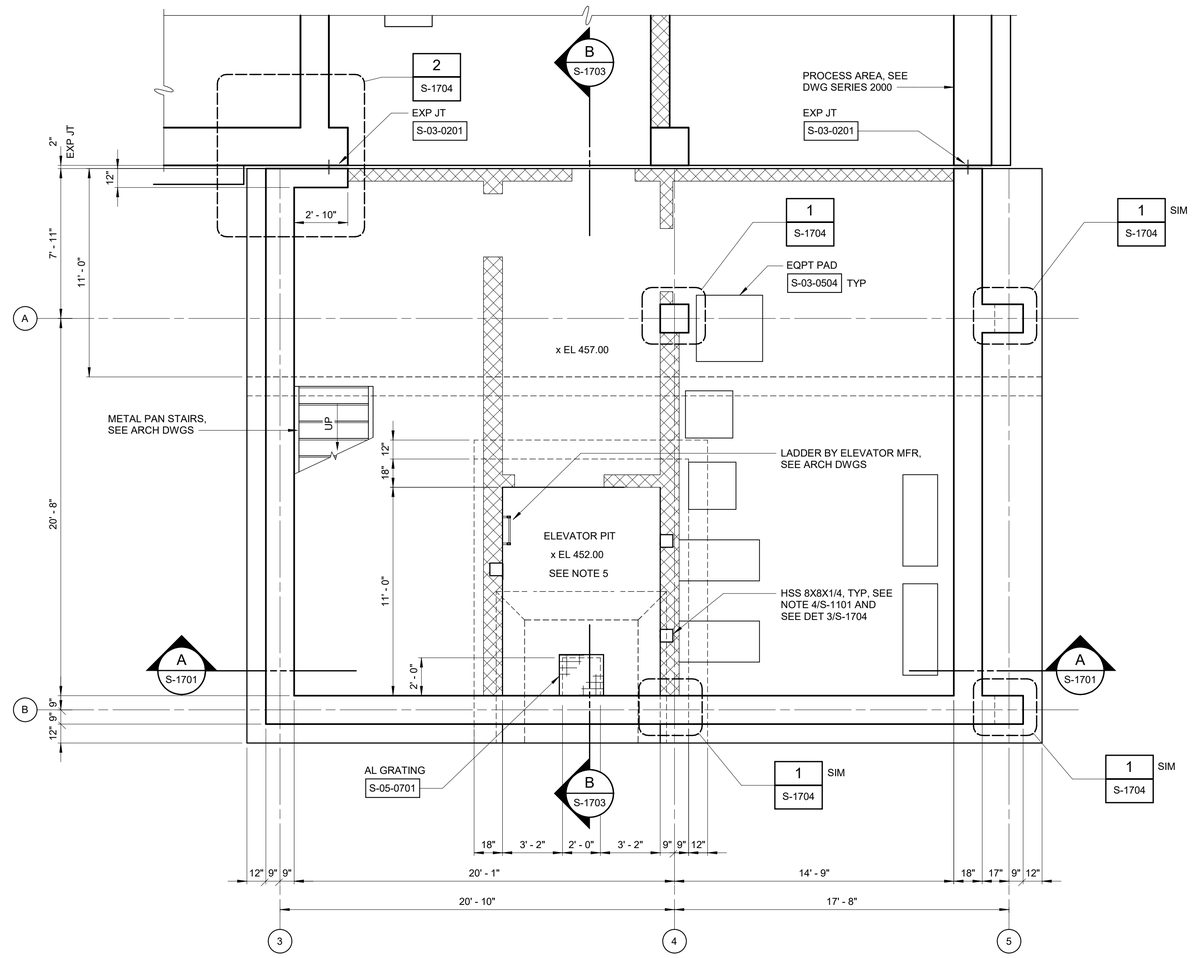

PLAN AT EL 457.00 - AREA 1

1/4" = 1'-0"

NOTES:

1. CONTRACTOR SHALL COORDINATE SIZE AND LOCATIONS OF SLAB AND WALL PENETRATIONS WITH OTHER DISCIPLINE DRAWINGS. PROVIDE TYPICAL REINFORCING AT OPENINGS PER STANDARD DETAIL S-03-0109.
2. CONTRACTOR SHALL COORDINATE SIZE AND LOCATIONS OF EQUIPMENT PADS WITH APPROVED EQUIPMENT PROVIDED.
3. SEE MASONRY NOTES ON DRAWING S-002.
4. HSS RAIL BRACKET SUPPORTS FOR ELEVATOR SHALL BE SET FLUSH WITH INSIDE FACE OF ELEVATOR HOISTWAY. PRIOR TO INSTALLATION, CONTRACTOR SHALL COORDINATE EXACT LOCATIONS OF HSS MEMBERS WITH ELEVATOR MANUFACTURER AND ELEVATOR SUBCONTRACTOR.
5. MINIMUM TOP OF SLAB ELEVATION IN ELEVATOR PIT SHALL BE 452.00. MAXIMUM DEPTH OF SUMP SHALL BE 2' - 0". CONTRACTOR TO COORDINATE THE SLAB ELEVATION AND SUMP DEPTH WITH ELEVATOR MANUFACTURER AND ELEVATOR SUBCONTRACTOR.
6. FOR WATER TREATMENT BUILDING - ADMIN AREA, CONCRETE WALLS, SLABS ON GRADE, AND FOUNDATION FOOTINGS SHALL BE CLASS A2 OR A3 CONCRETE. CONCRETE COLUMNS, BEAMS, AND ELEVATED SLABS SHALL BE CLASS A6 CONCRETE.
7. FABRICATION AND INSTALLATION OF METAL WORK DETAILED ON DRAWINGS S-011, S-012, AND S-013 SHALL BE FILED SUB-BID AND SHALL BE WORK OF MISCELLANEOUS AND ORNAMENTAL IRON SUBCONTRACTOR. SEE SPECIFICATION 05 00 00.

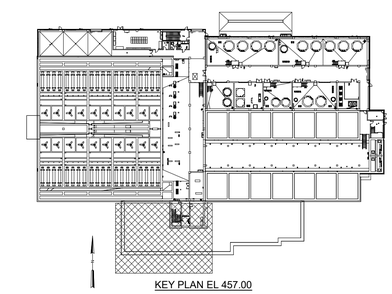

KEY PLAN EL 457.00

1/4" = 1'-0"

REV	ISSUED FOR	DATE	BY
1	ADDENDUM 5	APR 24	MWM
0	ISSUED FOR BIDS	FEB 24	MWM

PROJECT ENGINEER:	K. BARRETT
DESIGNED BY:	K. CARNEY
DRAWN BY:	S. LEPPLA
CHECKED BY:	S. MANZO
IF THIS BAR DOES NOT MEASURE 1" THEN DRAWING IS NOT TO FULL SCALE	0 1/2" 1"

COMMONWEALTH OF MASSACHUSETTS
LAURA D. BOBIER
STRUCTURAL
No. 52514
PROFESSIONAL ENGINEER
4/18/2024

Hazen

HAZEN AND SAWYER
100 GREAT MEADOW ROAD, SUITE 702
WETHERSFIELD, CT 06109

SPRINGFIELD WATER AND SEWER COMMISSION

WEST PARISH WATER TREATMENT PLANT

FILED SUB-BID

WATER TREATMENT BUILDING
STRUCTURAL
PLAN AT EL 457.00 - ADMINISTRATION AREA 1

DATE:	FEBRUARY 2024
HAZEN NO.:	90398-004
CONTRACT NO.:	24-51
DRAWING NUMBER:	S-1101

Autodesk Docs://90398-004_West Parish Filter WTF/90398-004-ADM-S.rvt
4/18/2024 3:24:24 PM

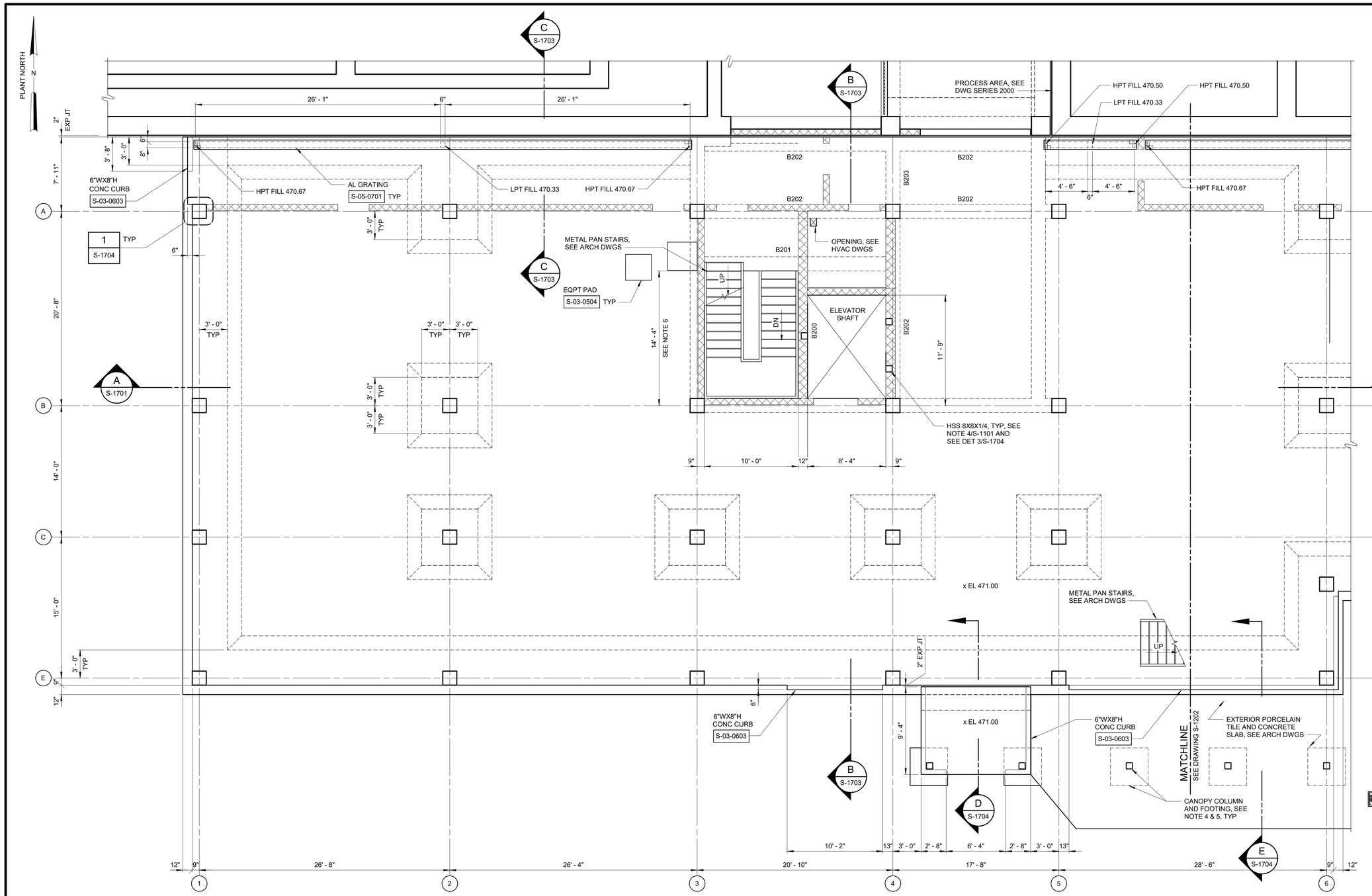

PLAN AT EL 471.00 - AREA 1

3/16" = 1'-0"

NOTES:

1. CONTRACTOR SHALL COORDINATE SIZE AND LOCATIONS OF SLAB AND WALL PENETRATIONS WITH OTHER DISCIPLINE DRAWINGS. PROVIDE TYPICAL REINFORCING AT OPENINGS PER STANDARD DETAIL S-03-0109.
2. CONTRACTOR SHALL COORDINATE SIZE AND LOCATIONS OF EQUIPMENT PADS WITH APPROVED EQUIPMENT PROVIDED.
3. SEE MASONRY NOTES ON DRAWING S-002.
4. CANOPY DESIGN DRAWINGS AND CALCULATIONS SHALL BE SIGNED AND SEALED BY A PROFESSIONAL ENGINEER REGISTERED IN THE COMMONWEALTH OF MASSACHUSETTS. SEE SPECIFICATION 10 73 16.
5. CANOPY FOOTINGS SHALL BE DESIGNED FOR CANOPY REACTION LOADS PROVIDED BY CANOPY MANUFACTURER. CANOPY FOOTING DESIGN DRAWINGS AND CALCULATIONS SHALL BE SIGNED AND SEALED BY A PROFESSIONAL ENGINEER REGISTERED IN THE COMMONWEALTH OF MASSACHUSETTS.
6. CONTRACTOR TO COORDINATE DIMENSION WITH METAL PAN STAIRS FABRICATOR AND MISCELLANEOUS AND ORNAMENTAL IRON SUBCONTRACTOR. (1)
7. FABRICATION AND INSTALLATION OF METAL WORK DETAILED ON DRAWINGS S-011, S-012, AND S-013 SHALL BE FILED SUB-BID AND SHALL BE WORK OF MISCELLANEOUS AND ORNAMENTAL IRON SUBCONTRACTOR. SEE SPECIFICATION 05 00 00.

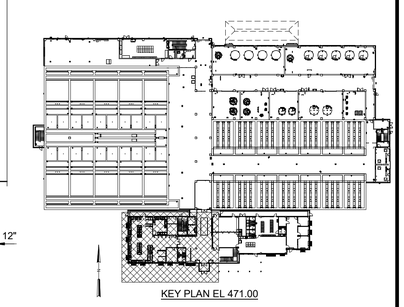

KEY PLAN EL 471.00

3/16" = 1'-0"

6 4 2 0 5'

REV	ISSUED FOR	DATE	BY
1	ADDENDUM 5	APR 24	MWM
0	ISSUED FOR BIDS	FEB 24	MWM

PROJECT ENGINEER:	K. BARRETT
DESIGNED BY:	K. CARNEY
DRAWN BY:	S. LEPPLA
CHECKED BY:	S. MANZO

IF THIS BAR DOES NOT MEASURE 1" THEN DRAWING IS NOT TO FULL SCALE 0 1/2" 1"

COMMONWEALTH OF MASSACHUSETTS LAURA D. BOBIER STRUCTURAL No. 52514 PROFESSIONAL ENGINEER 4/18/2024

Hazen

HAZEN AND SAWYER
100 GREAT MEADOW ROAD, SUITE 702
WETHERSFIELD, CT 06109

SPRINGFIELD WATER AND SEWER COMMISSION

WEST PARISH WATER TREATMENT PLANT

FILED SUB-BID

WATER TREATMENT BUILDING
STRUCTURAL
PLAN AT EL 471.00 - ADMINISTRATION AREA 1

DATE:	FEBRUARY 2024
HAZEN NO.:	90398-004
CONTRACT NO.:	24-51
DRAWING NUMBER:	S-1201

Autodesk Docs://90398-004_West Parish Filter WTF/90398-004-ADM-S.rvt
4/18/2024 3:26:54 PM

NOTES:

1. FOR LOADS AND LOAD DIAGRAMS ASSOCIATED WITH ROOF PLAN AT ELEVATION 499.00, SEE DRAWING S-1501.
2. PRECAST HOLLOW-CORE PLANK LAYOUT MAY BE ADJUSTED AS NEEDED TO COORDINATE WITH OPENINGS, CONNECTION DETAILS, AND PLANK MANUFACTURER'S REQUIREMENTS.
3. FOR INTERIOR PRECAST HOLLOW-CORE PLANK CONNECTIONS TO CONCRETE BEAMS ALONG CL A, B, AND C, SEE PRECAST PLANK AT INTERIOR NON-LOAD BEARING CONCRETE DETAIL S-03-1209.
4. ELEVATOR HOIST BEAM SHALL BE GALVANIZED AND SHALL BE SIZED BASED ON LOADS PROVIDED BY APPROVED ELEVATOR MANUFACTURER AND BUILDING CODE REQUIREMENTS. CONTRACTOR SHALL COORDINATE LOCATION OF ELEVATOR HOIST BEAM WITH ELEVATOR MANUFACTURER AND ELEVATOR SUBCONTRACTOR. ELEVATOR SUBCONTRACTOR SHALL SUBMIT HOIST BEAM DESIGN LOADS FOR ENGINEER TO VERIFY BEAM SIZE.

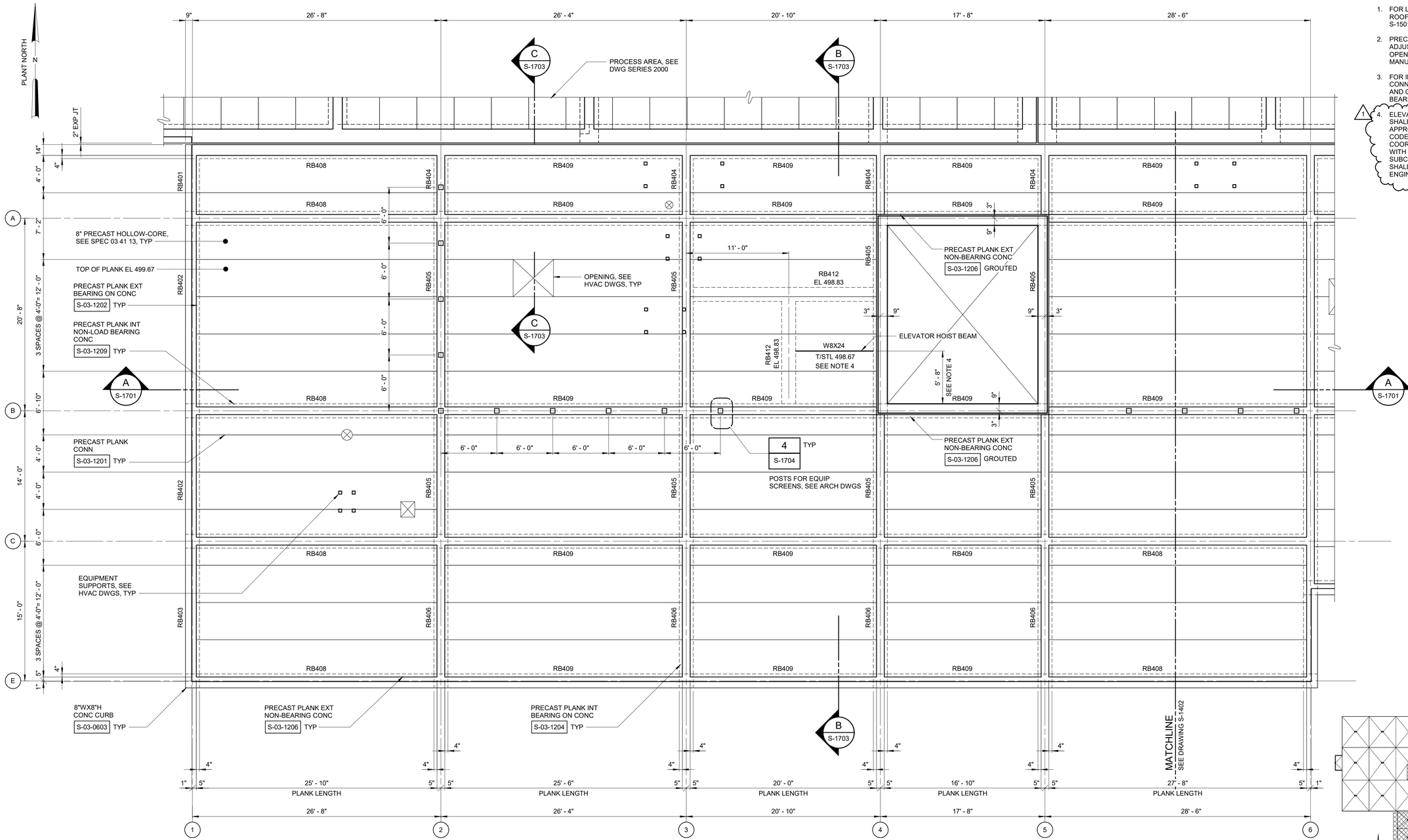

ROOF PLAN AT EL EL 499.00 - AREA 1

3/16" = 1'-0"

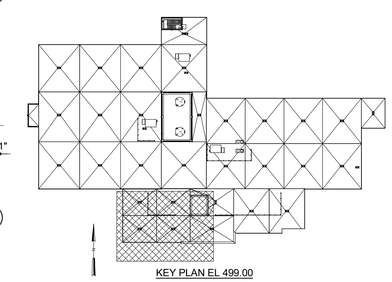

KEY PLAN EL 499.00

3/16" = 1'-0"

REV	ISSUED FOR	DATE	BY
1	ADDENDUM 5	APR 24	MWM
0	ISSUED FOR BIDS	FEB 24	MWM

PROJECT ENGINEER:	K. BARRETT
DESIGNED BY:	K. CARNEY
DRAWN BY:	S. LEPPLA
CHECKED BY:	S. MANZO

IF THIS BAR DOES NOT MEASURE 1" THEN DRAWING IS NOT TO FULL SCALE 0 1/2" 1"

COMMONWEALTH OF MASSACHUSETTS LAURA D. BOBIER STRUCTURAL No. 52514 PROFESSIONAL ENGINEER 4/18/2024

Hazen

HAZEN AND SAWYER
100 GREAT MEADOW ROAD, SUITE 702
WETHERSFIELD, CT 06109

SPRINGFIELD WATER AND SEWER COMMISSION

WEST PARISH WATER TREATMENT PLANT

WATER TREATMENT BUILDING
STRUCTURAL
ROOF PLAN AT EL 499.00 - ADMINISTRATION AREA 1

DATE:	FEBRUARY 2024
HAZEN NO.:	90398-004
CONTRACT NO.:	24-51
DRAWING NUMBER:	S-1401

Autodesk Docs://90398-004_West Parish Filter WTF/90398-004-ADM-S.rvt
4/18/2024 3:29:42 PM

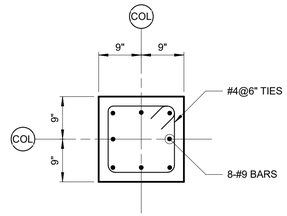

NOTES:

1. SEE STANDARD DETAIL S-03-0802 FOR COLUMN ELEVATION.
2. AT CL (A-4), (A,5), (B,4), AND (B,5), TIES AND LONGITUDINAL REINF SHALL BE CONTINUED DOWN TO EL 457.00 MAT SLAB. COLUMN DOWELS AT BASE SHALL BE FULLY DEVELOPED WITH 90-DEGREE HOOKS INTO MAT SLAB WITH TOC EL 457.00.
3. AT ALL OTHER LOCATIONS, BASE OF COLUMN SHALL BE EL 471.00. COLUMN DOWELS SHALL BE FULLY DEVELOPED WITH 90-DEGREE HOOKS INTO MAT SLAB WITH TOC EL 471.00, EXCEPT AT CL (A-3) AND (B-3), WHERE COLUMN DOWELS SHALL BE SPLICED WITH VERTICAL REINF IN CONCRETE WALL BELOW.

DETAIL 1 — 3/4" = 1'-0" — S-1101

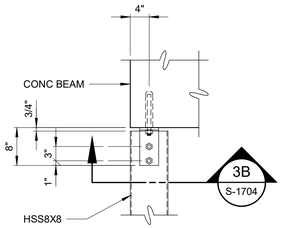

TOP

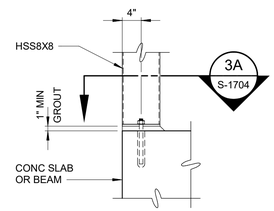

BOTTOM

NOTES:
1. ALL STEEL AND CONNECTING ELEMENTS SHALL BE GALVANIZED PER 05 05 13.
2. PRIOR TO FABRICATION, SUBMIT LOCATIONS OF HSS MEMBERS (COORDINATED WITH ELEVATOR MFR), ELEVATIONS OF RAIL SUPPORTS, AND LATERAL DESIGN LOADS TO RAIL SUPPORTS FOR ENGINEER TO VERIFY STRENGTH OF THE CONNECTION SHOWN.

DETAIL 3 — 3/4" = 1'-0" — S-1101

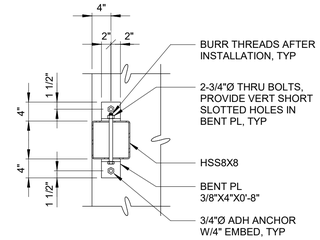

SECTION 3B — 3/4" = 1'-0" — S-1704

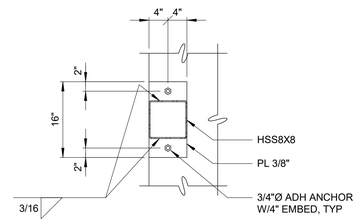

SECTION 3A — 3/4" = 1'-0" — S-1704

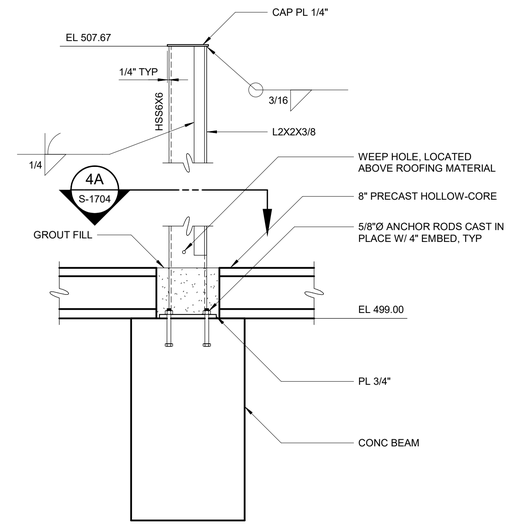

NOTES:
1. ALL STEEL AND CONNECTING ELEMENTS SHALL BE GALVANIZED PER 05 05 13.

DETAIL 4 — 1" = 1'-0" — S-1401

NOTES:

1. SEE ARCH DRAWINGS FOR CURTAINWALL RELIEF LOCATION. CURTAINWALL RELIEF SUPPORT SHALL BE L8X6X1/2, LLV GALVANIZED WITH 1/2" DIAMETER GALVANIZED ADHESIVE ANCHORS AT 32" ON CENTER WITH 6" MINIMUM EMBEDMENT. PROVIDE 3 1/2" STEEL EDGE DISTANCE IN VERTICAL LEG FOR ANCHOR HOLE. MIN 3 ANCHORS PER ANGLE.
2. SEE ARCH DRAWINGS FOR CURTAINWALL ANGLE LOCATION. CURTAINWALL ANGLE SHALL BE L6X6X3/8 GALVANIZED WITH 1/2" DIAMETER GALVANIZED ADHESIVE ANCHORS AT 32" ON CENTER WITH 6" MINIMUM EMBEDMENT. PROVIDE 2 1/2" STEEL EDGE DISTANCE IN LEG FOR ANCHOR HOLE. MIN 3 ANCHORS PER ANGLE.
3. SEE ARCH DRAWINGS FOR STONE RELIEF LOCATION AT CANOPY. STONE RELIEF SUPPORT SHALL BE L8X8X1/2 GALVANIZED WITH 1/2" DIAMETER GALVANIZED ADHESIVE ANCHORS AT 16" ON CENTER AND A 6" MINIMUM EMBEDMENT. PROVIDE 3.5" STEEL EDGE DISTANCE IN LEG FOR ANCHOR HOLE. MIN 3 ANCHORS PER ANGLE. FILED SUB-BID MASONRY SUBCONTRACTOR SHALL FURNISH AND INSTALL STONE RELIEF SUPPORT. SEE SPECIFICATION 04 00 00.
4. SEE ARCH DRAWINGS FOR CANOPY FRAMING CONNECTION TO CONCRETE BEAM SCHEMATIC. CONNECTION SHALL BE DESIGNED BY CANOPY MANUFACTURER. PRIOR TO FABRICATION OF CANOPY AND PLACEMENT OF CONCRETE FRAME, SUBMIT CANOPY REACTIONS AND CONNECTION DESIGN. ENGINEER SHALL VERIFY CONCRETE FRAME CAPACITY FOR THE CANOPY REACTION PROVIDED.
5. FABRICATION AND INSTALLATION OF METAL WORK DETAILED ON DRAWINGS S-011, S-012, AND S-013 SHALL BE FILED SUB-BID AND SHALL BE WORK OF MISCELLANEOUS AND ORNAMENTAL IRON SUBCONTRACTOR. SEE SPECIFICATION 05 00 00.

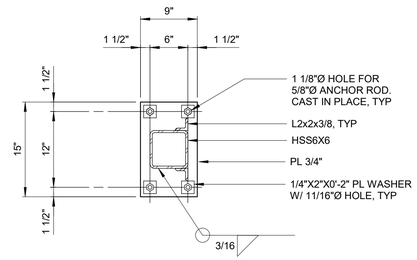

SECTION 4A — 1" = 1'-0" — S-1704

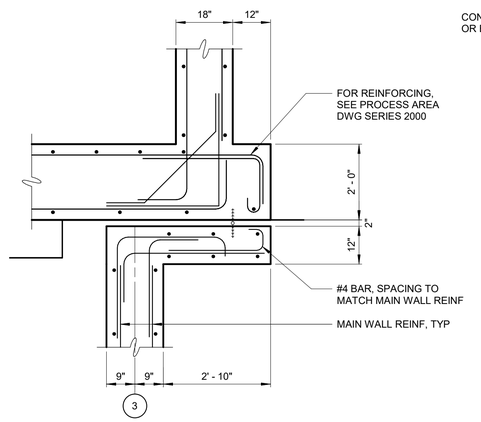

DETAIL 2 — 1/2" = 1'-0" — S-1101

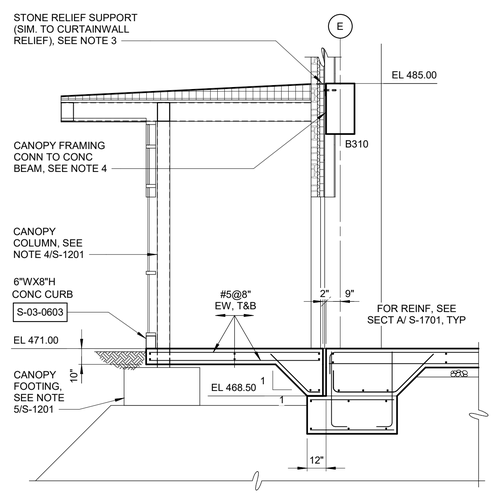

SECTION D — 1/4" = 1'-0" — S-1201

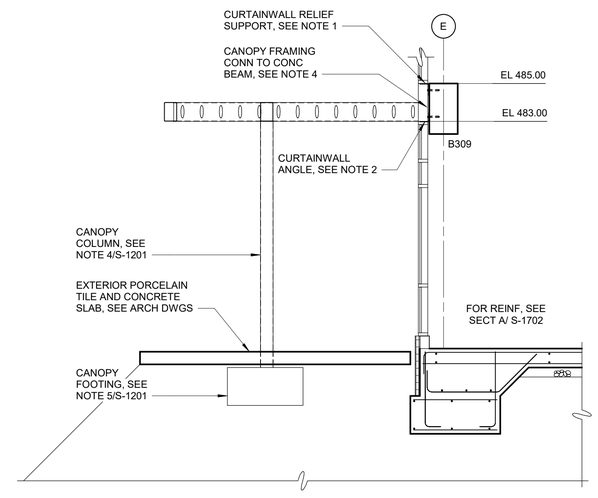

SECTION E — 1/4" = 1'-0" — S-1201

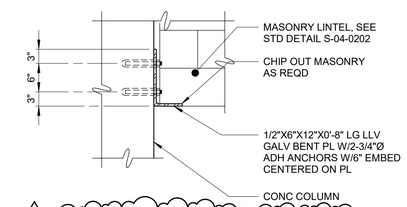

NOTE: FILED SUB-BID MASONRY SUBCONTRACTOR SHALL FURNISH AND INSTALL MASONRY AND STEEL SHOWN IN DETAIL 5. SEE SPECIFICATION 04 00 00.

DETAIL 5 — 3/4" = 1'-0" — S-1202

1" = 1'-0" 12" 6 0 1'
3/4" = 1'-0" 6" 0 1 2'
1/2" = 1'-0" 12" 0 1 3'
1/4" = 1'-0" 1 0 1 2 3 7'

REV	ISSUED FOR	DATE	BY
1	ADDENDUM 5	APR 24	MWM
0	ISSUED FOR BIDS	FEB 24	MWM

PROJECT ENGINEER: K. BARRETT
DESIGNED BY: K. CARNEY
DRAWN BY: S. LEPPLA
CHECKED BY: S. MANZO

IF THIS BAR DOES NOT MEASURE 1" THEN DRAWING IS NOT TO FULL SCALE — 0 1/2" 1"

COMMONWEALTH OF MASSACHUSETTS — LAURA D. BOBIER — STRUCTURAL — No. 52514 — PROFESSIONAL ENGINEER — 4/18/2024

Hazen
HAZEN AND SAWYER
100 GREAT MEADOW ROAD, SUITE 702
WETHERSFIELD, CT 06109

SPRINGFIELD WATER AND SEWER COMMISSION

WEST PARISH WATER TREATMENT PLANT

FILED SUB-BID

WATER TREATMENT BUILDING
STRUCTURAL
SECTIONS AND DETAILS - ADMINISTRATION AREA

DATE: FEBRUARY 2024
HAZEN NO.: 90398-004
CONTRACT NO.: 24-51
DRAWING NUMBER: S-1704

Autodesk Docs://90398-004_West Parish Filter WTF/90398-004-ADM-S.rvt
4/18/2024 2:25:23 PM

NOTES:

1. SEE ARCH DRAWINGS FOR SPLITFACE RELIEF LOCATION. SPLITFACE RELIEF SUPPORT SHALL BE 3/8"X7 1/2"X7 1/2" GALVANIZED STEEL BENT PLATE WITH 1/2" DIAMETER GALVANIZED ADHESIVE ANCHORS AT 24" ON CENTER, 5" MINIMUM EDGE DISTANCE, AND 6" MINIMUM EMBEDMENT. PROVIDE 1 1/2" STEEL EDGE DISTANCE IN LEG FOR ANCHOR HOLE. MINIMUM 3 ANCHORS PER BENT PLATE. FILED SUB-BID MASONRY SUBCONTRACTOR SHALL FURNISH AND INSTALL SPLITFACE RELIEF SUPPORT. SEE SPECIFICATION 04 00 00.
2. FABRICATION AND INSTALLATION OF METAL WORK DETAILED ON DRAWINGS S-011, S-012, AND S-013 SHALL BE FILED SUB-BID AND SHALL BE WORK OF MISCELLANEOUS AND ORNAMENTAL IRON SUBCONTRACTOR. SEE SPECIFICATION 05 00 00.

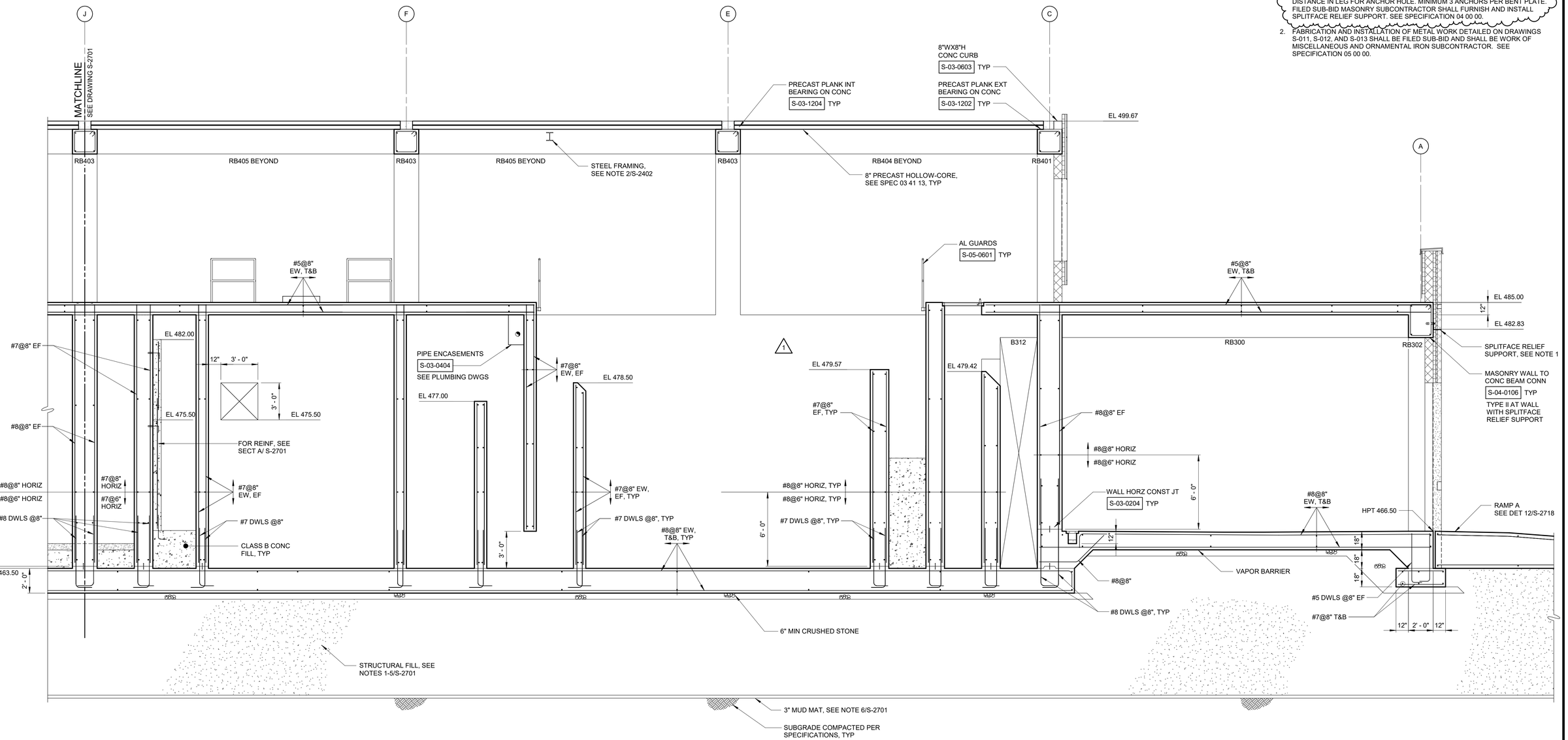

SECTION A / S-2201

1/4" = 1'-0"

1/4" = 1'-0"

REV	ISSUED FOR	DATE	BY
2	ADDENDUM 5	APR 24	MWM
1	ADDENDUM 4	APR 24	MWM
0	ISSUED FOR BIDS	FEB 24	MWM

PROJECT ENGINEER:	K. BARRETT
DESIGNED BY:	L. BOBIER
DRAWN BY:	S. LEPPLA
CHECKED BY:	S. MANZO

IF THIS BAR DOES NOT MEASURE 1" THEN DRAWING IS NOT TO FULL SCALE 0 1/2" 1"

COMMONWEALTH OF MASSACHUSETTS
LAURA D. BOBIER
STRUCTURAL
No. 52514
PROFESSIONAL ENGINEER
4/19/2024

Hazen

HAZEN AND SAWYER
100 GREAT MEADOW ROAD, SUITE 702
WETHERSFIELD, CT 06109

SPRINGFIELD WATER AND SEWER COMMISSION

WEST PARISH WATER TREATMENT PLANT

FILED SUB-BID

WATER TREATMENT BUILDING
STRUCTURAL
SECTIONS - PROCESS AREA SHEET 2

DATE:	FEBRUARY 2024
HAZEN NO.:	90398-004
CONTRACT NO.:	24-51
DRAWING NUMBER:	S-2702

Autodesk Docs://90398-004_West Parish Filter WTF/90398-004-TB-S.rvt
4/19/2024 2:31:03 PM

NOTES:

1. SEE ARCH DRAWINGS FOR STONE RELIEF LOCATION. STONE RELIEF SUPPORT SHALL BE L8x8x1/2 GALVANIZED WITH 5/8" DIAMETER GALVANIZED ADHESIVE ANCHORS AT 32" ON CENTER, 9 1/2" MINIMUM EDGE DISTANCE, AND 6" MINIMUM EMBEDMENT. PROVIDE 1 1/2" STEEL EDGE DISTANCE IN LEG FOR ANCHOR HOLE. MIN 3 ANCHORS PER ANGLE. FILED SUB-BID MASONRY SUBCONTRACTOR SHALL FURNISH AND INSTALL STONE RELIEF SUPPORT. SEE SPECIFICATION 04 00 00.
2. FABRICATION AND INSTALLATION OF METAL WORK DETAILED ON DRAWINGS S-011, S-012, AND S-013 SHALL BE FILED SUB-BID AND SHALL BE WORK OF MISCELLANEOUS AND ORNAMENTAL IRON SUBCONTRACTOR. SEE SPECIFICATION 05 00 00.

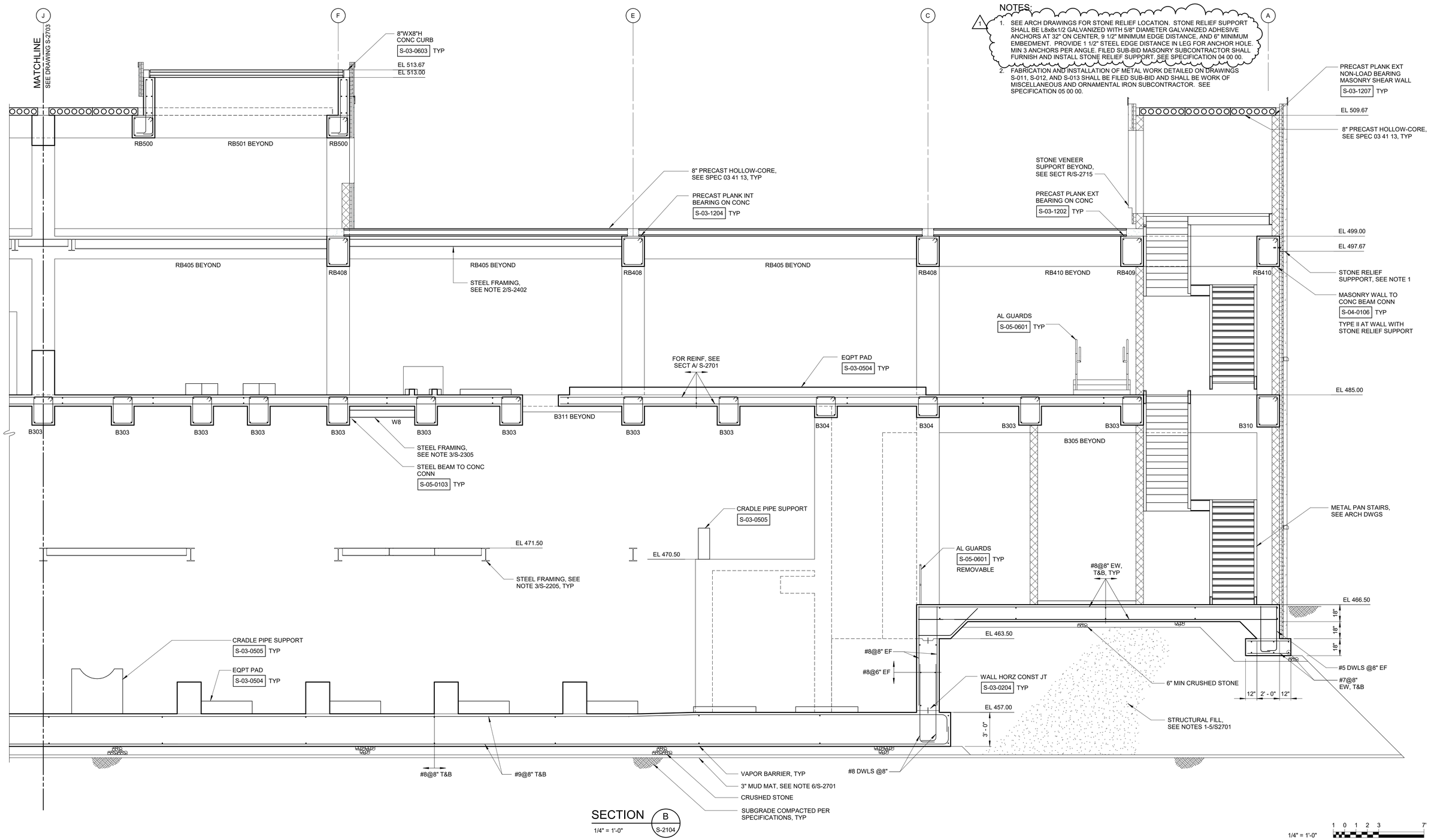

SECTION B S-2104

1/4" = 1'-0"

1/4" = 1'-0"

REV	ISSUED FOR	DATE	BY
1	ADDENDUM 5	APR 24	MWM
0	ISSUED FOR BIDS	FEB 24	MWM

PROJECT ENGINEER:	K. BARRETT
DESIGNED BY:	L. BOBIER
DRAWN BY:	S. LEPPLA
CHECKED BY:	S. MANZO

IF THIS BAR DOES NOT MEASURE 1" THEN DRAWING IS NOT TO FULL SCALE (0 1/2" 1")

COMMONWEALTH OF MASSACHUSETTS
LAURA D. BOBIER
STRUCTURAL
No. 52514
LICENSED PROFESSIONAL ENGINEER
4/19/2024

Hazen

HAZEN AND SAWYER
100 GREAT MEADOW ROAD, SUITE 702
WETHERSFIELD, CT 06109

SPRINGFIELD WATER AND SEWER COMMISSION

WEST PARISH WATER TREATMENT PLANT

FILED SUB-BID

WATER TREATMENT BUILDING
STRUCTURAL
SECTIONS - PROCESS AREA SHEET 4

DATE:	FEBRUARY 2024
HAZEN NO.:	90398-004
CONTRACT NO.:	24-51
DRAWING NUMBER:	S-2704

Autodesk Docs://90398-004_West Parish Filter WTF/90398-004-TB-S.rvt
4/19/2024 2:32:54 PM

NOTES:

1. SEE ARCH DRAWINGS FOR SPLITFACE RELIEF LOCATION. SPLITFACE RELIEF SUPPORT SHALL BE 3/8" X 7 1/2" X 7 1/2" GALVANIZED STEEL BENT PLATE WITH 1/2" DIAMETER GALVANIZED ADHESIVE ANCHORS AT 24" ON CENTER, 5" MINIMUM EDGE DISTANCE, AND 6" MINIMUM EMBEDMENT. PROVIDE 1 1/2" STEEL EDGE DISTANCE IN LEG FOR ANCHOR HOLE. MIN 3 ANCHORS PER BENT PLATE. FILED SUB-BID MASONRY SUBCONTRACTOR SHALL FURNISH AND INSTALL SPLITFACE RELIEF SUPPORT. SEE SPECIFICATION 04 00 00.
2. PROVIDE SST L4X4X1/4 AT ALL REMOVABLE FIRE RATED WALL PANEL HEAD, JAMBS, AND SILLS. SEE ARCH DRAWINGS FOR WALL PANEL LOCATIONS. ATTACH L6 TO GROUTED CMU WITH 1/2" DIAMETER SST ADHESIVE ANCHORS AT 32" ON CENTER, 3 1/2" MINIMUM EDGE DISTANCE, AND 3 1/2" MINIMUM EMBEDMENT. PROVIDE 1 1/2" STEEL EDGE DISTANCE IN LEG FOR ANCHOR HOLE.
3. AT CHEM FILL STATION PIPE PENETRATIONS, PROVIDE A CMU BOND BEAM WITH 2-#5 BARS SPANNING BETWEEN COLUMN LINES BOTH A COURSE ABOVE AND A COURSE BELOW PIPE PENETRATIONS. THE COURSE BETWEEN THE BOND BEAMS SHALL BE FULLY GROUTED. SEE MECH AND ARCH DRAWINGS FOR ADDITIONAL INFORMATION.
4. FABRICATION AND INSTALLATION OF METAL WORK DETAILED ON DRAWINGS S-011, S-012, AND S-013 SHALL BE FILED SUB-BID AND SHALL BE WORK OF MISCELLANEOUS AND ORNAMENTAL IRON SUBCONTRACTOR. SEE SPECIFICATION 05 00 00.

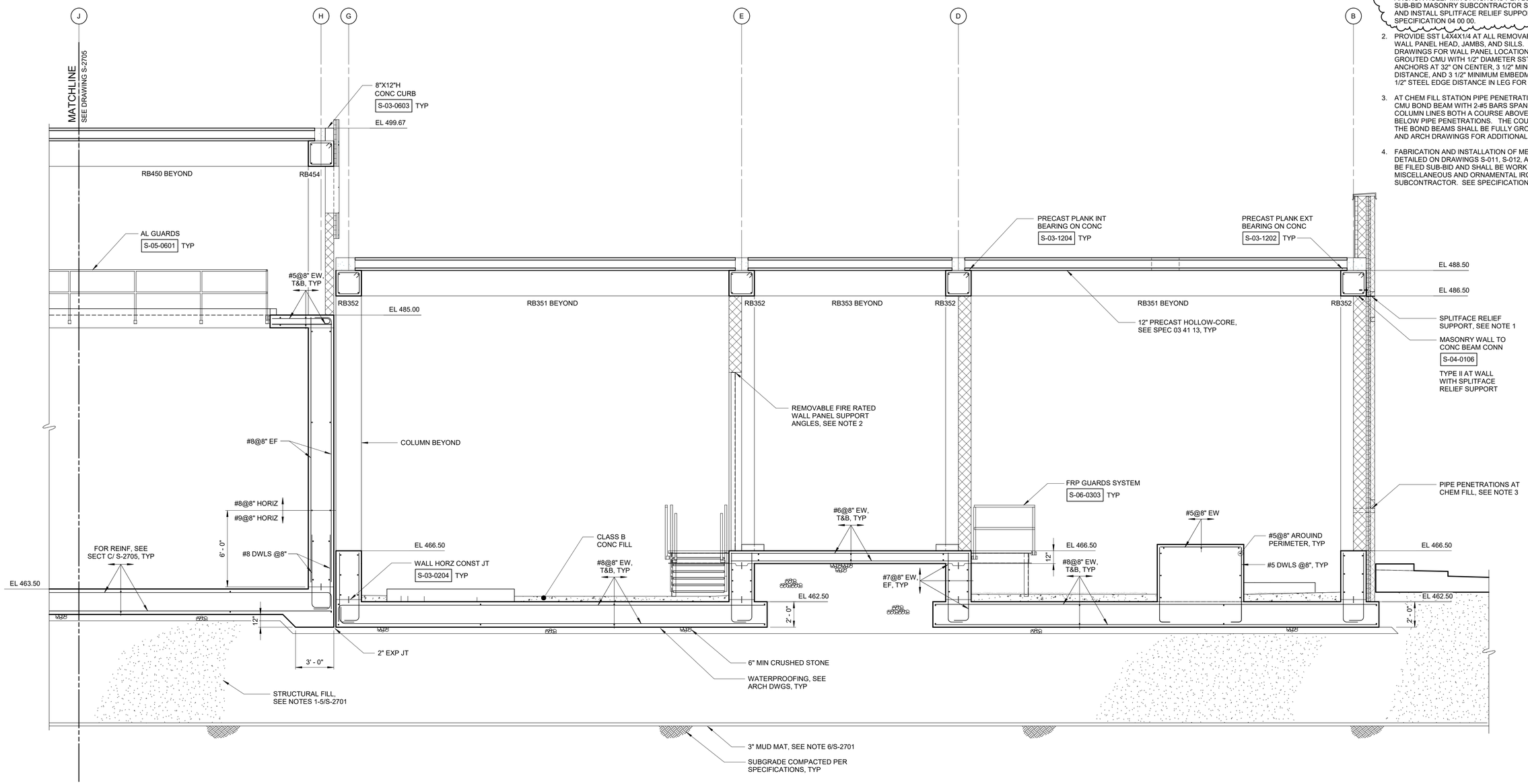

SECTION C / S-2207

1/4" = 1'-0"

1/4" = 1'-0" 1 0 1 2 3 7'

REV	ISSUED FOR	DATE	BY
1	ADDENDUM 5	APR 24	MWM
0	ISSUED FOR BIDS	FEB 24	MWM

PROJECT ENGINEER:	K. BARRETT
DESIGNED BY:	L. BOBIER
DRAWN BY:	S. LEPPLA
CHECKED BY:	S. MANZO

IF THIS BAR DOES NOT MEASURE 1" THEN DRAWING IS NOT TO FULL SCALE 0 1/2" 1"

COMMONWEALTH OF MASSACHUSETTS
LAURA D. BOBIER
STRUCTURAL
No. 52514
PROFESSIONAL ENGINEER
4/18/2024

Hazen

HAZEN AND SAWYER
100 GREAT MEADOW ROAD, SUITE 702
WETHERSFIELD, CT 06109

SPRINGFIELD WATER AND SEWER COMMISSION

WEST PARISH WATER TREATMENT PLANT

FILED SUB-BID

WATER TREATMENT BUILDING
STRUCTURAL
SECTIONS - PROCESS AREA SHEET 6

DATE:	FEBRUARY 2024
HAZEN NO.:	90398-004
CONTRACT NO.:	24-51
DRAWING NUMBER:	S-2706

Autodesk Docs://90398-004_West Parish Filter WTF/90398-004-TB-S.rvt
4/18/2024 2:33:37 PM

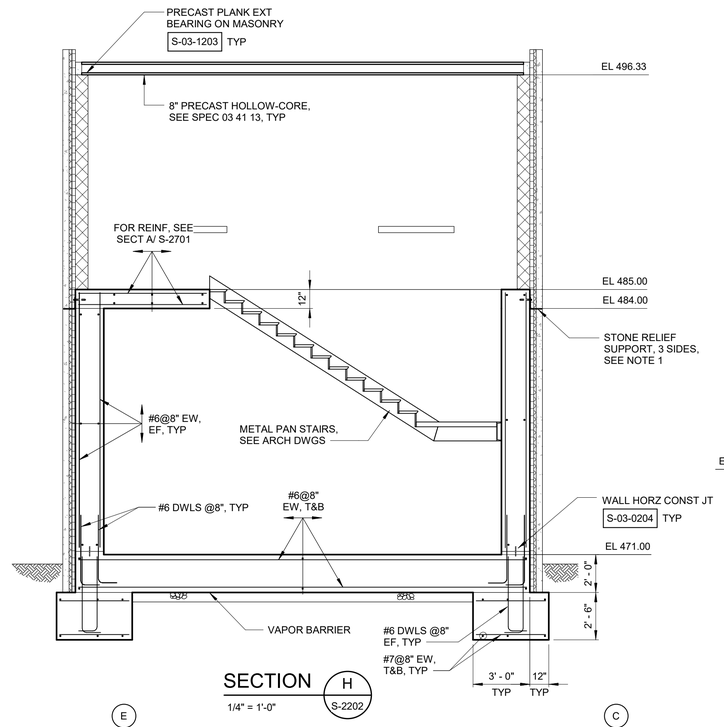

SECTION H S-2202
1/4" = 1'-0"

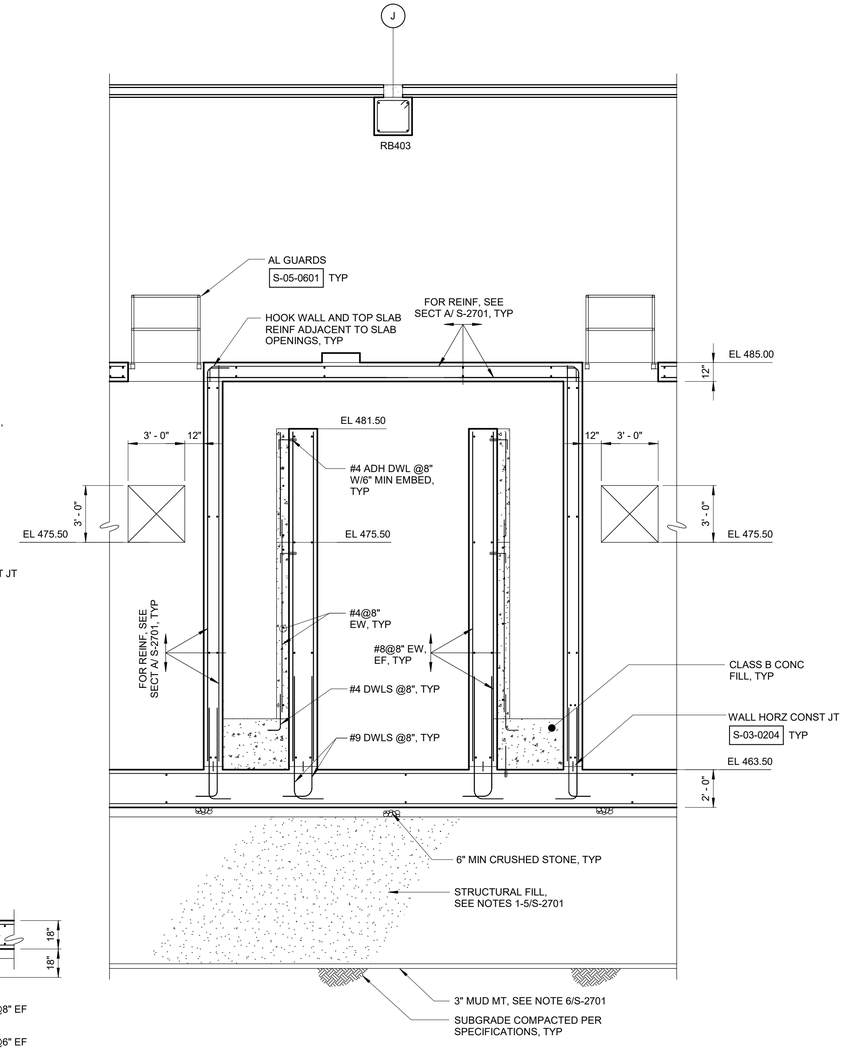

SECTION J S-2202
1/4" = 1'-0"

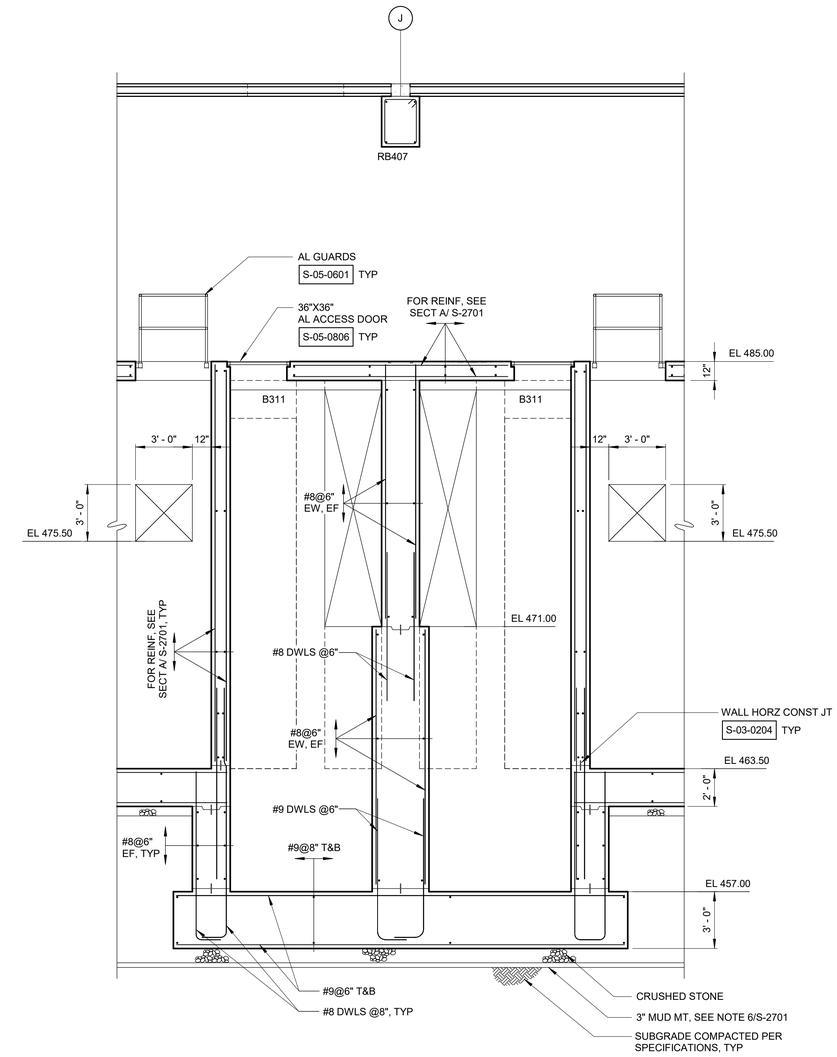

SECTION K S-2105
1/4" = 1'-0"

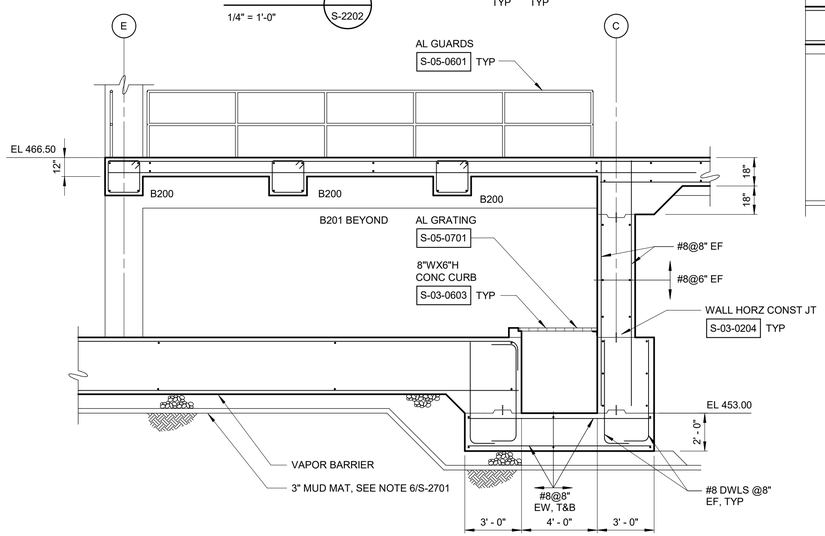

SECTION L S-2104
1/4" = 1'-0"

NOTES:

1. SEE ARCH DRAWINGS FOR STONE RELIEF LOCATION. STONE RELIEF SUPPORT SHALL BE GALVANIZED STEEL L8X8X1/2 WITH 5/8" DIAMETER GALVANIZED ADHESIVE ANCHORS AT 32" ON CENTER, 5 1/2" MINIMUM EDGE DISTANCE, AND 6" MINIMUM EMBEDMENT. PROVIDE 1 1/2" STEEL EDGE DISTANCE IN LEG FOR ANCHOR HOLE. MIN 3 ANCHORS PER ANGLE. FILED SUB-BID MASONRY SUBCONTRACTOR SHALL FURNISH AND INSTALL STONE RELIEF SUPPORT. SEE SPECIFICATION 04 00 00.
2. FABRICATION AND INSTALLATION OF METAL WORK DETAILED ON DRAWINGS S-011, S-012, AND S-013 SHALL BE FILED SUB-BID AND SHALL BE WORK OF MISCELLANEOUS AND ORNAMENTAL IRON SUBCONTRACTOR. SEE SPECIFICATION 05 00 00.

1/4" = 1'-0" 1 0 1 2 3 7'

REV	ISSUED FOR	DATE	BY
1	ADDENDUM 5	APR 24	MWM
0	ISSUED FOR BIDS	FEB 24	MWM

PROJECT ENGINEER:	K. BARRETT
DESIGNED BY:	L. BOBIER
DRAWN BY:	S. LEPPLA
CHECKED BY:	S. MANZO

IF THIS BAR DOES NOT MEASURE 1" THEN DRAWING IS NOT TO FULL SCALE 0 1/2" 1"

COMMONWEALTH OF MASSACHUSETTS LAURA D. BOBIER STRUCTURAL No. 52514 PROFESSIONAL ENGINEER 4/18/2024

Hazen

HAZEN AND SAWYER
100 GREAT MEADOW ROAD, SUITE 702
WETHERSFIELD, CT 06109

SPRINGFIELD WATER AND SEWER COMMISSION

WEST PARISH WATER TREATMENT PLANT

FILED SUB-BID

WATER TREATMENT BUILDING
STRUCTURAL
SECTIONS - PROCESS AREA SHEET 14

DATE:	FEBRUARY 2024
HAZEN NO.:	90398-004
CONTRACT NO.:	24-51
DRAWING NUMBER:	S-2714

Autodesk Docs://90398-004_West Parish Filter WTF/90398-004-TB-S.rvt
4/19/2024 2:34:20 PM

NOTES:

1. CONTRACTOR SHALL COORDINATE SIZE AND LOCATIONS OF SLAB AND WALL PENETRATIONS WITH OTHER DISCIPLINE DRAWINGS. PROVIDE TYPICAL REINFORCING AT OPENINGS PER STANDARD DETAIL S-03-0109.
2. CONTRACTOR SHALL COORDINATE SIZE AND LOCATIONS OF EQUIPMENT PADS WITH APPROVED EQUIPMENT PROVIDED.
3. SEE MASONRY NOTES ON DRAWING S-002.
4. HIGH LOAD FRP GRATING AND FRP BEAM SHALL BE DESIGNED FOR A FORKLIFT LOAD. FRP DESIGN SHALL BE SIGNED AND SEALED BY A PROFESSIONAL ENGINEER REGISTERED IN THE COMMONWEALTH OF MASSACHUSETTS. SEE SPECIFICATION 06 51 00 FOR ADDITIONAL INFORMATION.
5. RECESS FOR SCALE, COORDINATE WITH MANUFACTURER.
6. CONTRACTOR TO COORDINATE DIMENSION WITH METAL PAN STAIR FABRICATOR AND MISCELLANEOUS AND ORNAMENTAL IRON SUBCONTRACTOR.
7. FABRICATION AND INSTALLATION OF METAL WORK DETAILED ON DRAWINGS S-011, S-012, AND S-013 SHALL BE FILED SUB-BID AND SHALL BE WORK OF MISCELLANEOUS AND ORNAMENTAL IRON SUBCONTRACTOR. SEE SPECIFICATION 05 00 00.

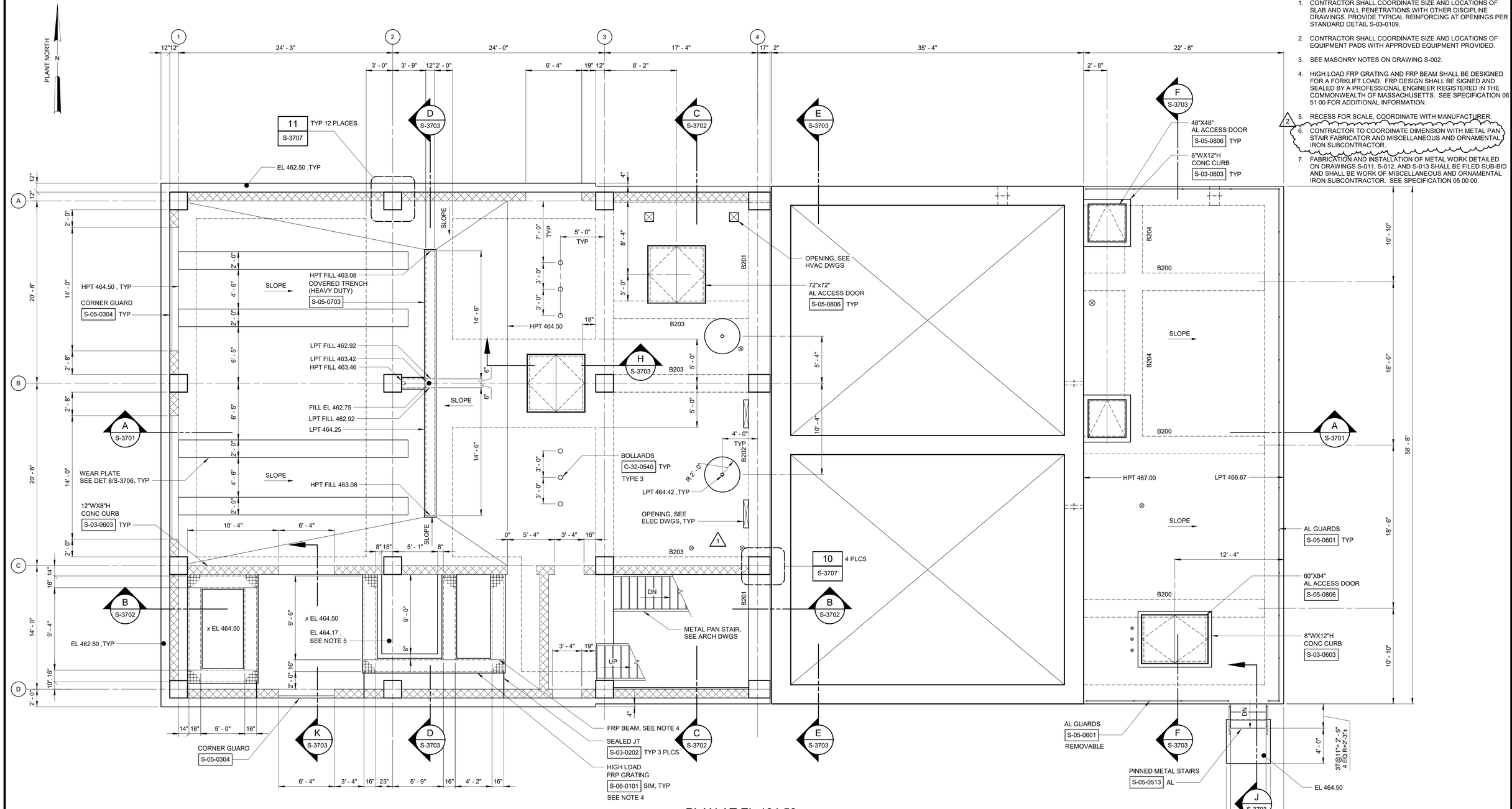

PLAN AT EL 464.50
3/16" = 1'-0"

REV	ISSUED FOR	DATE	BY
2	ADDENDUM 5	APR 24	MWM
1	ADDENDUM 4	APR 24	MWM
0	ISSUED FOR BIDS	FEB 24	MWM

PROJECT ENGINEER:	K. BARRETT
DESIGNED BY:	K. CARNEY
DRAWN BY:	S. LEPPLA
CHECKED BY:	C. PHILLIPS

IF THIS BAR DOES NOT MEASURE 1" THEN DRAWING IS NOT TO FULL SCALE 0 1/2" 1"

COMMONWEALTH OF MASSACHUSETTS LAURA D. BOBIER STRUCTURAL No. 52514 PROFESSIONAL ENGINEER 4/18/2024

Hazen

HAZEN AND SAWYER
100 GREAT MEADOW ROAD, SUITE 702
WETHERSFIELD, CT 06109

SPRINGFIELD WATER AND SEWER COMMISSION

WEST PARISH WATER TREATMENT PLANT

FILED SUB-BID

DEWATERING BUILDING
STRUCTURAL
PLAN AT EL 464.50

DATE:	FEBRUARY 2024
HAZEN NO.:	90398-004
CONTRACT NO.:	24-51
DRAWING NUMBER:	S-3201

Autodesk Docs://90398-004_West Parish Filter WTF/90398-004-DWB-S.rvt
4/18/2024 3:39:19 PM

SCHEDULE A

BASE ELBOW (TEE) (DIM IN INCHES)

PIPE SIZE	A	B	C	D DIA
3	1 1/2	5	4 7/8	1/2
4	2	6	5 1/2	5/8
5-6	2 1/2	7	VARIES	5/8
8-10	4	9	VARIES	5/8
12-16	6	11	VARIES	3/4
18-24	8	13 1/2	VARIES	3/4
30	10	16	23	7/8
36	12	19	26	7/8

SCHEDULE B

ADJUSTABLE SADDLE (DIM IN INCHES)

PIPE SIZE	A	B	C	D DIA
3	2 1/2	7	1 1/2	5/8
4-12	3	7 1/2	2 1/2	5/8
14-16	4	9	3	5/8
18-20	6	11	3 1/2	3/4
24-48	6	11	4	3/4

SCHEDULE C

SUPPORT RODS AND BRACKET SPACING (FOR STANDARD WEIGHT PIPE)

PIPE SIZE (INCHES)	BACK PLATE (INCHES)	MINIMUM ROD Ø (INCHES)		MAX SPAN IN FEET (SEE NOTE 8)			
		PROCESS PIPING	STEEL AIR PIPING	COPPER	PLASTIC	STEEL	DIP (SEE NOTE 7)
UP TO 1	SEE NOTE 4	3/8	3/8	5	5	6	-
1 1/4-2	"	3/8	3/8	8	5	10	-
2 1/2-3 1/2	"	3/8	3/8	8	5	12	6
4-5	"	1/2	3/8	-	5	14	8
6	"	5/8	3/8	-	5	15	9
8-12	"	3/4	1/2	-	5	15	9
14-16	"	7/8	1/2	-	5	15	9
18	"	1	1/2	-	5	18	10
20-24	"	1 1/4	5/8	-	5	18	10

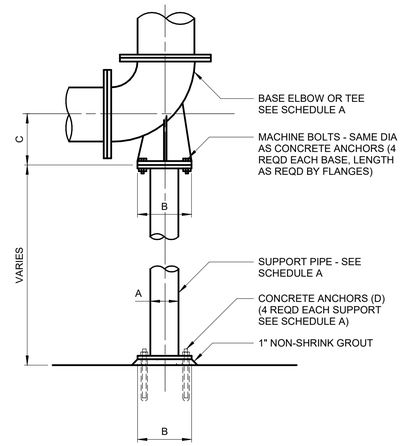

BASE ELBOW (TEE)

M-40-0300

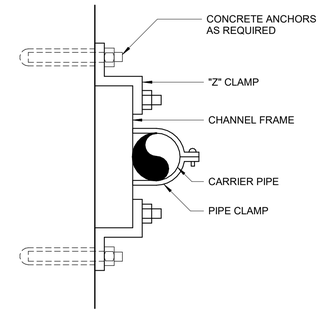

PIPE WALL SUPPORT AND SUPPORT RACK SHALL BE ASSEMBLED W/ CHANNEL FRAMES AND ACCESSORIES AS MANUFACTURED BY UNISTRUT CORP OR EQUAL

PIPE WALL SUPPORT

M-40-0301

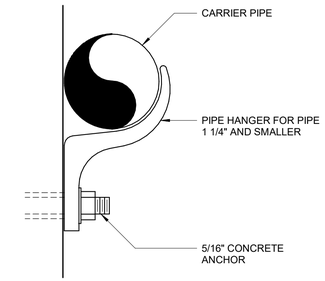

WALL HANGER PIPE SUPPORT

M-40-0302

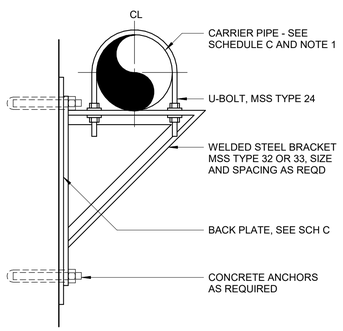

PIPE SUPPORT BRACKET

M-40-0303

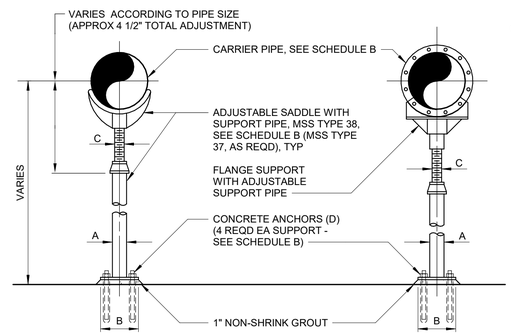

ADJUSTABLE SADDLE

FLANGE SUPPORT

M-40-0304

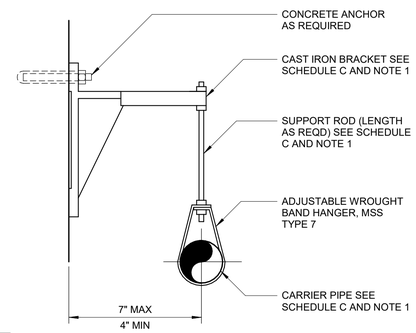

PIPE SUPPORT BRACKET

M-40-0305

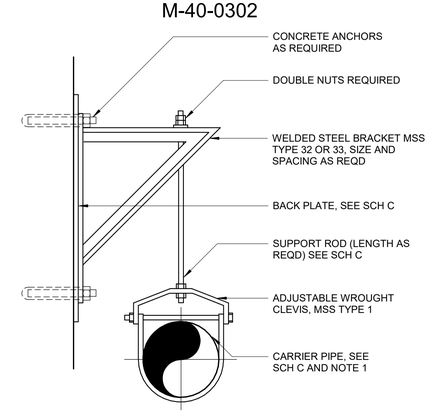

PIPE SUPPORT BRACKET

M-40-0306

SCHEDULE D

TRAPEZE SUPPORT (DIM IN INCHES)

PIPE SIZE	STEEL TUBE SUPPORT BEAM VERT x HOR	MINIMUM ROD Ø (INCHES)		WASHER PLATE	BASE PLATE			WELD	CONCRETE ANCHOR DIA	MAX SUPPORT SPACING IN FEET (SEE NOTE 8)	
		PROCESS PIPING	STEEL AIR PIPING		A	B	C	D		PROCESS PIPING	STEEL AIR PIPING
12-14	4x4x3/8	1/2	1/2	4x4x1/4	1	10	3/8	3/16	1/2	10	15
16-24	4x4x3/8	3/4	5/8	4x4x3/8	1	10	1/2	3/16	5/8	10	15
30-36	6x4x3/8	1	3/4	4x4x1/2	2	12	1/2	1/4	3/4	10	20
42	6x4x3/8	1 1/4	3/4	5x5x1/2	2	12	3/4	1/4	7/8	10	25
48	8x4x3/8	1 1/2	1	5x5x3/4	2	12	1	1/4	1	10	30

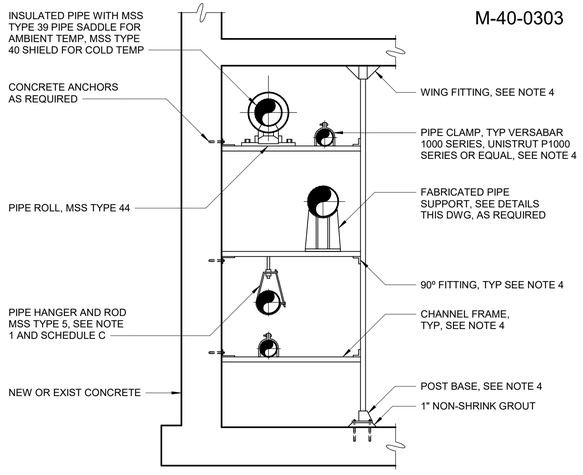

PIPE SUPPORT RACK

M-40-0307

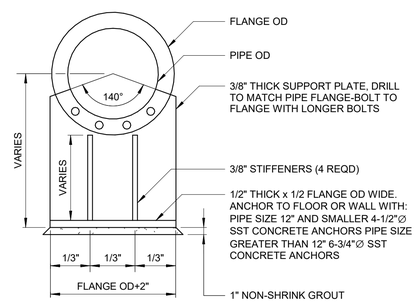

FABRICATED PIPE SUPPORT (AT FLANGE)

M-40-0308

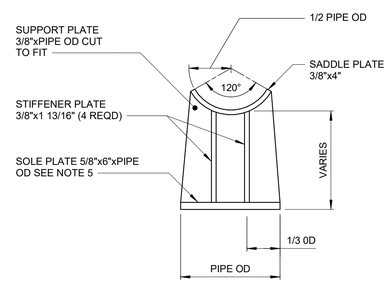

FABRICATED PIPE SUPPORT (AT PIPE)

M-40-0309

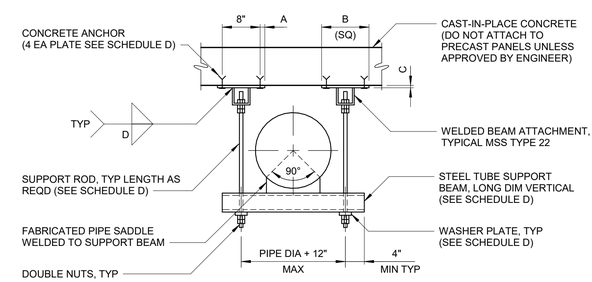

TRAPEZE SUPPORT

M-40-0310

NOTES:

1. CONTRACTOR AND MISCELLANEOUS & ORNAMENTAL IRON SUBCONTRACTOR SHALL DESIGN THE SUPPORT SYSTEMS BASED ON ACTUAL WEIGHTS AND CONDITIONS AS SPECIFIED OR AS SHOWN ON THE CONTRACT DRAWINGS. PIPE HANGERS, SUPPORTS AND BRACKETS SHOWN HERE IN VARIOUS COMBINATIONS REPRESENT MINIMUM REQUIREMENTS FOR ACCEPTABLE SUPPORTS AS TO TYPES, MATERIALS, THICKNESSES, ORIENTATION, AND QUALITY. CONTRACTOR SHALL SUBMIT DESIGN CALCULATIONS AND DETAILS FOR PIPE SUPPORTS SEALED BY A PROFESSIONAL ENGINEER LICENSED BY THE STATE OR COMMONWEALTH WHERE THE PROJECT IS LOCATED WITH ALL PIPE HANGER AND SUPPORT SUBMISSIONS FOR REVIEW BY THE ENGINEER. WHEN SUBMITTING PROPOSED PIPE SUPPORTS AND SUPPORT LOCATIONS, THE CONTRACTOR SHALL USE APPROVED PIPING LAYOUT SUBMITTAL DRAWINGS TO SHOW PROPOSED PIPE SUPPORT TYPE AND LOCATION WITH ACCURATE DIMENSIONS TO DEMONSTRATE THAT SUPPORTS DO NOT EXCEED THE MAXIMUM SPACING REQUIREMENTS OF SECTION 40 05 07. THIS ENSURES THAT SUPPORTS HAVE BEEN COORDINATED WITH ACTUAL PIPE INSTALLATION DRAWINGS. AND THAT SPACING DOES NOT EXCEED MAXIMUM ALLOWABLE SPACING. THE PIPE SUPPORTS SHOWN AND REFERENCED UNDER SCHEDULES A, B & C ARE DESIGNED AND DETAILED FOR GRAVITY LOADING ONLY. RESULTING LATERAL LOADS FROM CONSTRUCTION CONDITIONS, DESIGN SEISMIC EVENT OR OTHER RELATED CONDITIONS SHALL BE APPLIED TO THE PIPE AND OTHER NON-STRUCTURAL COMPONENTS IN ACCORDANCE WITH THE GOVERNING BUILDING CODE. SUPPLEMENTAL LATERAL STIFFNESS, RESISTANCE AND MEMBERS (WHEN NECESSARY) SHALL BE PROVIDED ALONG PIPE OR AT GRAVITY SUPPORTS AND CONNECTIONS WHEN REQUIRED BY CALCULATIONS.
2. TYPICALLY, REINFORCED CONCRETE SUPPORTS SHALL BE USED WHEN PIPE CENTERLINE IS LESS THAN 3-FEET ABOVE CONCRETE FLOOR OR FINISHED GRADE, AND AT A MINIMUM, SHALL CONFORM TO STANDARD DETAIL S-03-0505.
3. MSS REFERS TO THE MANUFACTURERS STANDARDIZATION SOCIETY OF THE VALVE AND FITTINGS INDUSTRY, STANDARD PRACTICE SP-58.
4. PIPE WALL SUPPORT AND PIPE SUPPORT RACK SHALL BE ASSEMBLED WITH CHANNEL FRAMES AND ACCESSORIES AS MANUFACTURED BY UNISTRUT CORP, OR VERSABAR CORP, OR EQUAL.
5. FABRICATED PIPE SUPPORT MAY BE USED AS SHOWN IN PIPE SUPPORT RACK DETAIL, OR TO SUPPORT PIPE FROM THE FLOOR.
6. BACK PLATES SHALL BE DESIGNED BY THE CONTRACTOR ACCORDING TO WALL TYPES AND THE WEIGHTS INVOLVED. BACK PLATE TO BE SUPPLIED BY BRACKET MANUFACTURER.
7. ALL INSULATED PIPES SHALL USE A SHIELD (MSS TYPE 40) WITH THE APPLICABLE PIPE SUPPORT.
8. MINIMUM OF ONE HANGER PER PIPE SECTION, CLOSE TO JOINT, ON THE BARREL. ALSO AT CHANGE IN DIRECTION AND BRANCH CONNECTIONS.
9. RODS AND SPACING ARE BASED ON STANDARD WEIGHT MATERIALS ACCORDING TO MSS SP-58ze. AND ARE FOR REFERENCE ONLY. THE CONTRACTOR SHALL SPACE HANGERS BASED ON ACTUAL CONDITIONS.
10. REFER TO THE APPROPRIATE AND RELATED SPECIFICATION SECTIONS AND DRAWINGS OF THE CONTRACT DOCUMENTS REGARDING SUPPLEMENTAL DESIGN REQUIREMENTS RELATING TO PERFORMANCE SUBMISSIONS BY CONTRACTOR. ALL NON-STRUCTURAL COMPONENTS, INCLUDING PIPING, HVAC DUCT, PLUMBING AND ELECTRICAL CONDUIT SUPPORT SYSTEMS SHALL BE ADEQUATELY DESIGNED AND INSTALLED UTILIZING SUFFICIENT CONNECTIONS AND MEMBERS TO ACCOMMODATE AND RESIST THE DESIGN LATERAL FORCES ASSOCIATED WITH A SPECIFIC COMPONENT'S DYNAMIC INERTIA DURING THE DESIGN SEISMIC EVENT. REFER TO THE GENERAL STRUCTURAL NOTES FOR STRUCTURAL DESIGN INFORMATION FOR SPECIFIC SEISMIC DESIGN CRITERIA.
11. UNLESS SPECIFICALLY NOTED, PIPE SUPPORTS SHOWN ON PLANS AND SECTIONS ARE FOR ILLUSTRATIVE PURPOSES ONLY, CONTRACTOR SHALL DETERMINE PIPE SUPPORT REQUIREMENTS.
12. FABRICATED PIPE SUPPORTS SHALL BE BY THE MISCELLANEOUS & ORNAMENTAL IRON SUBCONTRACTOR. SEE SECTION 40 05 07 - PIPE SUPPORTS. (1)

REV	ISSUED FOR	DATE	BY
1	ADDENDUM NO. 5	APR 24	MWM
0	ISSUED FOR BIDS	FEB 24	MWM

PROJECT ENGINEER: K. BARRETT
DESIGNED BY: D. KVOPKA
DRAWN BY: D. KVOPKA
CHECKED BY: M. MORIN

IF THIS BAR DOES NOT MEASURE 1" THEN DRAWING IS NOT TO FULL SCALE (0 1/2" 1")

COMMONWEALTH OF MASSACHUSETTS MARC W. MORIN CIVIL No. 53793 REGISTERED PROFESSIONAL ENGINEER
04/23/2024

Hazen
HAZEN AND SAWYER
100 GREAT MEADOW ROAD, SUITE 702
WETHERSFIELD, CT 06109

SPRINGFIELD WATER AND SEWER COMMISSION

WEST PARISH WATER TREATMENT PLANT

FILED SUB-BID (1)

MECHANICAL
STANDARD DETAILS - SHEET 3

DATE: FEBRUARY 2024
HAZEN NO.: 90398-004
CONTRACT NO.: 24-51
DRAWING NUMBER: M-003

Autodesk Docs://90398-004_West Parish Filter WTF/90398-004-M_Gen1.rvt
4/16/2024 12:18:46 PM

PIPE SIZE	TRUNNION Ø	BASEPLATE	ANCHOR SPACING
10"	8"	12"x12"x1/2"	9"
20"	14"	18"x18"x1"	14"
24"	16"	20"x20"x1"	16"

NOTE: MATERIAL AND WALL THICKNESS OF TRUNNION SHALL BE SAME AS THE PIPE IT IS SUPPORTING

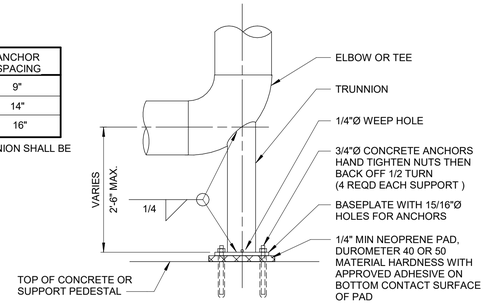

SLIDING SUPPORT

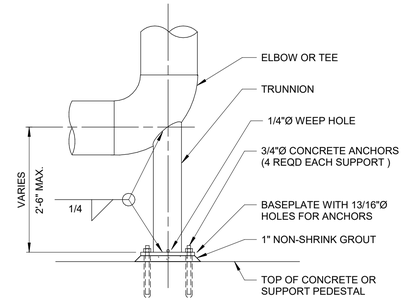

FIXED SUPPORT

DAFR ELBOW (TEE) TRUNNION SUPPORT

M-40-0300R

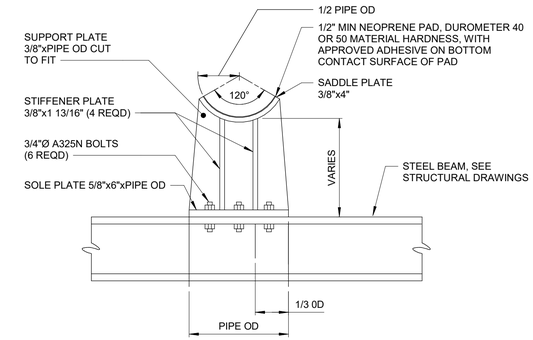

DAFR FABRICATED PIPE SUPPORT (AT PIPE) ON STEEL BEAM

M-40-0309R

1 NOTES:
1. FABRICATED PIPE SUPPORTS SHALL BE BY THE MISCELLANEOUS & ORNAMENTAL IRON SUBCONTRACTOR. SEE SECTION 40 05 07 - PIPE SUPPORTS.

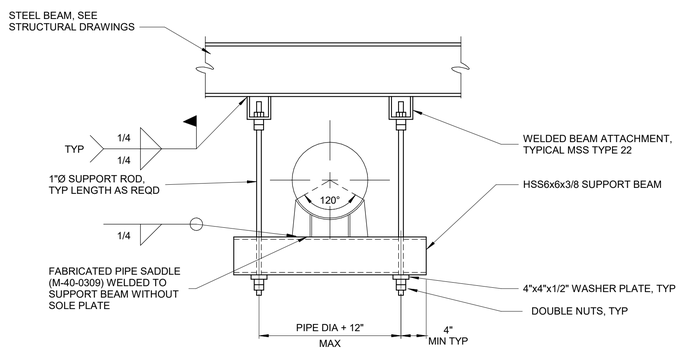

DAFR TRAPEZE SUPPORT WITHOUT BRACE

M-40-0311

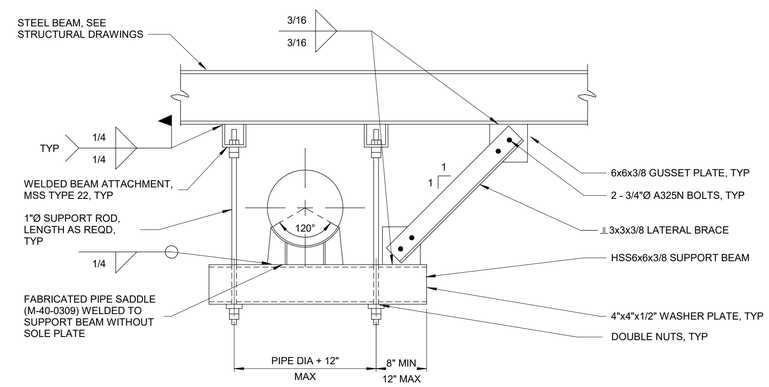

DAFR TRAPEZE SUPPORT WITH LATERAL BRACE

M-40-0312

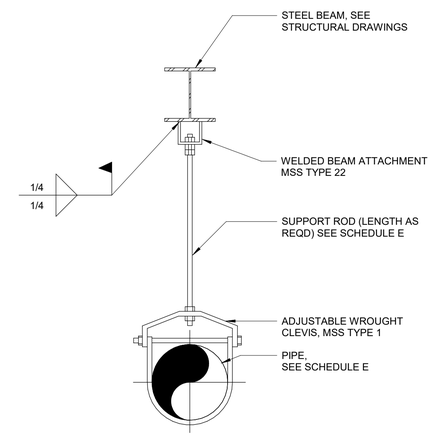

DAFR CLEVIS HANGER

M-40-0314

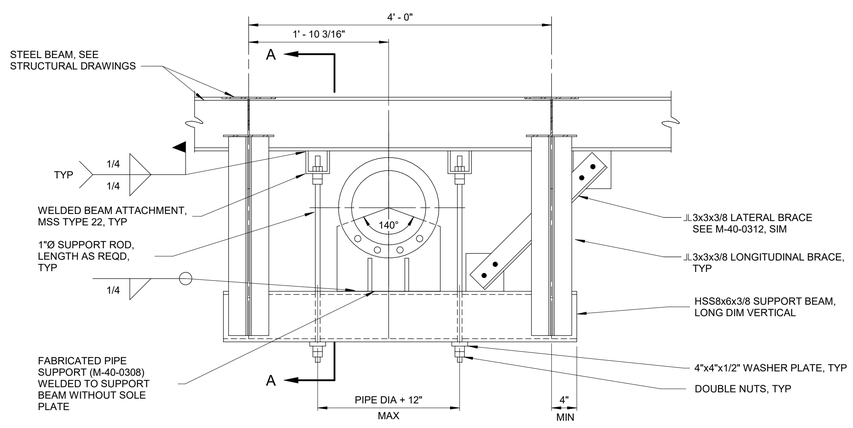

DAFR TRAPEZE SUPPORT WITH LONGITUDINAL BRACE

M-40-0313

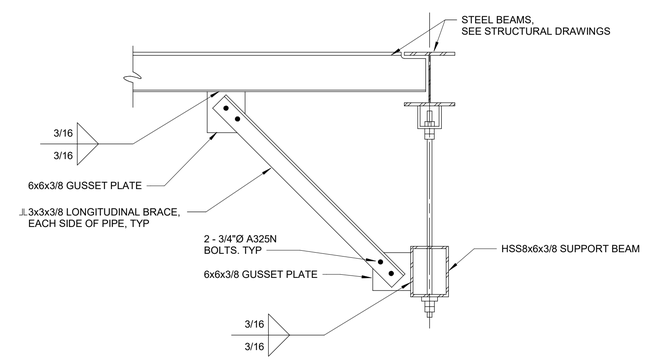

SECTION A-A

SCHEDULE E	
CLEVIS HANGER (DIM IN INCHES)	
PIPE SIZE	MINIMUM ROD Ø (INCHES) SEE NOTE
12	7/8
16-20	1

NOTE: ROD DIAMETER SHALL BE THE LARGER OF THE MINIMUM ROD DIAMETER LISTED AND THE SIZE REQUIRED BY THE CLEVIS HANGER MANUFACTURER.

REV	ISSUED FOR	DATE	BY
1	ADDENDUM NO. 5	APR 24	MWM
0	ISSUED FOR BIDS	FEB 24	MWM

PROJECT ENGINEER:	K. BARRETT
DESIGNED BY:	J. CANTOR
DRAWN BY:	D. KVOPKA
CHECKED BY:	M. MORIN
IF THIS BAR DOES NOT MEASURE 1" THEN DRAWING IS NOT TO FULL SCALE	0 1/2" 1"

COMMONWEALTH OF MASSACHUSETTS MARC W. MORIN CIVIL No. 53793 REGISTERED PROFESSIONAL ENGINEER
04/23/2024

Hazen

HAZEN AND SAWYER
100 GREAT MEADOW ROAD, SUITE 702
WETHERSFIELD, CT 06109

SPRINGFIELD WATER AND SEWER COMMISSION

WEST PARISH WATER TREATMENT PLANT

FILED SUB-BID 1

MECHANICAL
STANDARD DETAILS - SHEET 4

DATE:	FEBRUARY 2024
HAZEN NO.:	90398-004
CONTRACT NO.:	24-51
DRAWING NUMBER:	M-004

Autodesk Docs://90398-004_West Parish Filter WTF/90398-004-M_Gen1.rvt
4/16/2024 12:18:46 PM

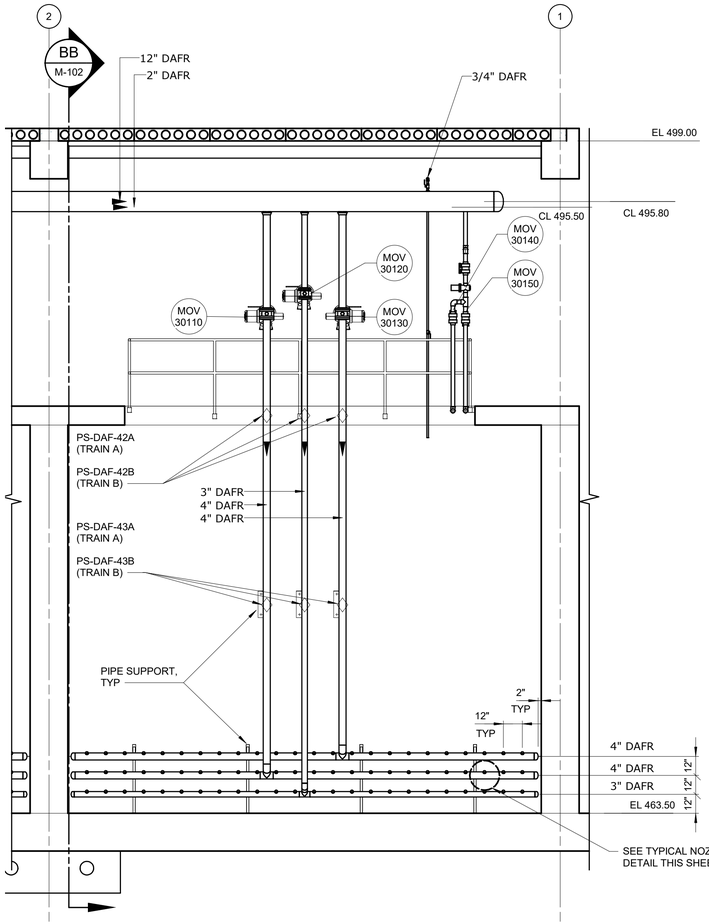

DAF DISPERSION HEADER DETAIL

DETAIL 6
NTS
M-2302
M-2303
M-2305
M-2306

1 NOTE: DAF SUPPORT PIPE SCHEDULE IS FOUND ON M-005

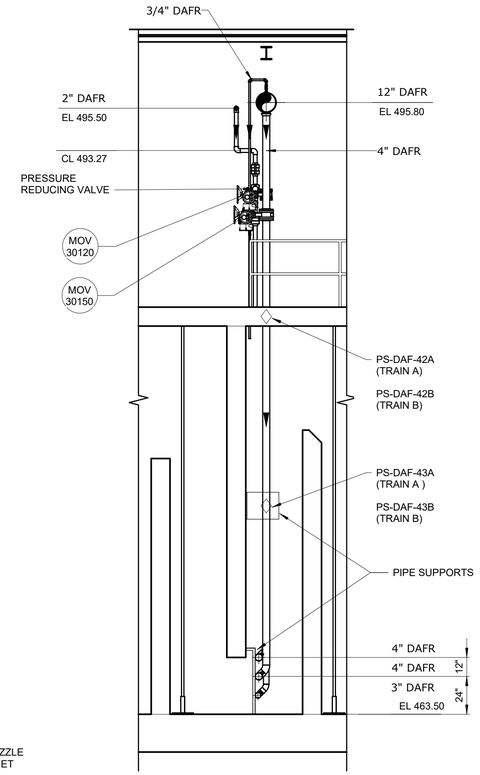

SECTION BB / M-102
NTS

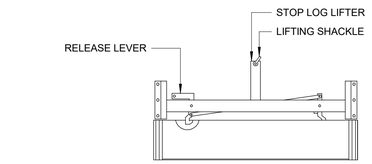

PLAN

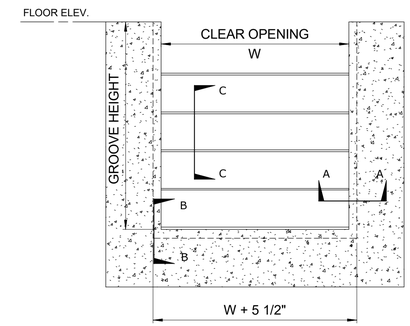

ELEVATION

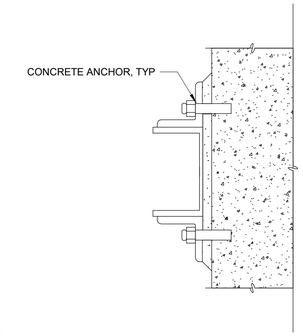

SECTION AA
CHANNEL MOUNT GROOVE OPTION

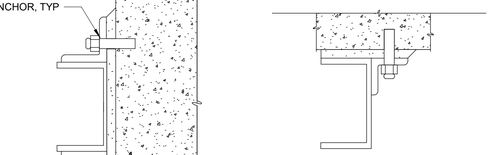

SECTION AA
FACEMOUNT GROOVE OPTION

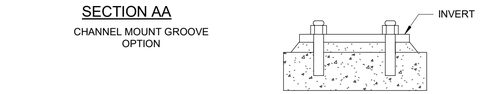

SECTION BB
CHANNEL MOUNT INVERT OPTION

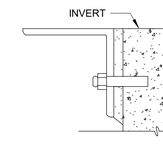

SECTION BB
FACEMOUNT INVERT OPTION

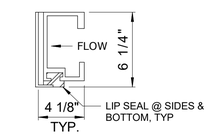

SECTION CC

STOP LOG DETAILS

DETAIL 7
NTS
M-2102
M-2105
M-2109
M-2202
M-2205

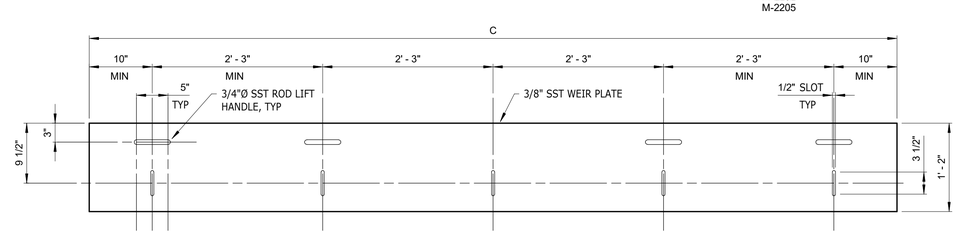

ELEVATION

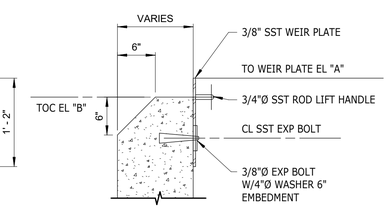

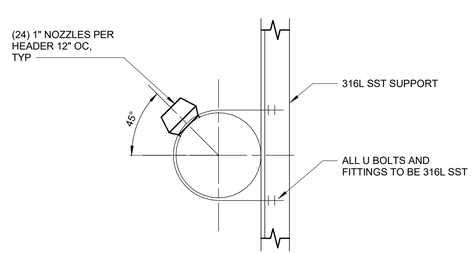

TYPICAL NOZZLE DETAIL

WEIR PLATE SCHEDULE				
LOCATION	QUANTITY	A	B	C
FILTERED WATER WEIR	2	EL 465.00	EL 464.83	15.5 FT
CLARIFIED WATER WEIR	10	EL 479.60	EL 479.42	23.5 FT 2

WEIR PLATE DETAIL

DETAIL 8
NTS
M-2201, M-2203
M-2204, M-2206
M-2702, M-2702
M-2709

NOTE:
1. NO SPACING SHALL BE GREATER THAN 2'-3". WHERE NECESSARY TO ACCOMMODATE LONGER WEIR PLATES, MORE SLOTS SHALL BE MADE AT EVEN SPACING.
2. WEIR PLATES SHALL BE BY THE MISCELLANEOUS & ORNAMENTAL IRON SUBCONTRACTOR. 2

DAFR PIPE SUPPORT LEGEND
(SEE M-005 AND M-006)
◆ FIXED SUPPORT
◇ SLIDING SUPPORT

REV	ISSUED FOR	DATE	BY
2	ADDENDUM NO. 5	APR 24	MWM
1	ADDENDUM NO. 3	MAR 24	MWM
0	ISSUED FOR BIDS	FEB 24	MWM

PROJECT ENGINEER: K. BARRETT
DESIGNED BY: J. CANTOR
DRAWN BY: D. KVOPKA
CHECKED BY: M. MORIN
IF THIS BAR DOES NOT MEASURE 1" THEN DRAWING IS NOT TO FULL SCALE 0 1/2" 1"

COMMONWEALTH OF MASSACHUSETTS MARC W. MORIN CIVIL No. 53793 REGISTERED PROFESSIONAL ENGINEER
04/23/2024

Hazen
HAZEN AND SAWYER
100 GREAT MEADOW ROAD, SUITE 702
WETHERSFIELD, CT 06109

SPRINGFIELD WATER AND SEWER COMMISSION

WEST PARISH WATER TREATMENT PLANT

FILED SUB-BID 2

MECHANICAL DETAILS - SHEET 2

DATE: FEBRUARY 2024
HAZEN NO.: 90398-004
CONTRACT NO.: 24-51
DRAWING NUMBER: M-102

Autodesk Docs://90398-004_West Parish Filter WTF/90398-004-M_Genl.rvt
4/18/2024 1:03:08 PM

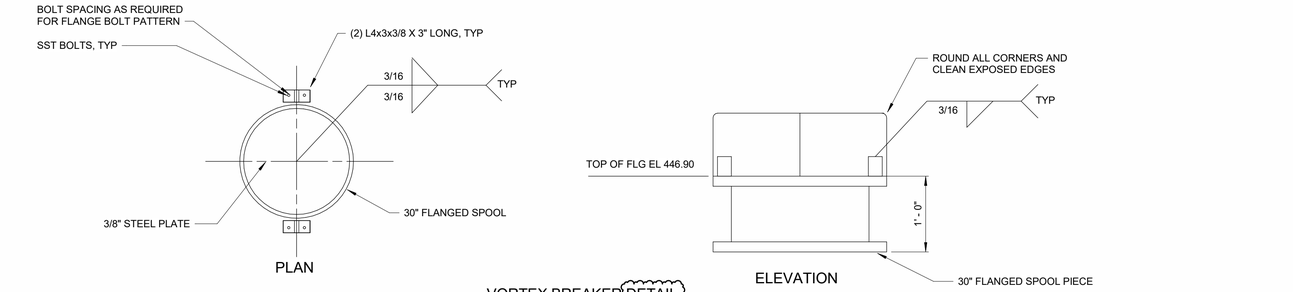

VORTEX BREAKER DETAIL 1

DETAIL 10

NTS M-4101 M-4701 M-4702

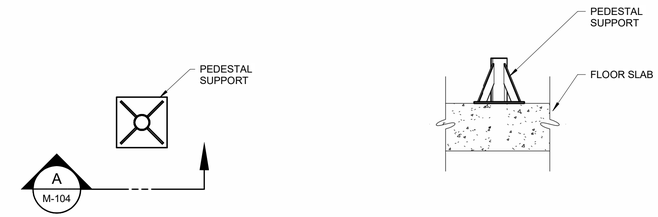

SECTION A M-104

NTS

PEDESTAL MOUNTED DAVIT SUPPORT

DETAIL 11

NTS M-2208 M-2209 M-2304

NOTES:
1. COORDINATE BASEPLATE SIZE AND ANCHOR BOLT REQUIREMENTS WITH THE MANUFACTURER.

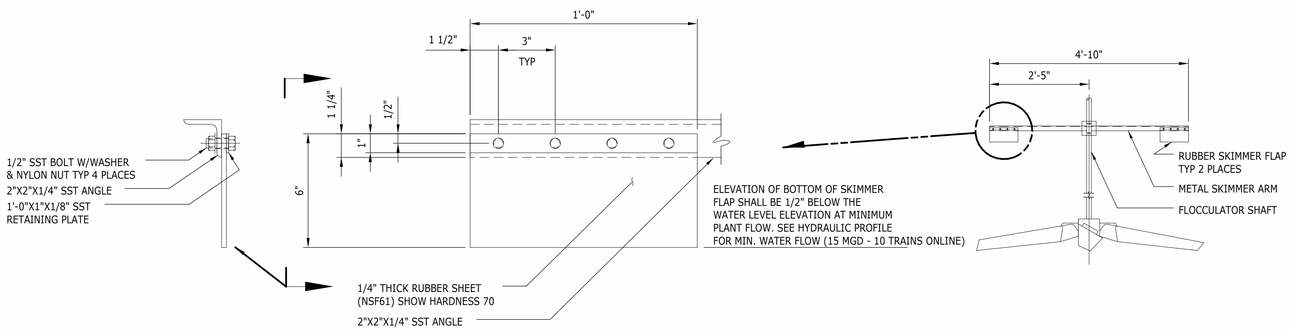

RUBBER SKIMMER FLAP

FLOCCULATOR SKIMMER DETAIL

DETAIL 12

NTS M-2102 M-2105 M-2202 M-2205

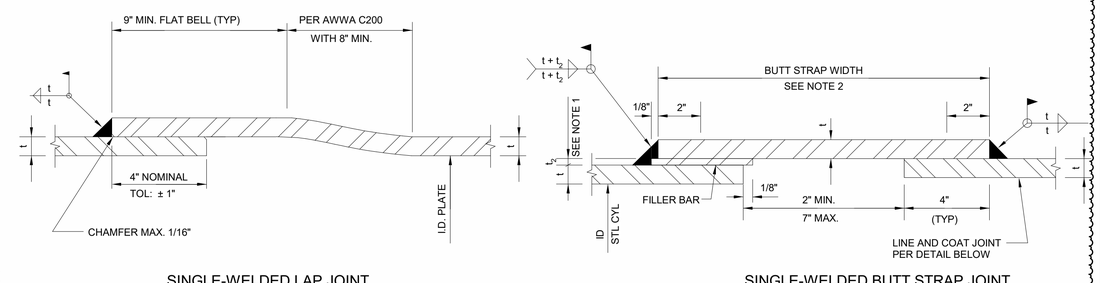

SINGLE-WELDED LAP JOINT

MAX. PULL 3/4"

SINGLE-WELDED BUTT STRAP JOINT

BUTT STRAP JOINT DETAIL NOTES:

1. THICKNESS "t_2" INDICATES OFFSET OF ID BETWEEN STEEL CYLINDERS. PROVIDE FILLER BAR WHERE "t_2" IS 3/16" OR GREATER.
2. UNLESS OTHERWISE NOTED, CONFORM BUTT STRAP WIDTH TO THE LIMITATIONS SHOWN FOR PIPE END SEPARATION AND OVERLAP REQUIREMENTS. THIS INCLUDES THE ADDITIONAL 3-INCH INCREASE IF A TEMPERATURE CONTROL JOINT IS REQUIRED AT A BUTT STRAP JOINT.
3. "t" INDICATES THE THICKNESS OF THE STEEL PLATE AT THE STATION WHERE USED. "t" IS SPECIFIED IN SECTIONS 40 05 24 23 AND 40 06 20.
4. SINGLE-WELDED DETAILS ARE APPLICABLE TO BURIED AND ENCASED STEEL PIPE WITH DIAMETER OF 30" AND LESS.
5. REFERENCE STEEL PIPE DETAILS ON THE CIVIL DRAWINGS (C-310 THROUGH C-313).

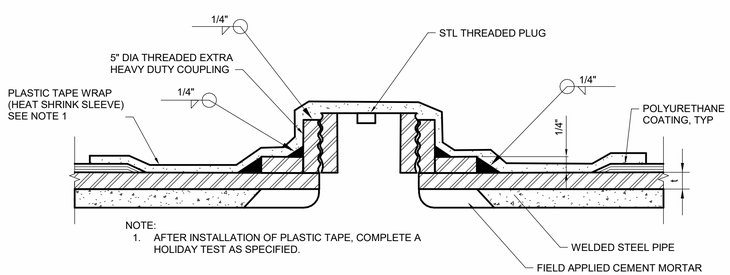

NOTE:
1. AFTER INSTALLATION OF PLASTIC TAPE, COMPLETE A HOLIDAY TEST AS SPECIFIED.

HAND HOLE

DETAIL 14

NTS

3. "t" INDICATES THE THICKNESS OF THE STEEL PLATE AT THE STATION WHERE USED. "t" IS SPECIFIED IN SECTIONS 40 05 24 23 AND 40 06 20.

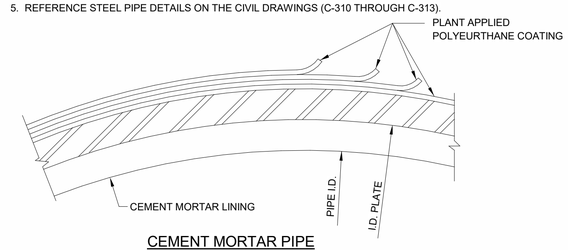

CEMENT MORTAR PIPE
COATING & LINING DETAIL

NTS

NOTE:

THICKNESS OF ALL COATINGS ARE SPECIFIED IN SECTION 40 05 24.23.

DETAIL 13

NTS C-310, C-311 C-312, C-313

REV	ISSUED FOR	DATE	BY
1	ADDENDUM NO. 5	APR 24	MWM
0	ISSUED FOR BIDS	FEB 24	MWM

PROJECT ENGINEER:	K. BARRETT
DESIGNED BY:	J. CANTOR
DRAWN BY:	D. KVOPKA
CHECKED BY:	M. MORIN

IF THIS BAR DOES NOT MEASURE 1" THEN DRAWING IS NOT TO FULL SCALE 0 1/2" 1"

COMMONWEALTH OF MASSACHUSETTS MARC W. MORIN CIVIL No. 53793 REGISTERED PROFESSIONAL ENGINEER

04/23/2024

Hazen

HAZEN AND SAWYER
100 GREAT MEADOW ROAD, SUITE 702
WETHERSFIELD, CT 06109

SPRINGFIELD WATER AND SEWER COMMISSION

WEST PARISH WATER TREATMENT PLANT

MECHANICAL DETAILS - SHEET 4

DATE:	FEBRUARY 2024
HAZEN NO.:	90398-004
CONTRACT NO.:	24-51
DRAWING NUMBER:	M-104

Autodesk Docs://90398-004_West Parish Filter WTF/90398-004-M_Gen.rvt
4/18/2024 1:04:51 PM

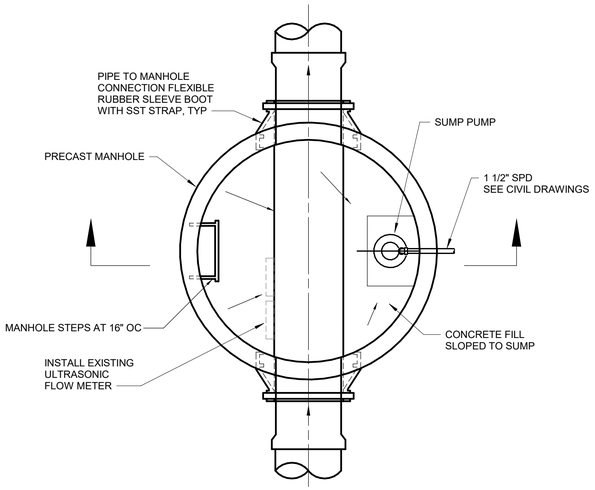

MANHOLE PLAN

C-33-0600

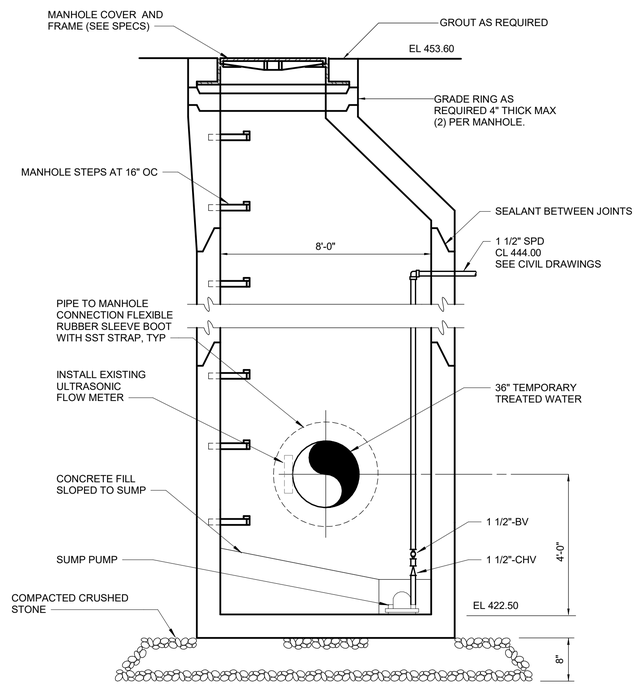

MANHOLE SECTION

C-33-0601

MANHOLE DETAIL

NTS

NOTES:
1. INSTALL FLOW METER PER SECTION 01 14 00.
2. SEE SECTION 33 05 61 FOR UTILITY STRUCTURE REQUIREMENTS

PUMP SCHEDULE

TAG	SYSTEM SERVED	LOCATION	MANUFACTURER		MA APPROVAL NUMBER	CONTROLS	TYPE	CAPACITY (GPM)	HEAD (FT)	SHUTOFF HEAD (FT)	SIZE (IN)		MOTOR		PUMPING FLUID		VOLT	PHASE	HZ	NOTES
			MAKE	MODEL							SUCT.	DISCH.	HP	TYPE	FLUID	TEMP (DEG F)				
SP-03	TEMPORARY TREATED WATER MANHOLE	UPPER LAGOON	MYERS	MCI050CI	P1-0117-310	FLOAT	CENTRIFUGAL SUMP	20	27	32	N/A	1-1/2"	1/2	SUBMERSIBLE	WATER	< 130	115	1	60	1

NOTES:
1. SEE SPECIFICATION 43 25 17 FOR CONSTRUCTION AND ACCESSORY DETAILS.

REV	ISSUED FOR	DATE	BY
0	ADDENDUM NO. 5	APR 24	MWM

PROJECT ENGINEER: K. BARRETT
DESIGNED BY: J. CANTOR
DRAWN BY: D. KVOPKA
CHECKED BY: M. MORIN
IF THIS BAR DOES NOT MEASURE 1" THEN DRAWING IS NOT TO FULL SCALE 0 1/2" 1"

COMMONWEALTH OF MASSACHUSETTS MARC W. MORIN CIVIL No. 53793 REGISTERED PROFESSIONAL ENGINEER
04/23/2024

Hazen
HAZEN AND SAWYER
100 GREAT MEADOW ROAD, SUITE 702
WETHERSFIELD, CT 06109

SPRINGFIELD WATER AND SEWER COMMISSION

WEST PARISH WATER TREATMENT PLANT

MECHANICAL DETAILS - SHEET 5

DATE: FEBRUARY 2024
HAZEN NO.: 90398-004
CONTRACT NO.: 24-51
DRAWING NUMBER: M-105

Autodesk Docs://90398-004_West Parish Filter WTF/90398-004-M_Gen1.rvt
4/18/2024 1:04:52 PM

OFFICE AREA BASIS OF DESIGN

PARAMETER	VALUE	BASIS
OUTDOOR DESIGN DB TEMP - HEATING	1.0 F	ASHRAE 99.6 PERCENTILE - WESTFIELD-BARNES AIRPORT (2021)
OUTDOOR DESIGN DB TEMP - COOLING	91.1 F	ASHRAE 0.4 PERCENTILE - WESTFIELD-BARNES AIRPORT (2021)
OUTDOOR DESIGN MCWB TEMP - COOLING	72.3 F	ASHRAE 0.4 PERCENTILE - WESTFIELD-BARNES AIRPORT (2021)
OUTDOOR DESIGN DB EXTREME LOW TEMP	-12 F	ASHRAE 5-YEAR EXTREME - WESTFIELD-BARNES AIRPORT (2021)
ADMIN AREA MIN / MAX OCCUPIED DESIGN TEMP	68 F / 75 F	IBC 1204 / IECC C302
OFFICE OA VENTILATION RATE	5 CFM / PER + 0.06 CFM/SF	IMC TABLE 403.3.1.1
CONFERENCE / TRAINING ROOM OA VENTILATION RATE	5 CFM / PER + 0.06 CFM/SF	IMC TABLE 403.3.1.1
CORRIDOR OA VENTILATION RATE	0.06 CFM/SF	IMC TABLE 403.3.1.1
LOBBY / RECEPTION OA VENTILATION RATE	5 CFM / PER + 0.06 CFM/SF	IMC TABLE 403.3.1.1
BREAK ROOM OA VENTILATION RATE	5 CFM / PER + 0.06CFM/SF	IMC TABLE 403.3.1.1
LABORATORY OA VENTILATION	1.0 CFM/SF	ASHRAE 62.1 TABLE 6.2.2.1
RESTROOM OA VENTILATION RATE	50 CFM/TOILET	IMC TABLE 403.3.1.1, CONTINUOUS DURING OCCUPIED HOURS
JANITOR CLOSET OA VENTILATION RATE	1.0 CFM/SF	ASHRAE 62.1 TABLE 6.5
SHOWER OA VENTILATION RATE	20 CFM/HEAD	IMC TABLE 403.3.1.1, CONTINUOUS DURING OCCUPIED HOURS
LOCKER ROOM OA VENTILATION RATE	0.5 CFM/SF	ASHRAE 62.1 TABLE 6.5
STORAGE ROOM OA VENTILATION RATE	N/A	NOT OCCUPIED
MECH/ELEC ROOM OA VENTILATION RATE	N/A	NOT OCCUPIED

PROCESS AREA BASIS OF DESIGN

PARAMETER	VALUE	BASIS
OUTDOOR DESIGN DB TEMP - HEATING	1.0 F	ASHRAE 99.6 PERCENTILE - WESTFIELD-BARNES AIRPORT (2021)
OUTDOOR DESIGN DB TEMP - COOLING	91.1 F	ASHRAE 0.4 PERCENTILE - WESTFIELD-BARNES AIRPORT (2021)
OUTDOOR DESIGN MCWB TEMP - COOLING	72.3 F	ASHRAE 0.4 PERCENTILE - WESTFIELD-BARNES AIRPORT (2021)
OUTDOOR DESIGN DB EXTREME LOW TEMP	-12 F	ASHRAE 5-YEAR EXTREME - WESTFIELD-BARNES AIRPORT (2021)
FILTER / DAF ROOM MAX SUPPLY AIR RATE (SUMMER)	2.0 ACH	MOISTURE/HEAT REMOVAL AND AIR MOVEMENT IN OPEN TANK AREAS
FILTER / DAF ROOM MIN OA VENTILATION RATE (WINTER)	0.5 ACH	MINIMUM OUTDOOR AIR IN OPEN TANK AREAS
FILTER / DAF ROOM MIN / MAX DESIGN TEMP	50 F / 104 F	FREEZE PROTECTION / MAX RATING FOR ELECTRICAL COMPONENTS
PIPE GALLERY SUPPLY AIR RATE	2.0 ACH	AIR MOVEMENT FOR DEHUMIDIFICATION SYSTEM
PIPE GALLERY OA VENTILATION RATE	0.25 ACH	MINIMUM OUTDOOR AIR FOR PROCESS AREA
PIPE GALLERY MIN / MAX INDOOR TEMP	50 F / 104 F	FREEZE PROTECTION / MAX RATING FOR ELECTRICAL COMPONENTS
PIPE GALLERY AIR DEWPOINT	VARIABLE	SA DEWPOINT SET TO 2-3 DEGREES BELOW PROCESS WATER TEMP TO MINIMIZE CONDENSATION
SODIUM HYPOCHLORITE STORAGE OA VENTILATION RATE	1.5 CFM/SF	ASHRAE 62.1 TABLE 6.5
SODIUM HYPOCHLORITE STORAGE MIN / MAX DESIGN TEMP	50 F / 70F	FREEZE PROTECTION / CONTROL HYPO DEGRADATION
SODIUM HYDROXIDE STORAGE OA VENTILATION RATE	1.5 CFM/SF	ASHRAE 62.1 TABLE 6.5
SODIUM HYDROXIDE STORAGE MIN / MAX DESIGN TEMP	80 F / 104 F	PREVENT HYDROXIDE SLUSHING / MAX RATING FOR ELECTRICAL COMPONENTS
PHOSPHORIC ACID STORAGE OA VENTILATION RATE	1.5 CFM/SF	ASHRAE 62.1 TABLE 6.5
PHOSPHORIC ACID STORAGE MIN / MAX DESIGN TEMP	50 F / 104 F	FREEZE PROTECTION / MAX RATING FOR ELECTRICAL COMPONENTS
PACL / POLYMER / ACID STORAGE OA VENTILATION RATE	1.0 CFM/SF	IMC 502.8
PACL / POLYMER / ACID STORAGE MIN / MAX DESIGN TEMP	50 F / 104 F	FREEZE PROTECTION / MAX RATING FOR ELECTRICAL COMPONENTS
STORAGE / CORRIDOR / STAIR / EQUIP. MIN / MAX DESIGN TEMP	50 F / 104 F	FREEZE PROTECTION / MAX RATING FOR ELECTRICAL COMPONENTS
STORAGE ROOM OA VENTILATION RATE	N/A	NOT REQUIRED IN IMC TABLE 403.3.1.1
CORRIDOR VENTILATION RATE	0.06 CFM/SF	IMC TABLE 403.3.1.1
STAIR VENTILATION RATE	N/A	NOT REQUIRED IN IMC TABLE 403.3.1.1
HVAC / MECHANICAL / ELECTRICAL ROOM VENTILATION RATE	5 CFM / PERSON	NOMINAL RATE REQUESTED BY OWNER, THERMOSTATIC FAN FOR SUMMER HEAT REMOVAL
ELECTRICAL ROOM MIN / MAX DESIGN TEMP	50 F / 80 F	AIR CONDITIONING PROVIDED FOR LARGE COOLING LOADS
WORKSHOP OA VENTILATION RATE	10 CFM / PERSON + 0.18 CFM/SF	ASHRAE 62.1 TABLE 6.2.2.1
WORKSHOP MIN/MAX INDOOR DESIGN TEMP	68 F / 75 F	OCCUPANT COMFORT
DEWATERING BLDG TRUCK BAY MIN / MAX DESIGN TEMP	50 F / 104 F	FREEZE PROTECTION / MAX RATING FOR ELECTRICAL COMPONENTS
DEWATERING BLDG TRUCK BAY MAX SUPPLY AIR RATE (SUMMER)	1.0 ACH	MOISTURE/ODOR REMOVAL FROM DEWATERED SLUDGE CAKE
DEWATERING BLDG TRUCK BAY MIN OA VENTILATION RATE (WINTER)	0.25 ACH	MINIMUM OUTDOOR AIR FOR PROCESS AREA
DEWATERING BLDG CENTRIFUGE ROOM MIN / MAX DESIGN TEMP	50 F / 104 F	FREEZE PROTECTION / MAX RATING FOR ELECTRICAL COMPONENTS
DEWATERING BLDG CENTRIFUGE ROOM MAX SUPPLY AIR RATE (SUMMER)	1.0 ACH	MOISTURE/ODOR REMOVAL FROM DEWATERED SLUDGE CAKE
DEWATERING BLDG CENTRIFUGE ROOM MIN OA VENTILATION RATE (WINTER)	0.25 ACH	MINIMUM OUTDOOR AIR FOR PROCESS AREA

PIPE AND PIPE INSULATION SCHEDULE

PIPE SYSTEM	PIPE SYSTEM ABBREVIATION	INSTALLED PIPE LOCATION	PIPE DIAMETER RANGE	PIPE MATERIAL	PIPE JOINT TYPE	PIPE FITTING TYPE	PIPE FLANGE TYPE	PIPE INSULATION MATERIAL	PIPE INSULATION THICKNESS
COOLING WATER	CWS / CWR	ALL INTERIOR LOCATIONS	2-1/2" AND LARGER	CARBON STEEL SCH. 40	BUTT WELDED / FLANGED	ASME B16.9 - 150 LB	ANSI B16.5 - WELD NECK	CLOSED CELL ELASTOMERIC	1"
COOLING WATER	CWS / CWR	ALL INTERIOR LOCATIONS	UP TO 2"	CARBON STEEL SCH. 80	SOCKET WELDED / THREADED	ANSI B16.11 - 3000 LB	ANSI B16.5 - SLIP ON	CLOSED CELL ELASTOMERIC	1"
COOLING WATER	CWS / CWR	ALL INTERIOR LOCATIONS	UP TO 4"	COPPER TYPE K	PRESS-CONNECT OR SOLDER	ANSI B16.18 / B16.22 / B16.51	NA	CLOSED CELL ELASTOMERIC	1"
REFRIGERANT GAS	RG	ALL INTERIOR LOCATIONS	ALL	COPPER TYPE ACR-L	PRESS-CONNECT OR BRAZE	ANSI B16.18 / B16.22 / B16.51	NA	CLOSED CELL ELASTOMERIC	2-1/2"
REFRIGERANT GAS	RG	ALL EXTERIOR LOCATIONS	ALL	COPPER TYPE ACR-L	PRESS-CONNECT OR BRAZE	ANSI B16.18 / B16.22 / B16.51	NA	CLOSED CELL ELASTOMERIC WITH ALUMINUM JACKET	2-1/2"
REFRIGERANT LIQUID	RL	ALL INTERIOR LOCATIONS	ALL	COPPER TYPE ACR-L	PRESS-CONNECT OR BRAZE	ANSI B16.18 / B16.22 / B16.51	NA	CLOSED CELL ELASTOMERIC	1"
REFRIGERANT LIQUID	RL	ALL EXTERIOR LOCATIONS	ALL	COPPER TYPE ACR-L	PRESS-CONNECT OR BRAZE	ANSI B16.18 / B16.22 / B16.51	NA	CLOSED CELL ELASTOMERIC WITH ALUMINUM JACKET	1"
CONDENSATE DRAIN	CD	ALL INTERIOR LOCATIONS	ALL	COPPER TYPE DWV	SOLDER	ANSI B16.23 / B16.29	NA	CLOSED CELL ELASTOMERIC	1"
CONDENSATE DRAIN	CD	ALL EXTERIOR LOCATIONS	ALL	COPPER TYPE DWV	SOLDER	ANSI B16.23 / B16.29	NA	NONE	NA

DUCT AND DUCT INSULATION SCHEDULE

HVAC SYSTEM	DUCT SYSTEM ABBREVIATION	SYSTEM TYPE	INSTALLED DUCT LOCATION	DUCT MATERIAL	DUCT INSULATION TYPE	INSULATION THICKNESS
FILTER OPERATING AREA HEATING AND VENTILATIING UNIT	HV-01	SUPPLY	FILTER OPERATING AREA, CENTRAL PIPE GALLERY, CHEMICAL CORRIDOR	STAINLESS STEEL	NONE	N/A
DAF OPERATING AREA HEATING AND VENTILATING UNIT	HV-02	SUPPLY	DAF OPERATING AREA	STAINLESS STEEL	NONE	N/A
CHEMICAL STORAGE HEATING AND VENTILATING UNIT	HV-03	SUPPLY	CENTRAL PIPE GALLERY, CHEMICAL CORRIDOR, CHEMICAL STORAGE ROOMS	STAINLESS STEEL	NONE	N/A
DWB PROCESS AREA HEATING AND VENTILATING UNIT	HV-04	SUPPLY	DEWATERING BUILDING PROCESS AREAS	STAINLESS STEEL	NONE	N/A
OFFICE AREA DEDICATED OUTDOOR AIR SYSTEM	DOAS-01	SUPPLY / RETURN	ADMINISTRATIVE AREA OFFICE AREA RETURN AIR PLENUM	GALVANIZED STEEL	GLASS BLANKET	1-1/2"
LABORATORY DEDICATED OUTDOOR AIR SYSTEM	DOAS-01	SUPPLY	LABORATORY RETURN AIR PLENUM	GALVANIZED STEEL	GLASS BLANKET	1-1/2"
PIPE GALLERY DEHUMIDIFICATION UNIT	DHU-01	SUPPLY / RETURN	CENTRAL OPERATING AREA, CENTRAL PIPE GALLERY, FILTER PIPE GALLERY	STAINLESS STEEL	NONE	N/A
WORKSHOP BLOWER COIL UNIT	BCU-01	SUPPLY / RETURN	WORKSHOP	GALVANIZED STEEL	NONE	N/A
HYPOCHLORITE ROOM EXHAUST FAN	EF-01	EXHAUST	HYPOCHLORITE STORAGE ROOM	FRP	NONE	N/A
PACL ROOM EXHAUST FAN	EF-02	EXHAUST	PACL STORAGE ROOM	FRP	NONE	N/A
FILTER AID POLYMER ROOM EXHAUST FAN	EF-03	EXHAUST	FILTER AID POLYMER STORAGE ROOM	FRP	NONE	N/A
HYDROXIDE ROOM EXHAUST FAN	EF-04	EXHAUST	HYDROXIDE STORAGE ROOM	FRP	NONE	N/A
PHOSPHORIC ACID ROOM EXHAUST FAN	EF-05	EXHAUST	PHOSPHORIC ACID STORAGE ROOM	FRP	NONE	N/A
COAGULANT POLYMER ROOM EXHAUST FAN	EF-06	EXHAUST	COAGULANT POLYMER STORAGE ROOM	FRP	NONE	N/A
FUTURE CHEMICAL ROOM EXHAUST FAN	EF-07	EXHAUST	FUTURE CHEMICAL STORAGE ROOM	FRP	NONE	N/A
FILTER AREA EXHAUST FAN	EF-08	RETURN / EXHAUST	FILTER AREA	STAINLESS STEEL	NONE	N/A
DAF AREA EXHAUST FAN	EF-09	RETURN / EXHAUST	DAF AREA	STAINLESS STEEL	NONE	N/A
WORKSHOP EXHAUST FAN	EF-10	EXHAUST	WORKSHOP	N/A	N/A	N/A
CHEMICAL ASSAY ROOM EXHAUST FAN	EF-11	EXHAUST	CHEMICAL ASSAY ROOM, CENTRAL GALLERIES	STAINLESS STEEL	NONE	N/A
PROCESS AREA RESTROOM EXHAUST FAN	EF-12	EXHAUST	RESTROOM, JANITOR CLOSET, CENTRAL GALLERIES	STAINLESS STEEL	NONE	N/A
DWB PROCESS AREA EXHAUST FAN	EF-13	RETURN / EXHAUST	DWB CENTRIFUGE ROOM, SOLIDS REMOVAL ROOM	STAINLESS STEEL	NONE	N/A
DWB POLYMER ROOM EXHAUST FAN	EF-14	EXHAUST	DWB POLYMER STORAGE ROOM	FRP	N/A	N/A
DWB RESTROOM EXHAUST FAN	EF-15	EXHAUST	DWB RESTROOM, JANITOR CLOSET	STAINLESS STEEL	NONE	N/A
DWB PUMP ROOM EXHAUST FAN	EF-16	EXHAUST	DWB PUMP ROOM, SOLIDS REMOVAL ROOM	STAINLESS STEEL	NONE	N/A
RESTROOM AND LOCKER ROOM EXHAUST FAN	EF-17	EXHAUST	ADMINISTRATIVE AREA LOCKER ROOM, SHOWERS, RESTROOMS, RETURN AIR PLENUM	STAINLESS STEEL	GLASS BLANKET	1-1/2"
FUME HOOD EXHAUST FAN	EF-18	EXHAUST	LABORATORY RETURN AIR PLENUM	FRP	NONE	N/A
LABORATORY EXHAUST FAN	EF-19	EXHAUST	LABORATORY RETURN AIR PLENUM	STAINLESS STEEL	NONE	N/A
ELEVATOR CONTROL ROOM EXHAUST FAN	EF-20	EXHAUST	ADMINISTRATIVE AREA PLENUM	GALVANIZED STEEL	NONE	NA
ELEVATOR SHAFT EXHAUST FAN	EF-21	EXHAUST	ADMINISTRATIVE AREA PLENUM	GALVANIZED STEEL	NONE	NA
COMPRESSOR COOLING SUPPLY FAN	SF-01	SUPPLY	CENTRAL OPERATING AREA	STAINLESS STEEL	NONE	NA
PIPE GALLERY DEHUMIDIFICATION UNIT	DHU-01	OUTDOOR / REACTIVATION	CENTRAL OPERATING AREA	STAINLESS STEEL	GLASS BLANKET	1-1/2"

1

REV	ISSUED FOR	DATE	BY
1	ADDENDUM NO. 5	APR 24	MWM
0	ISSUED FOR BIDS	FEB 24	MWM

PROJECT ENGINEER: K. BARRETT
DESIGNED BY: D. WITTE
DRAWN BY: D. WITTE
CHECKED BY: S. BARRESE

IF THIS BAR DOES NOT MEASURE 1" THEN DRAWING IS NOT TO FULL SCALE
0 1/2" 1"

COMMONWEALTH OF MASSACHUSETTS
DAVID WITTE
No. 58104
PROFESSIONAL ENGINEER

Hazen

HAZEN AND SAWYER
100 GREAT MEADOW ROAD, SUITE 702
WETHERSFIELD, CT 06109

SPRINGFIELD WATER AND SEWER COMMISSION

WEST PARISH WATER TREATMENT PLANT

FILED SUB-BID

HVAC
BASIS OF DESIGN

DATE: FEBRUARY 2024
HAZEN NO.: 90398-004
CONTRACT NO.: 24-51
DRAWING NUMBER: H-002

Autodesk Docs://90398-004_West Parish Filter WTF/90398-004 GENL-H.rvt
4/12/2024 9:43:59 PM

HVAC - HV UNIT SCHEDULE 1

TAG	LOCATION	AREA SERVED	BASIS OF DESIGN		TYPE	SUPPLY FAN										RETURN FAN									DIRTY FILTER DP (INWG)
			MANUFACTURER	MODEL		TOTAL CFM	WINTER OA CFM	SUMMER OA CFM	FAN TYPE	ESP (INWG)	TSP (INWG)	MIN. EFF. (%)	MAX. BHP AT DESIGN POINT	FAN RPM	MOTOR HP RATING	WINTER RA CFM	SUMMER RA CFM	FAN TYPE	ESP (INWG)	TSP (INWG)	MIN. EFF. (%)	MAX. BHP AT DESIGN POINT	FAN RPM	MOTOR HP RATING	
HV-01	TREATMENT BUILDING ROOF	FILTER AREA	TRANE	HORIZON OANE600A4	PACKAGED ROOFTOP	10900	3700	10900	DIRECT DRIVE PLENUM x 2	1.0	2.0	55%	8.23	BY VENDOR	2 X 5HP	7200	0	NA	NA	NA	NA	NA	NA	NA	0.5
HV-02	TREATMENT BUILDING ROOF	DAF ROOM	TRANE	HORIZON OANE600A4	PACKAGED ROOFTOP	9000	2250	9000	DIRECT DRIVE PLENUM	1.0	1.8	38%	6.6	BY VENDOR	10HP	6750	0	NA	NA	NA	NA	NA	NA	NA	0.5
HV-03	TREATMENT BUILDING ROOF	CHEMICAL AREA	TRANE	HORIZON OANE600A4	PACKAGED ROOFTOP	10400	10400	10400	DIRECT DRIVE PLENUM x 2	2.75	3.8	68%	9.1	BY VENDOR	2 X 5HP	NA	NA	NA	NA	NA	NA	NA	NA	NA	0.5
HV-04	DEWATERING BUILDING ROOF	DEWATERING BUILDING	TRANE	HORIZON OAKE300A4	PACKAGED ROOFTOP	6000	1500	6000	DIRECT DRIVE PLENUM	1.0	1.8	55%	3.1	BY VENDOR	5	4500	0	NA	NA	NA	NA	NA	NA	NA	0.5

HVAC - HV UNIT SCHEDULE 2

TAG	HEAT PUMP COIL DESIGN POINT 1				HEAT PUMP COIL DESIGN POINT 2				HEAT PUMP COMPONENTS						PROCESS AIR COIL				OUTDOOR COIL		MIN. OA TEMP FOR HEAT PUMP OPERATION (°F)	BACKUP ELECTRIC COIL				POWER					NOTES
	MIN MBH	MIN COP	EAT/LAT (°F)	OAT/RAT (°F)	MIN MBH	MIN COP	EAT/LAT (°F)	OAT/RAT (°F)	COMPRESSOR QTY	COMPRESSOR RLA EA	CONDENSOR FAN QTY	CONDENSER FAN HP EA	R410A CIRCUIT QTY	R410A CHARGE PER CIRCUIT	COIL AREA (SF)	ROWS/ FPI	COIL CFM	COIL VELOCITY (FPM)	COIL AREA (SF)	ROWS /FPI		CFM	KW	EAT/LAT (°F)	OAT/RAT (°F)	VOLT	PH	HZ	FLA	MCA	
HV-01	343.1	3.4	33.0 / 58.8	0.0 / 50.0	428.3	3.6	41.5 / 74.5	25.0 / 50.0	4	18.6	4	1	2	46.6 / 46.6	27.6	4 / 12	10900	395	61.9	2 / 12	0	10900	72.6	29.0 / 50.0	-12.0 / 50.0	460	3	60	179.3	184	1, 2
HV-02	320.9	3.0	37.5 / 66.1	0.0 / 50.0	412.9	3.3	43.75 / 82.4	25.0 / 50.0	4	18.6	4	1	2	46.6 / 46.6	27.6	4 / 12	9000	326	61.9	2 / 12	0	9000	44.2	34.5 / 50.0	-12.0 / 50.0	460	3	60	146	165	1, 2
HV-03	464.6	4	20.0 / 55.6	20.0 / -	525.8	3.9	30.0 / 71.3	30.0 / -	4	23.1	4	1	2	55.2 / 45.3	27.6	4 / 12	10400	376	61.9	2 / 12	20	10400	204.1	-12.0 / 50	-12.0 / -	460	3	60	363	368	1, 2, 3
HV-04	204.9	3.8	37.5 / 66.1	0.0 / 50.0	227.9	3.7	43.5 / 78.8	25.0 / 50.0	2	18.6	3	1	2	29.9 / 29.9	20.0	4 / 12	6000	300	37.5	2 / 12	0	6000	117.7	-12.0 / 50.0	-12.0 / -	460	3	60	193.9	198.5	1, 2

NOTES:

1. SEE SPEC SECTION 23 74 00 FOR CONSTRUCTION AND ACCESSORY DETAILS
2. HEAT PUMP SYSTEM SHALL BE CAPABLE OF OPERATING AT DESIGN POINT 1 AS WELL AS AT DESIGN POINT 2 WITHOUT BACKUP ELECTRIC COIL
3. UNIT SHALL BE PROVIDED WITH MODULATING HOT GAS REHEAT COIL TO INCREASE DRY BULB TEMPERATURE BY NO LESS THAN 20 DEGREES FOR REDUCTION OF RELATIVE HUMIDITY

HVAC - DOAS UNIT SCHEDULE 1

TAG	LOCATION	AREA SERVED	BASIS OF DESIGN		TYPE	SUPPLY FAN										RETURN FAN									ENTHALPHY RECOVERY WHEEL									
																									WINTER DRY BULB / WET BULB				SUMMER DRY BULB / WET BULB					
			MANUFACTURER	MODEL		TOTAL CFM	WINTER OA CFM	SUMMER OA CFM	FAN TYPE	ESP (INWG)	TSP (INWG)	MIN. EFF. (%)	MAX. BHP AT DESIGN POINT	FAN RPM	MOTOR HP RATING	WINTER RA CFM	SUMMER RA CFM	FAN TYPE	ESP (INWG)	TSP (INWG)	MIN. EFF. (%)	MAX. BHP AT DESIGN POINT	FAN RPM	MOTOR HP RATING	OA EAT (°F)	OA LAT (°F)	RA EAT (°F)	RA LAT (°F)	OA EAT (°F)	OA LAT (°F)	RA EAT (°F)	RA LAT (°F)	OUTSIDE AIR WHEEL DP (INWG)	RETURN AIR WHEEL DP (INWG)
DOAS-01	ADMIN ROOF	OFFICES	TRANE	HORIZON OAKE144A4	PACKAGED ROOFTOP	2260	2260	2260	DIRECT DRIVE PLENUM	1.0	2.10	70%	1.05	BY VENDOR	2	1370	1370	DIRECT DRIVE PLENUM	0.75	1.40	75%	0.41	BY VENDOR	1	0.7 / -1.0	44.3 / 43.1	70.0 / 63.0	17.7 / 16.4	91.1 / 72.3	82.0 / 69.9	75.0 / 68.0	90.3 / 72.3	0.66	0.38
DOAS-02	ADMIN ROOF	LABORATORY	TRANE	HORIZON OAKE144E3	PACKAGED ROOFTOP	2075	2075	2075	DIRECT DRIVE PLENUM	1.0	1.9	70%	0.66	BY VENDOR	1	NA	NA	NA	NA	NA	NA	NA	NA	NA	NA	NA	NA	NA	NA	NA	NA	NA	NA	NA

HVAC - DOAS UNIT SCHEDULE 2

TAG	OA DIRTY FILTER DP (IN WG)	RA DIRTY FILTER DP (IN WG)	HEAT PUMP COIL DESIGN POINT 1				HEAT PUMP COIL DESIGN POINT 2				HEAT PUMP COOLING					HEAT PUMP COMPONENTS						PROCESS AIR COIL			
			MIN MBH	MIN COP	EAT/LAT	OAT	MIN MBH	MIN COP	EAT/LAT	OAT	MIN SENS (MBH)	MIN TOTAL (MBH)	MIN EER	EAT DB/WB	LAT DB/WB	COMPRESSOR QTY	COMPRESSOR RLA EA	CONDENSOR FAN QTY	CONDENSER FAN HP EA	R410A CKT QTY	R410A CHARGE PER CIRCUIT	COIL AREA (SF)	ROWS/FPI	CFM	COIL VELOCITY (FPM)
DOAS-01	0.5	0.25	85.3	3.9	0.0 / 30.6	0.0	115.9	3.9	25.0 / 68.9	25.0	76.2	134.2	12.0	82.0 / 69.9	49.7 / 49.3	2	9.7	3	1	2	22.8 / 18.1	10	4 / 12	2130	222
DOAS-02	0.5	NA	91	4.2	0.0 / 34.6	0.0	116.1	3.8	25.0 / 71.6	25.0	88.2	36.91	11.3	91.1 / 72.3	50.5	2	20.4	3	1	2	22.8 / 18.1	10	4 / 12	2080	208

HVAC - DOAS UNIT SCHEDULE 3

TAG	OUTDOOR COIL		BACKUP ELECTRIC COIL				VOLT	PH	HZ	FLA	MCA	NOTES
	COIL AREA (SF)	ROWS/FPI	CFM	KW	EAT/LAT (°F)	OAT (°F)						
DOAS-01	30	2 / 12	2130	45.2	-12.0 / 55.0	-12.0	460	3	60	85.0	102.5	1, 2, 3
DOAS-02	30	2 / 12	2080	50.7	-12.0 / 65.0	-12.0	460	3	60	82.2	99.7	1, 2, 3

NOTES:

1. SEE SPEC SECTION 23 74 01 FOR CONSTRUCTION AND ACCESSORY DETAILS
2. HEAT PUMP SYSTEM SHALL BE CAPABLE OF OPERATING AT DESIGN POINT 1 AS WELL AS AT DESIGN POINT 2 WITHOUT BACKUP ELECTRIC COIL
3. UNIT SHALL BE PROVIDED WITH MODULATING HOT GAS REHEAT COIL TO INCREASE DRY BULB TEMPERATURE BY NO LESS THAN 25 DEGREES FOR REDUCTION OF RELATIVE HUMIDITY

HVAC - COOLING WATER PUMP SCHEDULE

TAG	LOCATION	AREA SERVED	MANUFACTURER		TYPE	CAPACITY (GPM)	HEAD (FT)	SHUT OFF HEAD (FT)	MIN. NPSH REQ'D (FT)	MIN. EFF. (%)	SIZE (IN)				MOTOR				MOTOR	PUMPING FLUID				POWER			NOTES
			MAKE	MODEL							SUCT.	DISCH.	IMPELLER	MAX. IMPELLER	OPERATING BHP	RUN OUT BHP	RATED HP	RATED RPM	VFD	SPEC. GRAVITY	FLUID	TEMPERATURE	VISCOSITY (LB/FT-S)	VOLT	PH	HZ	
CWP-01	ADMIN BUILDING	FREE COOLING SYSTEM	BELL & GOSSETT	E-1510 2 GB	END SUCTION BASE MOUNTED	240	105	122	8.24	64.6	3	2	11.625	13.5	10.1	14.8	15	1750	YES	1.026	30% PG	30 F	0.005	460	3	60	1
CWP-02	ADMIN BUILDING	FREE COOLING SYSTEM	BELL & GOSSETT	E-1510 2 GB	END SUCTION BASE MOUNTED	240	105	122	8.24	64.6	3	2	11.625	13.5	10.1	14.8	15	1750	YES	1.026	30% PG	30 F	0.005	460	3	60	1

NOTES:

1. SEE SPEC SECTION 23 21 23 FOR CONSTRUCTION AND ACCESSORY DETAILS

REV	ISSUED FOR	DATE	BY
1	ADDENDUM NO. 5	APR 24	MWM
0	ISSUED FOR BIDS	FEB 24	MWM

PROJECT ENGINEER: K. BARRETT
DESIGNED BY: D. WITTE
DRAWN BY: R. CHIN
CHECKED BY: S. BARRESE

IF THIS BAR DOES NOT MEASURE 1" THEN DRAWING IS NOT TO FULL SCALE (0 1/2" 1")

COMMONWEALTH OF MASSACHUSETTS — DAVID WITTE No. 58104 — PROFESSIONAL ENGINEER

Hazen
HAZEN AND SAWYER
100 GREAT MEADOW ROAD, SUITE 702
WETHERSFIELD, CT 06109

SPRINGFIELD WATER AND SEWER COMMISSION

WEST PARISH WATER TREATMENT PLANT

FILED SUB-BID

HVAC
EQUIPMENT SCHEDULES - SHEET 1

DATE: FEBRUARY 2024
HAZEN NO.: 90398-004
CONTRACT NO.: 24-51
DRAWING NUMBER: H-025

Autodesk Docs://90398-004_West Parish Filter WTF/90398-004 GENL-H.rvt
4/12/2024 9:50:16 PM

PLUMBING BACKFLOW PREVENTER ASSEMBLY SCHEDULE

TAG	QUANTITY	ASSEMBLY TYPE	SYSTEM SERVED	MAKE	MODEL	MA APPROVAL NUMBER	NOMINAL SIZE (IN)	ACCESSORIES	DRAINAGE PROVISION	DESIGN FLOW (GPM)	DESIGN PRESSURE LOSS (PSI)	INLET JOINT	OUTLET JOINT	VALVE TYPE	CROSS CONNECTION REGULATION	NOTES
BFP-01	1	REDUCED PRESSURE ZONE	TREATMENT BUILDING (2000) PROCESS WATER BACKUP CONNECTION	WATTS	957-FS	P3-0717-660	4	AIR GAP FITTING	DRAIN TO GALLERY SUMP VIA AIR GAP TO 3" FUD-03	100	10	FLANGE	FLANGE	OS & Y	310 CMR 22.22 - SEE 22.22(8)(a)	1, 2
BFP-02	3	REDUCED PRESSURE ZONE	ADMIN BUILDING (1000) LAB WATER AND TREATMENT BUILDING (2000) SODIUM HYDROXIDE FEED WATER X2	WATTS	LF009M2	P3-0717-660	1-1/2	AIR GAP FITTING	DRAIN TO GALLERY SUMP VIA AIR GAP TO 3" FUD-01	25	14	NPT	NPT	BALL	310 CMR 22.22 - SEE 22.22(8)(a)	1, 2
BFP-03	2	REDUCED PRESSURE ZONE	TREATMENT BUILDING (2000) COAGULANT POLYMER WATER	WATTS	LF009M2	P3-0717-660	1-1/4	AIR GAP FITTING	DRAIN TO GALLERY SUMP VIA AIR GAP TO 3" FUD-01	20	12	NPT	NPT	BALL	310 CMR 22.22 - SEE 22.22(8)(a)	1, 2
BFP-04	4	REDUCED PRESSURE ZONE	TREATMENT BUILDING (2000) FINISHED WATER DOSING SYSTEMS - SEE PLANS FOR LOCATIONS	WATTS	LF009M2	P3-0717-660	1	AIR GAP FITTING	DRAIN TO STORM SYSTEM VIA FUD-02	15	12	NPT	NPT	BALL	310 CMR 22.22 - SEE 22.22(8)(a)	1, 2
BFP-05	2	REDUCED PRESSURE ZONE	TREATMENT BUILDING (2000) FILTER AID POLYMER SYSTEMS 1 AND 2 FEED WATER	WATTS	LF009M2	P3-0717-660	1	AIR GAP FITTING	DRAIN TO GALLERY SUMP VIA AIR GAP TO 3" FUD-01	10	12	NPT	NPT	BALL	310 CMR 22.22 - SEE 22.22(8)(a)	1, 2
BFP-06	2	REDUCED PRESSURE ZONE	TREATMENT BUILDING (2000) RAW WATER DOSING SYSTEMS - SEE PLANS FOR LOCATIONS	WATTS	LF009M2	P3-0717-660	1	AIR GAP FITTING	DRAIN TO GALLERY SUMP VIA AIR GAP TO 3" FUD-01	10	12	NPT	NPT	BALL	310 CMR 22.22 - SEE 22.22(8)(a)	1, 2
BFP-07	2	DOUBLE CHECK VALVE	DEWATERING BUILDING (3000) CENTRIFUGE WATER AND POLYMER DEWATERING SKID WATER	WATTS	LF007	P3-0217-395	2	-	-	75	6	NPT	NPT	BALL	310 CMR 22.22 - SEE 22.22(8)(a)	1, 2
BFP-08	1	DOUBLE CHECK DETECTOR	TREATMENT BUILDING (2000) SPRINKLER SERVICE	WATTS	774DCDA	P3-0515-421	6	-	-	700	5	FLANGE	GROOVE	OS & Y	310 CMR 22.22 - SEE 22.22(9)(d)	1-3
BFP-09	1	DOUBLE CHECK DETECTOR	DEWATERING BUILDING (3000) SPRINKLER SERVICE	WATTS	774DCDA	P3-0515-421	6	-	-	320	5	FLANGE	GROOVE	OS & Y	310 CMR 22.22 - SEE 22.22(9)(d)	1-3
BFP-10	1	REDUCED PRESSURE ZONE	DEWATERING BUILDING (3000) CENTRIFUGE WATER AND POLYMER DEWATERING SKID WATER	WATTS	LF009M2	P3-0717-660	2	AIR GAP FITTING	DRAIN TO TRENCH DRAIN VIA 3" FUD	35	13	NPT	NPT	BAL	310 CMR 22.22 - SEE 22.22(8)(a)	1, 2

1

NOTES
1. SEE SPECIFICATION 22 11 19 FOR INSTALLATION AND ACCESSORY REQUIREMENTS.
2. ASSEMBLY SHALL CONFORM TO NSF 61 AND 372 REQUIREMENTS (LEAD FREE).
3. ASSEMBLY SHALL BE UL LISTED AND FM APPROVED FOR FIRE SPRINKLER SERVICE.

PLUMBING EQUIPMENT AND ACCESSORY SCHEDULE

TAG	FIXTURE	QUANTITY	MAKE	MODEL	MA APPROVAL NUMBER	CW (IN)	HW (IN)	TW (IN)	WASTE (IN)	VENT (IN)	ACCESSORIES	NOTES
		1										
DSN-01	4" DOWNSPOUT NOZZLE	3	ZURN	Z199	P3-1217-186	-	-	-	4	-	-	4
DSN-02	6" DOWNSPOUT NOZZLE	2	ZURN	Z199	P3-1217-186	-	-	-	6	-	-	4
DSN-03	8" DOWNSPOUT NOZZLE	3	ZURN	Z199	P3-1217-186	-	-	-	8	-	-	4
DSN-04	10" DOWNSPOUT NOZZLE	4	ZURN	Z199	P3-1217-186	-	-	-	10	-	-	4
DSN-05	12" DOWNSPOUT NOZZLE	1	ZURN	Z199	P3-1217-186	-	-	-	12	-	-	4
ES-01	FREEZEPROOF EMERGENCY SHOWER	2	GUARDIAN	GFR1205	P3-0717-689	-	-	1	-	-	FLOW SWITCH	5, 7
ESE-01	EMERGENCY EYEWASH SHOWER	15	GUARDIAN	G1996	P3-0720-476	-	-	1-1/4	-	-	FLOW SWITCH, DRENCH HOSE	5, 7
ET-01	EXPANSION TANK	9	AMTROL	ST-12	P3-0818-526	3/4	-	-	-	-	-	2
EW-01	FREEZEPROOF EMERGENCY EYEWASH	2	GUARDIAN	GFR1814	P3-0717-689	-	-	1/2	-	-	FLOW SWITCH	5, 7
EW-02	EMERGENCY EYEWASH	2	GUARDIAN	G1899	P1-0720-476	-	-	1/2	-	-	FLOW SWITCH	5, 7
FCO-01	3" HEAVY DUTY FLOOR CLEANOUT	9	ZURN	Z1400-AR-K(C)	P3-1217-186	-	-	-	3	-	-	3
FCO-02	4" HEAVY DUTY FLOOR CLEANOUT	47	ZURN	Z1400-AR-K(C)	P3-1217-186	-	-	-	4	-	-	3
FCO-03	6" HEAVY DUTY FLOOR CLEANOUT	6	ZURN	Z1400-AR-K(C)	P3-1217-186	-	-	-	6	-	-	3
FCO-04	8" HEAVY DUTY FLOOR CLEANOUT	2	ZURN	Z1400-AR-K(C)	P3-1217-186	-	-	-	8	-	-	3
FCO-05	4" EXTRA HEAVY DUTY FLOOR CLEANOUT	3	ZURN	Z1400-AR	P3-1217-186	-	-	-	4	-	-	3
FD-01	12" SQUARE HEAVY DUTY FLOOR DRAIN	47	ZURN	Z610-AR	P3-1217-186	-	-	-	4	-	TRAP PRIMER CONNECTION ADAPTER	3
FD-02	6" ROUND FLOOR DRAIN	12	ZURN	Z415B	P3-1217-186	-	-	-	4	-	TRAP PRIMER CONNECTION ADAPTER	3
FD-03	6" ROUND CHEMICAL RESISTANT FLOOR DRAIN	1	ORION	FD-1	P3-1217-289	-	-	-	4	-	TRAP PRIMER CONNECTION ADAPTER	3
FD-04	12" SQUARE EXTRA HEAVY DUTY FLOOR DRAIN	3	WATTS	FD-460-E	P3-0217-395	-	-	-	4	-	TRAP PRIMER CONNECTION ADAPTER	3
FUD-01	FUNNEL DRAIN	1	ZURN	Z326-AR-DB	P3-1217-186	-	-	-	6	-	-	3, 8
FUD-02	FUNNEL DRAIN	15	ZURN	Z326-AR-DB	P3-1217-186	-	-	-	3	-	-	3, 8
FUD-03	FUNNEL DRAIN	9	ZURN	Z326-AR-DB	P3-1217-186	-	-	-	4	-	-	3, 8
HB-01	HOSEBIB	31	ZURN	Z1341XL	P1-0815-18	3/4	-	-	-	-	-	2
HR-01	HOSERACK	21	LEONARD	HDHR	N/A	-	-	-	-	-	-	2
LWF-01	LAB WATER FAUCET	9	CHICAGO	50-E35	P1-1118-378	1/2	1/2	-	-	-	-	2
NFHB-01	NO FREEZE HOSEBIB	10	ZURN	Z1345	P3-1217-224	3/4	-	-	-	-	-	2
NT-01	NEUTRALIZATION TANK	5	WATTS	T6	P3-1217-289	-	-	-	2	2	-	3
OWS-01	OIL WATER SEPARATOR	1	ZURN	Z1186-ST	P3-1217-186	-	-	-	3	1-1/2	FLOW CONTROL ORIFICE	3
PRV-01	PRESSURE REDUCING VALVE	2	WATTS	LFN223B	P3-0217-395	3	-	-	-	-	STRAINER	2
PWF-01	LAB PURE WATER FAUCET	5	WATTS	GNF	NA	1/2	-	-	-	-	-	2
RD-01	ROOF DRAIN	42	ZURN	Z163-DR	P3-1217-186	-	-	-	4	-	-	5
RH-01	NON-FREEZE ROOF HYDRANT	4	ZURN	Z1388XL	P3-0818-523	3/4	-	-	-	-	-	2
ST-01	FIRE SPRINKLER SUPPLY STRAINER	2	NEPTUNE	BASKET STRAINER	P3-1016-169	6	-	-	-	-	-	2
T-01	SURGE TANK	1	AMTROL	WX-448C	P3-0818-526	2	-	-	-	-	-	2
T-02	HOT WATER STORAGE TANK	1	A.O. SMITH	TJV-140A	C3-1217-163	-	3/4	-	-	-	-	2
TMV-01	THERMOSTATIC MIXING VALVE - SAFETY SHOWER	17	GUARDIAN	G6040	P-2023-051	1	1	1-1/4	-	-	-	5
TMV-02	THERMOSTATIC MIXING VALVE - EYEWASH	2	GUARDIAN	G6020	P-2023-051	1/2	1/2	1/2	-	-	-	5
TMV-03	THERMOSTATIC MIXING VALVE - DEWATERING POLYMER	1	LEONARD	TM-200-SW-AT-LF	P3-0417-491	2	2	2	-	-		2
TMV-04	THERMOSTATIC MIXING VALVE - COAG. POLYMER	2	LEONARD	T-80-AT-LF	P3-0417-491	1	1	1-1/4	-	-	-	2
TMV-05	THERMOSTATIC MIXING VALVE - F.A. POLYMER	1	LEONARD	T-50-AT-LFM	P3-0417-491	3/4	3/4	1	-	-	-	2
TP-01	AUTOMATIC SINGLE OUTLET TRAP PRIMER	5	JAY R. SMITH	S273B	P1-0220-241	1/2	-	-	-	-	-	2
TP-02	AUTOMATIC 5-OUTLET TRAP PRIMER	4	ZURN	Z1020-XL	P3-0818-523	1/2	-	-	-	-	-	2, 7
TP-03	PRESSURE ACTUATED SINGLE OUTLET TRAP PRIMER	1	ZURN	Z1022-XL	P3-1217-186	1/2	-	-	-	-	-	2
VB-01	VACUUM BREAKER	11	ZURN	720A	P3-1217-200	1-1/2	-	-	-	-	-	2
WHA-01	WATER HAMMER ARRESTER	39	WATTS	LF15M2	P1-1014-111	3/4	-	-	-	-	-	2
WHA-03	HEAVY DUTY FLOOR CLEANTOUT	1	ZURN	Z1400-K	P3-1217-186	-	-	-	4	-	-	3
WM-01	WATER METER	1	METRON FARNIER	SPECTRUM 500D	P1-0220-277	4	-	-	-	-	-	1
WM-02	WATER METER	1	METRON FARNIER	SPECTRUM 500D	P1-0220-277	4	-	-	-	-	-	1
WM-03	WATER METER	1	METRON FARNIER	SPECTRUM 130D	P1-0220-227	2	-	-	-	-	-	1

1

2

NOTES
1. SEE SPECIFICATION 22 05 19 FOR CONSTRUCTION AND ACCESSORY DETAILS.
2. SEE SPECIFICATION 22 11 19 FOR CONSTRUCTION AND ACCESSORY DETAILS.
3. SEE SPECIFICATION 22 13 19 FOR CONSTRUCTION AND ACCESSORY DETAILS.
4. SEE SPECIFICATION 22 14 13 FOR CONSTRUCTION AND ACCESSORY DETAILS.
5. SEE SPECIFICATION 22 45 00 FOR CONSTRUCTION AND ACCESSORY DETAILS.
6. DOMESTIC WATER SURGE TANK SHALL HAVE AN ACCEPTANCE CAPACITY OF NO LESS THAN 80 GALLONS.
7. PROVIDE 120VAC POWER CIRCUIT
8. PROVIDE APPROVED VERTICAL BALL-FLOAT BACKWATER VALVE, ZURN Z1099 OR EQUIVALENT.

1

PLUMBING FIXTURE SCHEDULE

TAG	FIXTURE	QUANTITY	MAKE	MODEL	MA APPROVAL NUMBER	CW (IN)	HW (IN)	TW (IN)	WASTE (IN)	VENT (IN)	ACCESSORIES	NOTES
DF-01	RECESSED DRINKING FOUNTAIN/BOTTLE FILLUP	1	ELKAY	EZWS-ERPBM28K	P1-0416-426	3/8			3 x 1-1/4		STAINLESS STEEL APRON	1
DF-02	SURFACE DRINKING FOUNTAIN/BOTTLE FILLUP	1	ELKAY	LZSTLG8WSLK	P1-0721-440	3/8	-	-	1-1/4	-	-	1
DF-03	SURFACE BOTTLE FILLUP	7	ELKAY	LZWSSM	P3-0417-549	3/8	-	-	1-1/4	-	-	1
DF-04	RECESSED BOTTLE FILLUP	1	ELKAY	LBWDC00	P1-0719-581	3/8	-	-	1-1/4	-	-	1
KF-01	KITCHEN FAUCET	2	KOHLER	CRUE	P1-0920-45A	3/8	3/8	-	-	-	-	1
LAV-01	WALL-MOUNTED LAVATORY	3	AMERICAN STANDARD	MURRO	P3-0716-618	3/8	3/8	-	1-1/4	-	LF-01, WALL CARRIER	1
LAV-02	UNDER-MOUNTED LAVATORY	7	AMERICAN STANDARD	OVALYN	P1-1221-158	3/8	3/8	-	1-1/4	-	LF-01	1
LF-01	LAVATORY FAUCET	16	KOHLER	COMPOSED	P3-0818-720	3/8	3/8	-	-	-	-	1
SH-01	SHOWER	3	STERN WILLIAMS	MODEL 54 TERRAZO 36x36 SHOWER PAN	P3-0717-647	1/2	1/2	-	2	-	FAUCET SYSTEM	1
SH-02	ADA SHOWER	1	STERN WILLIAMS	WDA-3410 TERRAZO 60x30 ADA SHOWER PAN	P3-0717-647	1/2	1/2	-	2	-	FAUCET SYSTEM, RAMP	1
SK-01	ADA KITCHEN SINK	2	ELKAY	CROSSTOWN - 25X22X6	P1-0719-581	1/2	1/2	-	3-1/2	-	KF-01	1
SK-02	DOUBLE BASIN SERVICE SINK	2	ELKAY	SS82302	P1-0719-581	1/2	1/2	-	2x3-1/2	-	SSF-01	1
SK-03	MOP BASIN	4	AMERICAN STANDARD	FLORWELL 7741	P3-0118-300	1/2	1/2	-	3	-	SSF-01	1
SSF-01	SERVICE SINK FAUCET	6	CHICAGO	835	P1-0118-259	1/2	1/2	-	-	-	-	1
UR-01	URINAL	3	AMERICAN STANDARD	DECORUM	P1-0316-406	3/4	-	-	2	-	BATTERY FLUSH VALVE, WALL CARRIER	1
WC-01	WATER CLOSET	12	AMERICAN STANDARD	AFWALL MILLENIUM FLOWISE	P1-0218-300	1	-	-	2-1/8	-	BATTERY FLUSH VALVE, WALL CARRIER	1

NOTES
1. SEE SPECIFICATION 22 40 00 FOR CONSTRUCTION AND ACCESSORY DETAILS.

REV	ISSUED FOR	DATE	BY
2	ADDENDUM NO. 5	APR 24	MWM
1	ADDENDUM NO. 2	MAR 24	MWM
0	ISSUED FOR BIDS	FEB 24	MWM

PROJECT ENGINEER:	K. BARRETT
DESIGNED BY:	D. WITTE
DRAWN BY:	D. WITTE
CHECKED BY:	S. BARRESE

IF THIS BAR DOES NOT MEASURE 1" THEN DRAWING IS NOT TO FULL SCALE — 0 1/2" 1"

COMMONWEALTH OF MASSACHUSETTS — DAVID WITTE No. 58104 — PROFESSIONAL ENGINEER

Hazen
HAZEN AND SAWYER
100 GREAT MEADOW ROAD, SUITE 702
WETHERSFIELD, CT 06109

SPRINGFIELD WATER AND SEWER COMMISSION

WEST PARISH WATER TREATMENT PLANT

FILED SUB-BID

PLUMBING SCHEDULES SHEET 2

DATE:	FEBRUARY 2024
HAZEN NO.:	90398-004
CONTRACT NO.:	24-51
DRAWING NUMBER:	P-003

Autodesk Docs://90398-004_West Parish Filter WTF/90398-004 GENL-P.rvt
4/18/2024 1:22:46 PM

NOTES:

1. SEE ARCHITECTURAL DRAWINGS FOR FIXTURE LOCATIONS AND MOUNTING HEIGHTS.

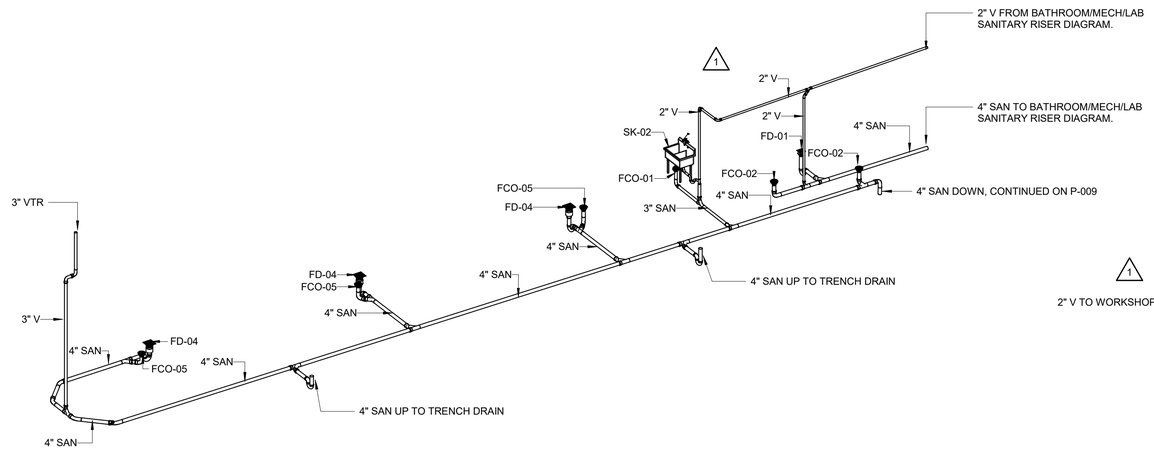

WORKSHOP SANITARY RISER DIAGRAM EL 471.00

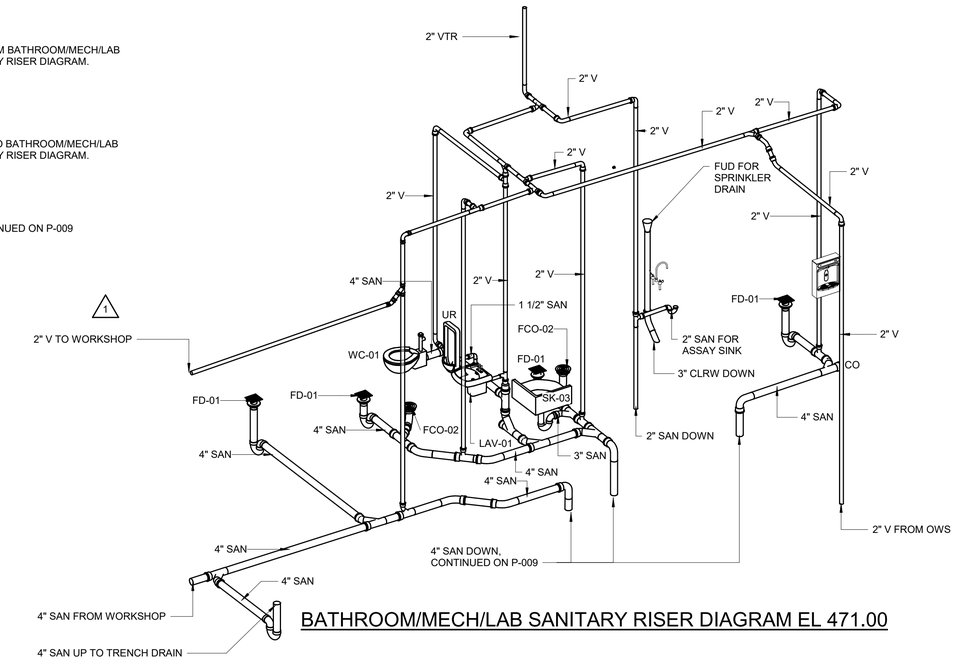

BATHROOM/MECH/LAB SANITARY RISER DIAGRAM EL 471.00

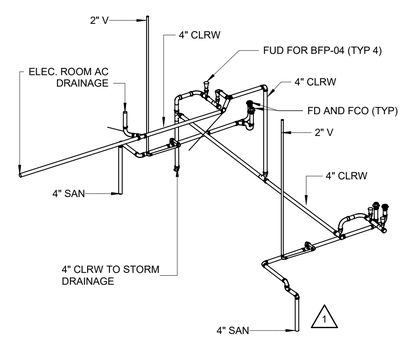

FILTERED WATER ROOM SANITARY RISER DIAGRAM EL 471.00

REV	ISSUED FOR	DATE	BY
2	ADDENDUM NO. 5	APR 24	MWM
1	ADDENDUM NO. 2	MAR 24	MWM
0	ISSUED FOR BIDS	FEB 24	MWM

PROJECT ENGINEER:	K. BARRETT
DESIGNED BY:	D. WITTE
DRAWN BY:	M. CONWAY
CHECKED BY:	S. BARRESE
IF THIS BAR DOES NOT MEASURE 1" THEN DRAWING IS NOT TO FULL SCALE	0 1/2" 1"

COMMONWEALTH OF MASSACHUSETTS
DAVID WITTE
No. 58104
PROFESSIONAL ENGINEER

Hazen

HAZEN AND SAWYER
100 GREAT MEADOW ROAD, SUITE 702
WETHERSFIELD, CT 06109

SPRINGFIELD WATER AND SEWER COMMISSION

WEST PARISH WATER TREATMENT PLANT

FILED SUB-BID

WATER TREATMENT BUILDING
PLUMBING
SANITARY RISER DIAGRAMS AT EL 471.00 - PROCESS AREA

DATE:	FEBRUARY 2024
HAZEN NO.:	90398-004
CONTRACT NO.:	24-51
DRAWING NUMBER:	P-012

Autodesk Docs://90398-004_West Parish Filter WTF/90398-004-TB-P.rvt
4/23/2024 10:54:55 AM

NOTES:
1. SEE ARCHITECTURAL DRAWINGS FOR FIXTURE LOCATIONS AND MOUNTING HEIGHTS.

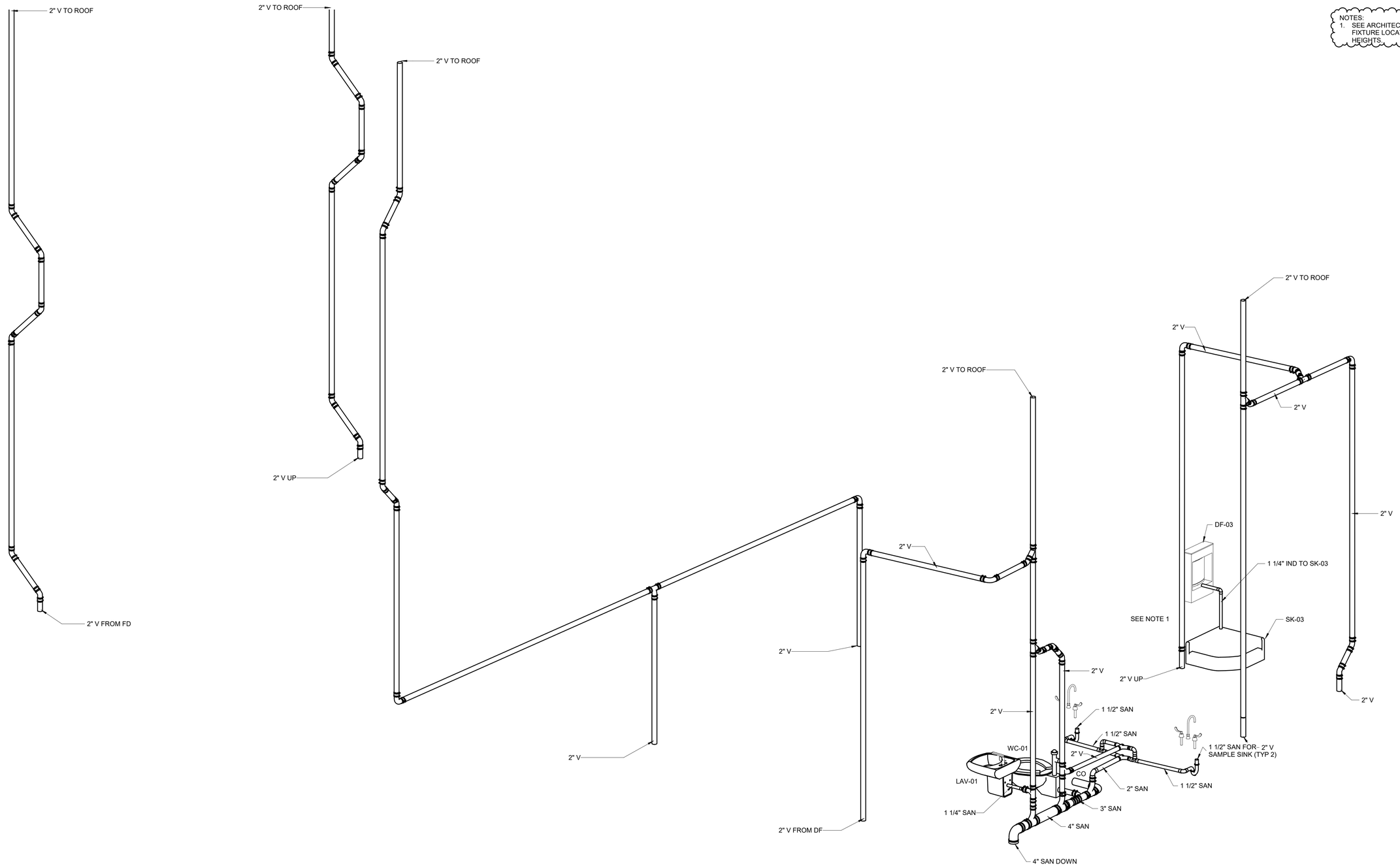

SANITARY RISER DIAGRAM AT EL 484.50

REV	ISSUED FOR	DATE	BY
1	ADDENDUM NO. 5	APR 24	MWM
0	ISSUED FOR BIDS	FEB 24	MWM

PROJECT ENGINEER:	K. BARRETT
DESIGNED BY:	D. WITTE
DRAWN BY:	D. KVOPKA
CHECKED BY:	S. BARRESE

IF THIS BAR DOES NOT MEASURE 1" THEN DRAWING IS NOT TO FULL SCALE 0 1/2" 1"

COMMONWEALTH OF MASSACHUSETTS
DAVID WITTE
No. 58104
PROFESSIONAL ENGINEER

Hazen

HAZEN AND SAWYER
100 GREAT MEADOW ROAD, SUITE 702
WETHERSFIELD, CT 06109

SPRINGFIELD WATER AND SEWER COMMISSION

WEST PARISH WATER TREATMENT PLANT

FILED SUB-BID

DEWATERING BUILDING
PLUMBING
SANITARY RISER DIAGRAMS AT EL 484.50

DATE:	FEBRUARY 2024
HAZEN NO.:	90398-004
CONTRACT NO.:	24-51
DRAWING NUMBER:	P-017

Autodesk Docs://90398-004_West Parish Filter WTF/90398-004-DWB-P.rvt
4/23/2024 12:08:32 PM

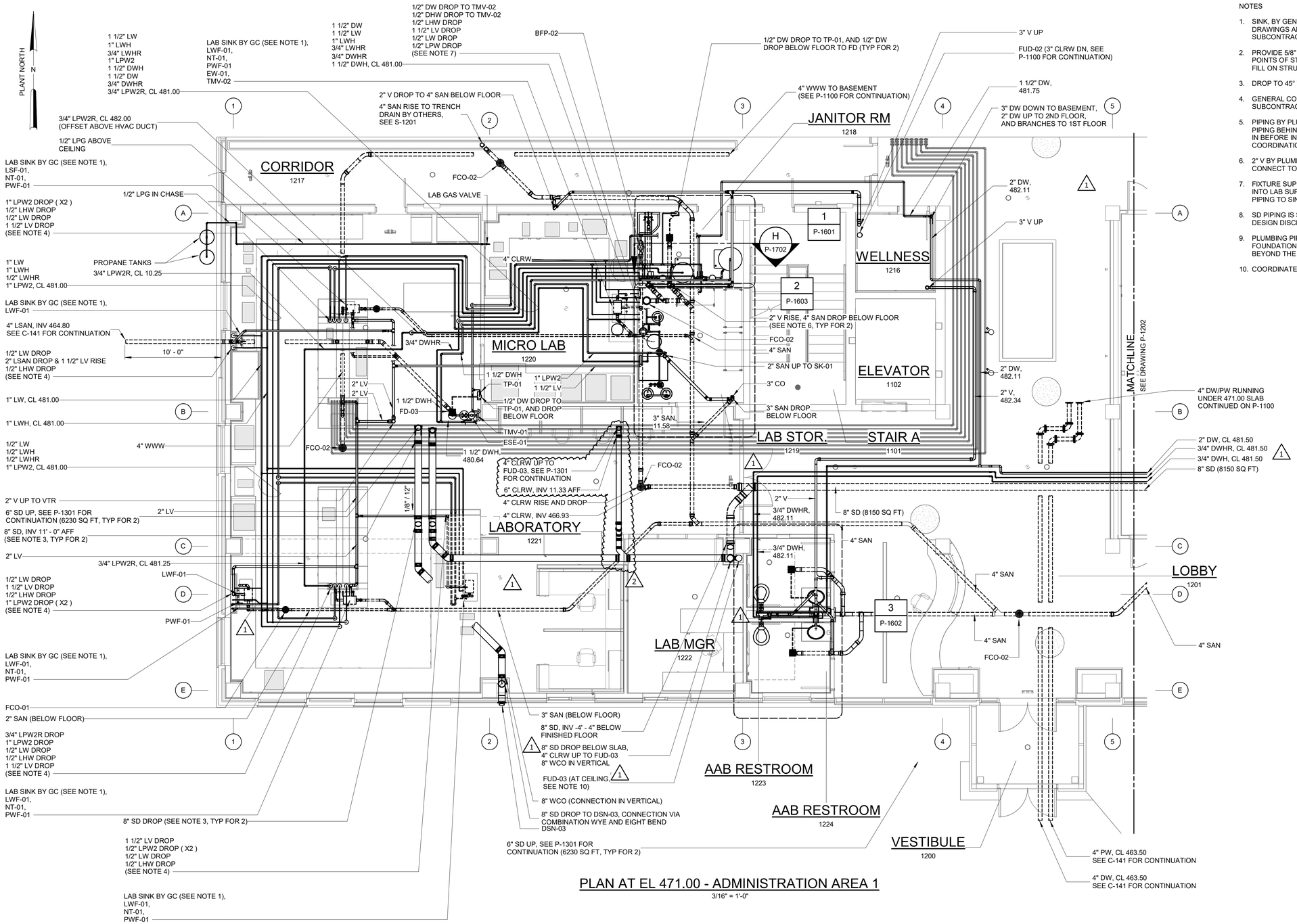

PLAN AT EL 471.00 - ADMINISTRATION AREA 1

3/16" = 1'-0"

NOTES

1. SINK, BY GENERAL CONTRACTOR, INTEGRAL TO CASEWORK, REFER TO ARCHITECTURAL DRAWINGS AND SPECIFICATIONS. FAUCET, FIXTURE TRAP AND CONNECTING PIPING BY PLUMBING SUBCONTRACTOR.
2. PROVIDE 5/8" THICK 316SS WELDED-WIRE GRATING TO FUNCTION AS DRAIN COVER AT LOW POINTS OF STRUCTURAL TRENCHES. COORDINATE DIMENSIONS WITH LOW POINTS OF CONCRETE FILL ON STRUCTURAL DRAWINGS.
3. DROP TO 45° VERTICAL OFFSET BELOW STRUCTURAL BEAM, BOTTOM OF BEAM = 11' - 4 " AFF
4. GENERAL CONTRACTOR SHALL COORDINATE INSTALLATION OF SAMPLE PIPING WITH PLUMBING SUBCONTRACTOR TO ENSURE SUFFICIENT CLEARANCE FOR THE 8" SD PIPING.
5. PIPING BY PLUMBING SUBCONTRACTOR SHALL DROP INTO SHAFT AND CASEWORK BY GC. ROUTE PIPING BEHIND CASEWORK ABOVE FINISHED FLOOR. FIXTURE SUPPLY PIPING SHALL BE ROUGHED IN BEFORE INSTALLATION OF CABINETRY. GENERAL CONTRACTOR IS REPSONSIBLE FOR COORDINATION OF INSTALLATION.
6. 2" V BY PLUMBING SUBCONTRACTOR SHALL RISE INTO CMU WALL BY GENERAL CONTRACTOR TO CONNECT TO HORIZONTAL BRANCH VENT VENT IN DROP CEILING.
7. FIXTURE SUPPLY PIPING SHOWN IN LAB FOR CLARITY. ROUTE PIPING FROM MECHANICAL ROOM INTO LAB SUPPLY ROOM, AND PENETRATE THE WALL BEHIND THE CASEWORK TO CONNECT PIPING TO SINK.
8. SD PIPING IS SIZED FOR SIMULTANEOUS STORM FLOW AND CATASTROPHIC RPZ DISCHARGE. DESIGN DISCHARGE OF 80 GPM IS EQUIVALENT TO 1920 SQ FT OF DRAINAGE AREA.
9. PLUMBING PIPING BENEATH THE BUILDING AND TO AN EXTENT OF 10FT FROM THE BUILDING FOUNDATION IS WITHIN THE SCOPE OF THE PLUMBING SUBCONTRACTOR. CONTINUATION BEYOND THE 10FT BOUNDARY IS WITHIN THE SCOPE OF THE GENERAL CONTRACTOR.
10. COORDINATE WITH HVAC INSTALLER FOR LOCATION OF FUNNEL DRAIN. PROVIDE ACCESS PANEL.

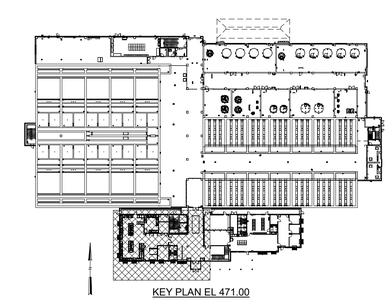

KEY PLAN EL 471.00

3/16" = 1'-0"

REV	ISSUED FOR	DATE	BY
2	ADDENDUM NO. 5	APR 24	MWM
1	ADDENDUM NO. 2	MAR 24	MWM
0	ISSUED FOR BIDS	FEB 24	MWM

PROJECT ENGINEER:	K. BARRETT
DESIGNED BY:	D. WITTE
DRAWN BY:	M. CONWAY
CHECKED BY:	S. BARRESE

IF THIS BAR DOES NOT MEASURE 1" THEN DRAWING IS NOT TO FULL SCALE 0 1/2" 1"

COMMONWEALTH OF MASSACHUSETTS
DAVID WITTE
No. 58104
PROFESSIONAL ENGINEER

Hazen

HAZEN AND SAWYER
100 GREAT MEADOW ROAD, SUITE 702
WETHERSFIELD, CT 06109

SPRINGFIELD WATER AND SEWER COMMISSION

WEST PARISH WATER TREATMENT PLANT

FILED SUB-BID

WATER TREATMENT BUILDING
PLUMBING
PLAN AT EL 471.00 - ADMINISTRATION AREA 1

DATE:	FEBRUARY 2024
HAZEN NO.:	90398-004
CONTRACT NO.:	24-51
DRAWING NUMBER:	P-1201

Autodesk Docs://90398-004_West Parish Filter WTF/90398-004-ADM-P.rvt
4/18/2024 1:25:05 PM

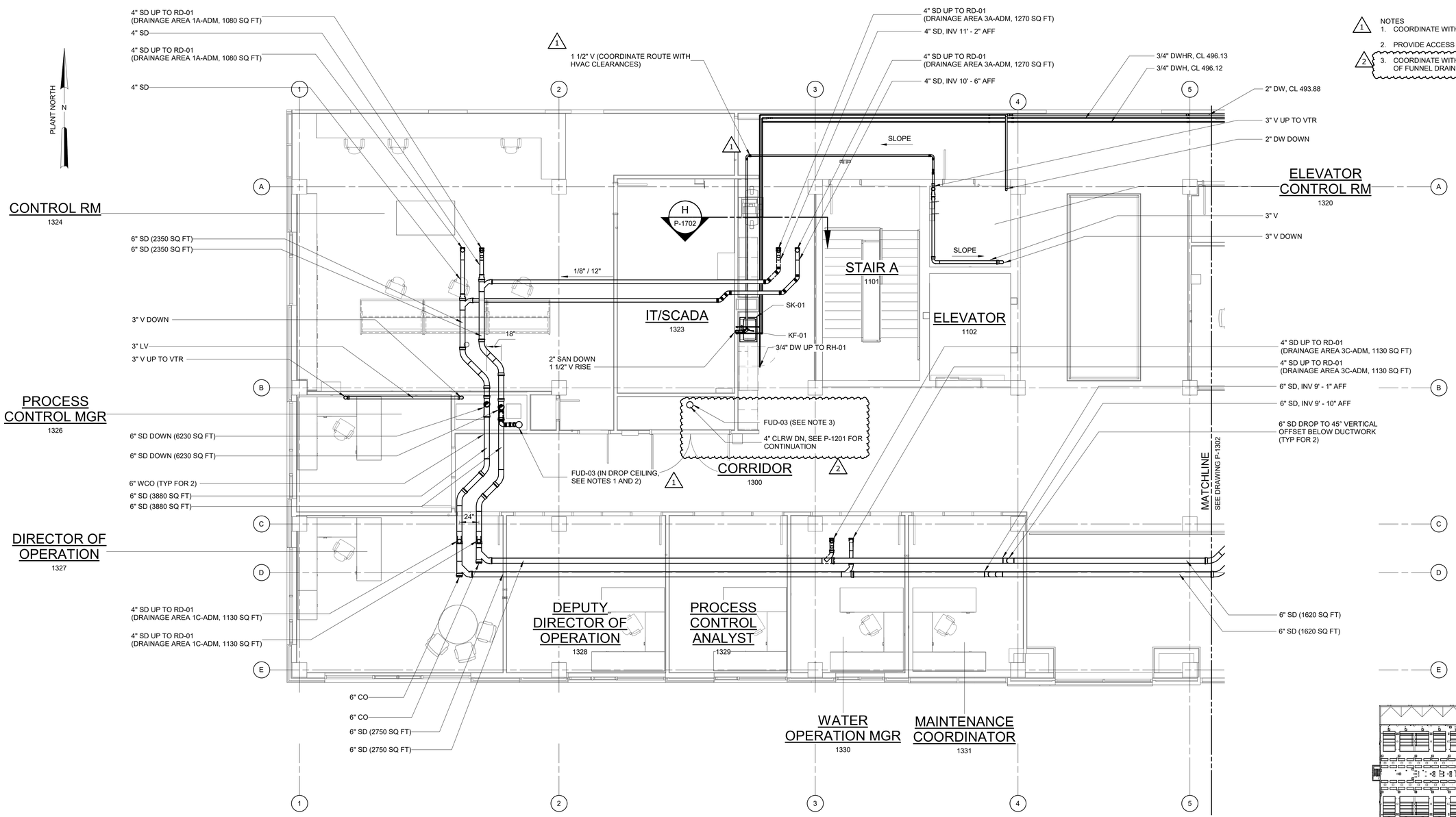

NOTES
1. COORDINATE WITH HVAC INSTALLER FOR LOCATION OF FUNNEL DRAIN.
2. PROVIDE ACCESS PANEL.
3. COORDINATE WITH FIRE PROTECTION SUBCONTRACTOR FOR LOCATION OF FUNNEL DRAIN SERVING PREACTION SYSTEM MAIN DRAIN

PLAN AT EL 485.00 - ADMINISTRATION AREA 1

3/16" = 1'-0"

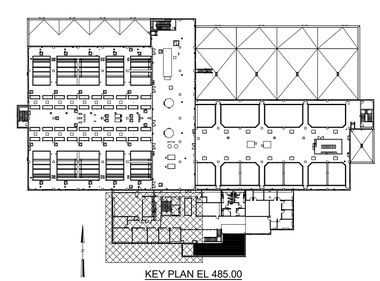

KEY PLAN EL 485.00

3/16" = 1'-0" 6 4 2 0 5'

REV	ISSUED FOR	DATE	BY
2	ADDENDUM NO. 5	APR 24	MWM
1	ADDENDUM NO. 2	MAR 24	MWM
0	ISSUED FOR BIDS	FEB 24	MWM

PROJECT ENGINEER:	K. BARRETT
DESIGNED BY:	D. WITTE
DRAWN BY:	M. CONWAY
CHECKED BY:	S. BARRESE
IF THIS BAR DOES NOT MEASURE 1" THEN DRAWING IS NOT TO FULL SCALE	0 1/2" 1"

COMMONWEALTH OF MASSACHUSETTS
DAVID WITTE
No. 58104
PROFESSIONAL ENGINEER

Hazen

HAZEN AND SAWYER
100 GREAT MEADOW ROAD, SUITE 702
WETHERSFIELD, CT 06109

SPRINGFIELD WATER AND SEWER COMMISSION

WEST PARISH WATER TREATMENT PLANT

FILED SUB-BID

WATER TREATMENT BUILDING
PLUMBING
PLAN AT EL 485.00 - ADMINISTRATION AREA 1

DATE:	FEBRUARY 2024
HAZEN NO.:	90398-004
CONTRACT NO.:	24-51
DRAWING NUMBER:	P-1301

Autodesk Docs://90398-004_West Parish Filter WTF/90398-004-ADM-P.rvt
4/18/2024 1:25:16 PM

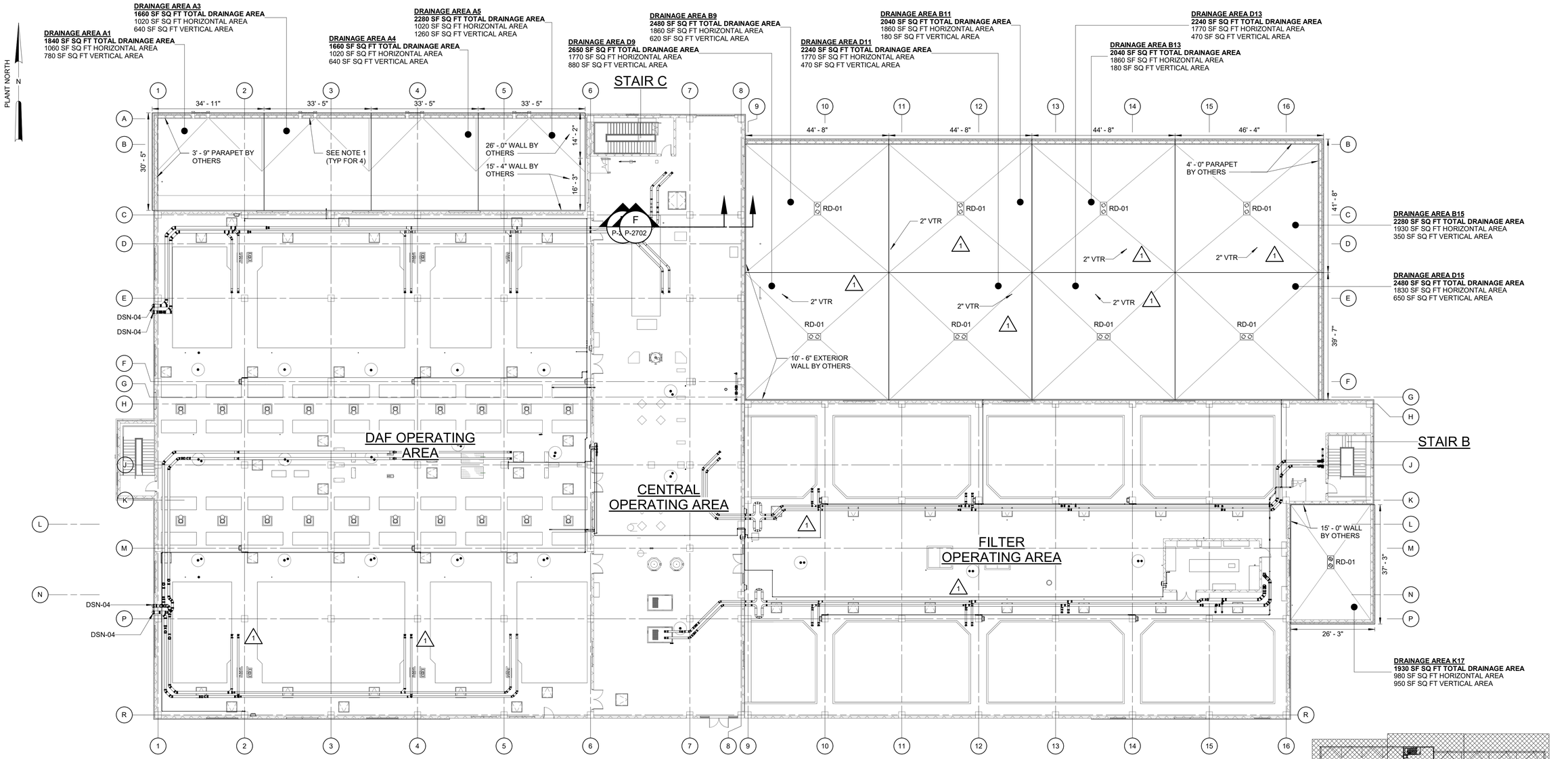

NOTES

1. PARAPET SCUPPERS AND DOWNSPOUTS PROVIDED BY OTHERS. SEE ARCHITECTURAL SHEETS.

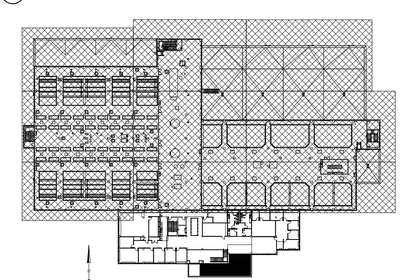

KEY PLAN EL 485.00

1/16" = 1'-0"

REV	ISSUED FOR	DATE	BY
2	ADDENDUM NO. 5	APR 24	MWM
1	ADDENDUM NO. 2	MAR 24	MWM
0	ISSUED FOR BIDS	FEB 24	MWM

PROJECT ENGINEER:	K. BARRETT
DESIGNED BY:	D. WITTE
DRAWN BY:	M. CONWAY
CHECKED BY:	S. BARRESE

IF THIS BAR DOES NOT MEASURE 1" THEN DRAWING IS NOT TO FULL SCALE (0 1/2" 1")

COMMONWEALTH OF MASSACHUSETTS — DAVID WITTE No. 58104 — PROFESSIONAL ENGINEER

Hazen

HAZEN AND SAWYER
100 GREAT MEADOW ROAD, SUITE 702
WETHERSFIELD, CT 06109

SPRINGFIELD WATER AND SEWER COMMISSION

WEST PARISH WATER TREATMENT PLANT

FILED SUB-BID

WATER TREATMENT BUILDING
PLUMBING
OVERALL PLAN AT EL 485.00 - PROCESS AREA

DATE:	FEBRUARY 2024
HAZEN NO.:	90398-004
CONTRACT NO.:	24-51
DRAWING NUMBER:	P-2300

Autodesk Docs://90398-004_West Parish Filter WTF/90398-004-TB-P.rvt
4/23/2024 10:08:21 AM

NOTES:

1. SCUPPER BOXES AND RECTANGULAR DOWNSPOUTS FOR SECONDARY DRAINAGE BY GENERAL OTHERS, LEADER SPILLS TO GRADE.
2. SCUPPER BOXES AND RECTANGULAR DOWNSPOUTS FOR PRIMARY DRAINAGE BY OTHERS.
3. GENERAL CONTRACTOR SHALL COORDINATE DOWNSPOUT NOZZLE PENETRATIONS WITH EXTERIOR ARCHITECTURAL PANEL SUPPORTS. INTERIOR SD PIPE INVERT ELEVATION SHALL NOT EXCEED 7' - 0" AFF. SEE ARCHITECTURAL DRAWINGS FOR DETAILS.

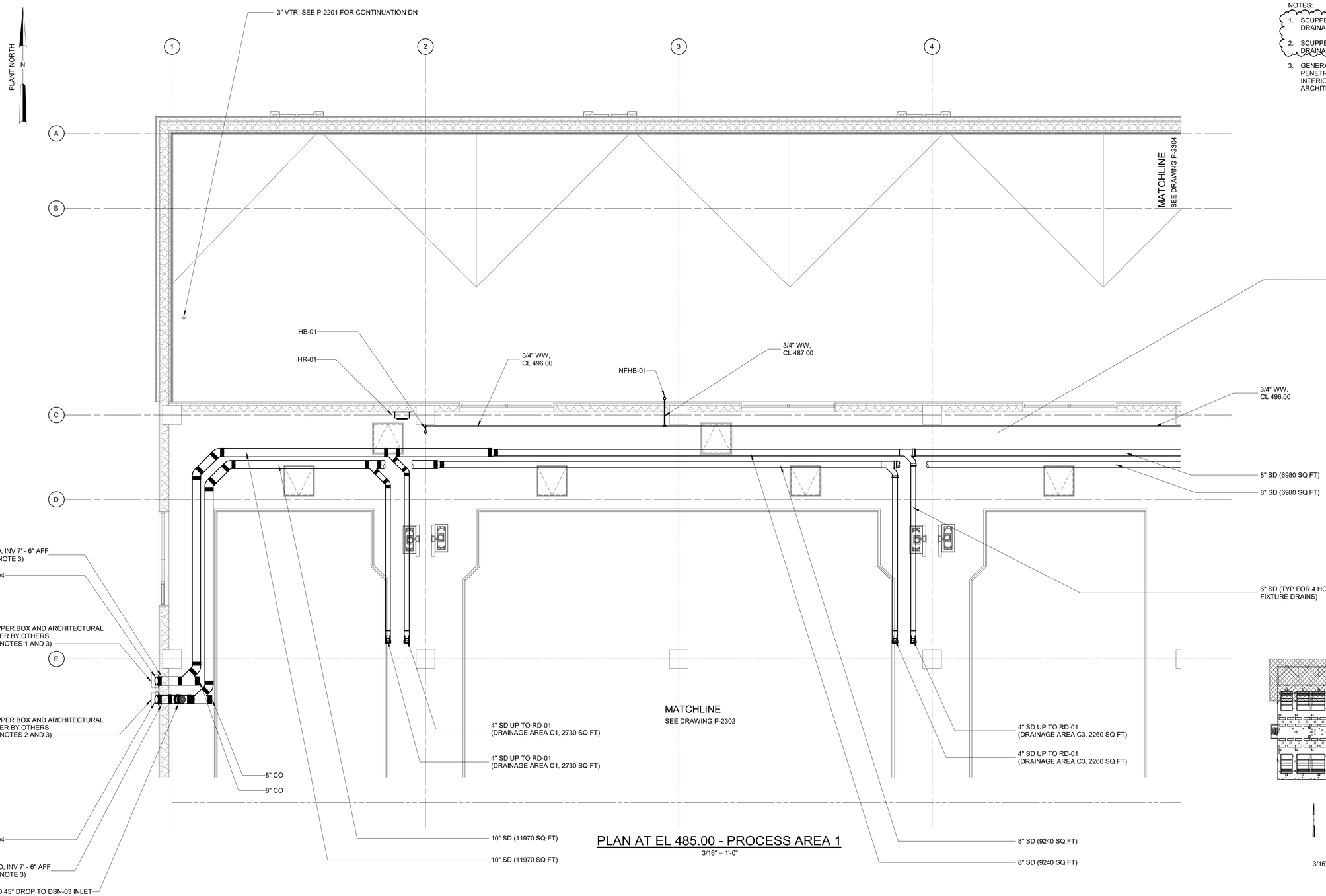

PLAN AT EL 485.00 - PROCESS AREA 1

3/16" = 1'-0"

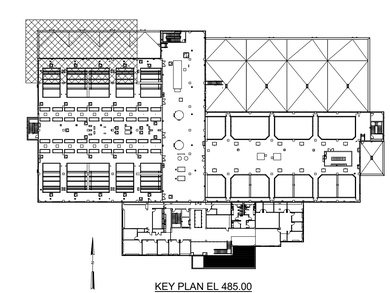

KEY PLAN EL 485.00

6 4 2 0 5'

3/16" = 1'-0"

REV	ISSUED FOR	DATE	BY
1	ADDENDUM NO. 5	APR 24	MWM
0	ISSUED FOR BIDS	FEB 24	MWM

PROJECT ENGINEER:	K. BARRETT
DESIGNED BY:	D. WITTE
DRAWN BY:	M. CONWAY
CHECKED BY:	S. BARRESE
IF THIS BAR DOES NOT MEASURE 1" THEN DRAWING IS NOT TO FULL SCALE	0 1/2" 1"

COMMONWEALTH OF MASSACHUSETTS
DAVID WITTE
No. 58104
PROFESSIONAL ENGINEER

Hazen

HAZEN AND SAWYER
100 GREAT MEADOW ROAD, SUITE 702
WETHERSFIELD, CT 06109

SPRINGFIELD WATER AND SEWER COMMISSION

WEST PARISH WATER TREATMENT PLANT

FILED SUB-BID

WATER TREATMENT BUILDING
PLUMBING
PLAN AT EL 485.00 - PROCESS AREA 1

DATE:	FEBRUARY 2024
HAZEN NO.:	90398-004
CONTRACT NO.:	24-51
DRAWING NUMBER:	P-2301

Autodesk Docs://90398-004_West Parish Filter WTF/90398-004-TB-P.rvt
4/23/2024 10:08:25 AM

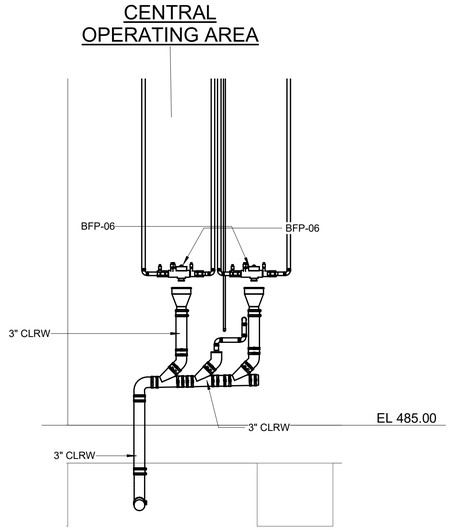

SECTION C
1/2" = 1'-0"
P-2305

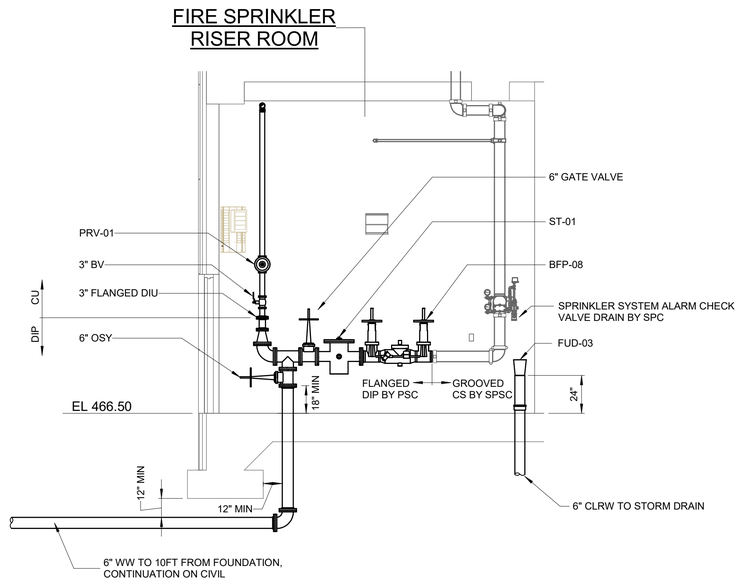

SECTION D
1/4" = 1'-0"
P-2208

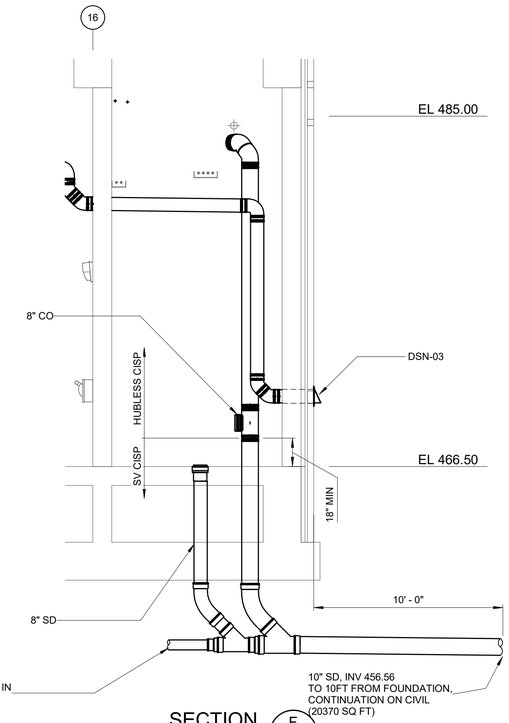

SECTION F
1/4" = 1'-0"
P-2207

NOTES

2

1. MAINTAIN 18" AFF TO THE VERTICAL STORM DRAIN TRANSITION FROM HUBLESS TO SERVICE WEIGHT CISP, AS WELL AS TO THE BOTTOM OF THE DSN OUTLET PIPE.
2. PLUMBING PIPING BENEATH THE BUILDING AND TO AN EXTENT OF 10FT FROM THE BUILDING FOUNDATION IS WITHIN THE SCOPE OF THE PLUMBING SUBCONTRACTOR. CONTINUATION BEYOND THE 10FT BOUNDARY IS WITHIN THE SCOPE OF THE GENERAL CONTRACTOR.

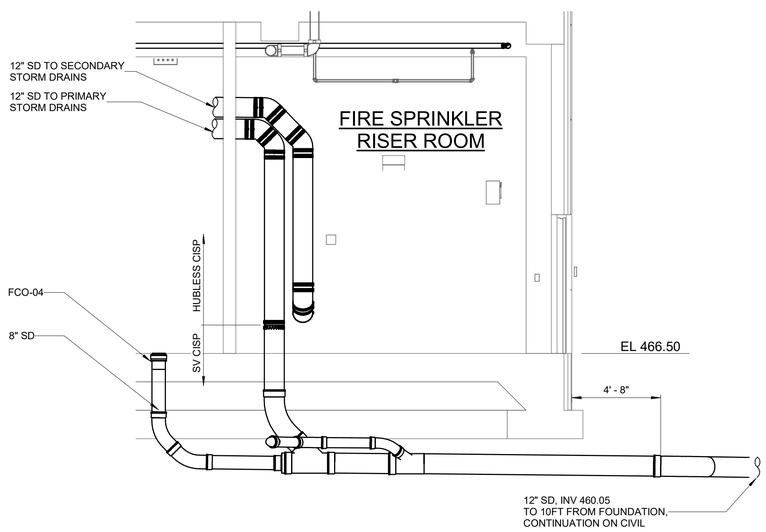

SECTION E
1/4" = 1'-0"
P-2200

1/4" = 1'-0" 1 0 1 2 3 7'

1/2" = 1'-0" 12" 0 1 3'

REV	ISSUED FOR	DATE	BY
2	ADDENDUM NO. 5	APR 24	MWM
1	ADDENDUM NO. 2	MAR 24	MWM
0	ISSUED FOR BIDS	FEB 24	MWM

PROJECT ENGINEER:	K. BARRETT
DESIGNED BY:	D. WITTE
DRAWN BY:	M. CONWAY
CHECKED BY:	S. BARRESE

IF THIS BAR DOES NOT MEASURE 1" THEN DRAWING IS NOT TO FULL SCALE 0 1/2" 1"

COMMONWEALTH OF MASSACHUSETTS
DAVID WITTE
No. 58104
PROFESSIONAL ENGINEER

Hazen

HAZEN AND SAWYER
100 GREAT MEADOW ROAD, SUITE 702
WETHERSFIELD, CT 06109

SPRINGFIELD WATER AND SEWER COMMISSION

WEST PARISH WATER TREATMENT PLANT

FILED SUB-BID

WATER TREATMENT BUILDING
PLUMBING
SECTIONS - PROCESS AREA SHEET 1

DATE:	FEBRUARY 2024
HAZEN NO.:	90398-004
CONTRACT NO.:	24-51
DRAWING NUMBER:	P-2701

Autodesk Docs://90398-004_West Parish Filter WTF/90398-004-TB-P.rvt
4/23/2024 12:25:21 PM

NOTES:

1. SEE ARCHITECTURAL DRAWINGS FOR FIXTURE LOCATIONS AND MOUNTING HEIGHTS.
2. GENERAL CONTRACTOR SHALL ENSURE THAT HVAC SUBCONTRACTOR INSTALLS DUCTWORK WITH SUFFICIENT CLEARANCE FOR 4" SD PIPE BY PLUMBING SUBCONTRACTOR.

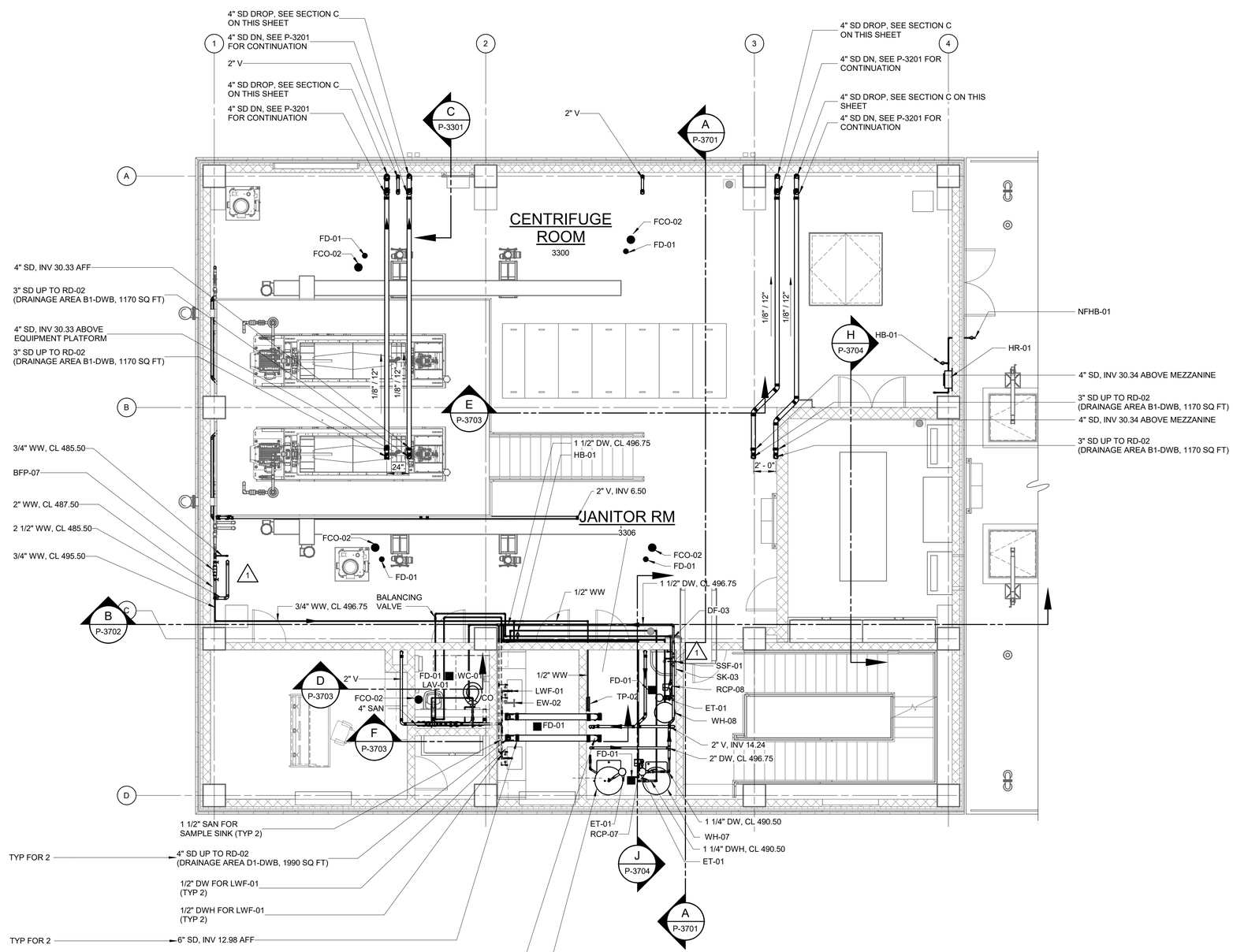

PLAN AT EL 484.50

3/16" = 1'-0"

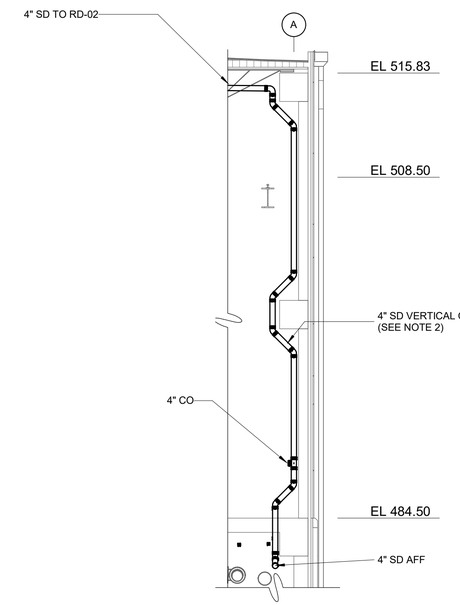

SECTION C P-3201

3/16" = 1'-0"

3/16" = 1'-0" 6 4 2 0 5'

REV	ISSUED FOR	DATE	BY
2	ADDENDUM NO. 5	APR 24	MWM
1	ADDENDUM NO. 2	MAR 24	MWM
0	ISSUED FOR BIDS	FEB 24	MWM

PROJECT ENGINEER:	K. BARRETT
DESIGNED BY:	D. WITTE
DRAWN BY:	D. KVOPKA
CHECKED BY:	S. BARRESE
IF THIS BAR DOES NOT MEASURE 1" THEN DRAWING IS NOT TO FULL SCALE	0 1/2" 1"

COMMONWEALTH OF MASSACHUSETTS DAVID WITTE No. 58104 PROFESSIONAL ENGINEER

Hazen

HAZEN AND SAWYER
100 GREAT MEADOW ROAD, SUITE 702
WETHERSFIELD, CT 06109

SPRINGFIELD WATER AND SEWER COMMISSION

WEST PARISH WATER TREATMENT PLANT

FILED SUB-BID

DEWATERING BUILDING
PLUMBING
PLAN AT EL 484.50

DATE:	FEBRUARY 2024
HAZEN NO.:	90398-004
CONTRACT NO.:	24-51
DRAWING NUMBER:	P-3301

Autodesk Docs://90398-004_West Parish Filter WTF/90398-004-DWB-P.rvt
4/23/2024 12:22:59 PM

SINGLE LINE SYMBOLS LEGEND

SYMBOL	DESCRIPTION
	WET SPRINKLER PIPE
	SPRINKLER DRAIN
	CAPPED PIPE
	OS&Y VALVE
	BUTTERFLY VALVE
	SWING CHECK VALVE
	UNION
FS	FLOW SWITCH
TS	TAMPER SWITCH
	DOUBLE CHECK DETECTOR ASSEMBLY
	FIRE DEPARTMENT CONNECTION (FDC)
	PUMP
A	ALARM CHECK VALVE
	FIRE HOSE VALVE (FHV)
P	PRESSURE GAUGE
	SIGHT GLASS
	FLEXIBLE HOSE
	STRAINER
	SIGNAL TO FACP
	SPRINKLER HEAD AND UNSPECIFIED PORTION OF BRANCHLINE

PLAN VIEW SYMBOLS PARTIAL LEGEND

XX	INTERMEDIATE LEVEL UPRIGHT SPRINKLER HEAD WITH GUARD AND COVER
	FIRE HOSE VALVE (WHERE THIS SYMBOL IS USED, THE ACTUAL ORIENTATION OF THE VALVE IS OBSCURED, AND THIS SYMBOL IS SHOWN ROTATED AROUND THE STANDPIPE CENTERLINE FOR CLARITY)

ABBREVIATIONS

ACV	ALARM CHECK VALVE
AFF	ABOVE FINISHED FLOOR
AHJ	AUTHORITY HAVING JURISDICTION
ANSI	AMERICAN NATIONAL STANDARDS INSTITUTE
APPROX	APPROXIMATE
ARCH	ARCHITECTURAL
BOT	BOTTOM
BP	BACKFLOW PREVENTER
BV	BUTTERFLY VALVE
CFM	CUBIC FEET PER MINUTE
CKV	CHECK VALVE
CL	CENTERLINE
CMR	CODE OF MASSACHUSETTS REGULATIONS
COL	COLUMN
CONC	CONCRETE
CONSTR	CONSTRUCTION
CONN	CONNECTION
CONT	CONTINU(ED), (OUS)
CV	CONTROL VALVE
DCV	DOUBLE CHECK VALVE
DCDA	DOUBLE CHECK DETECTOR ASSEMBLY
DIA	DIAMETER
DIM	DIMENSION
DIP	DUCTILE IRON PIPE
DN	DOWN
DR	DRAIN
DS	DUPLEX STRAINER
DWG(S)	DRAWING(S)
DWV	DRAIN, WASTE, VENT
EC	EXTENDED COVERAGE
EL.	ELEV ELEVATION
ELEC	ELECTRICAL
EMG	EMERGENCY
EOR	ENGINEER OF RECORD
EQ	EQUAL
EQUIP	EQUIPMENT
EXIST	EXISTING
FACP	FIRE ALARM CONTROL PANEL
FCVA	FLOOR CONTROL VALVE ASSEMBLY
FDC	FIRE DEPARTMENT CONNECTION
FHV	FIRE HOSE VALVE
FLA	FULL LOAD AMPS
FLEX	FLEXIBLE
FLR	FLOOR
FM	FACTORY MUTUAL
FP	FIRE PROTECTION
FPC	FIRE PROTECTION SUBCONTRACTOR
FPM	FEET PER MINUTE
FPP	FIRE PROTECTION PREACTION (SYSTEM)
FPV	FIRE PROTECTION CONTROL VALVE
FPW	FIRE PROTECTION WET (SYSTEM)
FS	FLOW SWITCH
FSCV	FIRE SERVICE CONTROL VALVE
FSP	FIRE STANDPIPE
FSS	FIRE SERVICE STRAINER
FTG	FOOTING
FSCV	FIRE SERVICE CONTROL VALVE
FSS	FIRE SERVICE STRAINER
GAL	GALLONS
GPM	GALLONS PER MINUTE
HP	HORSEPOWER
HR	HOUR
HT	HEIGHT
HVAC	HEATING, VENTILATING AND AIR CONDITIONING
I. E.	INVERT ELEVATION
IBC	INTERNATIONAL BUILDING CODE
INST	INSTANTANEOUS
INSUL	INSULATION
INV	INVERT
IWH	INSTANTANEOUS WATER HEATER
JP	JOCKEY PUMP
KW	KILOWATT
MAX	MAXIMUM
MECH	MECHANICAL
MFR	MANUFACTURER
MIN	MINIMUM
MISC	MISCELLANEOUS
N	NORTH
(N)	NEW
N/A	NOT APPLICABLE
NFPA	NATIONAL FIRE PROTECTION ASSOCIATION
NIC	NOT IN CONTRACT
NO.	NUMBER
NTS	NOT TO SCALE
PC	PUMP CONTROLLER
PD	PRESSURE DROP
PH	PHASE
PRESS	PRESSURE
PS	PRESSURE GAUGE
PSI	POUND PER SQUARE INCH
PRV	PRESSURE REDUCING VALVE
PW	POTABLE WATER
QR	QUICK RESPONSE
REF	REFERENCE
SCHED	SCHEDULE
SD	STANDPIPE
SEC	SECOND
SF	SQUARE FEET
SP	SPRINKLER (SYSTEM)
SPEC	SPECIFICATION(S)
SQ	SQUARE
SST	STAINLESS STEEL
STD	STANDARD
ST(L)	STEEL
STR(UCT)	STRUCTUR(E), (AL)
SYS	SYSTEM
TEMP	TEMPERATURE, TEMPORARY
TS	TAMPER SWITCH
T/S, TOS	TOP OF STEEL
TSP	TOTAL STATIC PRESSURE
TYP	TYPICAL
UP	UP
UL	UNDERWRITERS LABORATORIES
VIF	VERIFY IN FIELD
W/	WITH
WS	WATER SERVICE
ZCVA	ZONE CONTROL VALVE ASSEMBLY
#	POUND, NUMBER

2

PIPING DESIGNATION

6" FP

- FP — PIPING SYSTEM
- 6" — PIPING DIAMETER

FIRE PROTECTION SPRINKLERS

1

SYMBOL	INSTALLATION TYPE	COVERAGE TYPE	RESPONSE TYPE	MATERIAL	BASIS OF DESIGN MAKE	BASIS OF DESIGN MODEL	INLET (IN)	K-FACTOR (GPM/√PSI)	INSTALLATION AREAS	NOTES
	UPRIGHT	STANDARD	STANDARD	BRONZE/ BRASS	VICTAULIC	V2703	1/2	5.6	BELOW EXPOSED CEILINGS IN TREATMENT BUILDING, DEWATERING BUILING	1, 2, 3
QR	UPRIGHT	STANDARD	QUICK	BRONZE/ BRASS	VICTAULIC	V2704	1/2	5.6	BELOW EXPOSED CEILINGS AND ABOVE FALSE CEILINGS IN ALL LIGHT HAZARD AREAS	1, 2, 3
EC	UPRIGHT	EXTENDED 1	STANDARD	BRONZE/ BRASS	VICTAULIC	V3425	3/4	14.0	IN DEWATERING BUILDING, AS SHOWN IN PLANS	1, 2, 4
SS	UPRIGHT	STANDARD	STANDARD	STAINLESS STEEL	VIKING	VK338	1/2	5.6	CHEMICAL AREAS	1, 2, 3
	CONCEALED PENDANT	STANDARD	QUICK	BRONZE/ BRASS	VICTAULIC	V5606	1/2	5.6	INSIDE ACCOUSTIC CEILING TILES IN ADMIN AND DEWATERING BUILDING	1, 2, 5
	SIDEWALL	STANDARD	STANDARD	BRONZE/ BRASS	VICTAULIC	V2709	1/2	5.6	AS SHOWN IN PLANS	1, 2, 4
QR	SIDEWALL	STANDARD	QUICK	BRONZE/ BRASS	VICTAULIC	V2710	3/4	5.6	AS SHOWN IN PLANS	1, 2, 4

NOTES:
1. REFER TO SPECIFICATION SECTION 21 13 13 - WET PIPE SPRINKLERS FOR ADDITIONAL REQUIREMENTS.
2. FIRE PROTECTION ENGINEER IS RESPONSIBLE FOR SELECTING TEMPERATURE RATING OF SPRINKLER HEAD IN ACCORDANCE WITH NFPA 13 REQUIREMENTS.
3. WHERE HEADS ARE INTERMEDIATE-LEVEL HEADS ARE INSTALLED BELOW OBSTRUCTIONS, PROVIDE UL LISTED FM APPROVED GUARD AND COVER PLATE IN ACCODANCE WITH SECTION 21 13 13 REQUIREMENTS.
4. REFER TO PLANS FOR INSTALLATION LOCATIONS, COVERAGE AREAS, DESIGN FLOWS AN PRESSURES.
5. COVER PLATE FINISH SHALL BE WHITE, INSTALLED CENTERED IN CEILING TILES.

FIRE PROTECTION PIPE ACCESSORIES

TAG	COMPONENT	MANUFACTURER MAKE	MANUFACTURER MODEL	INLET (IN)	OUTLET (IN)	ACCESSORIES	NOTES
ACV-1	ALARM CHECK VALVE	VIKING	J-1	6	6	VERTICAL TRIM	1, 2
FDC-A/C	FIRE DEPARTMENT CONNECTION, 4-WAY, FLUSH	POTTER ROEMER	5436T	(4X) 2 1/2	6	-	1, 4
FDC-2	FIRE DEPARTMENT CONNECTION, 2-WAY, EXPOSED	DIXON	DCS4025F-P	(2X) 2 1/2	4	-	1, 4
FHV	CLASS I FIRE HOSE VALVE	ZURN	F100G	2 1/2	2 1/2	-	1
RCV-A/D	RISER CONTROL VALVE	VICTAULIC	705	6	6	-	1, 2
TDVA	TEST DRAIN AND VALVE ASSEMBLY	AGF	2511	1	1	"A-KIT" 406A-2 PRESSURE RELIEF VALVE WITH DRAIN TRIM	1, 5, 6
ZCVA-A/D	ZONE CONTROL VALVE ASSEMBLY	VICTAULIC	UMC	4	4	-	1, 2, 3

NOTES:
1. REFER TO APPLICABLE DIVISION 21 SPECIFICATIONS FOR MORE REQUIREMENTS.
2. FLOW AND TAMPER SWITCHES SHALL TIE INTO FIRE-ALARM. SEE FIRE ALARM DRAWINGS.
3. ASSEMBLY SHALL INCLUDE FACTORY-INSTALLLED BUTTERFLY VALVE WITH INTEGRAL TAMPER SWITCH.
4. FIRE PROTECTION ENGINEER SHALL COORDINATE WITH AHJ AND FIRE MARSHALL FOR INLET SIZE AND TYPE.
5. RELIEF VALVE SHALL OPEN AT 175 PSI.
6. NOT SHOWN ON DRAWINGS. INSTALL AT THE ENDS OF THE MOST REMOTE BRANCHLINES IN EACH ZONE.

REV	ISSUED FOR	DATE	BY
2	ADDENDUM NO. 5	APR 24	MWM
1	ADDENDUM NO. 4	APR 24	MWM
0	ISSUED FOR BIDS	FEB 24	MWM

PROJECT ENGINEER:	K. BARRETT
DESIGNED BY:	D. WITTE
DRAWN BY:	J. LURIE
CHECKED BY:	S. BARRESE

IF THIS BAR DOES NOT MEASURE 1" THEN DRAWING IS NOT TO FULL SCALE (0 1/2" 1")

COMMONWEALTH OF MASSACHUSETTS — DAVID WITTE No. 58104 — PROFESSIONAL ENGINEER

Hazen

HAZEN AND SAWYER
100 GREAT MEADOW ROAD, SUITE 702
WETHERSFIELD, CT 06109

SPRINGFIELD WATER AND SEWER COMMISSION

WEST PARISH WATER TREATMENT PLANT

FILED SUB-BID

FIRE PROTECTION
SYMBOLS, ABBREVIATIONS AND SCHEDULES

DATE:	FEBRUARY 2024
HAZEN NO.:	90398-004
CONTRACT NO.:	24-51
DRAWING NUMBER:	FP-002

Autodesk Docs://90398-004_West Parish Filter WTF/90398-004-ADM-FP.rvt
4/18/2024 4:57:06 PM

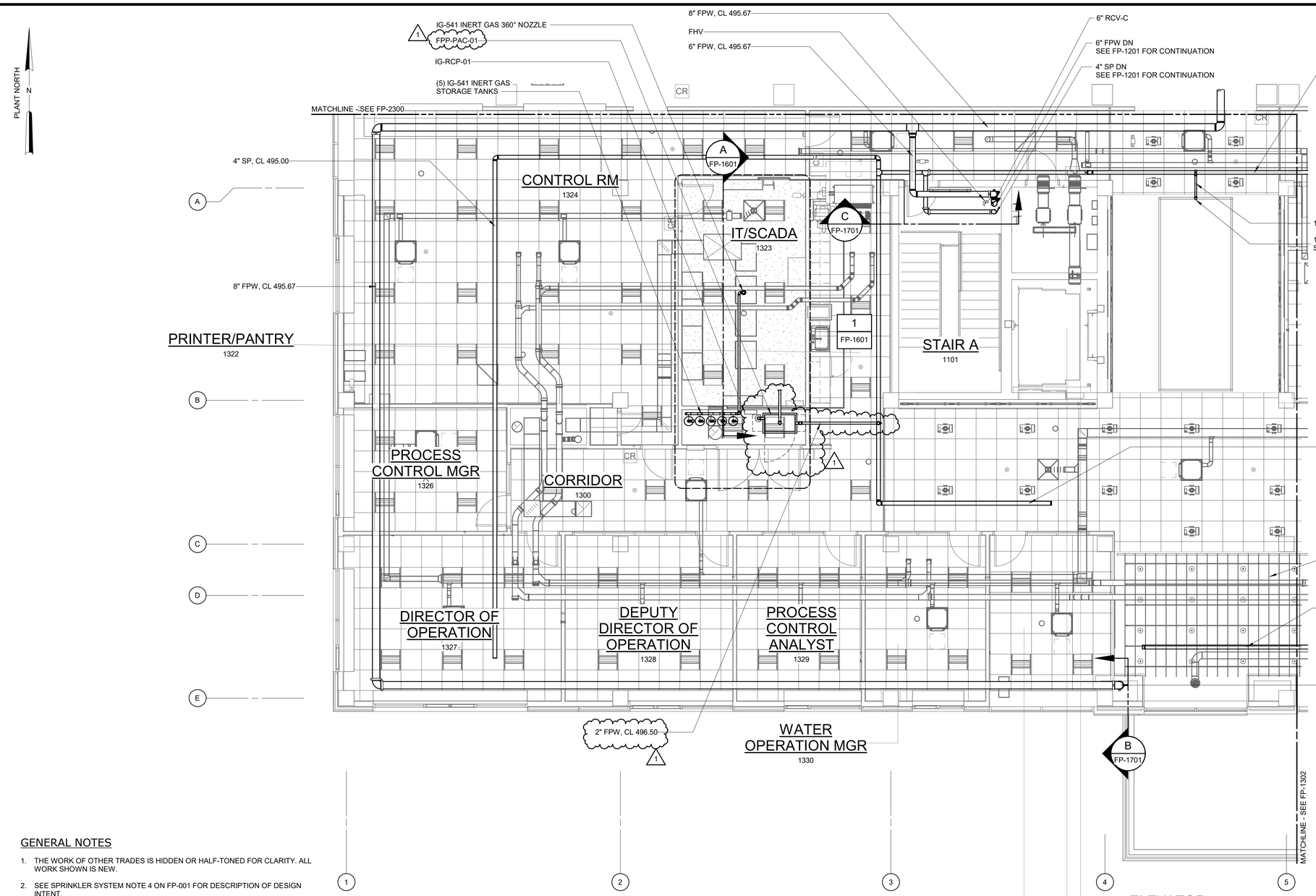

ENLARGED PLAN AT EL 485.00 - ADMINISTRATION AREA 1

3/16" = 1'-0"

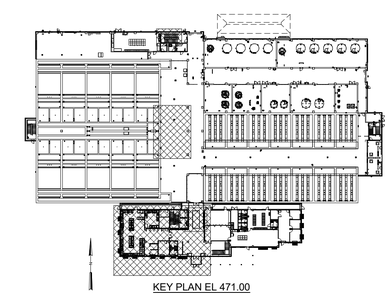

KEY PLAN EL 471.00

3/16" = 1'-0"

GENERAL NOTES

1. THE WORK OF OTHER TRADES IS HIDDEN OR HALF-TONED FOR CLARITY. ALL WORK SHOWN IS NEW.
2. SEE SPRINKLER SYSTEM NOTE 4 ON FP-001 FOR DESCRIPTION OF DESIGN INTENT.
3. SPRINKLER SPACING SHALL NOT BE AFFECTED BY THE OPEN GRID CEILING. GC SHALL COORDINATE THE CEILING INSTALLATION WITH THE FPC IN THE FOLLOWING MANNER:
   A. THE VERTICAL DEPTH OF PANELS SHALL NOT EXCEED THE HORIZONTAL SPACING BETWEEN PANELS.
   B. THE CEILING SHALL BE INSTALLED SO AS TO PROVIDE 48" MINIMUM CLEARANCE FROM THE TOP OF THE CEILING PANELS TO THE SPRINKLER DEFLECTOR.

REV	ISSUED FOR	DATE	BY
1	ADDENDUM NO. 5	APR 24	MWM
0	ISSUED FOR BIDS	FEB 24	MWM

PROJECT ENGINEER:	K. BARRETT
DESIGNED BY:	D. WITTE
DRAWN BY:	J. LURIE
CHECKED BY:	S. BARRESE

IF THIS BAR DOES NOT MEASURE 1" THEN DRAWING IS NOT TO FULL SCALE 0 1/2" 1"

COMMONWEALTH OF MASSACHUSETTS
DAVID WITTE
No. 58104
PROFESSIONAL ENGINEER

Hazen

HAZEN AND SAWYER
100 GREAT MEADOW ROAD, SUITE 702
WETHERSFIELD, CT 06109

SPRINGFIELD WATER AND SEWER COMMISSION

WEST PARISH WATER TREATMENT PLANT

FILED SUB-BID

WATER TREATMENT BUILDING
FIRE PROTECTION
ENLARGED PLAN AT EL 485.00 - ADMINISTRATION AREA 1

DATE:	FEBRUARY 2024
HAZEN NO.:	90398-004
CONTRACT NO.:	24-51
DRAWING NUMBER:	FP-1301

Autodesk Docs://90398-004_West Parish Filter WTF/90398-004-ADM-FP.rvt
4/18/2024 4:57:10 PM

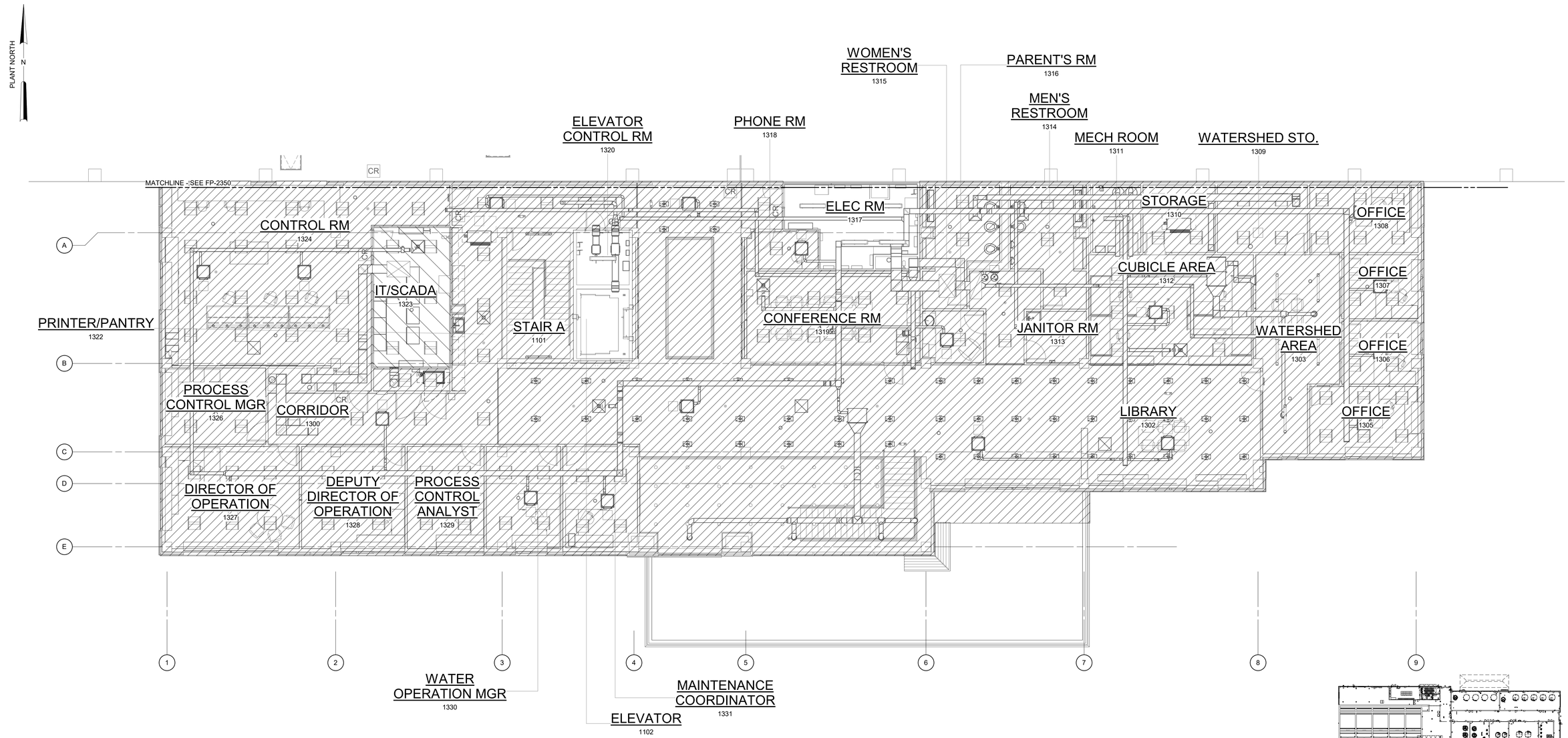

LEGEND

- LIGHT HAZARD (LH) OCCUPANCY
- ORDINARY HAZARD 1 (OH-1) OCCUPANCY
- LIGHT HAZARD (LH) OCCUPANCY, DOUBLE INTERLOCK-PREACTION SPRINKLERS, INERT GAS EXTINGUISHING SYSTEM (1)

DESIGN CRITERIA

LH:	0.1 GPM/SF OVER 1,500 SF PLUS 100 GPM OUTSIDE HOSE ALLOWANCE.
OH-1:	0.15 GPM/SF OVER 1,500 SF PLUS 250 GPM OUTSIDE HOSE ALLOWANCE.
OH-2:	0.2 GPM/SF OVER 1,500 SF PLUS 250 GPM HOSE ALLOWANCE. ESTIMATED 25 GPM HYDRAULIC BUILDUP. 550 GPM TOTAL FLOW DEMAND FOR OH-2 OCCUPANCY.
STANDPIPE:	CLASS I MANUAL WET. 500 GPM AT 100 PSI RESIDUAL PRESSURE AT THE TOP OF THE MOST REMOTE HOSE OUTLETS. 250 GPM AT EACH OF THE TWO NEXT MOST REMOTE HOSE OUTLETS.

GENERAL NOTES

1. THE WORK OF OTHER TRADES IS HIDDEN OR HALF-TONED FOR CLARITY. ALL WORK SHOWN IS NEW.

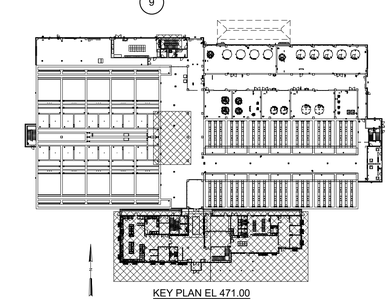

KEY PLAN EL 471.00

OVERALL SPRINKLER COVERAGE PLAN AT EL 485.00

1/8" = 1'-0"

1/8" = 1'-0" 8 6 4 2 0 8'

REV	ISSUED FOR	DATE	BY
1	ADDENDUM NO. 5	APR 24	MWM
0	ISSUED FOR BIDS	FEB 24	MWM

PROJECT ENGINEER:	K. BARRETT
DESIGNED BY:	D. WITTE
DRAWN BY:	J. LURIE
CHECKED BY:	S. BARRESE

IF THIS BAR DOES NOT MEASURE 1" THEN DRAWING IS NOT TO FULL SCALE 0 1/2" 1"

COMMONWEALTH OF MASSACHUSETTS DAVID WITTE No. 58104 PROFESSIONAL ENGINEER

Hazen

HAZEN AND SAWYER
100 GREAT MEADOW ROAD, SUITE 702
WETHERSFIELD, CT 06109

SPRINGFIELD WATER AND SEWER COMMISSION

WEST PARISH WATER TREATMENT PLANT

FILED SUB-BID

WATER TREATMENT BUILDING
FIRE PROTECTION
SPRINKLER COVERAGE PLAN AT EL 485.00 - ADMINISTRATION AREAS

DATE:	FEBRUARY 2024
HAZEN NO.:	90398-004
CONTRACT NO.:	24-51
DRAWING NUMBER:	FP-1350

Autodesk Docs://90398-004_West Parish Filter WTF/90398-004-ADM-FP.rvt
4/18/2024 4:57:12 PM

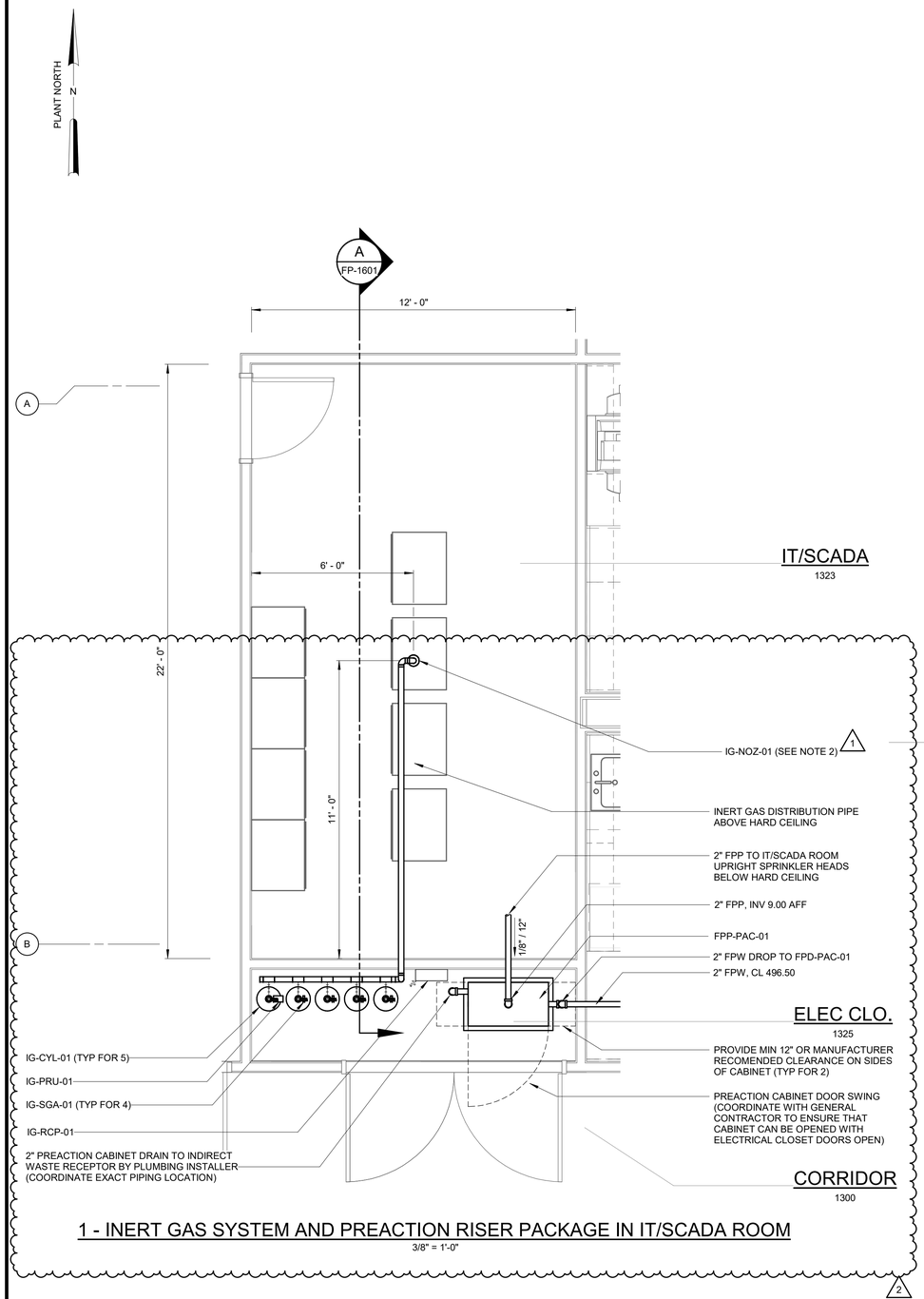

1 - INERT GAS SYSTEM AND PREACTION RISER PACKAGE IN IT/SCADA ROOM

3/8" = 1'-0"

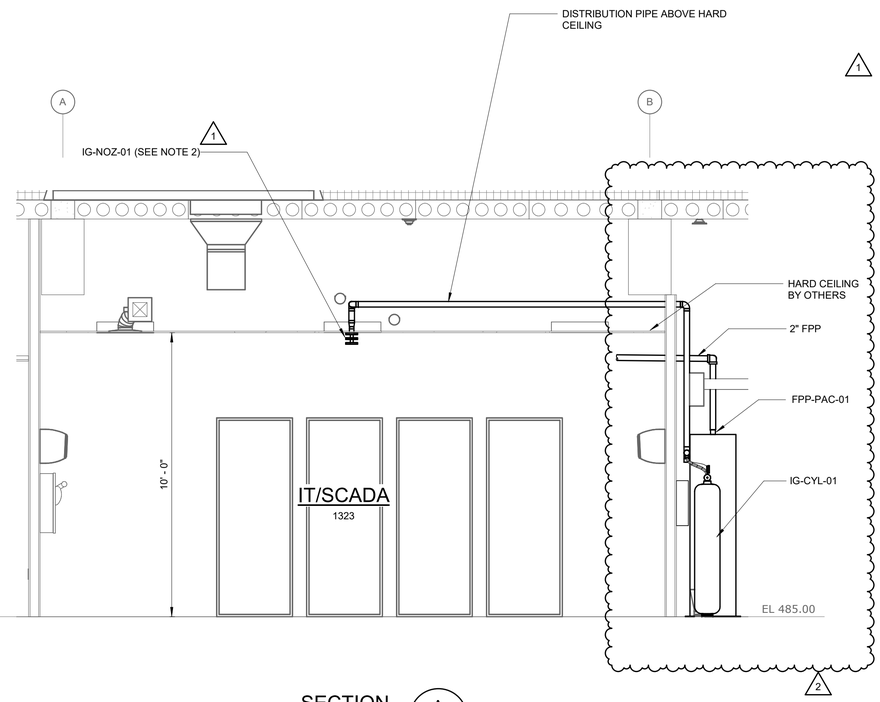

SECTION A / FP-1200

3/8" = 1'-0"

GENERAL NOTES

1. THE WORK OF OTHER TRADES IS HIDDEN OR HALF-TONED FOR CLARITY. ALL WORK SHOWN IS NEW.
2. NOZZLE SELECTION AND POSITION SHALL BE SUCH THAT THE TOTAL SOUND POWER EXPOSURE TO HARD-DISC DRIVES IN THE IT/SCADA ROOM IS BELOW MAXIMUM ACCEPTABLE LEVELS. COORDINATE WITH PROJECT ELECTRICAL ENGINEER. MAXIMUM SOUND POWER EXPOSURE SHALL ALSO TAKE INTO ACCOUNT ALARM HORNS.
3. FIELD DEVICES NOT SHOWN. FPC SHALL INSTALL DETECTION DEVICES, ALARMS, PULL STATIONS, ETC SEPARATE FROM THOSE INSTALLED BY THE ELECTRICAL SUBCONTRACTOR. INSTALLATION SHALL COMPLY WITH NFPA 72 AND NFPA 2001.
4. REFER TO HVAC DRAWINGS FOR ASSOCIATED PRESSURE RELIEF VENTING SYSTEM BY HVAC SUBCONTRACTOR.

INERT GAS SYSTEM SEQUENCE OF OPERATIONS

SYSTEM SEQUENCE OF OPERATION SHALL BE PRE-SET AT THE FACTORY AND PERFORM THE FOLLOWING:

1. DURING NORMAL CONDITIONS, IG-RCP-01 SHALL SEND A CONTINUOUS STATUS SIGNAL TO THE ADMIN BUILDING FACP (SEE E-1801) INDICATING THE STATUS OF THE INERT GAS SYSTEM. THE TWO STATES OF THIS SIGNAL SHALL BE "READY" WHEN NO ISSUE IS DETECTED AND "TROUBLE" WHEN THE PANEL'S TROUBLE RELAY IS ACTIVATED FOR ANY REASON. A TROUBLE SIGNAL SHALL ACTIVATE TWO SYSTEM IMPAIRMENT ALARMS. ONE SUCH ALARM SHALL ACTIVATE IN THE PROTECTED SPACE IN IT/SCADA ROOM (1323) AND LOCAL TO IG-RCP-01 IN THE ELECTRICAL CLOSET (1325). DEACTIVATION OF IMPAIRMENT ALARMS SHALL ONLY BE POSSIBLE BY MANUAL ACKNOWLEDGEMENT AT IG-RCP-01.
2. THE ACTIVATION OF ANY SINGLE AUTOMATIC DETECTION DEVICE ASSOCIATED WITH THE INERT GAS SYSTEM IN ROOM 1323 SHALL SEND A SIGNAL TO IG-RCP-01, WHICH SHALL PERFORM THE FOLLOWING OPERATIONS:
   A. ENERGIZE THE PRE-DISCHARGE TIMER (NOT TO EXCEED 30 SECONDS) AND OPERATE AUXILIARY FUNCTIONS
   B. ACTIVATE PRE-DISCHARGE ALARMS LOCAL TO IG-RCP-01 IN ROOM 1325. THESE ALARMS SHALL REMAIN ACTIVATED UNTIL THE INERT GAS CHARGE HAS BEEN RELEASED, OR UNTIL MANUALLY DISABLED AT IG-RCP-01.
   C. ACTIVATE EVACUATION ALARM WITHIN ROOM 1323. THESE ALARMS SHALL REMAIN ACTIVATED UNTIL MANUALLY DISABLED AT IG-RCP-01.
   D. ACTIVATE DISCHARGE WARNING ALARMS AT THE ENTRANCE TO ROOM 1323. THESE ALARMS SHALL REMAIN ACTIVATED UNTIL MANUALLY DISABLED AT IG-RCP-01.
   E. SEND A PRE-DISCHARGE ALARM SIGNAL TO THE FACP.
   F. *HVAC EQUIPMENT WITHIN THE PROTECTED SPACE, AUTOMATIC DAMPERS, AND AIR HANDLING UNITS SERVING THE PROTECTED SPACE SHALL BE SHUTDOWN BY OTHER EQUIPMENT
3. DURING THE PRE-DISCHARGE COUNTDOWN, ACTUATION OF THE ABORT BUTTON(S) ALLOWS THE PRE-DISCHARGE TIMER TO COUNTDOWN NORMALLY, BUT STOPS AND HOLDS AT 10 SECONDS UNTIL THE RELEASE OF THE ABORT. SUCCESSIVE ABORTS ARE POSSIBLE. FULL SYSTEM DEACTIVATION SHALL ONLY BE ACHIEVED BY KEY MAINTENANCE BYPASS SWITCH(ES) WITH KEY REMOVABLE ONLY IN THE NORMAL POSITION. DURING THESE CONDITIONS, IG-RCP-01 SHALL PERFORM THE FOLLOWING OPERATIONS:
   A. ACTUATION OF THE ABORT BUTTON(S) SHALL ACTIVATE TWO SYSTEM IMPAIRMENT ALARMS, ONE IN ROOM 1323 AND ONE IN ROOM 1325. THE PANEL SHALL SEND A "RELEASE DELAYED" STATUS SIGNAL TO THE FACP. DEACTIVATION OF IMPAIRMENT ALARMS SHALL ONLY BE POSSIBLE BY MANUAL ACKNOWLEDGEMENT AT IG-RCP-01.
   B. ACTUATION OF THE KEY BYPASS SWITCH SHALL ACTIVATE TWO SYSTEM IMPAIRMENT ALARMS, ONE IN ROOM 1323 ONE IN ROOM 1325. THE PANEL SHALL SEND A "RELEASE PREVENTED" STATUS SIGNAL TO THE FACP. DEACTIVATION OF IMPAIRMENT ALARMS SHALL ONLY BE POSSIBLE BY MANUAL ACKNOWLEDGEMENT AT IG-RCP-01.
4. IF THE PRE-DISCHARGE TIMER REACHES 0, IG-RCP-01 SHALL PERFORM THE FOLLOWING OPERATIONS:
   A. ACTIVATE THE PRIMARY RELEASE UNIT TO DISCHARGE THE INERT GAS SYSTEM.
   B. ACTIVATE DISCHARGE ALARMS IN ROOMS 1323, AND 1325. THESE ALARMS SHALL REMAIN ACTIVATED UNTIL MANUALLY DISABLED AT IG-RCP-01.
   C. SEND A DISCHARGE ALARM SIGNAL TO THE FACP.
   D. OPERATE AUXILIARY FUNCTIONS
5. ACTIVATION OF A MANUAL ACTIVATION STATION SHALL HAVE THE SAME EFFECT AS ACTIVATION OF AN AUTOMATIC DETECTION DEVICE (ITEM 2).

INERT GAS SYSTEM EQUIPMENT SCHEDULE

EQUIPMENT TAG	QTY	EQUIPMENT TYPE	MAKE	MODEL	VOLTS	AMPS	WEIGHT	NOTES
IG-CYL-01	5	INERT GAS STORAGE CYLINDER	KIDDE	38-421431-541	-	-	564.1	1 - 3
IG-NOZ-01	1	INERT GAS 360 DEGREE NOZZLE	KIDDE	38-407XXX-XXX	-	-	-	1, 2, 4
IG-PRU-01	1	PRIMARY RELEASE UNIT	KIDDE	38-400001-002	24	.75	-	1, 2
IG-RCP-01	1	RELEASING CONTROL PANEL	KIDDE	AEGIS 2.0	115	3	22	1, 2, 5
IG-SGA-01	4	SECONDARY CYLINDER GUAGE ASSEMBLY	KIDDE	38-400005-003	-	-	-	1, 2

NOTES:
1. REFER TO SPECIFICATION 21 22 00 FOR ADDITIONAL REQUIREMENTS.
2. MODEL NUMBERS ARE INCLUDED FOR BIDDING PURPOSES ONLY. FIRE PROTECTION ENGINEER AND SUBCONTRACTOR SHALL COORDINATE WITH SYSTEM MANUFACTURER OR A TECHNICIAN CERTIFIED BY THE MANUFACTURER FOR FINAL SELECTIONS. ALL INERT GAS SYSTEM EQUIPMENT SHALL BE OF THE SAME MANUFACTURER.
3. PROVIDE ANTI-RECOIL SAFETY CAP WITH ACTUATION TEST PIN AND TRANSPORT CAP.
4. PROVIDE NOZZLE SILENCER.

3/8" = 1'-0" 12" 0 1 2 4'

REV	ISSUED FOR	DATE	BY
2	ADDENDUM NO. 5	APR 24	MWM
1	ADDENDUM NO. 2	MAR 24	MWM
0	ISSUED FOR BIDS	FEB 24	MWM

PROJECT ENGINEER:	K. BARRETT
DESIGNED BY:	D. WITTE
DRAWN BY:	J. LURIE
CHECKED BY:	S. BARRESE

IF THIS BAR DOES NOT MEASURE 1" THEN DRAWING IS NOT TO FULL SCALE 0 1/2" 1"

COMMONWEALTH OF MASSACHUSETTS — DAVID WITTE No. 58104 — PROFESSIONAL ENGINEER

Hazen
HAZEN AND SAWYER
100 GREAT MEADOW ROAD, SUITE 702
WETHERSFIELD, CT 06109

SPRINGFIELD WATER AND SEWER COMMISSION

WEST PARISH WATER TREATMENT PLANT

FILED SUB-BID

WATER TREATMENT BUILDING
FIRE PROTECTION
ENLARGED PLAN - INERT GAS SYSTEM IN IT/SCADA ROOM

DATE:	FEBRUARY 2024
HAZEN NO.:	90398-004
CONTRACT NO.:	24-51
DRAWING NUMBER:	FP-1601

Autodesk Docs://90398-004_West Parish Filter WTF/90398-004-ADM-FP.rvt
4/18/2024 4:57:13 PM

ABBREVIATIONS

AA	AIR ASPIRATED
ADR	ADDRESSABLE RELAY
AE	ANALYSIS ELEMENT
AEM	ASSEMBLIES ELECTRONIC MONITOR (MONITORS LVTU'S)
AFG	ABOVE FINISHED GRADE
AHU	AIR HANDLING UNIT
AIC	AMPERE INTERRUPTING CAPACITY
AIT	ANALYSIS INDICATING TRANSMITTER
ANSI	AMERICAN NATIONAL STANDARDS INSTITUTE
ASCE	AMERICAN SOCIETY OF CIVIL ENGINEERS
ASME	AMERICAN SOCIETY OF MECHANICAL ENGINEERS
AF	AMPERE FRAME
AT	AMPERE TRIP
ATS	AUTOMATIC TRANSFER SWITCH
BC	BYPASS CONTACTOR
BIM	BREAKER INTERFACE MODULE
BKR	BREAKER
CBMM	CIRCUIT BREAKER METERING MODULE (FOR FEEDER BREAKERS
CED	CENTRAL ENERGY DISPLAY (MONITORS CBMM'S)
CLF	CURRENT LIMITING FUSE
CMU	CENTRAL MONITORING UNIT (MONITORS MMS')
CPT	CONTROL POWER TRANSFORMER
CT	CURRENT TRANSFORMER
DB	DUCTBANK
DSW	DISCONNECT SWITCH
EHH	ELECTRIC HAND HOLE
EMH	ELECTRIC MANHOLE
EO	ELECTRICALLY OPERATED
ETM	ELAPSED TIME METER
EXT	EXISTING
FAAP	FIRE ALARM ANNUNCIATOR PANEL
FACP	FIRE ALARM CONTROL PANEL
FS	FLOW SWITCH
FSL	FLOW SWITCH LOW
FVNR	FULL VOLTAGE NON-REVERSING
FVR	FULL VOLTAGE REVERSING
GFCI	GROUND FAULT CIRCUIT INTERRUPTER
GFCT	GROUND FAULT CURRENT TRANSFORMER
GNG	GO-NO GO
GND	GROUND
HOA	HAND-OFF-AUTO
HPU	HYDRAULIC POWER UNIT
IC	INPUT CONTACTOR
IEEE	INSTITUTE OF ELECTRICAL AND ELECTRONICS ENGINEERS
ISO	INTERNATIONAL ORGANIZATION FOR STANDARDIZATION
JB	JUNCTION BOX
LCP	LOCAL CONTROL PANEL
LCS	LOCAL CONTROL STATION
LP	LIGHTING PANEL
LS	LEVEL SWITCH
LSL	LEVEL SWITCH LOW
LSLL	LEVEL SWITCH LOW-LOW
LSH	LEVEL SWITCH HIGH
LSHH	LEVEL SWITCH HIGH-HIGH
LT	LEVEL TRANSMITTER
LVTU	LOW VOLTAGE TRIP UNIT
MAP	METERING AND PROTECTION
MCC	MOTOR CONTROL CENTER
MFR	MULTI-FUNCTION RELAY
MH	MANHOLE
MMP	METER MONITOR & PROTECTION
MMS	MICROPROCESSOR MOTOR STARTER
MOD	MOTOR OPERATED DAMPER
MOG	MOTOR OPERATED GATE

ABBREVIATIONS, CONT.

MOL	MOTOR OPERATED LOUVER
MOV	MOTOR OPERATED VALVE
MPR	MOTOR PROTECTION RELAY
MTD	MOUNTED
MTS	MANUAL TRANSFER SWITCH
MWTS	MOTOR WINDING TEMPERATURE SWITCH
NC	NORMALLY CLOSED
NEC	NATIONAL ELECTRICAL CODE
NEMA	NATIONAL ELECTRICAL MANUFACTURERS ASSN
NFPA	NATIONAL FIRE PROTECTION ASSOCIATION
NO	NORMALLY OPEN
NTS	NOT TO SCALE
NWP	NETWORK PROTECTOR
OC	OUTPUT CONTACTOR
OL	OVERLOAD
PB	PULLBOX
PC	PHOTOCELL
PIT	PRESSURE INDICATING TRANSMITTER
PLC	PROGRAMMABLE LOGIC CONTROLLER
PP	POWER PANEL
PST	PHASE SHIFTING TRANSFORMER
PT	POTENTIAL TRANSFORMER
PTT	PUSH TO TEST
PV	PHOTOVOLTAIC
R	END-OF-LINE RESISTOR
RCS	REMOTE CONTROL STATION
RECP	RECEPTACLE
RIO	REMOTE I/O
RM	ROOM
RTD	RESISTANCE THERMAL DEVICE
RVAT	REDUCED VOLTAGE AUTO TRANSFORMER
RVSS	REDUCED VOLTAGE SOLID STATE
S.E.	SERVICE ENTRANCE
SMM	SUB METER MODULE
SP. C.	SPARE CONDUIT
SPD	SURGE PROTECTIVE DEVICE
SST	STAINLESS STEEL
SWGR	SWITCHGEAR
TB	TEST BLOCK
TC	TIMED CLOSE
TO	TIMED OPEN
TSH	TWISTED SHIELDED
TYP	TYPICAL
UON	UNLESS OTHERWISE NOTED 1
UPS	UNINTERRUPTIBLE POWER SUPPLY
VCP	VENDOR CONTROL PANEL
VFD	VARIABLE FREQUENCY DRIVE
VIF	VERIFY IN FIELD
WPCR	WEATHER PROOF CORROSION RESISTANT
WT	WEIGHT
XFMR	TRANSFORMER

NOTES:

1. THE INSTALLATION OF ALL CONCRETE ENCASED ELECTRICAL CONDUITS SHALL COMPLY WITH ACI 318, SECTION 20.7. ELECTRICAL SUBCONTRACTOR SHALL SUPPLY EXPANSION JOINT FITTINGS AS REQUIRED FOR THERMAL EXPANSION AND DEFLECTION. 2
2. BOND ALL NEW CONCRETE ENCASED GROUND CONDUCTORS TO EXISTING GROUND CONDUCTORS IN ALL MANHOLES, PULL BOXES, CABLE TRAYS, AND SIMILAR LOCATIONS WHERE APPLICABLE.
3. UNLESS OTHERWISE SPECIFIED OR NOTED, ALL WALL MOUNTED ELECTRICAL PANELS, ENCLOSURES, AND SIMILAR EQUIPMENT SHALL BE MOUNTED 6'-6" (MAX) FROM THE TOP OF THE PANEL TO FINISHED FLOOR OR GRADE.
4. UNLESS OTHERWISE NOTED, ALL LIGHTING SWITCHES, CONTROL SWITCHES, AND SIMILAR EQUIPMENT SHALL BE MOUNTED WITH THEIR CENTERLINE APPROXIMATELY 4'-0" ABOVE FINISHED FLOOR, SLAB, OR GRADE.
5. A SEPARATE EQUIPMENT GROUNDING CONDUCTOR SHALL BE PROVIDED FOR EACH CIRCUIT (SEPARATE CONDUCTOR IN THE CONDUIT). THE CONDUCTOR SHALL BE TERMINATED AT THE PROPER DEVICE, TERMINAL, OR LUG AT THE POWER SOURCE (MCC GROUND BUS, PANELBOARD GROUND BUS, ETC.). GROUND CONDUCTOR SIZE SHALL BE PER THE LATEST EDITION OF THE NEC.
6. LIGHTNING PROTECTION SYSTEMS SHALL BE PROVIDED FOR THE STRUCTURES INDICATED ON THE DRAWINGS AND IN ACCORDANCE WITH SECTION 26 41 13.
7. FIRE ALARM SYSTEMS SHALL BE PROVIDED FOR THE STRUCTURES INDICATED ON THE DRAWINGS AND IN ACCORDANCE WITH SECTION 28 46 20.
8. REFERENCE SECTION 01 14 00 FOR CONSTRUCTION SEQUENCING REQUIREMENTS.
9. CONDUITS BELOW 3" ARE NOT SHOWN ON THE DRAWINGS AND SHALL BE FIELD RUN BY ELECTRICAL SUBCONTRACTOR. ELECTRICAL SUBCONTRACTOR SHALL REFER TO CONDUIT AND WIRE SCHEDULES, RISER DIAGRAMS, SINGLE LINE DIAGRAMS, AND OTHER DRAWINGS FOR CONDUIT AND WIRE REQUIREMENTS.
10. ALL POWER CONDUITS 3" AND LARGER ARE SHOWN DIAGRAMMATICALLY. EXACT ROUTING SHALL BE DETERMINED BY THE ELECTRICAL SUBCONTRACTOR IN THE FIELD, EXCEPT WHERE SPECIFICALLY DIMENSIONED ON PLANS.
11. EXACT CONDUIT STUB-UP LOCATIONS SHALL BE DETERMINED BY THE ELECTRICAL SUBCONTRACTOR BASED ON THE CERTIFIED MANUFACTURER'S DRAWINGS OF THE RESPECTIVE EQUIPMENT. CONDUITS SHALL BE INSTALLED COMMENSURATE WITH THE EQUIPMENT FURNISHED. 2
12. ALL ELECTRICAL NON-STRUCTURAL COMPONENTS ARE SUBJECT TO SEISMIC DESIGN CATEGORY 'B' AND ARE THEREFORE EXEMPT FROM SEISMIC ANCHORAGE AND BRACING AS STIPULATED IN SECTION 01 73 23 - SEISMIC ANCHORAGE AND BRACING.
13. ALL ELECTRICAL WORK MUST BE DONE IN ACCORDANCE WITH NFPA 70E.
14. ALL OUTLETS IN TREATMENT BUILDING AND DEWATERING BUILDING SHALL BE INSTALLED 4 FT AFG UON. 1
15. CABLE TRAY SYSTEM IS NOT SHOWN ON DRAWINGS, HOWEVER IT CAN BE USED BY ELECTRICAL SUBCONTRACTOR AS APPROVED BY ENGINEER. 2

REV	ISSUED FOR	DATE	BY
2	ADDENDUM NO. 5	APR 24	MWM
1	ADDENDUM NO. 2	MAR 24	MWM
0	ISSUED FOR BIDS	FEB 24	MWM

PROJECT ENGINEER: K. BARRETT
DESIGNED BY: A. PENA / D. SHAH
DRAWN BY: A. PENA / D. SHAH
CHECKED BY: G. MARKOU

IF THIS BAR DOES NOT MEASURE 1" THEN DRAWING IS NOT TO FULL SCALE 0 1/2" 1"

COMMONWEALTH OF MASSACHUSETTS
GEORGE MARKOU
ELECTRICAL
No. 50726
REGISTERED PROFESSIONAL ENGINEER
04/22/2024

Hazen
HAZEN AND SAWYER
100 GREAT MEADOW ROAD, SUITE 702
WETHERSFIELD, CT 06109

SPRINGFIELD WATER AND SEWER COMMISSION

WEST PARISH WATER TREATMENT PLANT

FILED SUB-BID

ELECTRICAL
GENERAL NOTES & ABBREVIATIONS

DATE: FEBRUARY 2024
HAZEN NO.: 90398-004
CONTRACT NO.: 24-51
DRAWING NUMBER: E-002

File: C:\USERS\DSHAH\DC\ACCDOCS\HAZEN AND SAWYER\90398-004_WEST PARISH FILTER WTP\PROJECT FILES\ELEC\E-002 Saved by DSHAH Save date: 4/22/2024 5:40 PM
PLOT DATE: 4/22/2024 5:42 PM BY: DSHAH

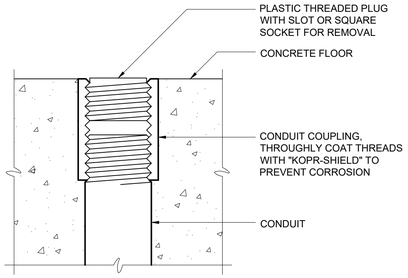

FLOOR STUB-UP FOR FUTURE CONDUIT

E-26-0101

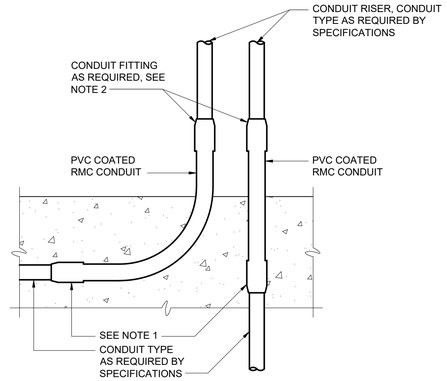

NOTES:

1. FOR ENCASED PVC CONDUIT USE PVC TERMINAL ADAPTER. FOR ALL OTHER CONDUIT TYPES, USE PVC COATED RMC COUPLINGS.
2. IF ANY THREADS OF THE PVC COATED RMC CONDUIT ARE EXPOSED AFTER INSTALLATION OF THE CONDUIT FITTING, THE CONDUIT FITTING SHALL BE PVC COATED TYPE WITH APPROPRIATE PVC SKIRTS. IF THE THREADS OF THE PVC COATED RMC CONDUIT ARE PROPERLY CUT SO THAT THEY ARE NOT EXPOSED AFTER INSTALLATION OF THE CONDUIT FITTING, THE CONDUIT MATERIAL SHALL BE AS REQUIRED BY THE SPECIFICATIONS, BASED ON THE MATERIAL OF THE CONDUIT RISER.

CONDUIT EXITING CONCRETE ENCASEMENT

E-26-0102

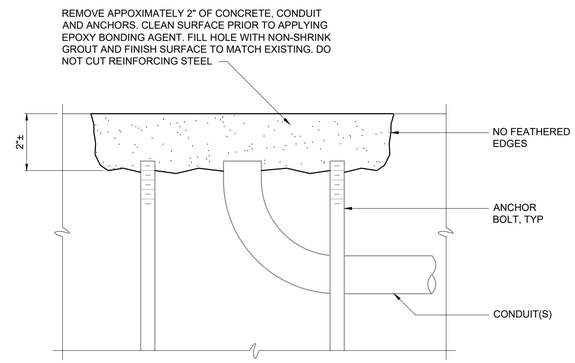

SEALING ABANDONED CONDUIT AND ANCHOR BOLTS

E-26-0103

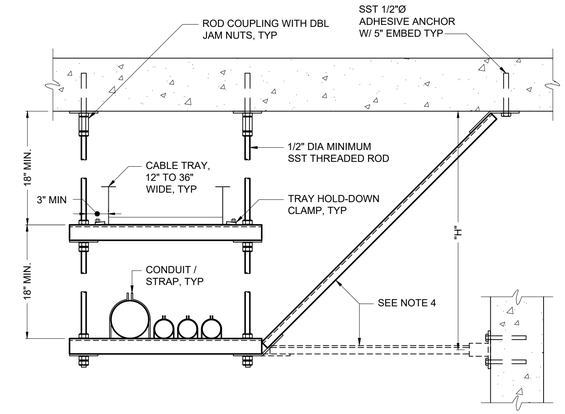

NOTES:

1. SPACE SUPPORTS AT 5'-0" MAXIMUM. HANGER SPACING SHALL BE BASED ON MAXIMUM LOAD.
2. ALL THREAD ROD SHALL BE USED ONLY FOR DUAL TRAYS / RACKS.
3. REFER TO AREA DESIGNATION DRAWINGS AND SPECIFICATIONS FOR REQUIRED MATERIALS OF CONSTRUCTION.
4. PREFORMED BRACING CHANNEL AT 30'-0" SPACING MAX. BRACE AT INTERMEDIATE LEVEL WHEN "H" DIMENSION EXCEEDS 6'-0".
5. STRUT SHALL BE 12 GAUGE MINIMUM.

SUSPENDED RACEWAY SUPPORT RACK

E-26-0201

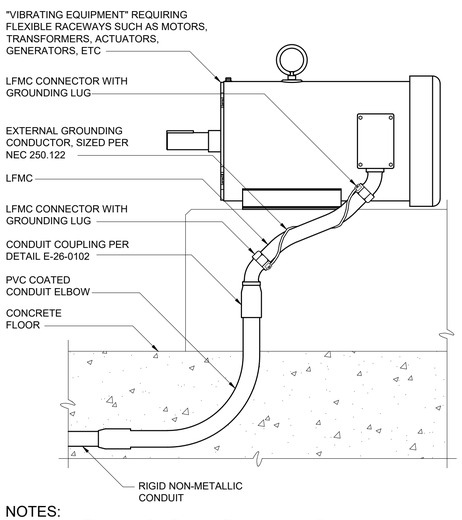

NOTES:

1. WHERE NON-METALLIC CONDUIT TRANSITIONS TO RIGID METALLIC CONDUIT AND / OR LIQUIDTIGHT FLEXIBLE METALLIC CONDUIT, (LFMC), TO FEED VIBRATING TYPE LOADS, THE ELECTRICAL SUBCONTRACTOR SHALL FURNISH AND INSTALL AN EXTERNAL BARE COPPER GROUNDING CONDUCTOR AND APPROVED GROUNDING LFMC CONNECTORS TO ENSURE GROUND CONTINUITY TO THE RIGID METALLIC CONDUIT AS SHOWN. THE GROUNDING CONDUCTOR SHALL BE SIZED ACCORDING TO NEC 250.122 AND BE NEATLY WRAPPED AROUND LFMC AS SHOWN. LFMC INSTALLED IN THIS MANNER CANNOT BE USED FOR A CONTINUOUS GROUND PATH PER NEC 350.60. 1

LFMC CONDUIT GROUND STRAP

E-26-0104

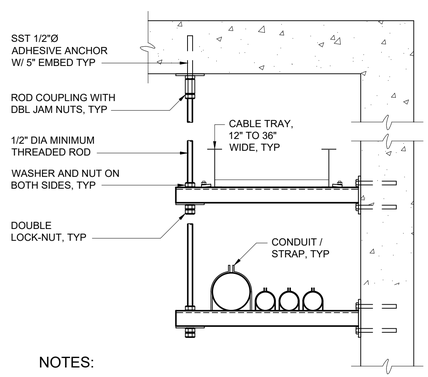

NOTES:

1. SPACE SUPPORTS AT 5'-0" MAXIMUM. HANGER SPACING SHALL BE BASED ON MAXIMUM LOAD.
2. ALL THREAD ROD SHALL BE USED ONLY FOR DUAL TRAY.
3. REFER TO AREA DESIGNATION DRAWINGS AND SPECIFICATIONS FOR REQUIRED MATERIALS OF CONSTRUCTION.
4. STRUT SHALL BE 12 GAUGE MINIMUM.

WALL MOUNTED RACEWAY SUPPORT RACK

E-26-0202

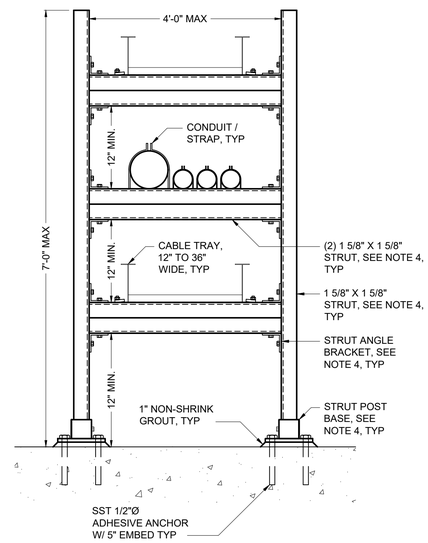

NOTES:

1. CONDUIT SUPPORT RACK SPACING SHALL BE BASED ON MAXIMUM SPAN ALLOWABLE FOR ANY INDIVIDUAL PIPE AND FOR MAXIMUM LOAD.
2. X-BRACING REQUIRED AT 30'-0" OC.
3. STRUT SHALL BE 12 GAUGE MINIMUM.
4. REFER TO AREA DESIGNATION DRAWINGS AND SPECIFICATIONS FOR REQUIRED MATERIALS OF CONSTRUCTION.

FREESTANDING RACEWAY SUPPORT RACK

E-26-0203

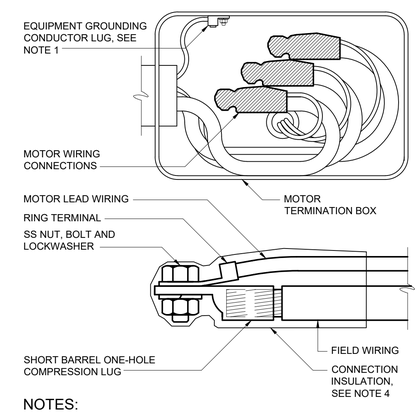

NOTES:

1. EQUIPMENT GROUNDING CONDUCTOR LUG SHALL BE ATTACHED WITH NUT AND LOCKWASHER TO THE MOTOR GROUNDING STUD. WHERE PROVIDED, FACTORY INSTALLED EQUIPMENT GROUNDING CONDUCTOR LUGS ARE ACCEPTABLE IN LIEU OF THE FIELD INSTALLED EQUIPMENT GROUNDING CONDUCTOR LUG.
2. RING TERMINALS ON MOTOR LEADS SHALL BE FACTORY INSTALLED BY THE MOTOR MANUFACTURER.
3. INSTALL SHORT BARREL COMPRESSION CONNECTOR ON FIELD WIRING WITH MANUFACTURER'S RECOMMENDED COMPRESSION TOOL AND CRIMPING DIE. CONNECTORS SHALL HAVE SMOOTHLY ROUNDED EDGES.
4. HEAT SHRINK OR COLD APPLIED CONNECTOR INSULATION LISTED FOR THE PURPOSE AND AS SPECIFIED.

LOW VOLTAGE MOTOR TERMINATION

E-26-0301

REV	ISSUED FOR	DATE	BY
1	ADDENDUM NO. 5	APR 24	MWM
0	ISSUED FOR BIDS	FEB 24	MWM

PROJECT ENGINEER: K. BARRETT
DESIGNED BY: A. PENA / D. SHAH
DRAWN BY: A. PENA / D. SHAH
CHECKED BY: G. MARKOU

IF THIS BAR DOES NOT MEASURE 1" THEN DRAWING IS NOT TO FULL SCALE — 0 1/2" 1"

COMMONWEALTH OF MASSACHUSETTS — GEORGE MARKOU — ELECTRICAL — No. 50726 — REGISTERED PROFESSIONAL ENGINEER
04/22/2024

Hazen
HAZEN AND SAWYER
100 GREAT MEADOW ROAD, SUITE 702
WETHERSFIELD, CT 06109

SPRINGFIELD WATER AND SEWER COMMISSION

WEST PARISH WATER TREATMENT PLANT

FILED SUB-BID

ELECTRICAL
STANDARD DETAILS - SHEET 1

DATE: FEBRUARY 2024
HAZEN NO.: 90398-004
CONTRACT NO.: 24-51
DRAWING NUMBER: E-003

File: C:\USERS\DKOLOKATHIS\DC\ACCDOCS\HAZEN AND SAWYER\90398-004_WEST PARISH FILTER WTP\PROJECT FILES\ELECIE-003 Saved by DKOLOKATHIS Save date: 4/22/2024 9:28 AM
PLOT DATE: 4/22/2024 9:40 AM BY: DKOLOKATHIS

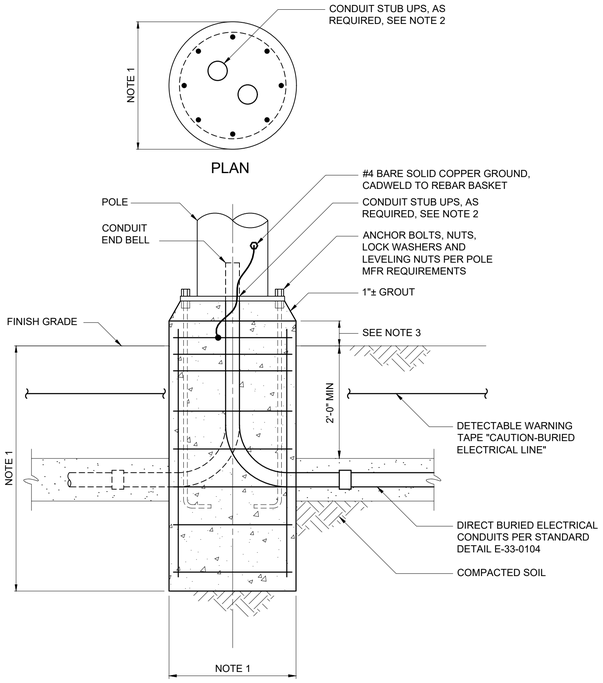

NOTES:

1. DIAMETER, DEPTH AND REINFORCEMENT SHALL BE DETERMINED BY POLE MANUFACTURER IN ACCORDANCE WITH SECTION 26 50 00. LOADING SHALL BE IN ACCORDANCE WITH SECTION 26 50 00.
2. ELECTRICAL SUBCONTRACTOR SHALL CAREFULLY COORDINATE LOCATION AND QUANTITY OF CONDUITS IN THE BASE SO THAT WHEN POLE IS INSTALLED, IT WILL FIT OVER THE CONDUITS. 1
3. PROJECTED HEIGHT ABOVE GRADE SHALL BE AS DESCRIBED IN THE POLE SCHEDULE IN 26 50 00.

POLE-MOUNTED LIGHTING FIXTURE BASE

E-26-0601

1

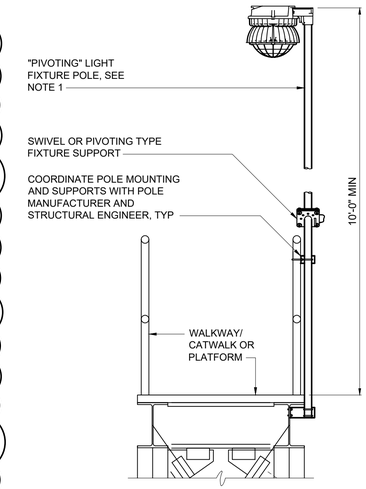

NOTES:

1. INSTALL PIVOTING LIGHT FIXTURE POLE PER MANUFACTURER'S REQUIREMENTS. ORIENT POLE SUCH THAT PIVOTED POSITION OF FIXTURE IS OVER CATWALK/WALKWAY OR PLATFORM. THOUGH A PIVOTING POLE IS SHOWN FOR REFERENCE, THIS DETAIL ALSO APPLIES TO ALTERNATE TYPES OF COLLAPSIBLE POLES (E.G. TELESCOPING) WHERE SPECIFIED IN SECTION 26 50 00.
2. POLE AND FIXTURE SHALL BE AS SPECIFIED IN SECTION 26 50 00.

WALKWAY OR PLATFORM POLE MOUNTED FIXTURE

E-26-0604

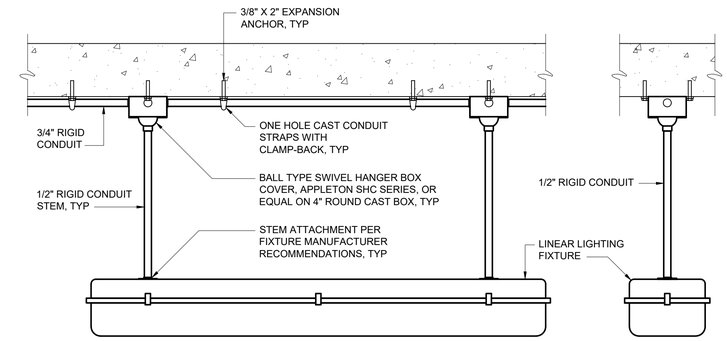

NOTES:

1. ADDITIONAL SEISMIC SUPPORTS MAY BE REQUIRED, SEE CODE SUMMARY DRAWING AND DRAWING E1 FOR SEISMIC CLASSIFICATIONS.
2. CONDUIT TYPE AND MATERIALS OF CONSTRUCTION FOR SUPPORTS AND HARDWARE SHALL BE AS REQUIRED FOR THE AREA IN WHICH THE FIXTURE IS INSTALLED AS SHOWN ON THE DRAWINGS AND IN ACCORDANCE WITH THE SPECIFICATIONS.
3. REFER TO AREA DESIGNATION DRAWINGS AND SPECIFICATIONS FOR REQUIRED MATERIALS OF CONSTRUCTION.

INDIVIDUAL PENDANT MOUNTED LINEAR FIXTURE

E-26-0605

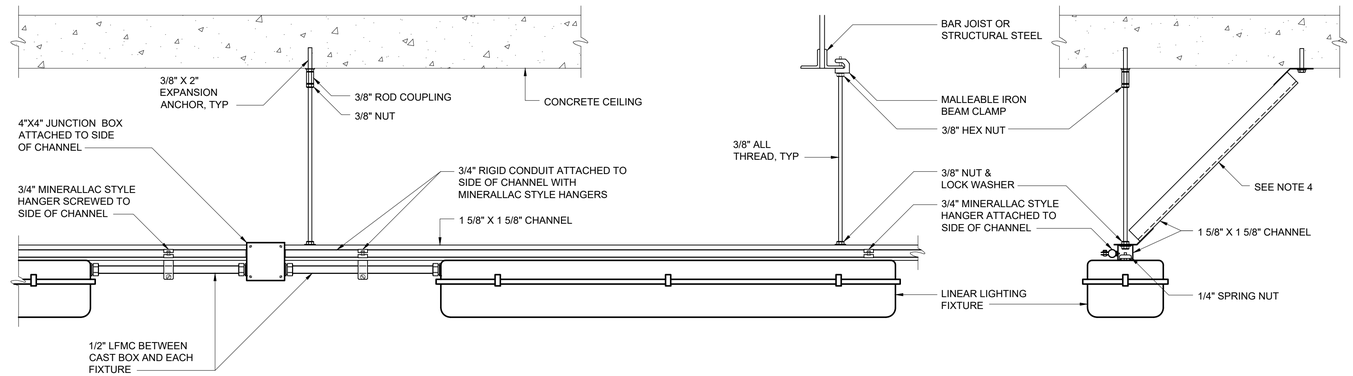

NOTES:

1. ADDITIONAL SEISMIC SUPPORTS MAY BE REQUIRED, SEE CODE SUMMARY DRAWING AND DRAWING E1 FOR SEISMIC CLASSIFICATIONS.
2. CONDUIT TYPE AND MATERIALS OF CONSTRUCTION FOR SUPPORTS AND HARDWARE SHALL BE AS REQUIRED FOR THE AREA IN WHICH THE FIXTURE IS INSTALLED AS SHOWN ON THE DRAWINGS AND IN ACCORDANCE WITH THE SPECIFICATIONS.
3. REFER TO AREA DESIGNATION DRAWINGS AND SPECIFICATIONS FOR REQUIRED MATERIALS OF CONSTRUCTION.
4. 45 DEGREE ANGLE BRACES SHALL BE INSTALLED TO PREVENT LATERAL MOVEMENT OF FIXTURE SUPPORTS. BRACES SHALL BE INSTALLED AT 8' INTERVALS ALONG ENTIRE LENGTH OF SUPPORT CHANNEL. TRANSVERSE MOVEMENT SHALL BE PREVENTED IN SIMILAR FASHION AT EACH END OF THE SUPPORT CHANNEL.

SUPPORT CHANNEL MOUNTED LINEAR FIXTURES

E-26-0606

REV	ISSUED FOR	DATE	BY
1	ADDENDUM NO. 5	APR 24	MWM
0	ISSUED FOR BIDS	FEB 24	MWM

PROJECT ENGINEER: K. BARRETT
DESIGNED BY: A. PENA / D. SHAH
DRAWN BY: A. PENA / D. SHAH
CHECKED BY: G. MARKOU

IF THIS BAR DOES NOT MEASURE 1" THEN DRAWING IS NOT TO FULL SCALE (0 1/2" 1")

COMMONWEALTH OF MASSACHUSETTS
GEORGE MARKOU
ELECTRICAL
No. 50726
REGISTERED PROFESSIONAL ENGINEER
04/22/2024

Hazen
HAZEN AND SAWYER
100 GREAT MEADOW ROAD, SUITE 702
WETHERSFIELD, CT 06109

SPRINGFIELD WATER AND SEWER COMMISSION

WEST PARISH WATER TREATMENT PLANT

FILED SUB-BID

ELECTRICAL
STANDARD DETAILS - SHEET 3

DATE: FEBRUARY 2024
HAZEN NO.: 90398-004
CONTRACT NO.: 24-51
DRAWING NUMBER: E-005

File: C:\USERS\MDREN\DC\ACCDOCS\HAZEN AND SAWYER\90398-004_WEST PARISH FILTER WTF\PROJECT FILES\ELEC\E-005 Saved by MDREN Save date: 4/19/2024 2:48 PM
PLOT DATE: 4/19/2024 2:51 PM BY: MDREN

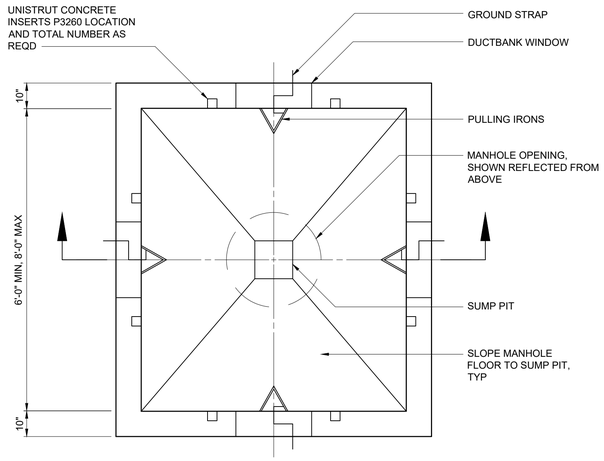

CAST-IN-PLACE ELECTRICAL MANHOLE - PLAN

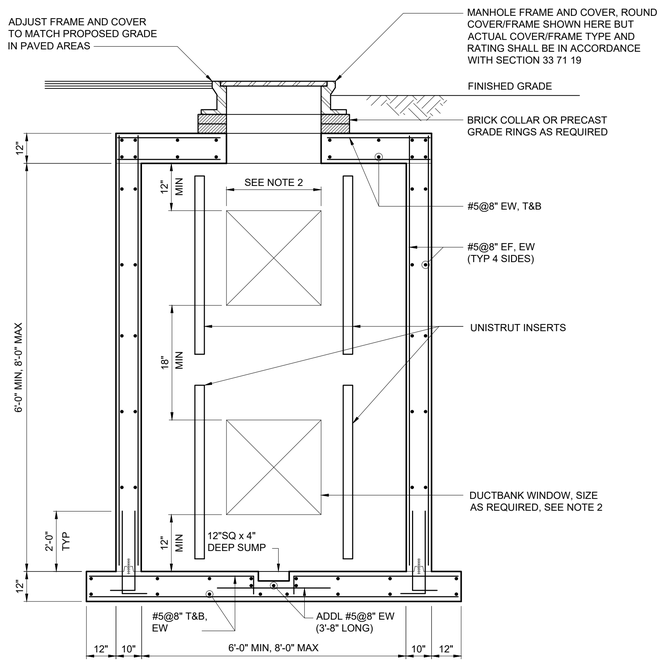

NOTES:

1. DUCTBANK WINDOW WIDTH SHALL BE LIMITED TO ONE-THIRD (1/3) OF THE WALL WIDTH, I.E. 2'-0" FOR A 6'-0" WALL.
2. CAST-IN-PLACE OR PRE-CAST MANHOLES MAY BE USED AT THE ELECTRICAL SUBCONTRACTOR'S OPTION. THIS DETAIL IS REPRESENTATIVE OF CAST-IN-PLACE MANHOLE CONSTRUCTION. IN EITHER CASE, MANHOLES SHALL BE FURNISHED AND/OR CONSTRUCTED IN ACCORDANCE WITH SECTION 33 71 19. 1

CAST-IN-PLACE ELECTRICAL MANHOLE - SECTION

E-33-0102

REV	ISSUED FOR	DATE	BY
1	ADDENDUM NO. 5	APR 24	MWM
0	ISSUED FOR BIDS	FEB 24	MWM

PROJECT ENGINEER:	K. BARRETT
DESIGNED BY:	A. PENA / D. SHAH
DRAWN BY:	A. PENA / D. SHAH
CHECKED BY:	G. MARKOU

IF THIS BAR DOES NOT MEASURE 1" THEN DRAWING IS NOT TO FULL SCALE 0 1/2" 1"

COMMONWEALTH OF MASSACHUSETTS
GEORGE MARKOU
ELECTRICAL
No. 50726
REGISTERED PROFESSIONAL ENGINEER
04/22/2024

Hazen

HAZEN AND SAWYER
100 GREAT MEADOW ROAD, SUITE 702
WETHERSFIELD, CT 06109

SPRINGFIELD WATER AND SEWER COMMISSION

WEST PARISH WATER TREATMENT PLANT

FILED SUB-BID

ELECTRICAL
STANDARD DETAILS - SHEET 6

DATE:	FEBRUARY 2024
HAZEN NO.:	90398-004
CONTRACT NO.:	24-51
DRAWING NUMBER:	E-008

File: C:\USERS\DKOLOKATHIS\DCACCDOCS\HAZEN AND SAWYER\90398-004_WEST PARISH FILTER WTP\PROJECT FILES\ELECE-008 Saved by DKOLOKATHIS Save date: 4/21/2024 8:19 PM
PLOT DATE: 4/22/2024 9:41 AM BY: DKOLOKATHIS

NOTES:

1. POWER AND COMMUNICATION TO EXISTING GASEOUS CHLORINE ALARM AT GATE 3 SHALL BE MAINTAINED THROUGHOUT CONSTRUCTION UNTIL NEW WTP IS OPERATIONAL AND GASEOUS CHLORINE IS NO LONGER ONSITE. NOTE ALARM SHALL BE RELOCATED WITH RELOCATIONS OF GATE 3 AS SHOWN ON THE CIVIL DRAWINGS AND AS NECESSARY DURING CONSTRUCTION AT NO ADDITIONAL COST TO THE OWNER.

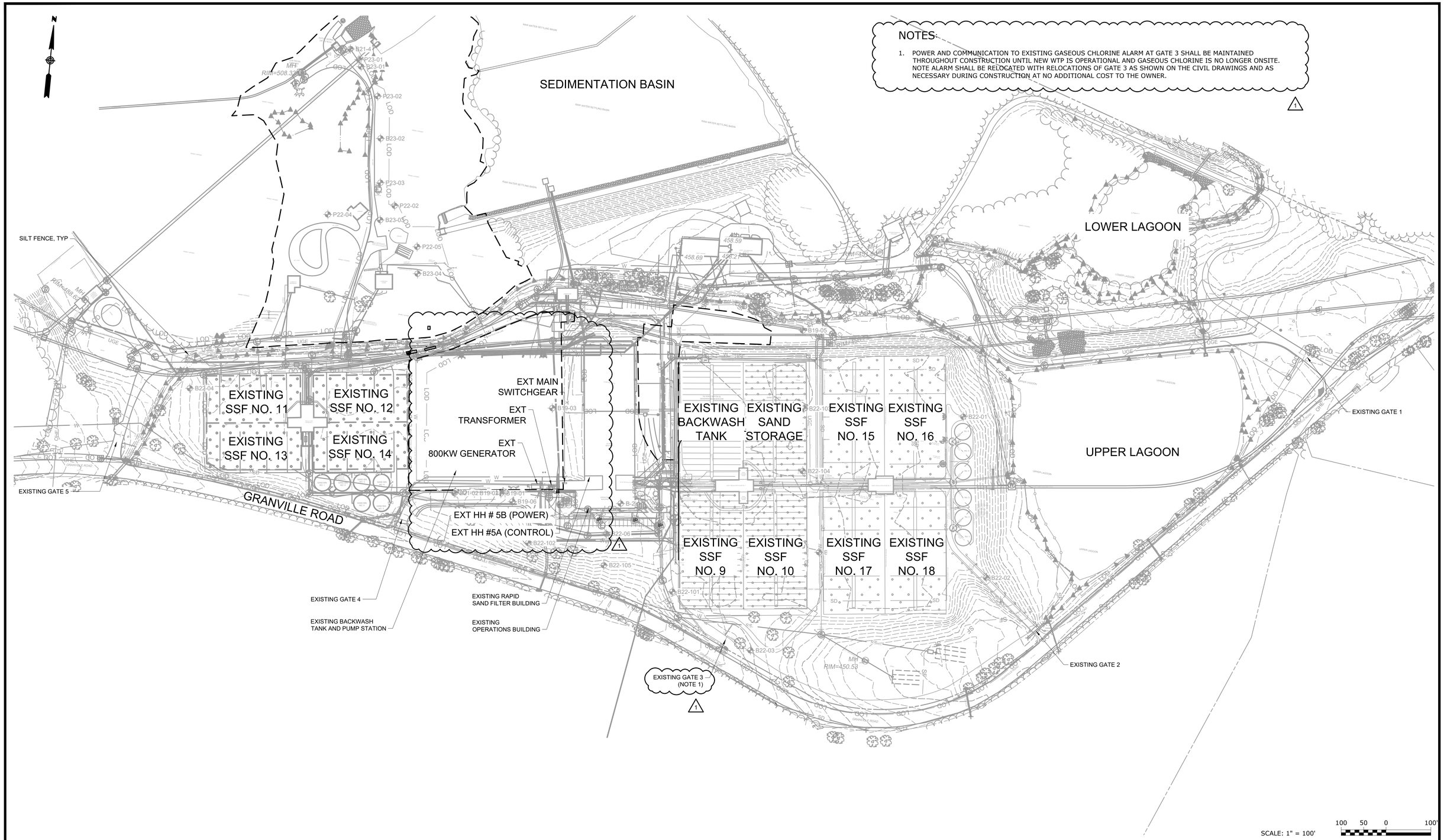

REV	ISSUED FOR	DATE	BY
1	ADDENDUM NO. 5	APR 24	MWM
0	ISSUED FOR BIDS	FEB 24	MWM

IF THIS BAR DOES NOT MEASURE 1" THEN DRAWING IS NOT TO FULL SCALE (0 1/2" 1")

PROJECT ENGINEER:	K. BARRETT
DESIGNED BY:	A. PENA / D. SHAH
DRAWN BY:	A. PENA / D. SHAH
CHECKED BY:	G. MARKOU

COMMONWEALTH OF MASSACHUSETTS
GEORGE MARKOU
ELECTRICAL
No. 50726
REGISTERED PROFESSIONAL ENGINEER
04/22/2024

Hazen

HAZEN AND SAWYER
100 GREAT MEADOW ROAD, SUITE 702
WETHERSFIELD, CT 06109

SPRINGFIELD WATER AND SEWER COMMISSION

WEST PARISH WATER TREATMENT PLANT

FILED SUB-BID

ELECTRICAL
OVERALL EXISTING POWER AND LIGHTING PLAN

DATE:	FEBRUARY 2024
HAZEN NO.:	90398-004
CONTRACT NO.:	24-51
DRAWING NUMBER:	E-011

File: C:\USERS\DSHAH\DC\ACCDOCS\HAZEN AND SAWYER\90398-004_WEST PARISH FILTER WTP\PROJECT FILES\ELECE-011 Saved by DSHAH Save date: 4/22/2024 1:57 PM
PLOT DATE: 4/22/2024 2:05 PM BY: DSHAH

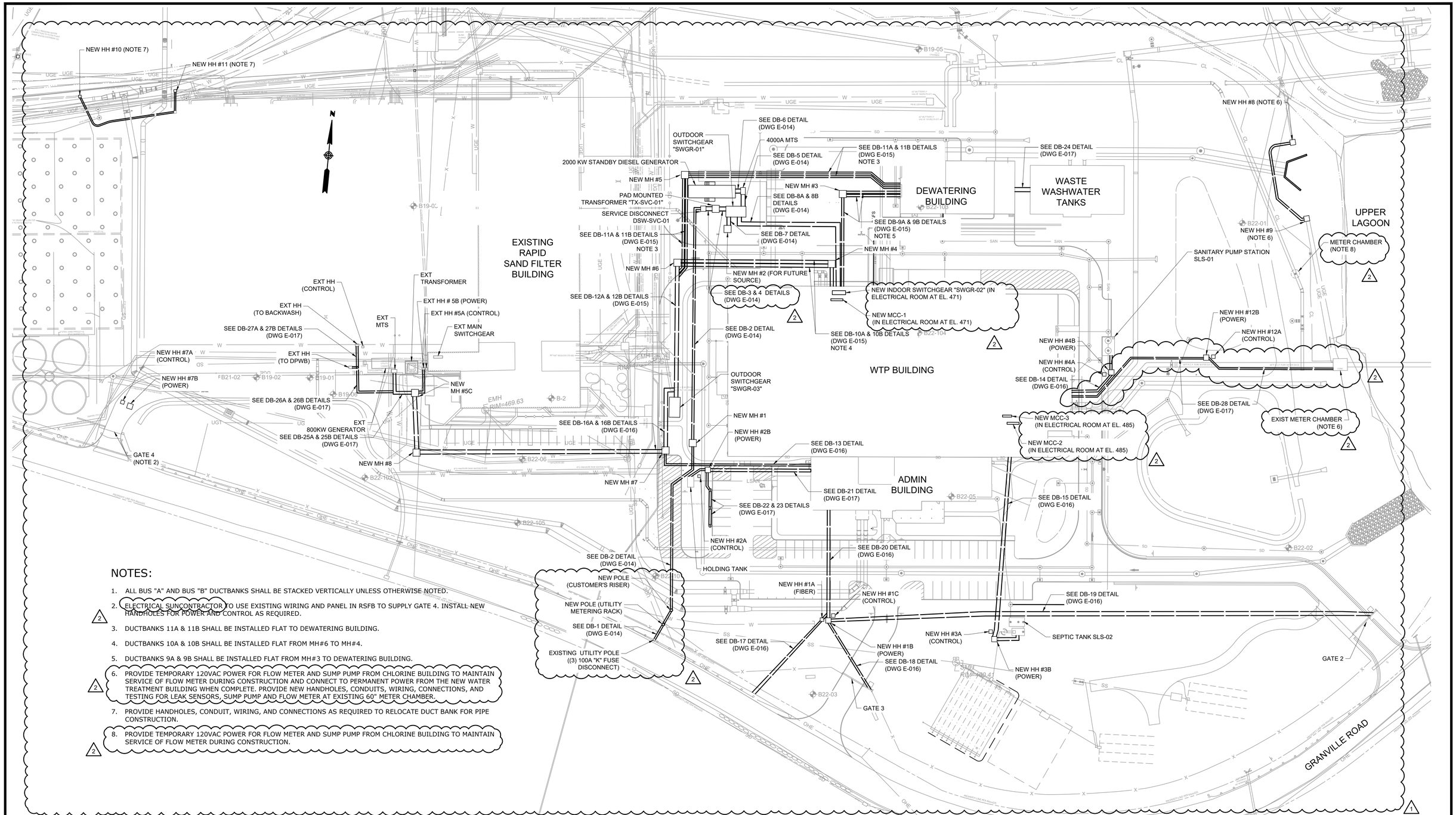

NOTES:

1. ALL BUS "A" AND BUS "B" DUCTBANKS SHALL BE STACKED VERTICALLY UNLESS OTHERWISE NOTED.
2. ELECTRICAL SUNCONTRACTOR TO USE EXISTING WIRING AND PANEL IN RSFB TO SUPPLY GATE 4. INSTALL NEW HANDHOLES FOR POWER AND CONTROL AS REQUIRED.
3. DUCTBANKS 11A & 11B SHALL BE INSTALLED FLAT TO DEWATERING BUILDING.
4. DUCTBANKS 10A & 10B SHALL BE INSTALLED FLAT FROM MH#6 TO MH#4.
5. DUCTBANKS 9A & 9B SHALL BE INSTALLED FLAT FROM MH#3 TO DEWATERING BUILDING.
6. PROVIDE TEMPORARY 120VAC POWER FOR FLOW METER AND SUMP PUMP FROM CHLORINE BUILDING TO MAINTAIN SERVICE OF FLOW METER DURING CONSTRUCTION AND CONNECT TO PERMANENT POWER FROM THE NEW WATER TREATMENT BUILDING WHEN COMPLETE. PROVIDE NEW HANDHOLES, CONDUITS, WIRING, CONNECTIONS, AND TESTING FOR LEAK SENSORS, SUMP PUMP AND FLOW METER AT EXISTING 60" METER CHAMBER.
7. PROVIDE HANDHOLES, CONDUIT, WIRING, AND CONNECTIONS AS REQUIRED TO RELOCATE DUCT BANK FOR PIPE CONSTRUCTION.
8. PROVIDE TEMPORARY 120VAC POWER FOR FLOW METER AND SUMP PUMP FROM CHLORINE BUILDING TO MAINTAIN SERVICE OF FLOW METER DURING CONSTRUCTION.

REV	ISSUED FOR	DATE	BY
2	ADDENDUM NO. 5	APR 24	MWM
1	ADDENDUM NO. 4	APR 24	MWM
0	ISSUED FOR BIDS	FEB 24	MWM

PROJECT ENGINEER:	K. BARRETT
DESIGNED BY:	A. PENA / D. SHAH
DRAWN BY:	A. PENA / D. SHAH
CHECKED BY:	G. MARKOU

IF THIS BAR DOES NOT MEASURE 1" THEN DRAWING IS NOT TO FULL SCALE 0 1/2" 1"

COMMONWEALTH OF MASSACHUSETTS GEORGE MARKOU ELECTRICAL No. 50726 REGISTERED PROFESSIONAL ENGINEER
04/22/2024

Hazen
HAZEN AND SAWYER
100 GREAT MEADOW ROAD, SUITE 702
WETHERSFIELD, CT 06109

SPRINGFIELD WATER AND SEWER COMMISSION

WEST PARISH WATER TREATMENT PLANT

FILED SUB-BID

ELECTRICAL
OVERALL SITE PLAN

DATE:	FEBRUARY 2024
HAZEN NO.:	90398-004
CONTRACT NO.:	24-51
DRAWING NUMBER:	E-012

File: C:\USERS\DSHAH\DC\ACCDOCS\HAZEN AND SAWYER\90398-004_WEST PARISH FILTER WTF\PROJECT FILES\ELEC\E-012 Saved by DSHAH Save date: 4/22/2024 5:17 PM
PLOT DATE: 4/22/2024 5:41 PM BY: DSHAH

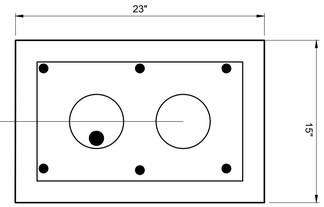

LEFT TO RIGHT
P-001
P-DB-1-SPARE-A

1 E-012 DB-1
NOT TO SCALE

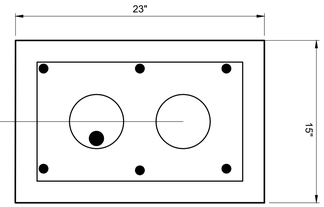

LEFT TO RIGHT
P-002
P-DB-2SPARE-A

2 E-012 DB-2
NOT TO SCALE

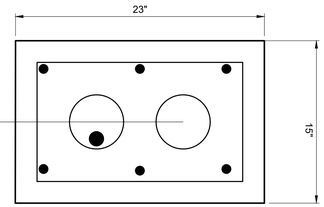

LEFT TO RIGHT
P-003
P-DB-3-SPARE-A

3 E-012 DB-3
NOT TO SCALE

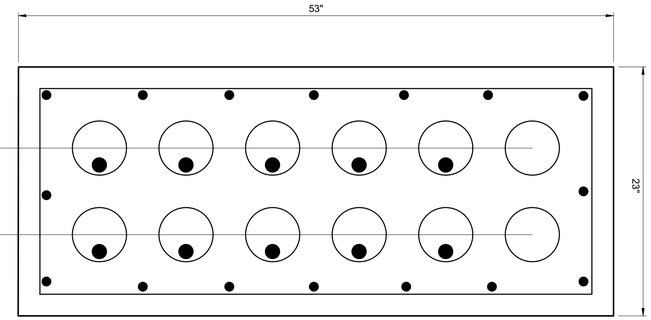

LEFT TO RIGHT
P-004-A
P-004-B
P-004-C
P-004-D
P-004-E
P-DB-4-SPARE-A

LEFT TO RIGHT
P-004-F
P-004-G
P-004-H
P-004-I
P-004-J
P-DB-4-SPARE-B

4 E-012 DB-4
NOT TO SCALE

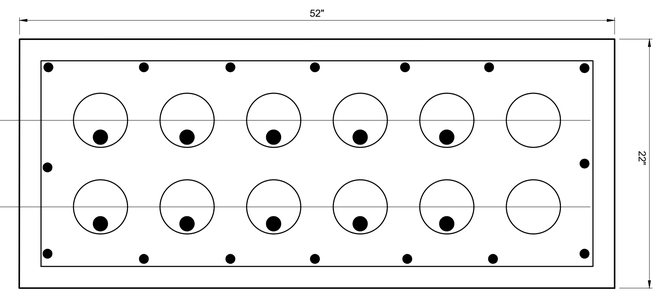

LEFT TO RIGHT
P-006-A
P-006-B
P-006-C
P-006-D
P-006-E
P-DB-6-SPARE-A

LEFT TO RIGHT
P-006-F
P-006-G
P-006-H
P-006-I
P-006-J
P-DB-6-SPARE-B

5 E-012 DB-5
NOT TO SCALE

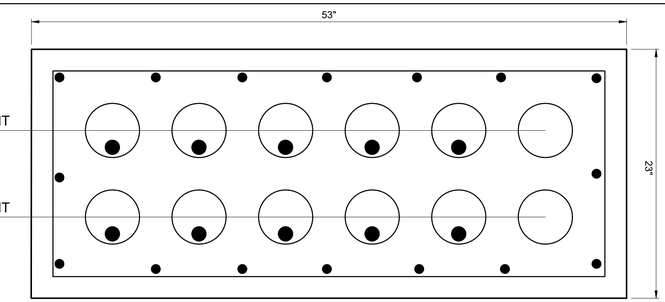

LEFT TO RIGHT
P-005-A
P-005-B
P-005-C
P-005-D
P-005-E
P-DB-7-SPARE-A

LEFT TO RIGHT
P-005-F
P-005-G
P-005-H
P-005-I
P-005-J
P-DB-7-SPARE-B

6 E-012 DB-6
NOT TO SCALE

1 2

REV	ISSUED FOR	DATE	BY
2	ADDENDUM NO. 5	APR 24	MWM
1	ADDENDUM NO. 3	MAR 24	MWM
0	ISSUED FOR BIDS	FEB 24	MWM

PROJECT ENGINEER:	K. BARRETT
DESIGNED BY:	A. PENA / D. SHAH
DRAWN BY:	A. PENA / D. SHAH
CHECKED BY:	G. MARKOU
IF THIS BAR DOES NOT MEASURE 1" THEN DRAWING IS NOT TO FULL SCALE	0 1/2" 1"

COMMONWEALTH OF MASSACHUSETTS
GEORGE MARKOU
ELECTRICAL
No. 50726
REGISTERED PROFESSIONAL ENGINEER
04/22/2024

Hazen
HAZEN AND SAWYER
100 GREAT MEADOW ROAD, SUITE 702
WETHERSFIELD, CT 06109

SPRINGFIELD WATER AND SEWER COMMISSION

WEST PARISH WATER TREATMENT PLANT

FILED SUB-BID

ELECTRICAL
MANHOLE, HANDHOLE, DUCTBANK SCHEDULES AND DETAILS - SHEET 1

DATE:	FEBRUARY 2024
HAZEN NO.:	90398-004
CONTRACT NO.:	24-51
DRAWING NUMBER:	E-014

File: C:\USERS\DKOLOKATHIS\DC\ACCDOCS\HAZEN AND SAWYER\90398-004_WEST PARISH FILTER WTP\PROJECT FILES\ELEC\E-014 Saved by DKOLOKATHIS Save date: 4/21/2024 8:26 PM
PLOT DATE: 4/22/2024 9:42 AM BY: DKOLOKATHIS

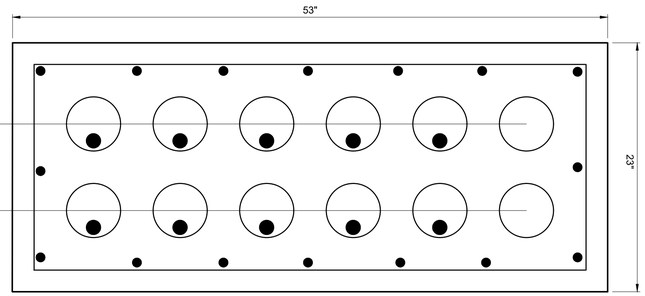

7 E-012 DB-7 NOT TO SCALE

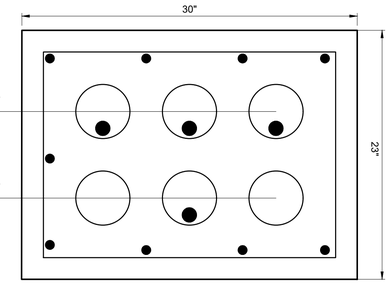

9A E-012 DB-9A NOT TO SCALE

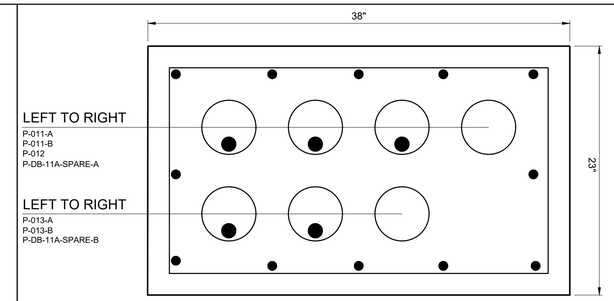

10A E-012 DB-10A NOT TO SCALE

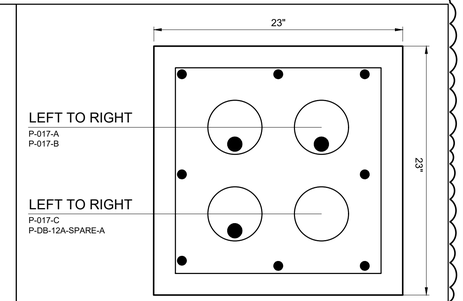

11A E-012 DB-11A NOT TO SCALE

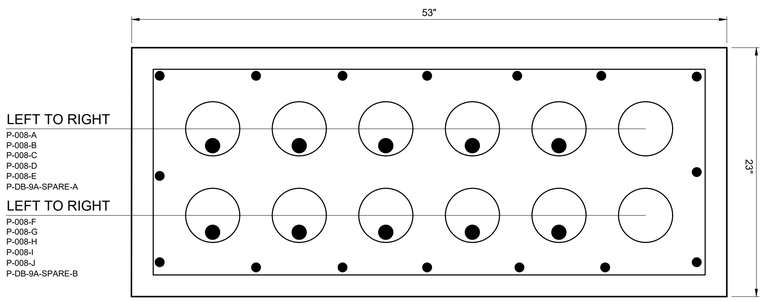

8A E-012 DB-8A NOT TO SCALE

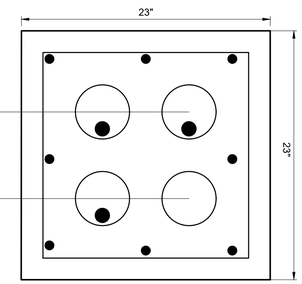

9B E-012 DB-9B NOT TO SCALE

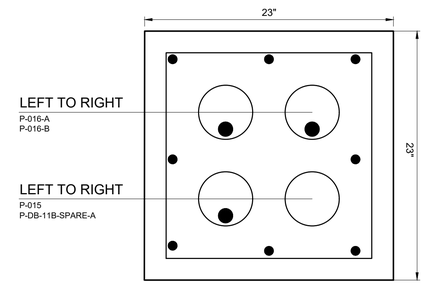

10B E-012 DB-10B NOT TO SCALE

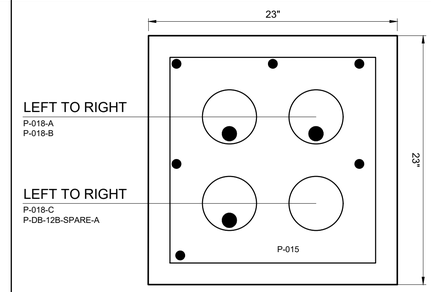

11B E-012 DB-11B NOT TO SCALE

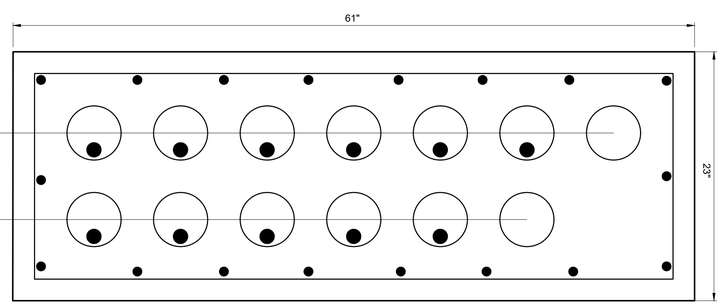

8B E-012 DB-8B NOT TO SCALE

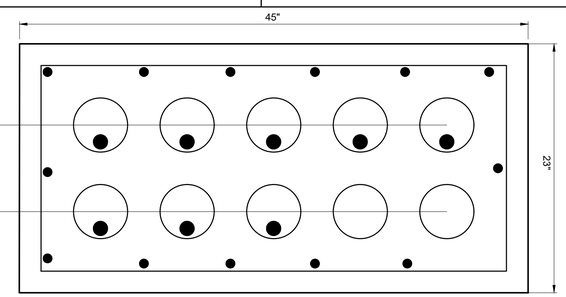

12A E-012 DB-12A NOT TO SCALE

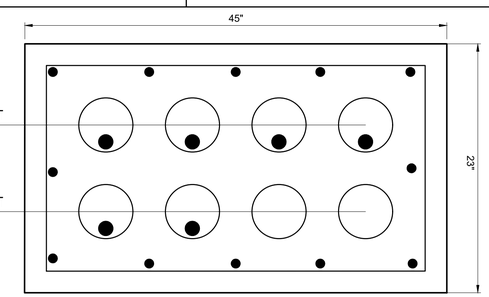

12B E-012 DB-12B NOT TO SCALE

2

1

REV	ISSUED FOR	DATE	BY
2	ADDENDUM NO. 5	APR 24	MWM
1	ADDENDUM NO. 3	MAR 24	MWM
0	ISSUED FOR BIDS	FEB 24	MWM

PROJECT ENGINEER:	K. BARRETT
DESIGNED BY:	A. PENA / D. SHAH
DRAWN BY:	A. PENA / D. SHAH
CHECKED BY:	G. MARKOU

IF THIS BAR DOES NOT MEASURE 1" THEN DRAWING IS NOT TO FULL SCALE 0 1/2" 1"

COMMONWEALTH OF MASSACHUSETTS
GEORGE MARKOU
ELECTRICAL
No. 50726
REGISTERED PROFESSIONAL ENGINEER
04/22/2024

Hazen

HAZEN AND SAWYER
100 GREAT MEADOW ROAD, SUITE 702
WETHERSFIELD, CT 06109

SPRINGFIELD WATER AND SEWER COMMISSION

WEST PARISH WATER TREATMENT PLANT

FILED SUB-BID

ELECTRICAL
MANHOLE, HANDHOLE, DUCTBANK SCHEDULES AND DETAILS - SHEET 2

DATE:	FEBRUARY 2024
HAZEN NO.:	90398-004
CONTRACT NO.:	24-51
DRAWING NUMBER:	E-015

File: C:\USERS\DKOLOKATHIS\DC\ACCDOCS\HAZEN AND SAWYER\90398-004 _WEST PARISH FILTER WTP\PROJECT FILES\ELEC\E-015 Saved by DKOLOKATHIS Save date: 4/22/2024 9:55 AM
PLOT DATE: 4/22/2024 2:13 PM BY: DKOLOKATHIS

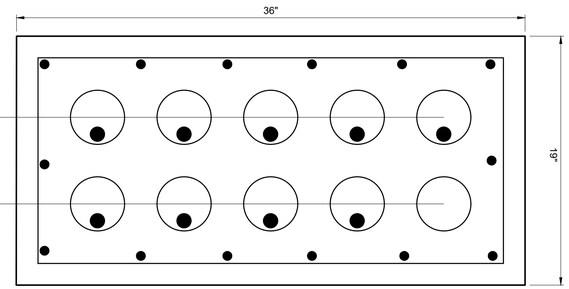

21 E-012 DB-21 NOT TO SCALE

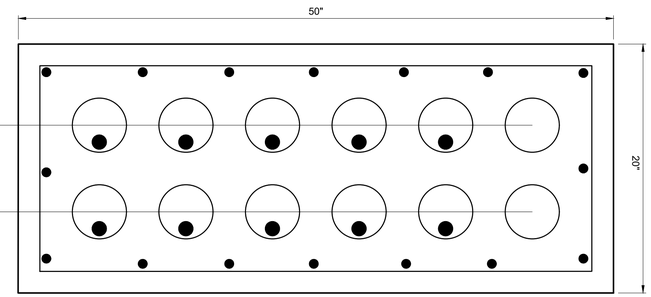

24 E-012 DB-24 NOT TO SCALE

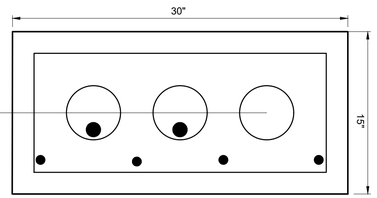

27A E-012 DB-27A NOT TO SCALE

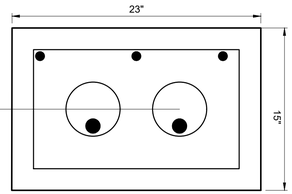

27B E-012 DB-27B NOT TO SCALE

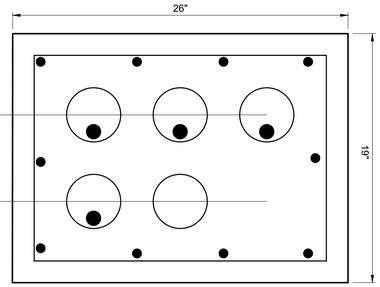

22 E-012 DB-22 NOT TO SCALE

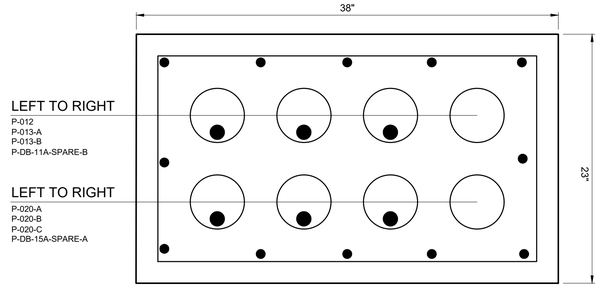

25A E-012 DB-25A NOT TO SCALE

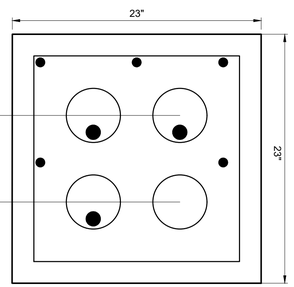

26A E-012 DB-26A NOT TO SCALE

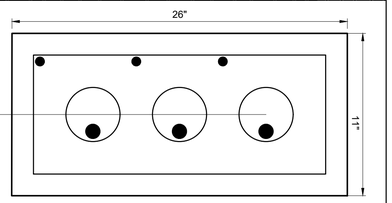

28 E-012 DB-28 NOT TO SCALE

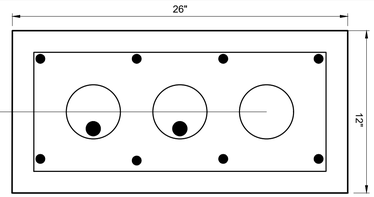

23 E-012 DB-23 NOT TO SCALE

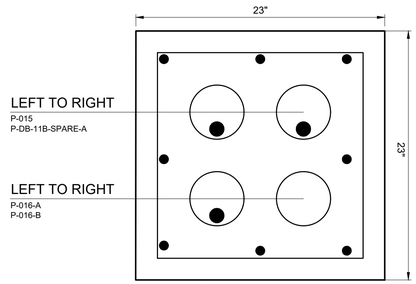

25B E-012 DB-25B NOT TO SCALE

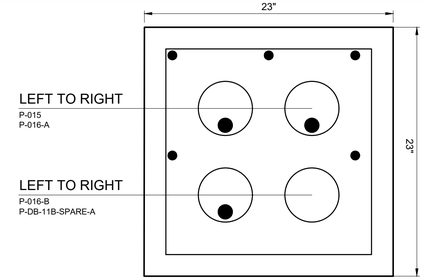

26B E-012 DB-26B NOT TO SCALE

2

2

1

File: C:\USERS\DKOLOKATHIS\DCACCDOCS\HAZEN AND SAWYER\90398-004_WEST PARISH FILTER WTP\PROJECT FILES\ELECE-017 Saved by DKOLOKATHIS Save date: 4/21/2024 8:31 PM
PLOT DATE: 4/22/2024 9:42 AM BY: DKOLOKATHIS

REV	ISSUED FOR	DATE	BY
2	ADDENDUM NO. 5	APR 24	MWM
1	ADDENDUM NO. 3	MAR 24	MWM
0	ISSUED FOR BIDS	FEB 24	MWM

PROJECT ENGINEER:	K. BARRETT
DESIGNED BY:	A. PENA / D. SHAH
DRAWN BY:	A. PENA / D. SHAH
CHECKED BY:	G. MARKOU
IF THIS BAR DOES NOT MEASURE 1" THEN DRAWING IS NOT TO FULL SCALE	0 1/2" 1"

COMMONWEALTH OF MASSACHUSETTS
GEORGE MARKOU
ELECTRICAL
No. 50726
REGISTERED PROFESSIONAL ENGINEER
04/22/2024

Hazen

HAZEN AND SAWYER
100 GREAT MEADOW ROAD, SUITE 702
WETHERSFIELD, CT 06109

SPRINGFIELD WATER AND SEWER COMMISSION

WEST PARISH WATER TREATMENT PLANT

FILED SUB-BID

ELECTRICAL
MANHOLE, HANDHOLE, DUCTBANK SCHEDULES AND DETAILS - SHEET 4

DATE:	FEBRUARY 2024
HAZEN NO.:	90398-004
CONTRACT NO.:	24-51
DRAWING NUMBER:	E-017

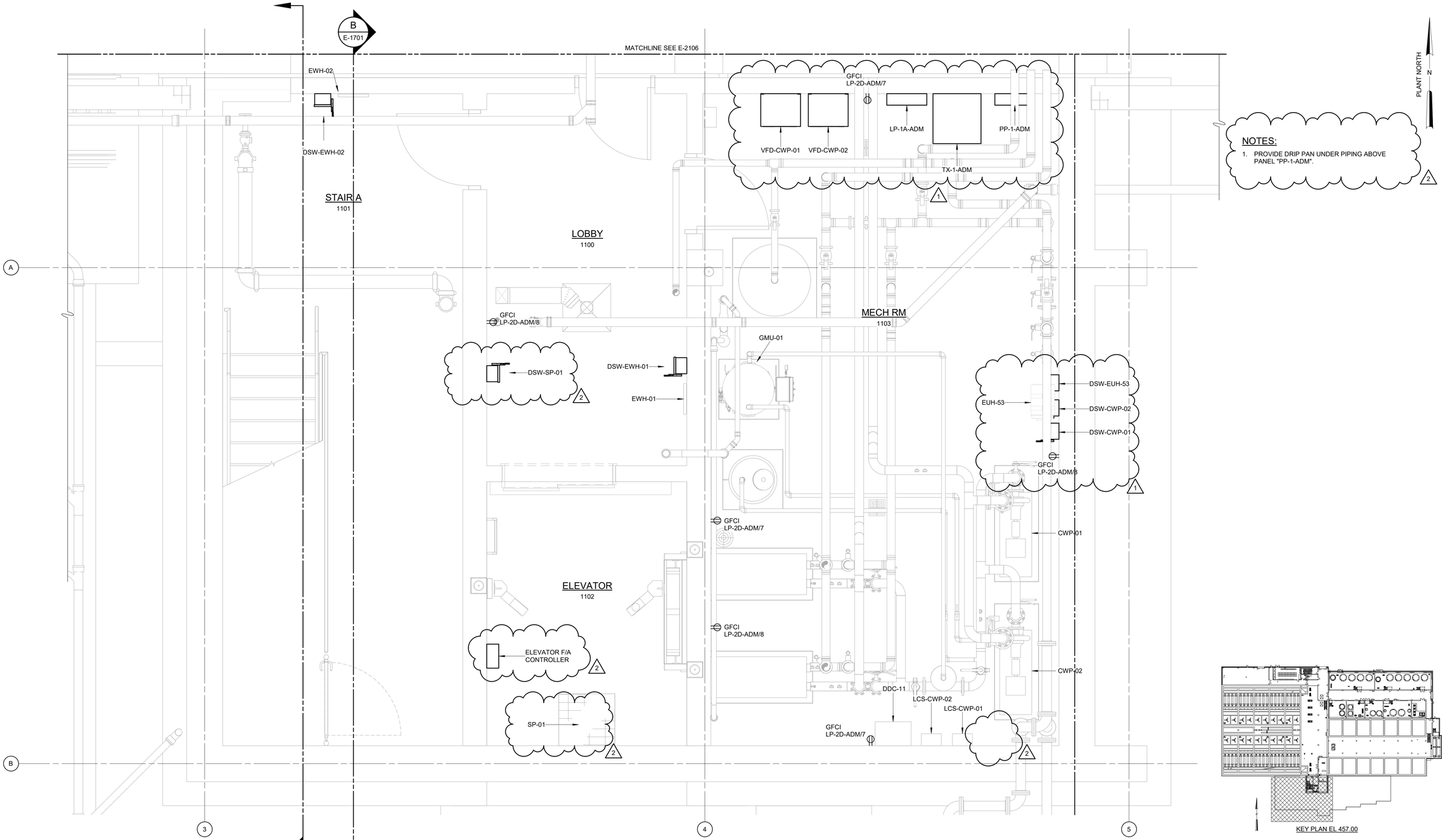

POWER PLAN AT EL 457.00 - AREA 1

1/2" = 1'-0"

1/2" = 1'-0"

12" 0 1 3'

REV	ISSUED FOR	DATE	BY
2	ADDENDUM NO. 5	APR 24	MWM
1	ADDENDUM NO. 3	MAR 24	MWM
0	ISSUED FOR BIDS	FEB 24	MWM

PROJECT ENGINEER:	K. BARRETT
DESIGNED BY:	A. PENA/D. SHAH
DRAWN BY:	A. PENA/D. SHAH
CHECKED BY:	G. MARKOU

IF THIS BAR DOES NOT MEASURE 1" THEN DRAWING IS NOT TO FULL SCALE 0 1/2" 1"

COMMONWEALTH OF MASSACHUSETTS
GEORGE MARKOU
ELECTRICAL
No. 50726
REGISTERED PROFESSIONAL ENGINEER

04/22/2024

Hazen

HAZEN AND SAWYER
100 GREAT MEADOW ROAD, SUITE 702
WETHERSFIELD, CT 06109

SPRINGFIELD WATER AND SEWER COMMISSION

WEST PARISH WATER TREATMENT PLANT

FILED SUB-BID

WATER TREATMENT BUILDING
ELECTRICAL
POWER PLAN AT 457.00 - ADMINISTRATION AREA 1

DATE:	FEBRUARY 2024
HAZEN NO.:	90398-004
CONTRACT NO.:	24-51
DRAWING NUMBER:	E-1101

Autodesk Docs://90398-004_West Parish Filter WTF/90398-004-ADM-E.rvt
4/22/2024 5:31:53 PM

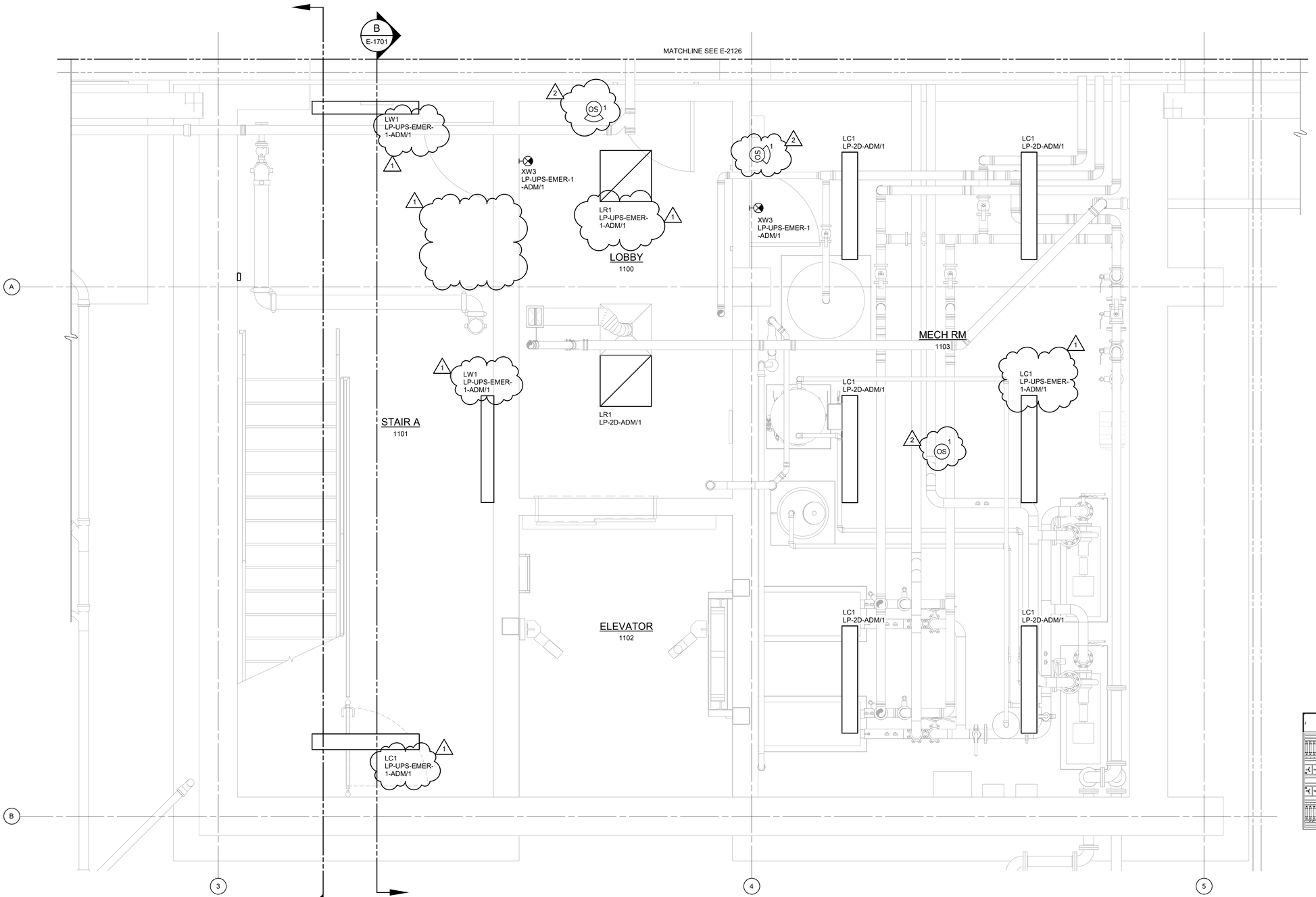

LIGHTING PLAN AT EL 457.00 - AREA 1

1/2" = 1'-0"

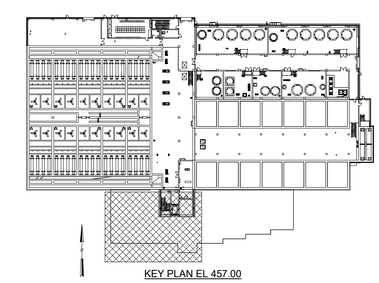

KEY PLAN EL 457.00

1/2" = 1'-0"

REV	ISSUED FOR	DATE	BY
2	ADDENDUM NO. 5	APR 24	MWM
1	ADDENDUM NO. 3	MAR 24	MWM
0	ISSUED FOR BIDS	FEB 24	MWM

PROJECT ENGINEER:	K. BARRETT
DESIGNED BY:	A. PENA/D. SHAH
DRAWN BY:	A. PENA/D. SHAH
CHECKED BY:	G. MARKOU

IF THIS BAR DOES NOT MEASURE 1" THEN DRAWING IS NOT TO FULL SCALE

COMMONWEALTH OF MASSACHUSETTS
GEORGE MARKOU
ELECTRICAL
No. 50726
REGISTERED PROFESSIONAL ENGINEER
04/22/2024

Hazen

HAZEN AND SAWYER
100 GREAT MEADOW ROAD, SUITE 702
WETHERSFIELD, CT 06109

SPRINGFIELD WATER AND SEWER COMMISSION

WEST PARISH WATER TREATMENT PLANT

FILED SUB-BID

WATER TREATMENT BUILDING
ELECTRICAL
LIGHTING PLAN AT 457.00 - ADMINISTRATION AREA 1

DATE:	FEBRUARY 2024
HAZEN NO.:	90398-004
CONTRACT NO.:	24-51
DRAWING NUMBER:	E-1121

Autodesk Docs://90398-004_West Parish Filter WTF/90398-004-ADM-E.rvt
4/22/2024 2:17:57 PM

NOTES:

1. RECEPTACLES IN LABORATORY 1221 & LAB MGR 1222 ON THIS SHEET SHALL BE POWERED BY "LP-LAB-ADM". ALL OTHER RECEPTACLES ON SHEET SHALL BE POWERED BY "LP-2D-ADM".

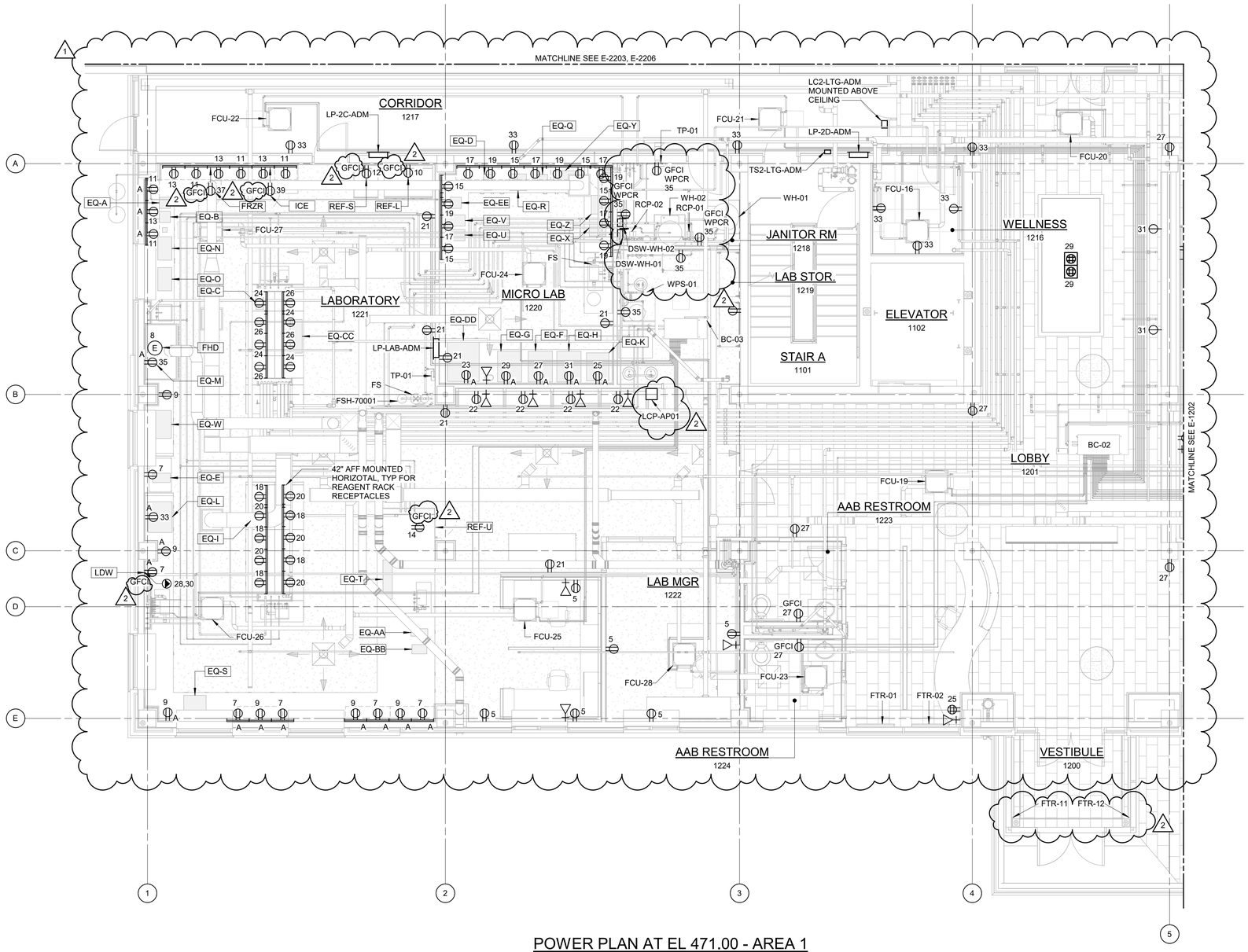

POWER PLAN AT EL 471.00 - AREA 1

3/16" = 1'-0"

LABORATORY EQUIPMENT SCHEDULE

MARK	NAME	REMARKS
EQ-A	A - pH METER	RELOCATED
EQ-AA	AA - TOC ANALYZER	RELOCATED
EQ-B	B - pH METER	RELOCATED
EQ-BB	BB - THM ANALYZER	RELOCATED
EQ-C	C - REACTOR BLOCK (SIR)	RELOCATED
EQ-CC	CC - WATER QUALITY TESTER	RELOCATED
EQ-D	D - ANALYTICAL BALANCE	RELOCATED
EQ-DD	DD - AUTOCLAVE	NEW
EQ-E	E - TOP LOAD BALANCE	RELOCATED
EQ-EE	EE - BUNSEN BURNER	RELOCATED
EQ-F	F - INCUBATOR	RELOCATED
EQ-G	G - INCUBATOR	RELOCATED
EQ-H	H - INCUBATOR	NEW
EQ-I	I - SPECTROPHOTOMETER	RELOCATED
EQ-K	K - AUTOCLAVE	NEW
EQ-L	L - DRYING OVEN	NEW
EQ-M	M - DRYING OVEN	RELOCATED
EQ-N	N/O - TURBIDIMETER	RELOCATED
EQ-O	O - TURBIDIMETER	RELOCATED
EQ-P	P - CONDUCTIVITY METER	RELOCATED
EQ-Q	Q - COLONY COUNTER	NEW
EQ-R	R - INCUBATOR	RELOCATED
EQ-S	S - ANALYZER	RELOCATED
EQ-T	T - JAR TESTER	RELOCATED
EQ-U	U - DISSECTING MICROSCOPE	RELOCATED
EQ-V	V- MICROSCOPE	RELOCATED
EQ-W	W - PUMP AND MANIFOLD	RELOCATED
EQ-X	X - WATER BATH	RELOCATED
EQ-Y	Y - WATER BATH	RELOCATED
EQ-Z	Z - TRAY SEALER	RELOCATED
FHD	60" FUME HOOD	NEW
FRZR	24" LH UNDER COUNTER FREEZER	NEW
ICE	24" UNDER COUNTER ICE MAKER	NEW
LDW	24" LAB DISHWASHER	NEW
REF-L	52" LAB REFRIGERATOR	NEW
REF-S	26" LAB REFRIGERATOR	NEW
REF-U	24" RH UNDER COUNTER LAB REFRIGERATOR	NEW

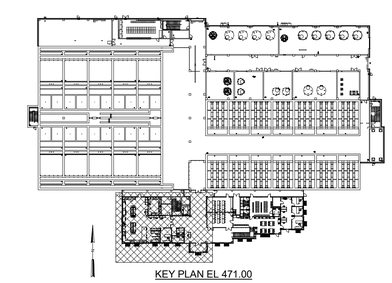

KEY PLAN EL 471.00

3/16" = 1'-0"

REV	ISSUED FOR	DATE	BY
2	ADDENDUM NO. 5	APR 24	MWM
1	ADDENDUM NO. 3	MAR 24	MWM
0	ISSUED FOR BIDS	FEB 24	MWM

PROJECT ENGINEER:	K. BARRETT
DESIGNED BY:	A. PENA/D. SHAH
DRAWN BY:	A. PENA/D. SHAH
CHECKED BY:	G. MARKOU

IF THIS BAR DOES NOT MEASURE 1" THEN DRAWING IS NOT TO FULL SCALE

COMMONWEALTH OF MASSACHUSETTS
GEORGE MARKOU
ELECTRICAL
No. 50726
REGISTERED PROFESSIONAL ENGINEER
04/22/2024

Hazen

HAZEN AND SAWYER
100 GREAT MEADOW ROAD, SUITE 702
WETHERSFIELD, CT 06109

SPRINGFIELD WATER AND SEWER COMMISSION

WEST PARISH WATER TREATMENT PLANT

FILED SUB-BID

WATER TREATMENT BUILDING
ELECTRICAL
POWER PLAN AT EL 471.00 - ADMINISTRATION AREA 1

DATE:	FEBRUARY 2024
HAZEN NO.:	90398-004
CONTRACT NO.:	24-51
DRAWING NUMBER:	E-1201

Autodesk Docs://90398-004_West Parish Filter WTF/90398-004-ADM-E.rvt
4/22/2024 12:14:49 PM

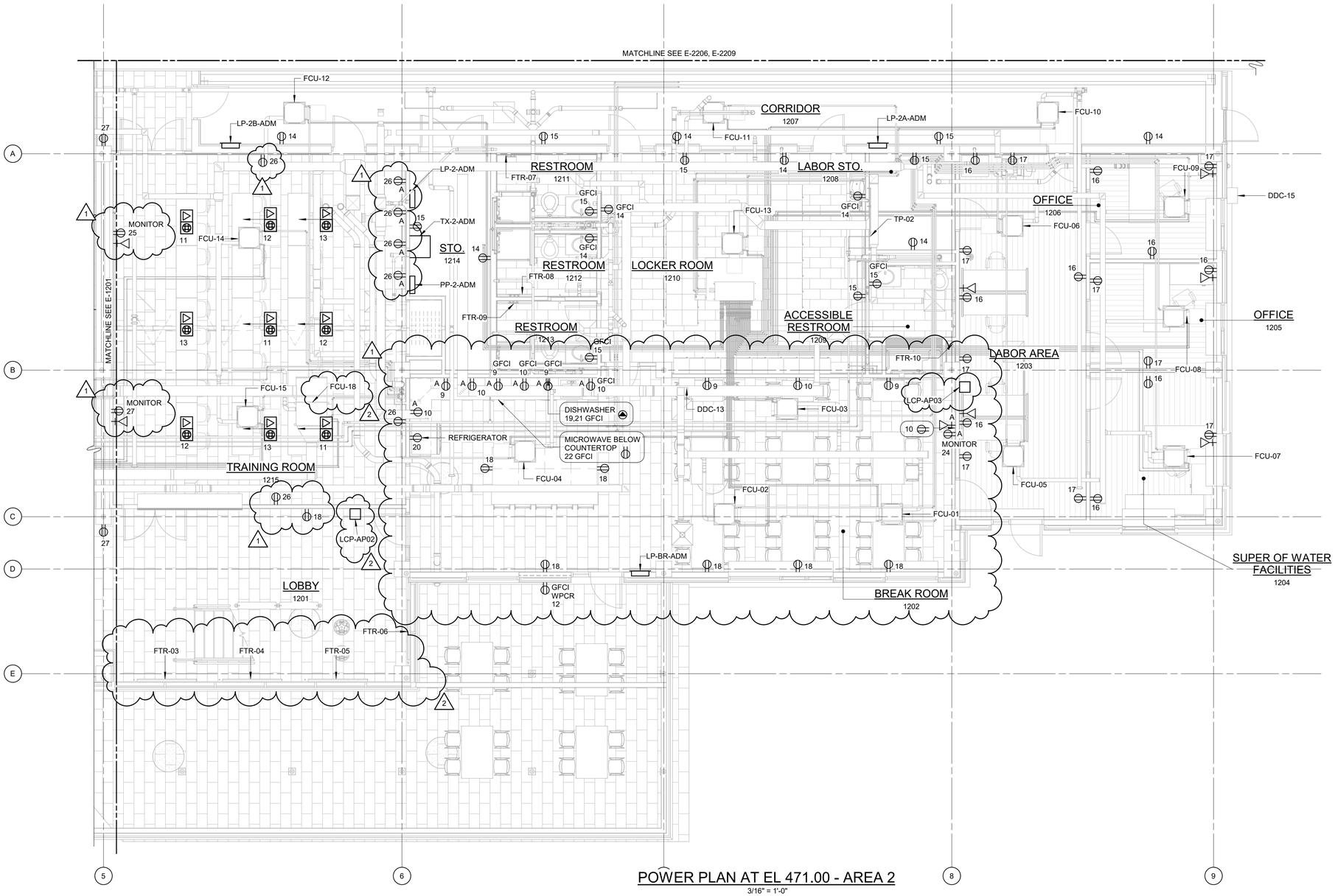

POWER PLAN AT EL 471.00 - AREA 2

3/16" = 1'-0"

NOTES:

1. RECEPTACLES ON THIS SHEET SHALL BE POWERED BY LP-BR-ADM.

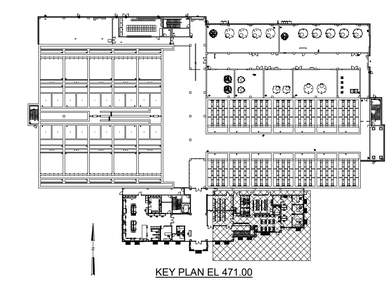

KEY PLAN EL 471.00

3/16" = 1'-0"

REV	ISSUED FOR	DATE	BY
2	ADDENDUM NO. 5	APR 24	MWM
1	ADDENDUM NO. 3	MAR 24	MWM
0	ISSUED FOR BIDS	FEB 24	MWM

PROJECT ENGINEER: K. BARRETT
DESIGNED BY: A. PENA/D. SHAH
DRAWN BY: A. PENA/D. SHAH
CHECKED BY: G. MARKOU

IF THIS BAR DOES NOT MEASURE 1" THEN DRAWING IS NOT TO FULL SCALE

COMMONWEALTH OF MASSACHUSETTS
GEORGE MARKOU
ELECTRICAL
No. 50726
REGISTERED PROFESSIONAL ENGINEER
04/22/2024

Hazen

HAZEN AND SAWYER
100 GREAT MEADOW ROAD, SUITE 702
WETHERSFIELD, CT 06109

SPRINGFIELD WATER AND SEWER COMMISSION

WEST PARISH WATER TREATMENT PLANT

FILED SUB-BID

WATER TREATMENT BUILDING
ELECTRICAL
POWER PLAN AT EL 471.00 - ADMINISTRATON AREA 2

DATE: FEBRUARY 2024
HAZEN NO.: 90398-004
CONTRACT NO.: 24-51
DRAWING NUMBER: E-1202

Autodesk Docs://90398-004_West Parish Filter WTF/90398-004-ADM-E.rvt
4/21/2024 1:10:44 PM

NOTES:

1. MOUNT FIXTURE TYPE "LP1" 12'-0" AFF.

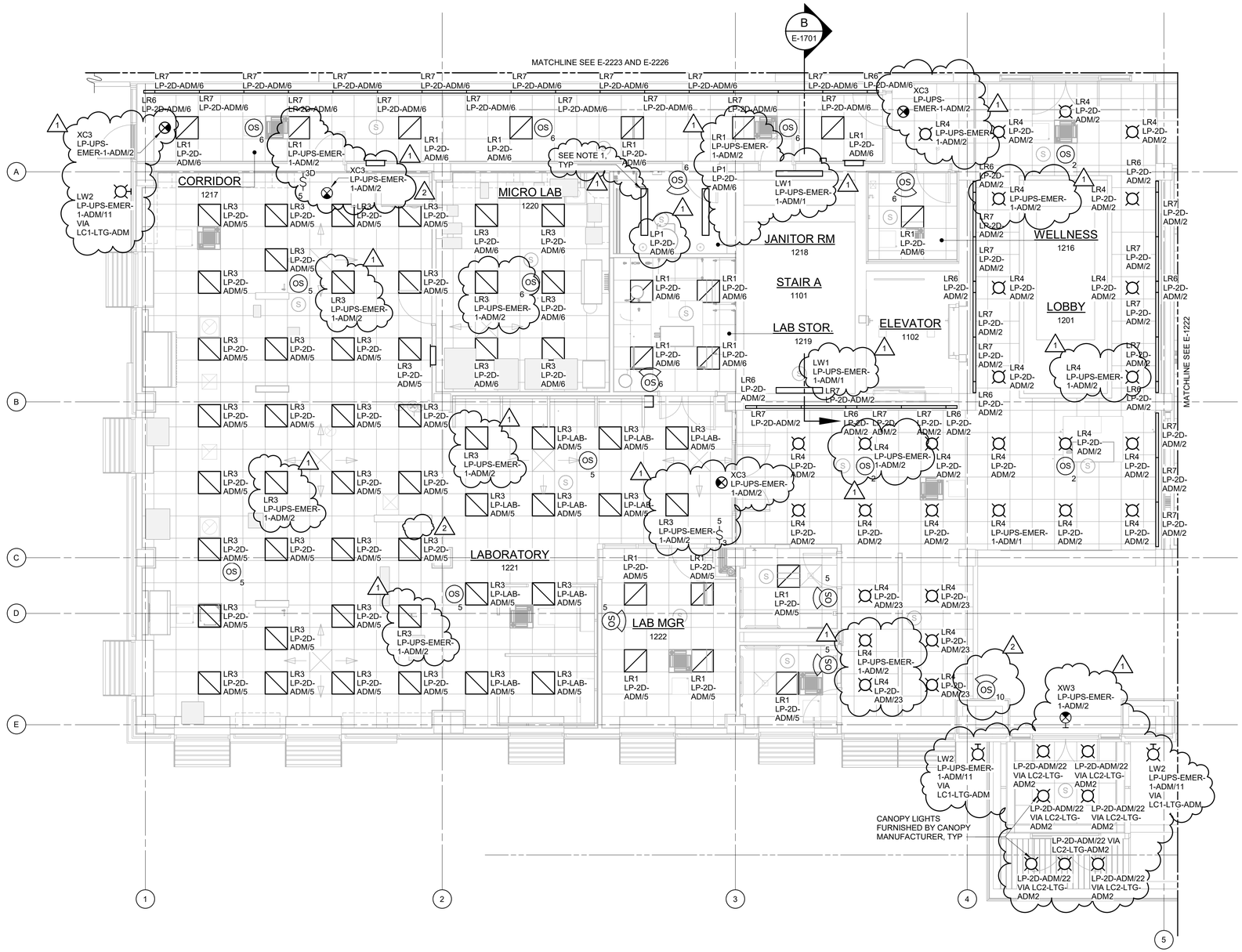

LIGHTING PLAN AT EL 471.00 - AREA 1

3/16" = 1'-0"

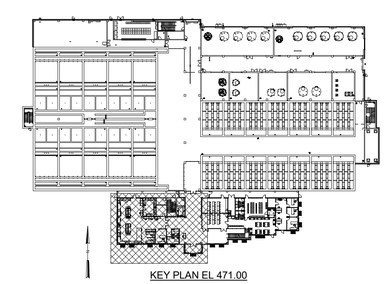

KEY PLAN EL 471.00

3/16" = 1'-0"

REV	ISSUED FOR	DATE	BY
2	ADDENDUM NO. 5	APR 24	MWM
1	ADDENDUM NO. 3	MAR 24	MWM
0	ISSUED FOR BIDS	FEB 24	MWM

PROJECT ENGINEER:	K. BARRETT
DESIGNED BY:	A. PENA/D. SHAH
DRAWN BY:	A. PENA/D. SHAH
CHECKED BY:	G. MARKOU

IF THIS BAR DOES NOT MEASURE 1" THEN DRAWING IS NOT TO FULL SCALE 0 1/2" 1"

COMMONWEALTH OF MASSACHUSETTS GEORGE MARKOU ELECTRICAL No. 50726 REGISTERED PROFESSIONAL ENGINEER

04/22/2024

Hazen

HAZEN AND SAWYER
100 GREAT MEADOW ROAD, SUITE 702
WETHERSFIELD, CT 06109

SPRINGFIELD WATER AND SEWER COMMISSION

WEST PARISH WATER TREATMENT PLANT

FILED SUB-BID

WATER TREATMENT BUILDING
ELECTRICAL
LIGHTING PLAN AT EL 471.00 - ADMINISTRATION AREA 1

DATE:	FEBRUARY 2024
HAZEN NO.:	90398-004
CONTRACT NO.:	24-51
DRAWING NUMBER:	E-1221

Autodesk Docs://90398-004_West Parish Filter WTF/90398-004-ADM-E.rvt
4/17/2024 12:53:02 PM

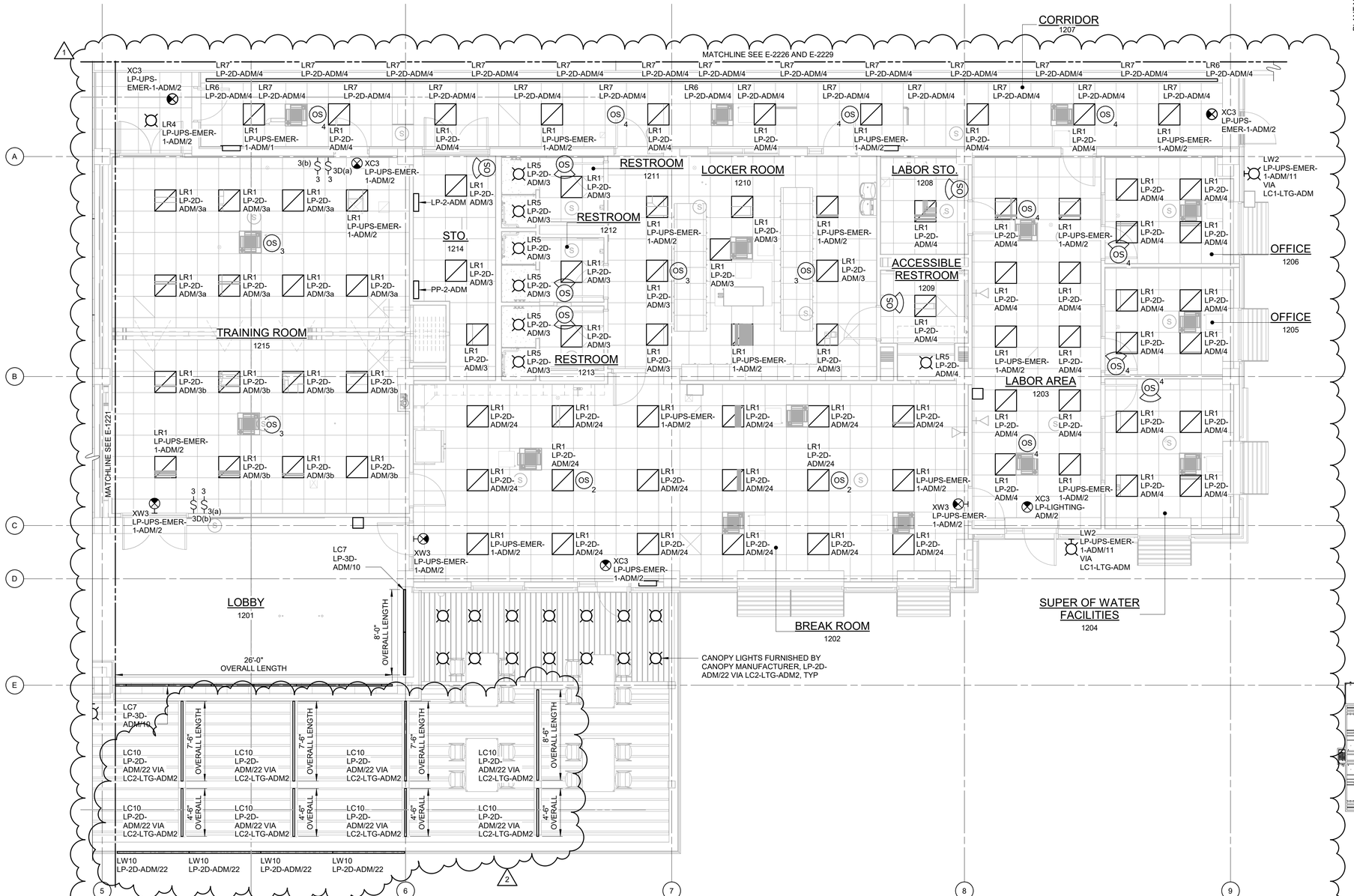

LIGHTING PLAN AT EL 471.00 - AREA 2

3/16" = 1'-0"

3/16" = 1'-0"

REV	ISSUED FOR	DATE	BY
2	ADDENDUM NO. 5	APR 24	MWM
1	ADDENDUM NO. 3	MAR 24	MWM
0	ISSUED FOR BIDS	FEB 24	MWM

PROJECT ENGINEER:	K. BARRETT
DESIGNED BY:	A. PENA/D. SHAH
DRAWN BY:	A. PENA/D. SHAH
CHECKED BY:	G. MARKOU

IF THIS BAR DOES NOT MEASURE 1" THEN DRAWING IS NOT TO FULL SCALE 0 1/2" 1"

COMMONWEALTH OF MASSACHUSETTS GEORGE MARKOU ELECTRICAL No. 50726 REGISTERED PROFESSIONAL ENGINEER

04/22/2024

Hazen

HAZEN AND SAWYER
100 GREAT MEADOW ROAD, SUITE 702
WETHERSFIELD, CT 06109

SPRINGFIELD WATER AND SEWER COMMISSION

WEST PARISH WATER TREATMENT PLANT

FILED SUB-BID

WATER TREATMENT BUILDING
ELECTRICAL
LIGHTING PLAN AT EL 471.00 - ADMINISTRATON AREA 2

DATE:	FEBRUARY 2024
HAZEN NO.:	90398-004
CONTRACT NO.:	24-51
DRAWING NUMBER:	E-1222

Autodesk Docs://90398-004_West Parish Filter WTF/90398-004-ADM-E.rvt
4/17/2024 11:06:57 AM

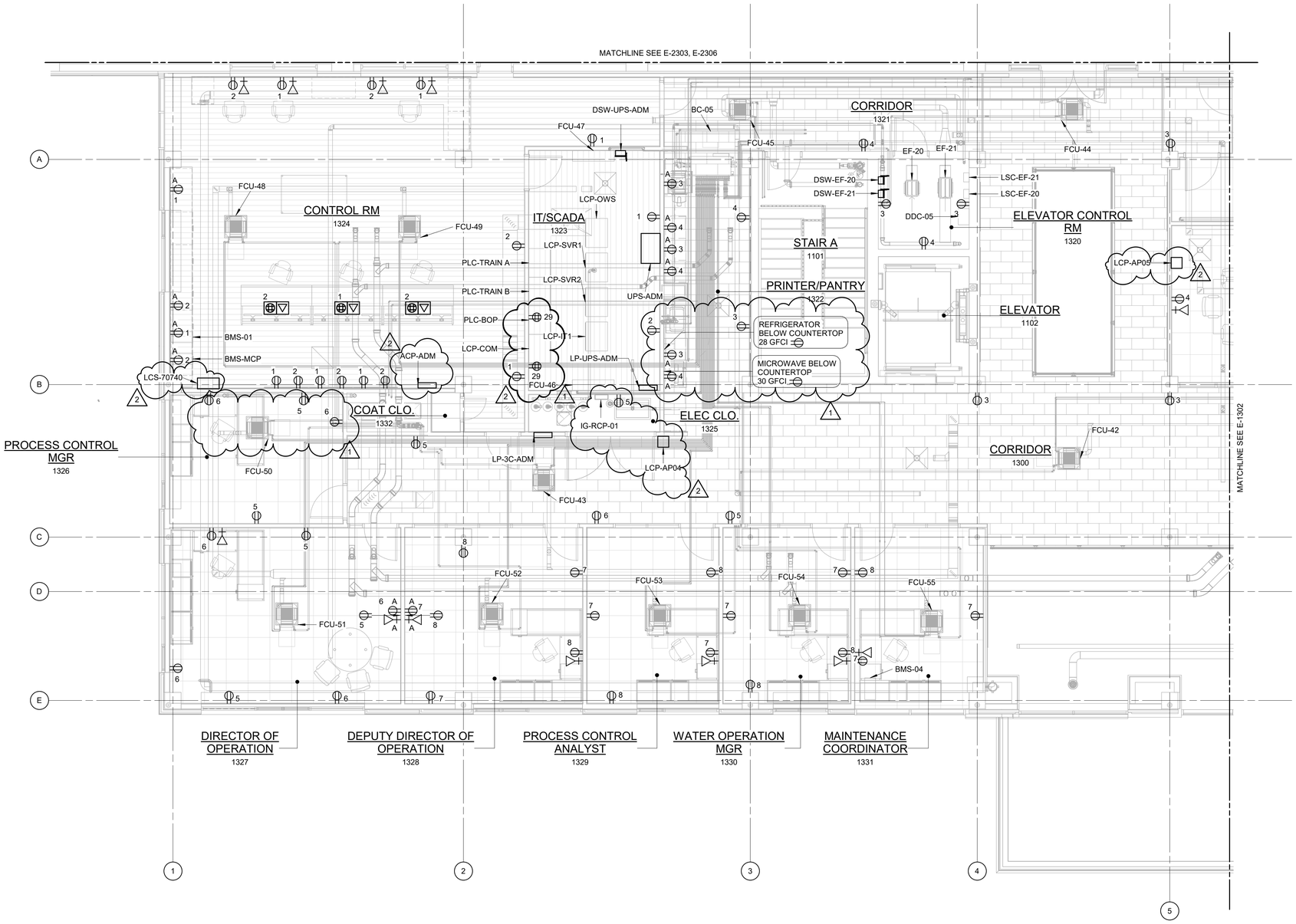

POWER PLAN AT EL 485.00 - AREA 1

3/16" = 1'-0"

PLANT NORTH

N

NOTES:

1. RECEPTACLES ON SHEET SHALL BE POWERED BY LP-3D-ADM.

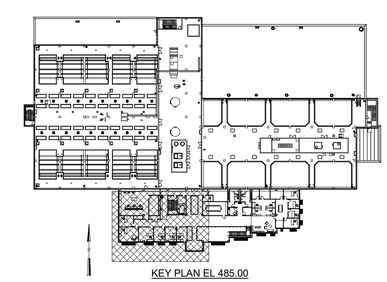

KEY PLAN EL 485.00

3/16" = 1'-0"

6 4 2 0 5'

REV	ISSUED FOR	DATE	BY
2	ADDENDUM NO. 5	APR 24	MWM
1	ADDENDUM NO. 3	MAR 24	MWM
0	ISSUED FOR BIDS	FEB 24	MWM

PROJECT ENGINEER:	K. BARRETT
DESIGNED BY:	A. PENA/D. SHAH
DRAWN BY:	A. PENA/D. SHAH
CHECKED BY:	G. MARKOU

IF THIS BAR DOES NOT MEASURE 1" THEN DRAWING IS NOT TO FULL SCALE 0 1/2" 1"

COMMONWEALTH OF MASSACHUSETTS
GEORGE MARKOU
ELECTRICAL
No. 50726
REGISTERED PROFESSIONAL ENGINEER

04/22/2024

Hazen

HAZEN AND SAWYER
100 GREAT MEADOW ROAD, SUITE 702
WETHERSFIELD, CT 06109

SPRINGFIELD WATER AND SEWER COMMISSION

WEST PARISH WATER TREATMENT PLANT

FILED SUB-BID

WATER TREATMENT BUILDING
ELECTRICAL
POWER PLAN AT EL 485.00 - ADMINISTRATION AREA 1

DATE:	FEBRUARY 2024
HAZEN NO.:	90398-004
CONTRACT NO.:	24-51
DRAWING NUMBER:	E-1301

Autodesk Docs://90398-004_West Parish Filter WTF/90398-004-ADM-E.rvt
4/21/2024 2:42:58 PM

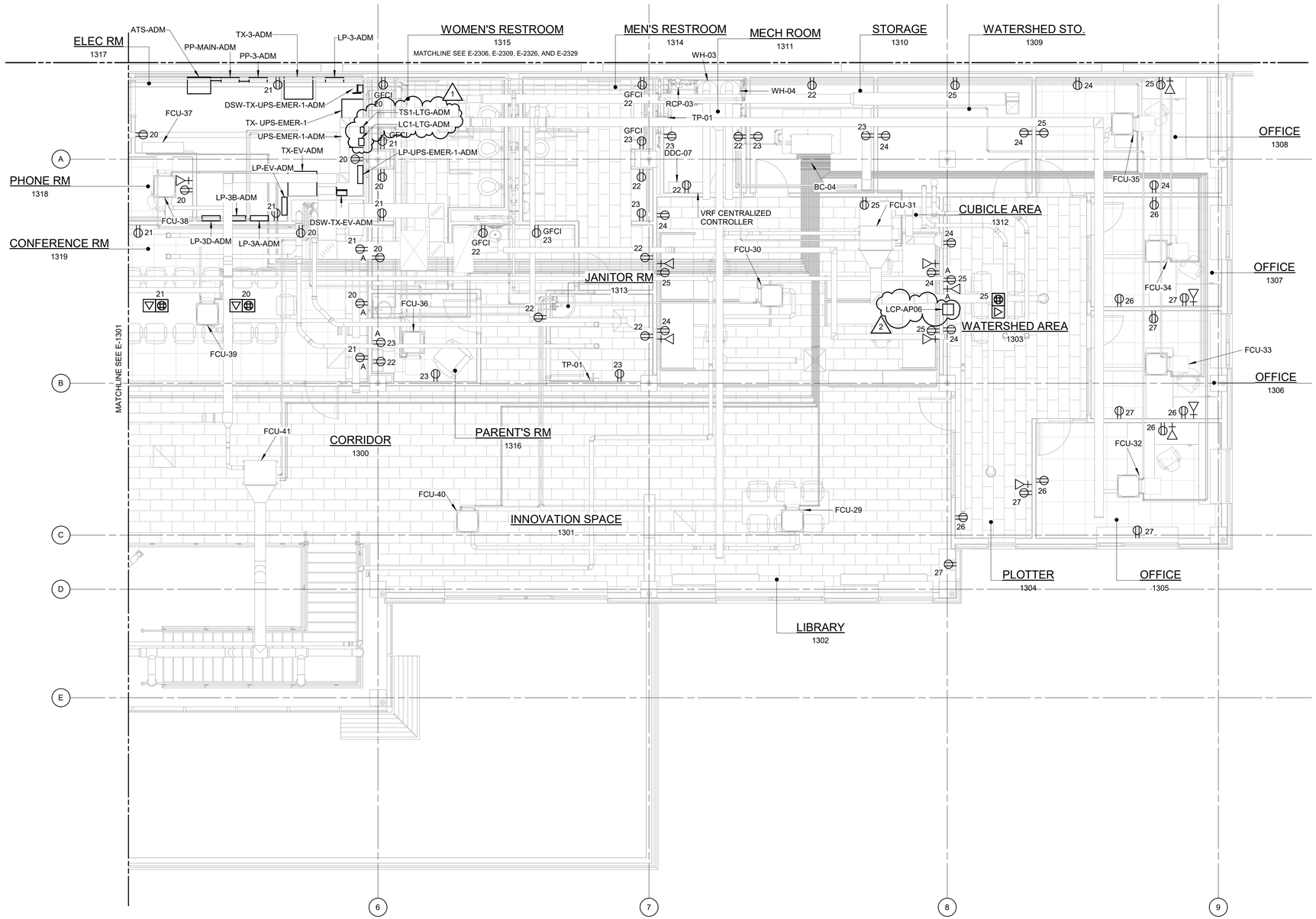

POWER PLAN AT 485.00 - AREA 2

3/16" = 1'-0"

PLANT NORTH

N

NOTES:

1. RECEPTACLES ON SHEET SHALL BE POWERED BY LP-3D-ADM.

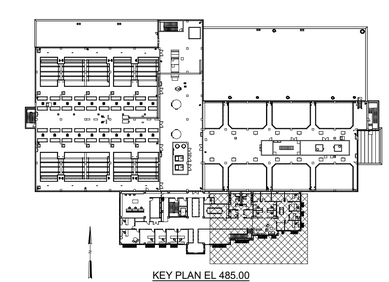

KEY PLAN EL 485.00

3/16" = 1'-0"

6 4 2 0 5'

REV	ISSUED FOR	DATE	BY
2	ADDENDUM NO. 5	APR 24	MWM
1	ADDENDUM NO. 3	MAR 24	MWM
0	ISSUED FOR BIDS	FEB 24	MWM

PROJECT ENGINEER:	K. BARRETT
DESIGNED BY:	A. PENA/D. SHAH
DRAWN BY:	A. PENA/D. SHAH
CHECKED BY:	G. MARKOU

IF THIS BAR DOES NOT MEASURE 1" THEN DRAWING IS NOT TO FULL SCALE 0 1/2" 1"

COMMONWEALTH OF MASSACHUSETTS
GEORGE MARKOU
ELECTRICAL
No. 50726
REGISTERED PROFESSIONAL ENGINEER
04/22/2024

Hazen

HAZEN AND SAWYER
100 GREAT MEADOW ROAD, SUITE 702
WETHERSFIELD, CT 06109

SPRINGFIELD WATER AND SEWER COMMISSION

WEST PARISH WATER TREATMENT PLANT

FILED SUB-BID

WATER TREATMENT BUILDING
ELECTRICAL
POWER PLAN AT EL 485.00 - ADMINISTRATION AREA 2

DATE:	FEBRUARY 2024
HAZEN NO.:	90398-004
CONTRACT NO.:	24-51
DRAWING NUMBER:	E-1302

Autodesk Docs://90398-004_West Parish Filter WTF/90398-004-ADM-E.rvt
4/21/2024 1:10:57 PM

#NAME?
3 PHASE, 3 WIRE
65 kAIC

POWER PANEL PP-MAIN-ADM
MAIN BREAKER : 800A 3P
PANEL RATING : 800A 3P

TYPE: NEMA 12
MOUNT: SURFACE
LOCATION: ADMIN BLDG. ELECT RM 1317

DESCRIPTION	TRIP	POLE	CKT No.	KILO-VOLT-AMPERES A	B	C	KILO-VOLT-AMPERES A	B	C	CKT No.	POLE	TRIP	DESCRIPTION
PP-1-ADM	200	3	1	19.00			38.50			2	3	200	PP-2-ADM
			3		19.00			38.50		4			
			5			19.00			38.50	6			
PP-3-ADM	600	3	7	104.00			6.80			8	3	100	UPS-ADM - LP-UPS-ADM
			9		104.00			6.80		10			
			11			104.00			6.80	12			
UPS-EMER-1-ADM - LP-UPS-EMER-1-ADM	100	3	13	4.34			16.64			14	3	250	LP-EV-ADM
			15		4.34			16.64		16			
			17			4.34			16.64	18			
SPARE	20	3	19	0.00			0.00			20	3	20	SPARE
			21		0.00			0.00		22			
			23			0.00			0.00	24			
SPARE	20	3	25	0.00			0.00			26	3	20	SPARE
			27		0.00			0.00		28			
			29			0.00			0.00	30			
SPARE	20	3	31	0.00			0.00			32	3	20	SPARE
			33		0.00			0.00		34			
			35			0.00			0.00	36			
SPARE	20	3	37	0.00			0.00			38	3	20	SPARE
			39		0.00			0.00		40			
			41			0.00			0.00	42			
			TOTAL	127.3	127.3	127.3	61.9	61.9	61.9	TOTAL			
				PHASE TOTAL			TOTAL LOAD (KVA)						
				189.3	189.3	189.3	567.8						
							TOTAL LOAD (A)						
							683.0						

NOTES:
65kAIC

480 VOLTS, 60 HZ
3 PHASE, 3 WIRE
42 kAIC

POWER PANEL PP-1-ADM
MAIN BREAKER : 200A 3P
PANEL RATING : 200A 3P

TYPE: NEMA 12
MOUNT: SURFACE
LOCATION: ADMIN BLDG. MECH RM 1103

DESCRIPTION	TRIP	POLE	CKT No.	KILO-VOLT-AMPERES A	B	C	KILO-VOLT-AMPERES A	B	C	CKT No.	POLE	TRIP	DESCRIPTION
CWP-01 (Free Cooling Pump 1)	30	3	1	5.80			0.00			2	3	30	CWP-02 (Free Cooling Pump 2) (STANDBY)
			3		5.80			0.00		4			
			5			5.80			0.00	6			
TX-1A-ADM - LP-1A-ADM	30	3	7	4.34			0.20			8	3	20	SP-01 (ELEVATOR SUMP)
			9		4.34			0.20		10			
			11			4.34			0.20	12			
EUH-53	20	3	13	1.10			7.50			14	3	40	ELEVATOR
			15		1.10			7.50		16			
			17			1.10			7.50	18			
SPARE	20	3	19	0.00			0.00			20	3	30	SPARE
			21		0.00			0.00		22			
			23			0.00			0.00	24			
SPARE	20	3	25	0.00			0.00			26	3	20	SPARE
			27		0.00			0.00		28			
			29			0.00			0.00	30			
SPARE	20	3	31	0.00			0.00			32	3	20	SPARE
			33		0.00			0.00		34			
			35			0.00			0.00	36			
SPARE	20	3	37	0.00			0.00			38	3	20	SPARE
			39		0.00			0.00		40			
			41			0.00			0.00	42			
			TOTAL	11.2	11.2	11.2	7.7	7.7	7.7	TOTAL			
				PHASE TOTAL			TOTAL LOAD (KVA)						
				18.9	18.9	18.9	56.8						
							TOTAL LOAD (A)						
							68.3						

480 VOLTS, 60 HZ
3 PHASE, 3 WIRE
42 kAIC

POWER PANEL PP-2-ADM
MAIN BREAKER : 200A 3P
PANEL RATING : 200A 3P

TYPE: NEMA 12
MOUNT: SURFACE
LOCATION: ADMIN BLDG. STO. 1214

DESCRIPTION	TRIP	POLE	CKT No.	KILO-VOLT-AMPERES A	B	C	KILO-VOLT-AMPERES A	B	C	CKT No.	POLE	TRIP	DESCRIPTION
WH-01	30	3	1	4.10			4.10			2	3	30	WH-02
			3		4.10			4.10		4			
			5			4.10			4.10	6			
TX-2-ADM - LP-2-ADM	150	3	7	30.30			0.00			8	3	20	SPARE
			9		30.30			0.00		10			
			11			30.30			0.00	12			
SPARE	20	3	13	0.00			0.00			14	3	20	SPARE
			15		0.00			0.00		16			
			17			0.00			0.00	18			
SPARE	20	3	19	0.00			0.00			20	3	30	SPARE
			21		0.00			0.00		22			
			23			0.00			0.00	24			
SPARE	20	3	25	0.00			0.00			26	3	20	SPARE
			27		0.00			0.00		28			
			29			0.00			0.00	30			
SPARE	20	3	31	0.00			0.00			32	3	20	SPARE
			33		0.00			0.00		34			
			35			0.00			0.00	36			
SPARE	20	3	37	0.00			0.00			38	3	20	SPARE
			39		0.00			0.00		40			
			41			0.00			0.00	42			
			TOTAL	34.4	34.4	34.4	4.1	4.1	4.1	TOTAL			
				PHASE TOTAL			TOTAL LOAD (KVA)						
				38.5	38.5	38.5	115.5						
							TOTAL LOAD (A)						
							138.9						

480 VOLTS, 60 HZ
3 PHASE, 3 WIRE
42 kAIC

POWER PANEL PP-3-ADM
MAIN BREAKER : 600A 3P
PANEL RATING : 600A 3P

TYPE: NEMA 12
MOUNT: SURFACE
LOCATION: ADMIN BLDG. ELECT RM 1317

DESCRIPTION	TRIP	POLE	CKT No.	KILO-VOLT-AMPERES A	B	C	KILO-VOLT-AMPERES A	B	C	CKT No.	POLE	TRIP	DESCRIPTION
VRF-01	40	3	1	5.83			5.53			2	3	30	VRF-02
			3		5.83			5.53		4			
			5			5.83			5.53	6			
VRF-03	30	3	7	5.53			5.83			8	3	40	VRF-04
			9		5.53			5.83		10			
			11			5.53			5.83	12			
VRF-05	50	3	13	9.40			23.43			14	3	110	DOAS-01
			15		9.40			23.43		16			
			17			9.40			23.43	18			
DOAS-02	110	3	25	24.90			23.50			20	3	125	TX-3-ADM - LP-3-ADM
			27		24.90			23.50		22			
			29			24.90			23.50	24			
EF-19	20	3	31	0.33			0.00			32	3	20	SPARE
			33		0.33			0.00		34			
			35			0.33			0.00	36			
SPARE	20	3	37	0.00			0.00			38	3	20	SPARE
			39		0.00			0.00		40			
			41			0.00			0.00	42			
SPARE	20	3	37	0.00			0.00			38	3	20	SPARE
			39		0.00			0.00		40			
			41			0.00			0.00	42			
			TOTAL	46.0	46.0	46.0	58.3	58.3	58.3	TOTAL			
				PHASE TOTAL			TOTAL LOAD (KVA)						
				104.3	104.3	104.3	312.8						
							TOTAL LOAD (A)						
							376.3						

#NAME?
3-PHASE, 4-WIRE
22 kAIC

PANEL NAME: LP-1A-ADM
MAIN BREAKER : 100A P
PANEL RATING : 100A

TYPE: NEMA 12
MOUNT: SURFACE
LOCATION: ADMIN MECH RM 1103

DESCRIPTION	TRIP	POLE	CKT No.	KILO-VOLT-AMPERES A	B	C	KILO-VOLT-AMPERES A	B	C	CKT No.	POLE	TRIP	DESCRIPTION
EWH-01	20	2	1	1.00			1.00			2	2	20	EWH-02
			3		1.00			1.00		4			
GMU-01	20	1	5			1.70			0.12	6	1	20	LCS-CWP-01
DDC-11	20	1	7	1.20			0.12			8	1	20	LCS-CWP-02
ELEVATOR F/A CONTROLLER	30	1	9		0.50			0.90		10	1	20	GATE #2
GATE #3	20	1	11			0.90			0.90	12			
			13	0.90			0.90			14	1	20	GATE #4
SPARE	20	1	15		0.00			0.90		16			
SPARE	20	1	17			0.00			0.00	18	1	20	SPARE
SPARE	20	1	19	0.00			0.00			20	1	20	SPARE
SPARE	20	1	21		0.00			0.00		22	1	20	SPARE
SPARE	20	1	23			0.00			0.00	24	1	20	SPARE
SPARE	20	1	25	0.00			0.00			26	1	20	SPARE
SPARE	20	1	27		0.00			0.00		28	1	20	SPARE
SPARE	20	1	29			0.00			0.00	30	1	20	SPARE
SPARE	20	1	31	0.00			0.00			32	1	20	SPARE
SPARE	20	1	33		0.00			0.00		34	1	20	SPARE
SPARE	20	1	35			0.00			0.00	36	1	20	SPARE
SPARE	20	1	37	0.00			0.00			38	1	20	SPARE
SPARE	20	1	39		0.00			0.00		40	1	20	SPARE
SPARE	20	1	41			0.00			0.00	42	1	20	SPARE
			TOTAL	3.10	1.50	2.60	2.02	2.80	1.02	TOTAL			
				PHASE TOTAL (KVA)			TOTAL LOAD (KVA)						
				5.12	4.30	3.62	13.04						
				PHASE TOTAL (A)			TOTAL LOAD (A)						
				42.67	35.83	30.17	36.20						

208/120 VOLTS
3-PHASE, 4-WIRE
22 kAIC

PANEL NAME: LP-2-ADM
MAIN BREAKER : 400A P
PANEL RATING : 400A

TYPE: NEMA 12
MOUNT: SURFACE
LOCATION: ADMIN STO. 1214

DESCRIPTION	TRIP	POLE	CKT No.	KILO-VOLT-AMPERES A	B	C	KILO-VOLT-AMPERES A	B	C	CKT No.	POLE	TRIP	DESCRIPTION
LP-2A-ADM	100	3	1	1.18			2.44			2	3	100	LP-2B-ADM
			3		1.18			2.44		4			
			5			1.18			2.44	6			
LP-2C-ADM	100	3	7	2.53			7.58			8	3	100	LP-BR-ADM
			9		2.53			7.58		10			
			11			2.53			7.58	12			
LP-LAB-ADM	150	3	13	9.57			7.00			14	1	100	LP-2D-ADM
			15		9.57			7.00		16			
			17			9.57			7.00	18			
SPARE	20	1	19	0.00			0.00			20	1	20	SPARE
SPARE	20	1	21		0.00			0.00		22	1	20	SPARE
SPARE	20	1	23			0.00			0.00	24	1	20	SPARE
SPARE	20	1	25	0.00			0.00			26	1	20	SPARE
SPARE	20	1	27		0.00			0.00		28	1	20	SPARE
SPARE	20	1	29			0.00			0.00	30	1	20	SPARE
SPARE	20	1	31	0.00			0.00			32	1	20	SPARE
SPARE	20	1	33		0.00			0.00		34	1	20	SPARE
SPARE	20	1	35			0.00			0.00	36	1	20	SPARE
SPARE	20	1	37	0.00			0.00			38	1	20	SPARE
SPARE	20	1	39		0.00			0.00		40	1	20	SPARE
SPARE	20	1	41			0.00			0.00	42	1	20	SPARE
			TOTAL	13.28	13.28	13.28	17.02	17.02	17.02	TOTAL			
				PHASE TOTAL (KVA)			TOTAL LOAD (KVA)						
				30.30	30.30	30.30	90.90						
				PHASE TOTAL (A)			TOTAL LOAD (A)						
				252.50	252.50	252.50	252.31						

208/120 VOLTS
3-PHASE, 4-WIRE
22 kAIC

PANEL NAME: LP-2A-ADM
MAIN BREAKER : 100A P
PANEL RATING : 100A

TYPE: NEMA 12
MOUNT: FLUSH
LOCATION: ADM CORR. 1207

DESCRIPTION	TRIP	POLE	CKT No.	KILO-VOLT-AMPERES A	B	C	KILO-VOLT-AMPERES A	B	C	CKT No.	POLE	TRIP	DESCRIPTION
BC-01	20	2	1	0.07			0.30			2	2	20	FTR-07
			3		0.07			0.30		4			
FTR-08	20	2	5			0.30			0.30	6	2	20	FTR-09
			7	0.30			0.30			8			
FTR-10	20	2	9		0.30			0.00		10	2	20	SPARE
			11			0.30			0.00	12			
FCU-05	20	2	13	0.05			0.05			14	2	20	FCU-06
			15		0.05			0.05		16			
FCU-07	20	2	17			0.05			0.05	18	2	20	FCU-08
			19	0.05			0.05			20			
FCU-09	20	2	21		0.05			0.05		22	2	20	FCU-10
			23			0.05			0.05	24			
FCU-11	20	2	25	0.05			0.05			26	2	20	FCU-12
			27		0.05			0.05		28			
FCU-13	20	2	29			0.05			0.10	30	1	20	TP-02 (ROOM 1208)
			31	0.05			0.00			32	1	20	SPARE
SPARE	20	1	33		0.00			0.00		34	1	20	SPARE
SPARE	20	1	35			0.00			0.00	36	1	20	SPARE
SPARE	20	1	37	0.00			0.00			38	1	20	SPARE
SPARE	20	1	39		0.00			0.00		40	1	20	SPARE
SPARE	20	1	41			0.00			0.00	42	1	20	SPARE
			TOTAL	0.57	0.52	0.75	0.75	0.45	0.50	TOTAL			
				PHASE TOTAL (KVA)			TOTAL LOAD (KVA)						
				1.32	0.97	1.25	3.54						
				PHASE TOTAL (A)			TOTAL LOAD (A)						
				11.00	8.08	10.42	9.83						

208/120 VOLTS
3-PHASE, 4-WIRE
22 kAIC

PANEL NAME: LP-2B-ADM
MAIN BREAKER : 100A P
PANEL RATING : 100A

TYPE: NEMA 12
MOUNT: FLUSH
LOCATION: ADMIN CORR. 1207

DESCRIPTION	TRIP	POLE	CKT No.	KILO-VOLT-AMPERES A	B	C	KILO-VOLT-AMPERES A	B	C	CKT No.	POLE	TRIP	DESCRIPTION
BC-02	20	2	1	0.07			0.30			2	2	20	FTR-01
			3		0.07			0.30		4			
FTR-02	20	2	5			0.30			0.75	6	2	20	FTR-03
			7	0.30			0.75			8			
FTR-04	20	2	9		0.75			0.75		10	2	20	FTR-05
			11			0.75			0.05	12			
FTR-06	20	2	13	0.75			0.05			14	2	20	FCU-14
			15		0.75			0.05		16			
FCU-15	20	2	17			0.05			0.05	18	2	20	FCU-16
			19	0.05			0.05			20			
SPARE	20	2	21		0.00			0.05		22	2	20	FCU-18
			23			0.00			0.05	24			
FCU-19	20	2	25	0.05			0.05			26	2	20	FCU-20
			27		0.05			0.05		28			
FCU-23	20	1	29			0.05			0.00	30	1	20	SPARE
			31	0.05			0.00			32	1	20	SPARE
SPARE	20	1	33		0.00			0.00		34	1	20	SPARE
SPARE	20	1	35			0.00			0.00	36	1	20	SPARE
SPARE	20	1	37	0.00			0.00			38	1	20	SPARE
SPARE	20	1	39		0.00			0.00		40	1	20	SPARE
SPARE	20	1	41			0.00			0.00	42	1	20	SPARE
			TOTAL	1.27	1.62	1.15	1.20	1.20	0.90	TOTAL			
				PHASE TOTAL (KVA)			TOTAL LOAD (KVA)						
				2.47	2.82	2.05	7.34						
				PHASE TOTAL (A)			TOTAL LOAD (A)						
				20.58	23.50	17.08	20.37						

208/120 VOLTS
3-PHASE, 4-WIRE
22 kAIC

PANEL NAME: LP-2C-ADM
MAIN BREAKER : 100A P
PANEL RATING : 100A

TYPE: NEMA 12
MOUNT: FLUSH
LOCATION: ADM CORR. 1217

DESCRIPTION	TRIP	POLE	CKT No.	KILO-VOLT-AMPERES A	B	C	KILO-VOLT-AMPERES A	B	C	CKT No.	POLE	TRIP	DESCRIPTION
FCU-21	20	2	1	0.05			0.05			2	2	20	FCU-22
			3		0.05			0.05		4			
WPS-01	30	1	5			2.50			0.10	6	2	20	TP-01 (ROOM 1218)
RCP-01	20	1	7	0.70			0.00			8			SPARE
BC-03	20	2	9		0.07			1.20		10	1	20	DDC-13
			11			0.07			0.05	12	2	20	FCU-25
DDC-15	20	1	13	1.20			0.05			14			
RCP-02	20	1	15		0.70			0.05		16	2	20	FCU-27
LCP-AP01	20	1	17			0.12			0.05	18			
LCP-AP02	20	1	19	0.12			0.12			20	1	20	LCP-AP03
FCU-24	20	1	21		0.05			0.00		22	1	20	SPARE
	20	1	23			0.05			0.00	24	1	20	SPARE
FCU-26	20	1	25	0.05			0.00			26	1	20	SPARE
	20	1	27		0.05			0.00		28	1	20	SPARE
FCU-28	20	1	29			0.05			0.00	30	1	20	SPARE
	20	1	31	0.05			0.00			32	1	20	SPARE
SPARE	20	1	33		0.00			0.00		34	1	20	SPARE
SPARE	20	1	35			0.00			0.00	36	1	20	SPARE
SPARE	20	1	37	0.00			0.00			38	1	20	SPARE
SPARE	20	1	39		0.00			0.00		40	1	20	SPARE
SPARE	20	1	41			0.00			0.00	42	1	20	SPARE
			TOTAL	2.17	0.92	2.79	0.22	1.30	0.20	TOTAL			
				PHASE TOTAL (KVA)			TOTAL LOAD (KVA)						
				2.39	2.22	2.99	7.60						
				PHASE TOTAL (A)			TOTAL LOAD (A)						
				19.92	18.50	24.92	21.10						

1 2

REV	ISSUED FOR	DATE	BY
2	ADDENDUM NO. 5	APR 24	MWM
1	ADDENDUM NO. 3	MAR 24	MWM
0	ISSUED FOR BIDS	FEB 24	MWM

PROJECT ENGINEER: K. BARRETT
DESIGNED BY: A. PENA / D. SHAH
DRAWN BY: A. PENA / D. SHAH
CHECKED BY: G. MARKOU

IF THIS BAR DOES NOT MEASURE 1" THEN DRAWING IS NOT TO FULL SCALE
0 1/2" 1"

COMMONWEALTH OF MASSACHUSETTS
GEORGE MARKOU
ELECTRICAL
No. 50726
REGISTERED PROFESSIONAL ENGINEER
04/22/2024

Hazen
HAZEN AND SAWYER
100 GREAT MEADOW ROAD, SUITE 702
WETHERSFIELD, CT 06109

SPRINGFIELD WATER AND SEWER COMMISSION

WEST PARISH WATER TREATMENT PLANT

FILED SUB-BID

WATER TREATMENT BUILDING
ELECTRICAL
PANEL BOARD SCHEDULES - ADMINISTRATION AREA SHEET 1

DATE: FEBRUARY 2024
HAZEN NO.: 90398-004
CONTRACT NO.: 24-51
DRAWING NUMBER: E-1803

File: C:\USERS\DKOLOKATHIS\DC\ACCDOCS\HAZEN AND SAWYER\90398-004_WEST PARISH FILTER WTP\PROJECT FILES\ELECE-1803 Saved by MDREN Save date: 4/22/2024 8:53 AM
PLOT DATE: 4/22/2024 9:42 AM BY: DKOLOKATHIS

208/120 VOLTS
3-PHASE, 4-WIRE
22 kAIC

PANEL NAME: LP-2D-ADM
MAIN BREAKER : 100A P
PANEL RATING : 100A

TYPE: NEMA 12
MOUNT: FLUSH
LOCATION: ADM CORR. 1217

DESCRIPTION	TRIP	POLE	CKT No.	KILO-VOLT-AMPERES A	B	C	KILO-VOLT-AMPERES A	B	C	CKT No.	POLE	TRIP	DESCRIPTION
ADM LTG - (1100, 1103)	20	1	1	0.35			0.70			2	1	20	ADM LTG - (1200, 1201, 1202)
ADM LTG - (1210, 1211, 1212, 1213, 1215)	20	1	3		0.50			0.80		4	1	20	ADM LTG - (1203, 1204, 1205, 1206, 1207, 1208, 1209)
ADM LTG - (1221, 1222, 1223, 1224)	20	1	5			1.25			0.63	6	1	20	ADM LTG - (1216, 1217, 1218, 1219, 1220)
ADM RECP - EL.457.00	20	1	7	0.54			0.54			8	1	20	ADM RECP - EL.457.00
OUTDOOR LTG - ADMIN SOUTH	20	2	9		0.34			0.34		10	2	20	OUTDOOR LTG - ADMIN SOUTH
			11			0.34			0.34	12			
OUTDOOR LTG - DWB	20	2	13	0.34			0.22			14	1	20	OUTDOOR LTG - LB1/LB2
			15		0.34			0.00		16	1	20	SPARE
ADM EAST RECP - EL.471.00	20	1	17			1.62			1.62	18	1	20	ADM EAST RECP - EL.471.00
ADM EAST RECP - EL.471.00	20	1	19	1.62			1.26			20	1	20	ADM EAST RECP - EL.471.00
ADM EAST RECP - EL.471.00	20	1	21		1.26			0.62		22	1	20	ADM LTG - (OUTSIDE CANOPY)
ADM LTG - (1201)	20	1	23			0.04			0.24	24	1	20	ADM LTG - BREAK ROOM 1202
ADM RECP - RECPT DSK.EL.457.00	20	1	25	0.75			0.00			26	1	20	SPARE
ADM WEST RECP - EL.471.00	20	1	27		1.08			0.00		28	1	20	SPARE
ADM RECP - LOBY DISPLAY EL.471	20	1	29			0.72			0.00	30	1	20	SPARE
ADM RECP - LOBY WALL EL.471	20	1	31	0.36			0.00			32	1	20	SPARE
ADM WEST RECP - EL.471.00	20	1	33		1.26			0.00		34	1	20	SPARE
ADM WEST RECP - EL.471.00	20	1	35			1.08			0.00	36	1	20	SPARE
SPARE	20	1	37	0.00			0.00			38	1	20	SPARE
SPARE	20	1	39		0.00			0.00		40	1	20	SPARE
SPARE	20	1	41			0.00			0.00	42	1	20	SPARE
			TOTAL	3.96	4.78	5.05	2.72	1.77	2.83	TOTAL			
				PHASE TOTAL (KVA)			TOTAL LOAD (KVA)						
				6.68	6.55	7.88	21.10						
				PHASE TOTAL (A)			TOTAL LOAD (A)						
				55.64	54.57	65.63	58.57						

208/120 VOLTS
3-PHASE, 4-WIRE
22 kAIC

PANEL NAME: LP-BR-ADM
MAIN BREAKER : 100A P
PANEL RATING : 100A

TYPE: NEMA 12
MOUNT: FLUSH
LOCATION: ADM BREAK RM 1202

DESCRIPTION	TRIP	POLE	CKT No.	KILO-VOLT-AMPERES A	B	C	KILO-VOLT-AMPERES A	B	C	CKT No.	POLE	TRIP	DESCRIPTION
FCU-01	20	2	1	0.05			0.05			2	2	20	FCU-02
			3		0.05			0.05		4			
FCU-03	20	2	5			0.05			0.05	6	2	20	FCU-04
			7	0.05			0.05			8			
RECP BREAK RM - EL.471.00	20	1	9		0.90			1.08		10	1	20	RECP BREAK RM - EL.471.00
TRAINING RM - EL.471.00	20	1	11			1.08			1.62	12	1	20	TRAINING RM - EL.471.00
TRAINING RM - EL.471.00	20	1	13	1.08			1.62			14	1	20	ADM EAST RECP - EL.471.00
ADM EAST RECP - EL.471.00	20	1	15		1.44			1.62		16	1	20	ADM EAST RECP - EL.471.00
ADM EAST RECP - EL.471.00	20	1	17			1.62			1.26	18	1	20	RECP BREAK RM - EL.471.00
RECP BREAK RM - DISHWASHER	30	2	19	2.40			1.00			20	1	20	RECP BREAK RM REFRIGERATOR
			21		2.40			1.00		22	1	20	RECP BREAK RM - MICROWAVE
TRAINING RM - EL.471.00	20	1	23			0.00			0.50	24	1	20	RECEP BREAK ROOM - MONITOR
RECEP TRAINING RM - MONITOR	20	1	25	0.50			1.26			26	1	20	TRAINING RM - EL.471.00
RECEP TRAINING RM - MONITOR	20	1	27		0.50			0.00		28	1	20	SPARE
SPARE	20	1	29			0.00			0.00	30	1	20	SPARE
SPARE	20	1	31	0.00			0.00			32	1	20	SPARE
SPARE	20	1	33		0.00			0.00		34	1	20	SPARE
SPARE	20	1	35			0.00			0.00	36	1	20	SPARE
SPARE	20	1	37	0.00			0.00			38	1	20	SPARE
SPARE	20	1	39		0.00			0.00		40	1	20	SPARE
SPARE	20	1	41			0.00			0.00	42	1	20	SPARE
			TOTAL	4.08	5.29	2.75	3.98	3.75	2.89	TOTAL			
				PHASE TOTAL (KVA)			TOTAL LOAD (KVA)						
				8.06	9.04	5.64	22.74						
				PHASE TOTAL (A)			TOTAL LOAD (A)						
				67.18	75.35	47.00	63.13						

208/120 VOLTS
3-PHASE, 4-WIRE
22 kAIC

PANEL NAME: LP-LAB-ADM
MAIN BREAKER : 150A P
PANEL RATING : 150A

TYPE: NEMA 12
MOUNT: FLUSH
LOCATION: ADM LAB. 1221

DESCRIPTION	TRIP	POLE	CKT No.	KILO-VOLT-AMPERES A	B	C	KILO-VOLT-AMPERES A	B	C	CKT No.	POLE	TRIP	DESCRIPTION
FS (ROOM 1221)	20	1	1	0.04			0.10			2	1	20	TP-01 (ROOM 1221)
SPARE	20	1	3		0.00			0.04		4	1	20	FS (ROOM 1220)
ADM LAB RECP - EL.471.00	20	1	5			1.08			0.12	6	1	20	FSH-70001
ADM LAB RECP - EL.471.00	20	1	7	1.08			1.50			8	1	20	FUME HOOD
ADM LAB RECP - EL.471.00	20	1	9		1.08			0.68		10	1	20	LAB REFRIGERATOR
ADM LAB RECP - EL.471.00	20	1	11			0.90			0.45	12	1	20	LAB REFRIGERATOR
ADM LAB RECP - EL.471.00	20	1	13	0.72			0.26			14	1	20	RH UNDR COUNTR LAB REFRIG
ADM LAB RECP - EL.471.00	20	1	15		0.90			0.00		16	1	20	SPARE
ADM LAB RECP - EL.471.00	20	1	17			0.90			0.90	18	1	20	ADM LAB RECP REG RACK- EL.471
ADM LAB RECP - EL.471.00	20	1	19	0.90			0.90			20	1	20	ADM LAB RECP REG RACK- EL.471
ADM LAB RECP - EL.471.00	20	1	21		1.08			0.72		22	1	20	ADM LAB RECP- EL.471.00
AUTOCLAVE	20	1	23			1.20			0.72	24	1	20	ADM LAB RECP REG RACK- EL.471
AUTOCLAVE	20	1	25	1.00			0.72			26	1	20	ADM LAB RECP REG RACK- EL.471
INCUBATOR	20	1	27		1.00			2.40		28	2	30	LAB DISHWASHER
INCUBATOR	20	1	29			1.00			2.40	30			
INCUBATOR	20	1	31	1.00			0.00			32	1	20	SPARE
DRYING OVEN	20	1	33		1.00			0.00		34	1	20	SPARE
DRYING OVEN	20	1	35			1.00			0.00	36	1	20	SPARE
UNDECOUNTER FREEZER	20	1	37	0.23			0.00			38	1	20	SPARE
UNDERCOUNTER ICE MAKER	20	1	39		0.68			0.00		40	1	20	SPARE
SPARE	20	1	41			0.00			0.00	42	1	20	SPARE
			TOTAL	5.0	5.7	6.1	3.5	3.8	4.6	TOTAL			
				PHASE TOTAL (KVA)			TOTAL LOAD (KVA)						
				8.4	9.6	10.7	28.7						
				PHASE TOTAL (A)			TOTAL LOAD (A)						
				70.40	79.76	88.93	79.6						

208/120 VOLTS
3-PHASE, 4-WIRE
22 kAIC

PANEL NAME: LP-3-ADM
MAIN BREAKER : 250A P
PANEL RATING : 400A

TYPE: NEMA 12
MOUNT: SURFACE
LOCATION: ADM ELECT RM 1317

DESCRIPTION	TRIP	POLE	CKT No.	KILO-VOLT-AMPERES A	B	C	KILO-VOLT-AMPERES A	B	C	CKT No.	POLE	TRIP	DESCRIPTION
LP-3A-ADM	100	3	1	5.64			2.78			2	3	100	LP-3B-ADM
			3		5.64			2.78		4			
			5			5.64			2.78	6			
LP-3C-ADM	100	3	7	4.45			10.63			8	3	100	LP-3D-ADM
			9		4.45			10.63		10			
			11			4.45			10.63	12			
SPARE	20	1	13	0.00			0.00			14	1	20	SPARE
SPARE	20	1	15		0.00			0.00		16	1	20	SPARE
SPARE	20	1	17			0.00			0.00	18	1	20	SPARE
SPARE	20	1	19	0.00			0.00			20	1	20	SPARE
SPARE	20	1	21		0.00			0.00		22	1	20	SPARE
SPARE	20	1	23			0.00			0.00	24	1	20	SPARE
SPARE	20	1	25	0.00			0.00			26	1	20	SPARE
SPARE	20	1	27		0.00			0.00		28	1	20	SPARE
SPARE	20	1	29			0.00			0.00	30	1	20	SPARE
SPARE	20	1	31	0.00			0.00			32	1	20	SPARE
SPARE	20	1	33		0.00			0.00		34	1	20	SPARE
SPARE	20	1	35			0.00			0.00	36	1	20	SPARE
SPARE	20	1	37	0.00			0.00			38	1	20	SPARE
SPARE	20	1	39		0.00			0.00		40	1	20	SPARE
SPARE	20	1	41			0.00			0.00	42	1	20	SPARE
			TOTAL	10.09	10.09	10.09	13.41	13.41	13.41	TOTAL			
				PHASE TOTAL (KVA)			TOTAL LOAD (KVA)						
				23.50	23.50	23.50	70.50						
				PHASE TOTAL (A)			TOTAL LOAD (A)						
				195.83	195.83	195.83	195.69						

208/120 VOLTS
3-PHASE, 4-WIRE
22 kAIC

PANEL NAME: LP-3A-ADM
MAIN BREAKER : 100A P
PANEL RATING : 100A

TYPE: NEMA 12
MOUNT: SURFACE
LOCATION: ADM ELECT RM. 1317

DESCRIPTION	TRIP	POLE	CKT No.	KILO-VOLT-AMPERES A	B	C	KILO-VOLT-AMPERES A	B	C	CKT No.	POLE	TRIP	DESCRIPTION
FCU-29	20	2	1	0.05			0.05			2	2	20	FCU-30
			3		0.05			0.05		4			
FCU-31	20	2	5			0.05			0.05	6	2	20	FCU-32
			7	0.05			0.05			8			
FCU-33	20	2	9		0.05			0.05		10	2	20	FCU-34
			11			0.05			0.05	12			
FCU-35	20	2	13	0.05			0.05			14	2	20	FCU-36
			15		0.05			0.05		16			
BC-04	20	2	17			0.09			2.90	18	2	40	WH-03
			19	0.09			2.90			20			
WH-04	40	2	21		2.90			0.10		22	1	20	TP-01 (ROOM 1311)
			23			2.90			0.10	24	1	20	TP-01 (ROOM 1313)
DOAS-1	20	1	25	1.80			0.70			26	1	20	RCP-03
EF-17	20	1	27		0.20			0.12		28	1	20	LCS-70740
DDC-07	20	1	29			1.20			0.12	30	1	20	T-70740
SPARE	20	1	31	0.00			0.00			32	1	20	SPARE
SPARE	20	1	33		0.00			0.00		34	1	20	SPARE
SPARE	20	1	35			0.00			0.00	36	1	20	SPARE
SPARE	20	1	37	0.00			0.00			38	1	20	SPARE
SPARE	20	1	39		0.00			0.00		40	1	20	SPARE
SPARE	20	1	41			0.00			0.00	42	1	20	SPARE
			TOTAL	2.04	3.25	4.29	3.75	0.37	3.22	TOTAL			
				PHASE TOTAL (KVA)			TOTAL LOAD (KVA)						
				5.79	3.62	7.51	16.92						
				PHASE TOTAL (A)			TOTAL LOAD (A)						
				48.25	30.17	62.58	46.97						

208/120 VOLTS
3-PHASE, 4-WIRE
22 kAIC

PANEL NAME: LP-3B-ADM
MAIN BREAKER : 100A P
PANEL RATING : 100A

TYPE: NEMA 12
MOUNT: SURFACE
LOCATION: ADM ELECT RM. 1317

DESCRIPTION	TRIP	POLE	CKT No.	KILO-VOLT-AMPERES A	B	C	KILO-VOLT-AMPERES A	B	C	CKT No.	POLE	TRIP	DESCRIPTION
FCU-37	20	2	1	0.05			0.05			2	2	20	FCU-38
			3		0.05			0.05		4			
FCU-39	20	2	5			0.05			0.05	6	2	20	FCU-40
			7	0.05			0.05			8			
FCU-41	20	2	9		0.05			0.05		10	2	20	FCU-42
			11			0.05			0.05	12			
FCU-43	20	2	13	0.05			0.05			14	2	20	FCU-44
			15		0.05			0.05		16			
FCU-45	20	2	17			0.05			0.12	18	2	20	BC-05
			19	0.05			0.12			20			
DOAS-2	20	1	21		1.80			0.12		22	1	20	LCP-AP04
SPARE	20	1	23			0.00			0.12	24	1	20	LCP-AP05
BMS-01	20	1	25	1.20			0.12			26	1	20	LCP-AP06
BMS-MCP	20	1	27		1.20			0.12		28	1	20	LCS-EF-20
LCS-EF-21	20	1	29			0.12			1.20	30	1	20	BMS-04
VRF CENTRALIZED CONTROLLER	20	1	31	1.20			0.00			32	1	20	SPARE
SPARE	20	1	33		0.00			0.00		34	1	20	SPARE
SPARE	20	1	35			0.00			0.00	36	1	20	SPARE
SPARE	20	1	37	0.00			0.00			38	1	20	SPARE
SPARE	20	1	39		0.00			0.00		40	1	20	SPARE
SPARE	20	1	41			0.00			0.00	42	1	20	SPARE
			TOTAL	2.60	3.15	0.27	0.39	0.39	1.54	TOTAL			
				PHASE TOTAL (KVA)			TOTAL LOAD (KVA)						
				2.99	3.54	1.81	8.34						
				PHASE TOTAL (A)			TOTAL LOAD (A)						
				24.92	29.50	15.08	23.15						

208/120 VOLTS
3-PHASE, 4-WIRE
22 kAIC

PANEL NAME: LP-3C-ADM
MAIN BREAKER : 100A P
PANEL RATING : 100A

TYPE: NEMA 12
MOUNT: FLUSH
LOCATION: ADM CORR. 1300

DESCRIPTION	TRIP	POLE	CKT No.	KILO-VOLT-AMPERES A	B	C	KILO-VOLT-AMPERES A	B	C	CKT No.	POLE	TRIP	DESCRIPTION
FCU-46	20	2	1	0.05			0.05			2	2	20	FCU-47
			3		0.05			0.05		4			
FCU-48	20	2	5			0.05			0.05	6	2	20	FCU-49
			7	0.05			0.05			8			
FCU-50	20	2	9		0.05			0.05		10	2	20	FCU-51
			11			0.05			0.05	12			
FCU-52	20	2	13	0.05			0.05			14	2	20	FCU-53
			15		0.05			0.05		16			
FCU-54	20	2	17			0.05			0.05	18	2	20	FCU-55
			19	0.05			0.05			20			
HP-01	30	2	21		2.20			0.00		22	2	20	SPARE
			23			2.20			0.00	24			
DDC-06	20	1	25	1.20			0.12			26	1	20	LCS-EF-18
EF-18	20	1	27		0.70			0.12		28	1	20	LCS-EF-19
EF-20	20	1	29			0.20			0.70	30	1	20	EF-21
DDC-05	20	1	31	1.20			0.12			32	1	20	LCS-EF-17
IG-RCP-01 (INERT GAS PANEL)	20	1	33		1.20			1.20		34	1	20	PRE-ACTION RELEASING PANEL
RELEASING PANEL COMPRESSOR	20	1	35			1.20			0.00	36	1	20	SPARE
SPARE	20	1	37	0.00			0.00			38	1	20	SPARE
SPARE	20	1	39		0.00			0.00		40	1	20	SPARE
SPARE	20	1	41			0.00			0.00	42	1	20	SPARE
			TOTAL	2.60	4.25	3.75	0.44	1.47	0.85	TOTAL			
				PHASE TOTAL (KVA)			TOTAL LOAD (KVA)						
				3.04	5.72	4.60	13.36						
				PHASE TOTAL (A)			TOTAL LOAD (A)						
				25.33	47.67	38.33	37.08						

208/120 VOLTS
3-PHASE, 4-WIRE
22 kAIC

PANEL NAME: LP-3D-ADM
MAIN BREAKER : 200A P
PANEL RATING : 200A

TYPE: NEMA 12
MOUNT: SURFACE
LOCATION: ADM ELECT RM. 1317

DESCRIPTION	TRIP	POLE	CKT No.	KILO-VOLT-AMPERES A	B	C	KILO-VOLT-AMPERES A	B	C	CKT No.	POLE	TRIP	DESCRIPTION
ADM WEST RECP - EL.485.00	20	1	1	1.80			1.62			2	1	20	ADM WEST RECP - EL.485.00
ADM WEST RECP - EL.485.00	20	1	3		1.44			1.44		4	1	20	ADM WEST RECP - EL.485.00
ADM WEST RECP - EL.485.00	20	1	5			1.44			1.26	6	1	20	ADM WEST RECP - EL.485.00
ADM WEST RECP - EL.485.00	20	1	7	1.62			1.62			8	1	20	ADM WEST RECP - EL.485.00
ADM RECP - EL.499.00	20	1	9		0.54			0.62		10	1	20	LTG - (1300)
LTG - (1300,1301,1302)	20	1	11			0.79			0.32	12	1	20	LTG - (1317,1318,1319)
LTG - (1303,1304,1305,1306, 1307,1308,1309)	20	1	13	0.50			0.17			14	1	20	LTG - (1320,1321,1322)
LTG - (1310,1311,1312)	20	1	15		0.26			0.38		16	1	20	LTG - (1323,1324,1325)
LTG - (1313,1314,1315,1316)	20	1	17			0.21			0.41	18	1	20	LTG - (1326,1327,1328,1329,1330,1331)
ADM LTG - ROOF	20	1	19	0.48			1.80			20	1	20	ADM EAST RECP - EL.485.00
ADM EAST RECP - EL.485.00	20	1	21		1.62			1.80		22	1	20	ADM EAST RECP - EL.485.00
ADM EAST RECP - EL.485.00	20	1	23			1.62			1.62	24	1	20	ADM EAST RECP - EL.485.00
ADM EAST RECP - EL.485.00	20	1	25	1.62			1.08			26	1	20	ADM EAST RECP - EL.485.00
ADM EAST RECP - EL.485.00	20	1	27		1.08			1.00		28	1	20	RECP BREAK RM REFRIGERATOR
ADM WEST RECP - EL.485.00	20	1	29			0.72			1.00	30	1	20	RECP BREAK RM - MICROWAVE
SPARE	20	1	31	0.00			0.00			32	1	20	SPARE
SPARE	20	1	33		0.00			0.00		34	1	20	SPARE
SPARE	20	1	35			0.00			0.00	36	1	20	SPARE
SPARE	20	1	37	0.00			0.00			38	1	20	SPARE
SPARE	20	1	39		0.00			0.00		40	1	20	SPARE
SPARE	20	1	41			0.00			0.00	42	1	20	SPARE
			TOTAL	6.02	4.94	4.78	6.29	5.25	4.62	TOTAL			
				PHASE TOTAL (KVA)			TOTAL LOAD (KVA)						
				12.31	10.18	9.39	31.89						
				PHASE TOTAL (A)			TOTAL LOAD (A)						
				102.61	84.86	78.27	88.52						

208/120 VOLTS
3-PHASE, 4-WIRE
22 kAIC

PANEL NAME: LP-EV-ADM
MAIN BREAKER : 250A P
PANEL RATING : 250A

TYPE: NEMA 12
MOUNT: SURFACE
LOCATION: ADM ELECT RM. 1317

DESCRIPTION	TRIP	POLE	CKT No.	KILO-VOLT-AMPERES A	B	C	KILO-VOLT-AMPERES A	B	C	CKT No.	POLE	TRIP	DESCRIPTION
ELECTRIC VEHICLE CHARGER 1	60	2	1	4.16			4.16			2	2	60	ELECTRIC VEHICLE CHARGER 2
			3		4.16			4.16		4			
ELECTRIC VEHICLE CHARGER 3	60	2	5			4.16			4.16	6	2	60	ELECTRIC VEHICLE CHARGER 4
			7	4.16			4.16			8			
ELECTRIC VEHICLE CHARGER 5	60	2	9		4.16			4.16		10	2	60	ELECTRIC VEHICLE CHARGER 6
			11			4.16			4.16	12			
SPARE	60	2	13	0.00			0.00			14	2	60	SPARE
			15		0.00			0.00		16			
SPARE	60	2	17			0.00			0.00	18	2	60	SPARE
			19	0.00			0.00			20			
SPARE	30	2	21		0.00			0.00		22	2	20	SPARE
			23			0.00			0.00	24			
SPARE	20	1	25	0.00			0.00			26	1	20	SPARE
SPARE	20	1	27		0.00			0.00		28	1	20	SPARE
SPARE	20	1	29			0.00			0.00	30	1	20	SPARE
SPARE	20	1	31	0.00			0.00			32	1	20	SPARE
SPARE	20	1	33		0.00			0.00		34	1	20	SPARE
SPARE	20	1	35			0.00			0.00	36	1	20	SPARE
SPARE	20	1	37	0.00			0.00			38	1	20	SPARE
SPARE	20	1	39		0.00			0.00		40	1	20	SPARE
SPARE	20	1	41			0.00			0.00	42	1	20	SPARE
			TOTAL	8.32	8.32	8.32	8.32	8.32	8.32	TOTAL			
				PHASE TOTAL (KVA)			TOTAL LOAD (KVA)						
				16.64	16.64	16.64	49.92						
				PHASE TOTAL (A)			TOTAL LOAD (A)						
				138.67	138.67	138.67	138.56						

1 2

REV	ISSUED FOR	DATE	BY
2	ADDENDUM NO. 5	APR 24	MWM
1	ADDENDUM NO. 3	MAR 24	MWM
0	ISSUED FOR BIDS	FEB 24	MWM

PROJECT ENGINEER: K. BARRETT
DESIGNED BY: A. PENA / D. SHAH
DRAWN BY: A. PENA / D. SHAH
CHECKED BY: G. MARKOU

IF THIS BAR DOES NOT MEASURE 1" THEN DRAWING IS NOT TO FULL SCALE 0 1/2" 1"

COMMONWEALTH OF MASSACHUSETTS
GEORGE MARKOU
ELECTRICAL
No. 50726
REGISTERED PROFESSIONAL ENGINEER
04/22/2024

Hazen
HAZEN AND SAWYER
100 GREAT MEADOW ROAD, SUITE 702
WETHERSFIELD, CT 06109

SPRINGFIELD WATER AND SEWER COMMISSION

WEST PARISH WATER TREATMENT PLANT

FILED SUB-BID

WATER TREATMENT BUILDING
ELECTRICAL
PANEL BOARD SCHEDULES -
ADMINISTRATION AREA SHEET 2

DATE: FEBRUARY 2024
HAZEN NO.: 90398-004
CONTRACT NO.: 24-51
DRAWING NUMBER: E-1804

File: C:\USERS\DKOLOKATHIS\DCACCDOCS\HAZEN AND SAWYER\90398-004_WEST PARISH FILTER WTP\PROJECT FILES\ELECE-1804 Saved by MDREN Save date: 4/22/2024 8:52 AM
PLOT DATE: 4/22/2024 9:43 AM BY: DKOLOKATHIS

240/120 VOLTS
1-PHASE, 3-WIRE
22kAIC (MINIMUM)

PANEL NAME: LP-UPS-EMER-1-ADM
MAIN BREAKER : 100A 2P
PANEL RATING : 100A

TYPE: NEMA 12
MOUNT: SURFACE
LOCATION: ADM ELECT RM. 1317

DESCRIPTION	TRIP	POLE	CKT No.	KILO-VOLT-AMPERES A	KILO-VOLT-AMPERES B	KILO-VOLT-AMPERES A	KILO-VOLT-AMPERES B	CKT No.	POLE	TRIP	DESCRIPTION
EM/EXIT LTG - EL. 457,STAIR A (ADM)	20	1	1	0.56		0.55		2	1	20	EM/EXIT LTG - EL 471 (ADM)
EM/EXIT LTG - EL 485 (ADM)	20	1	3		0.43		0.51	4	1	20	EM/EXIT LTG - EL. 457 RM 2101 (TB)
EM/EXIT LTG - EL. 457 RM 2100/2102 (TB)	20	1	5	0.58		1.36		6	1	20	EM/EXIT LTG - EL. 471 RM WEST, STAIR C, STAIR D (TB)
EM/EXIT LTG - EL. 471 RM EAST(TB)	20	1	7		1.29		1.27	8	1	20	EM/EXIT LTG - EL. 485 RM 2301 NORTH (TB)
EM/EXIT LTG - EL. 485 RM 2300(TB)	20	1	9	0.68		1.18		10	1	20	EM/EXIT LTG - EL. 485 RM 2302/2303(TB)
EXIT DOOR EXTERIOR ADM/TB LTG	20	1	11		0.78		0.85	12	1	20	EM/EXIT LTG - EL. 471 RM EAST, STAIR B (TB)
TB ROOF LTG	20	1	13	1.00		1.13		14	1	20	EM/EXIT LTG - EL. 485 RM 2301 SOUTH (TB)
TB ROOF LTG	20	1	15		0.85		0.00	16	1	20	SPARE
SPARE	20	1	17	0.00		0.00		18	1	20	SPARE
SPARE	20	1	19		0.00		0.00	20	1	20	SPARE
SPARE	20	1	21	0.00		0.00		22	1	20	SPARE
SPARE	20	1	23		0.00		0.00	24	1	20	SPARE
SPARE	20	1	25	0.00		0.00		26	1	20	SPARE
SPARE	20	1	27		0.00		0.00	28	1	20	SPARE
SPARE	20	1	29	0.00		0.00		30	1	20	SPARE

TOTAL	2.82	3.35	4.21	2.63	TOTAL
	PHASE TOTAL (KVA)		TOTAL LOAD (KVA)		
	7.04	5.98	13.02		
	PHASE TOTAL (A)		TOTAL LOAD (A)		
	58.64	49.85	54.24		

208/120 VOLTS
3-PHASE, 4-WIRE
22kAIC

PANEL NAME: LP-UPS-ADM
MAIN BREAKER: 100A P
PANEL RATING: 100A

TYPE: NEMA 12
MOUNT: SURFACE
LOCATION: ADM IT/SCADA RM 1323

DESCRIPTION	TRIP	POLE	CKT No.	KILO-VOLT-AMPERES A	KILO-VOLT-AMPERES B	KILO-VOLT-AMPERES C	KILO-VOLT-AMPERES A	KILO-VOLT-AMPERES B	KILO-VOLT-AMPERES C	CKT No.	POLE	TRIP	DESCRIPTION
SCADA SERVER NO. 1	20	1	2	1.10			1.10			2	1	20	SCADA SERVER NO. 2
SCADA SERVER NO. 3	20	1	4		1.10			0.85		4	1	20	OPERATOR CONSOLE & MONITOR 1
OPERATOR CONSOLE & MONITOR 2	20	1	6			0.85			0.85	6	1	20	OPERATOR CONSOLE & MONITOR 3
OPERATOR SCREEN & MONITORS	20	1	8	0.85			0.21			8	1	20	PLC CABINET NO. 1 (TRAIN A)
PLC CABINET NO. 2 (TRAIN B)	20	1	10		0.21			0.42		10	1	20	PLC CABINET NO. 3 (BOP)
IT SERVER # 1	20	1	12			1.10			1.10	12	1	20	IT SERVER # 2
IT SERVER # 3	20	1	14	1.10			0.60			14	1	20	IT DATA DIODE
IT FIREWALL	20	1	16		0.24			0.60		16	1	20	SCADA DATA DIODE
NETWORK ROUTER	20	1	18			1.20			1.10	18	1	20	IT NAS2
SCADA NAS1	20	1	20	1.10			0.85			20	1	20	PROGRAMMING STATION & MONITOR
ETHERNET SWITCH NO. 1	20	1	22		1.10			0.24		22	1	20	ETHERNET SWITCH NO. 2
ETHERNET SWITCH NO. 3	20	1	24			0.85			0.85	24	1	20	ETHERNET SWITCH NO. 4
ETHERNET SWITCH NO. 5	20	1	26	0.85			0.50			26	1	20	ACP-ADM
SPARE	20	1	28		0.00			0.00		28	1	20	SPARE
SPARE	20	1	30			0.00			0.00	30	1	20	SPARE
SPARE	20	1	32	0.00			0.00			32	1	20	SPARE
SPARE	20	1	34		0.00			0.00		34	1	20	SPARE
SPARE	20	1	36			0.00			0.00	36	1	20	SPARE
SPARE	20	1	38	0.00			0.00			38	1	20	SPARE
SPARE	20	1	40		0.00			0.00		40	1	20	SPARE
SPARE	20	1	42			0.00			0.00	42	1	20	SPARE

TOTAL	5.0	2.7	4.0	3.3	2.1	3.9	TOTAL
	PHASE TOTAL (VA)			TOTAL LOAD (VA)			
	8.3	4.8	7.9	20.9			
	PHASE TOTAL (A)			TOTAL LOAD (A)			
	68.8	39.7	65.8	58.1			

1 2

REV	ISSUED FOR	DATE	BY
2	ADDENDUM NO. 5	APR 24	MWM
1	ADDENDUM NO. 3	MAR 24	MWM
0	ISSUED FOR BIDS	FEB 24	MWM

PROJECT ENGINEER: K. BARRETT
DESIGNED BY: A. PENA / D. SHAH
DRAWN BY: A. PENA / D. SHAH
CHECKED BY: G. MARKOU

IF THIS BAR DOES NOT MEASURE 1" THEN DRAWING IS NOT TO FULL SCALE 0 1/2" 1"

COMMONWEALTH OF MASSACHUSETTS
GEORGE MARKOU
ELECTRICAL
No. 50726
REGISTERED PROFESSIONAL ENGINEER
04/22/2024

Hazen
HAZEN AND SAWYER
100 GREAT MEADOW ROAD, SUITE 702
WETHERSFIELD, CT 06109

SPRINGFIELD WATER AND SEWER COMMISSION

WEST PARISH WATER TREATMENT PLANT

FILED SUB-BID

WATER TREATMENT BUILDING
ELECTRICAL
PANEL BOARD SCHEDULES -
ADMINISTRATION AREA SHEET 3

DATE: FEBRUARY 2024
HAZEN NO.: 90398-004
CONTRACT NO.: 24-51
DRAWING NUMBER: E-1805

File: C:\USERS\DKOLOKATHIS\DC\ACCDOCS\HAZEN AND SAWYER\90398-004_WEST PARISH FILTER WTF\PROJECT FILES\ELECE-1805 Saved by MDREN Save date: 4/22/2024 8:58 AM
PLOT DATE: 4/22/2024 9:43 AM BY: DKOLOKATHIS

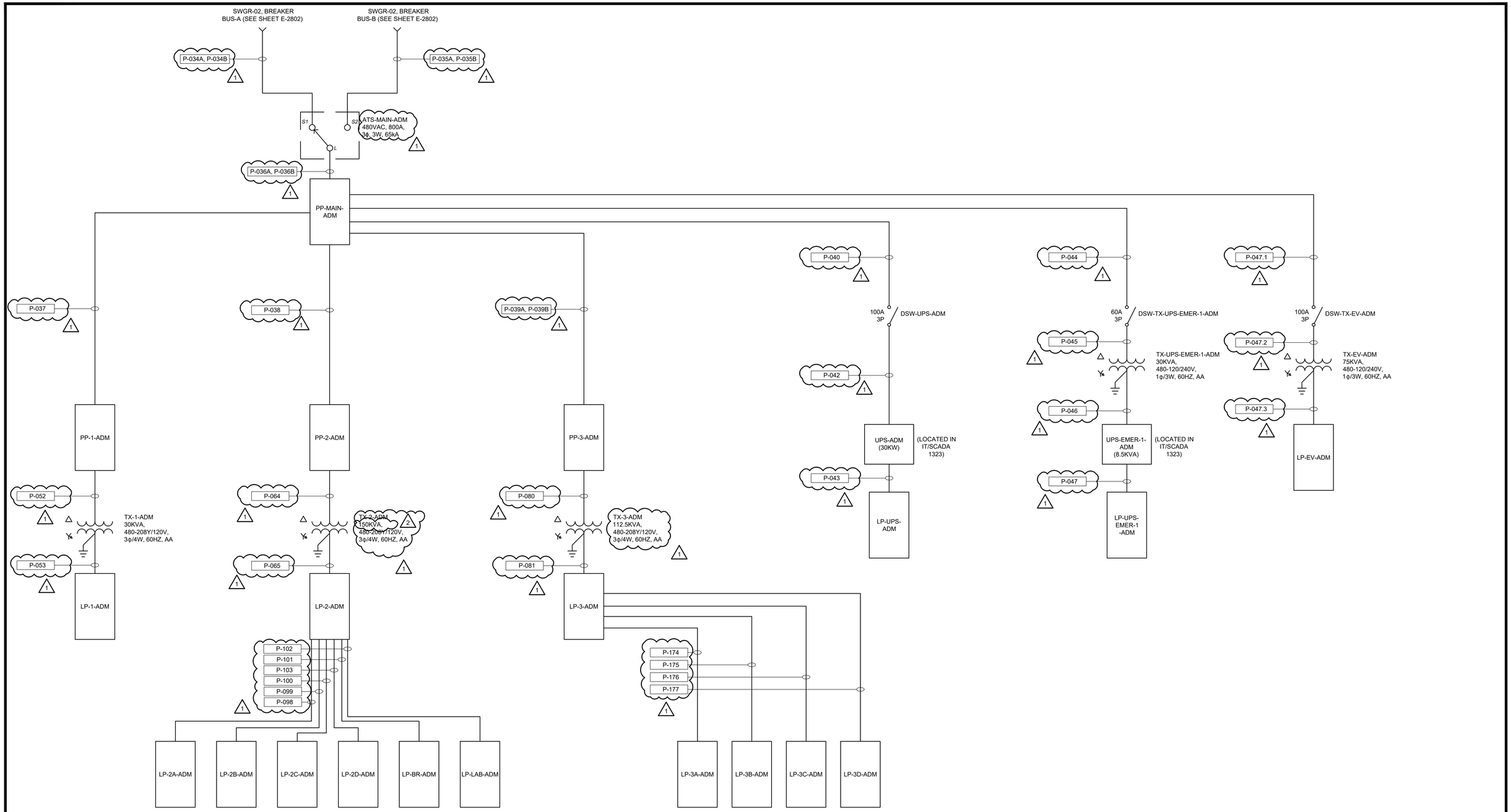

ADMINISTRATION BUILDING - PANELBOARD DISTRIBUTION

SCALE: NTS

REV	ISSUED FOR	DATE	BY
2	ADDENDUM NO. 5	APR 24	MWM
1	ADDENDUM NO. 2	MAR 24	MWM
0	ISSUED FOR BIDS	FEB 24	MWM

PROJECT ENGINEER: K. BARRETT

DESIGNED BY: A. PENA / D. SHAH

DRAWN BY: A. PENA / D. SHAH

CHECKED BY: G. MARKOU

IF THIS BAR DOES NOT MEASURE 1" THEN DRAWING IS NOT TO FULL SCALE — 0 1/2" 1"

COMMONWEALTH OF MASSACHUSETTS — GEORGE MARKOU ELECTRICAL No. 50726 REGISTERED PROFESSIONAL ENGINEER — 04/22/2024

Hazen

HAZEN AND SAWYER
100 GREAT MEADOW ROAD, SUITE 702
WETHERSFIELD, CT 06109

SPRINGFIELD WATER AND SEWER COMMISSION

WEST PARISH WATER TREATMENT PLANT

FILED SUB-BID

WATER TREATMENT BUILDING
ELECTRICAL
RISER DIAGRAM - ADMINISTRATION AREA

DATE: FEBRUARY 2024

HAZEN NO.: 90398-004

CONTRACT NO.: 24-51

DRAWING NUMBER: E-1806

File: C:\USERS\DKOLOKATHIS\DC\ACCDOCS\HAZEN AND SAWYER\90398-004_WEST PARISH FILTER WTF\PROJECT FILES\ELECE-1806 Saved by MDREN Save date: 4/22/2024 8:59 AM
PLOT DATE: 4/22/2024 9:43 AM BY: DKOLOKATHIS

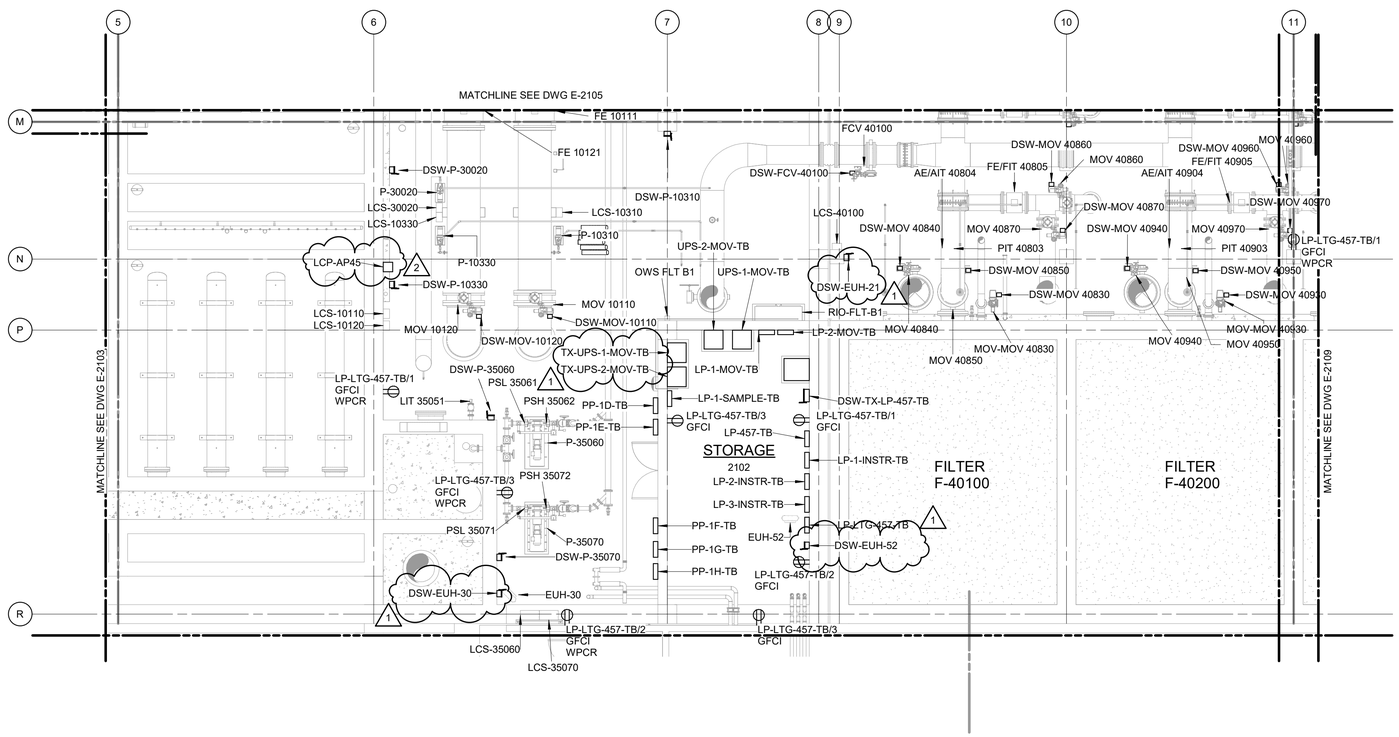

POWER PLAN AT EL 457.00 - AREA 6

1/8" = 1'-0"

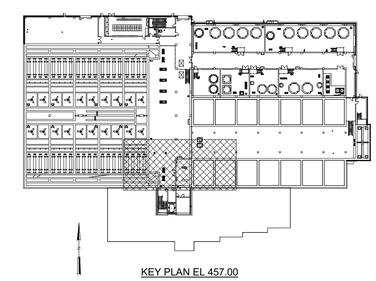

KEY PLAN EL 457.00

1/8" = 1'-0"

8 6 4 2 0 8'

REV	ISSUED FOR	DATE	BY
2	ADDENDUM NO. 5	APR 24	MWM
1	ADDENDUM NO. 3	MAR 24	MWM
0	ISSUED FOR BIDS	FEB 24	MWM

PROJECT ENGINEER:	K. BARRETT
DESIGNED BY:	A. PENA/ D. SHAH
DRAWN BY:	A. PENA/ D. SHAH
CHECKED BY:	G. MARKOU
IF THIS BAR DOES NOT MEASURE 1" THEN DRAWING IS NOT TO FULL SCALE	0 1/2" 1"

COMMONWEALTH OF MASSACHUSETTS
GEORGE MARKOU
ELECTRICAL
No. 50726
REGISTERED PROFESSIONAL ENGINEER

04/22/2024

Hazen

HAZEN AND SAWYER
100 GREAT MEADOW ROAD, SUITE 702
WETHERSFIELD, CT 06109

SPRINGFIELD WATER AND SEWER COMMISSION

WEST PARISH WATER TREATMENT PLANT

FILED SUB-BID

WATER TREATMENT BUILDING
ELECTRICAL
POWER PLAN AT EL 457.00 - PROCESS AREA 6

DATE:	FEBRUARY 2024
HAZEN NO.:	90398-004
CONTRACT NO.:	24-51
DRAWING NUMBER:	E-2106

Autodesk Docs://90398-004_West Parish Filter WTF/90398-004-TB-E.rvt
4/21/2024 11:15:18 PM

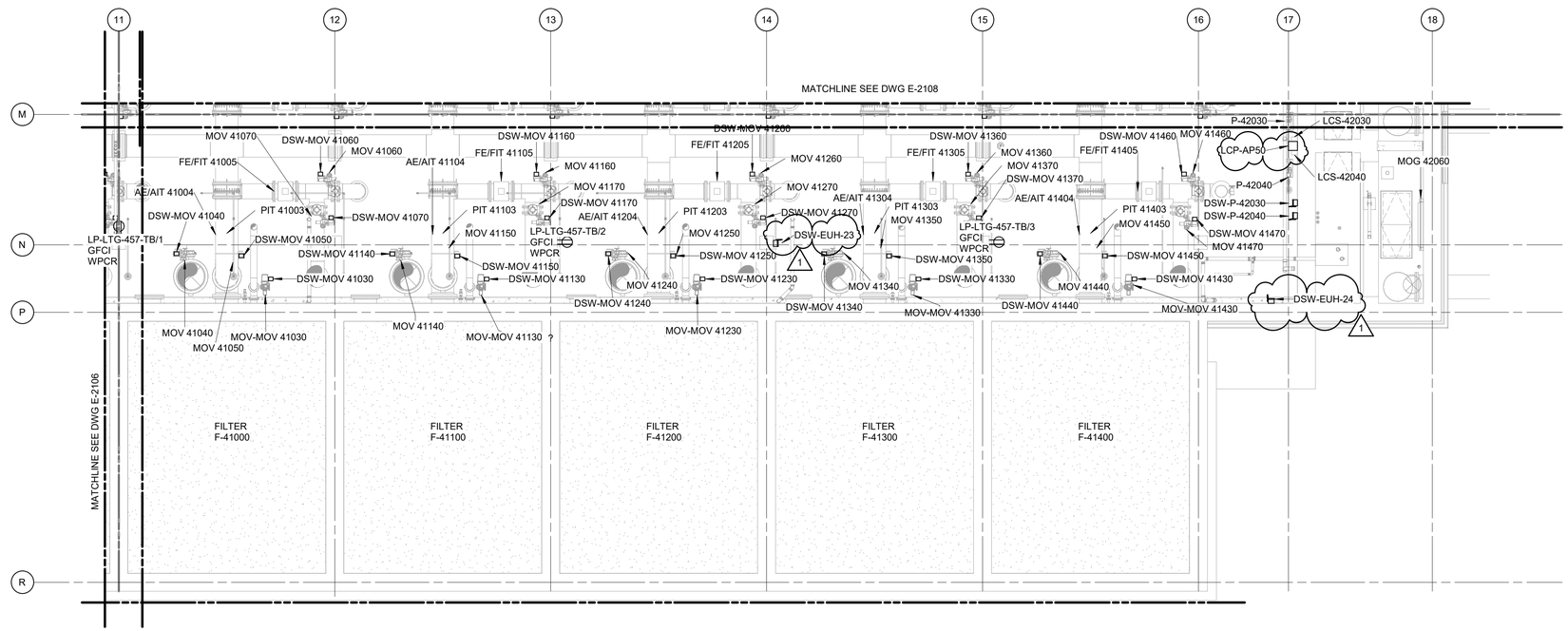

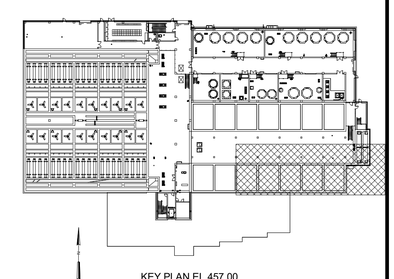

KEY PLAN EL 457.00

POWER PLAN AT EL 457.00 - AREA 9

1/8" = 1'-0"

1/8" = 1'-0" 8 6 4 2 0 8'

REV	ISSUED FOR	DATE	BY
2	ADDENDUM NO. 5	APR 24	MWM
1	ADDENDUM NO. 3	MAR 24	MWM
0	ISSUED FOR BIDS	FEB 24	MWM

PROJECT ENGINEER:	K. BARRETT
DESIGNED BY:	A. PENA/ D. SHAH
DRAWN BY:	A. PENA/ D. SHAH
CHECKED BY:	G. MARKOU

IF THIS BAR DOES NOT MEASURE 1" THEN DRAWING IS NOT TO FULL SCALE 0 1/2" 1"

COMMONWEALTH OF MASSACHUSETTS
GEORGE MARKOU
ELECTRICAL
No. 50726
REGISTERED PROFESSIONAL ENGINEER

04/22/2024

Hazen

HAZEN AND SAWYER
100 GREAT MEADOW ROAD, SUITE 702
WETHERSFIELD, CT 06109

SPRINGFIELD WATER AND SEWER COMMISSION

WEST PARISH WATER TREATMENT PLANT

FILED SUB-BID

WATER TREATMENT BUILDING
ELECTRICAL
POWER PLAN AT EL 457.00 - PROCESS AREA 9

DATE:	FEBRUARY 2024
HAZEN NO.:	90398-004
CONTRACT NO.:	24-51
DRAWING NUMBER:	E-2109

Autodesk Docs://90398-004 - West Parish Filter WTF/90398-004-TB-E.rvt
4/21/2024 1:15:20 PM

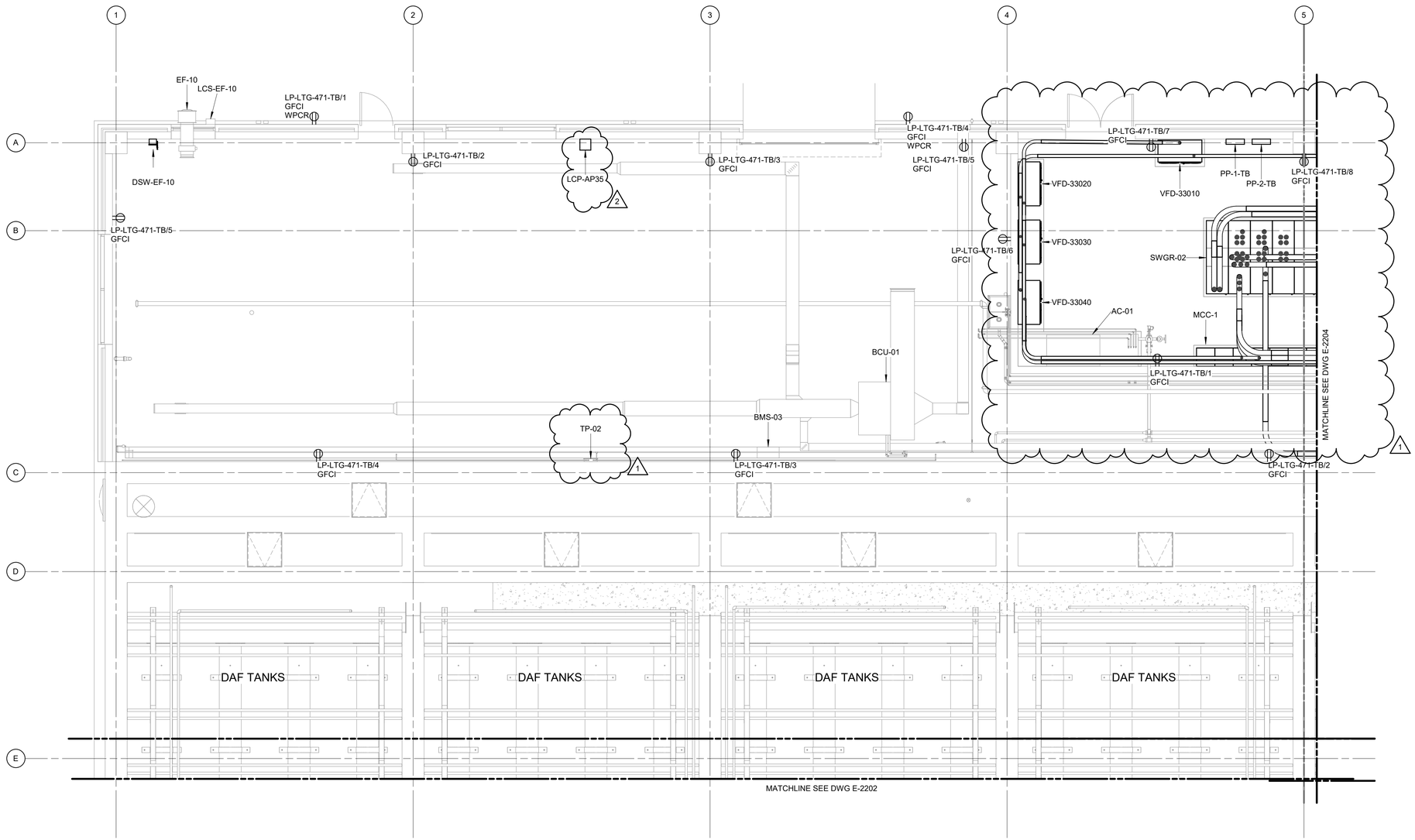

NOTES:

1. COORDINATE WITH C&C SCHEDULE FOR BOTTOM FEED CONDUITS TO/FROM "SWGR-02".

PLANT NORTH
N

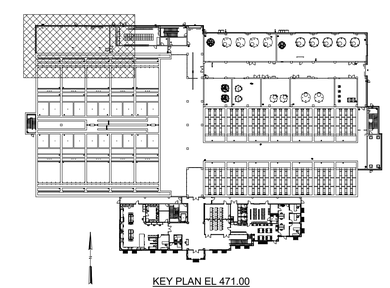

KEY PLAN EL 471.00

POWER PLAN AT EL 471.00 - AREA 1

3/16" = 1'-0"

1/8" = 1'-0" 8 6 4 2 0 8'

REV	ISSUED FOR	DATE	BY
2	ADDENDUM NO. 5	APR 24	MWM
1	ADDENDUM NO. 4	APR 24	MWM
0	ISSUED FOR BIDS	FEB 24	MWM

PROJECT ENGINEER:	K. BARRETT
DESIGNED BY:	A. PENA/ D. SHAH
DRAWN BY:	A. PENA/ D. SHAH
CHECKED BY:	G. MARKOU

IF THIS BAR DOES NOT MEASURE 1" THEN DRAWING IS NOT TO FULL SCALE 0 1/2" 1"

COMMONWEALTH OF MASSACHUSETTS
GEORGE MARKOU
ELECTRICAL
No. 50726
REGISTERED PROFESSIONAL ENGINEER
04/22/2024

Hazen

HAZEN AND SAWYER
100 GREAT MEADOW ROAD, SUITE 702
WETHERSFIELD, CT 06109

SPRINGFIELD WATER AND SEWER COMMISSION

WEST PARISH WATER TREATMENT PLANT

FILED SUB-BID

WATER TREATMENT BUILDING
ELECTRICAL
POWER PLAN AT EL 471.00 - PROCESS AREA 1

DATE:	FEBRUARY 2024
HAZEN NO.:	90398-004
CONTRACT NO.:	24-51
DRAWING NUMBER:	E-2201

Autodesk Docs://90398-004_West Parish Filter WTF/90398-004-TB-E.rvt
4/21/2024 1:15:22 PM

NOTES:

1. COORDINATE WITH C&C SCHEDULE FOR BOTTOM FEED CONDUITS TO/FROM "SWGR-02".

PLANT NORTH

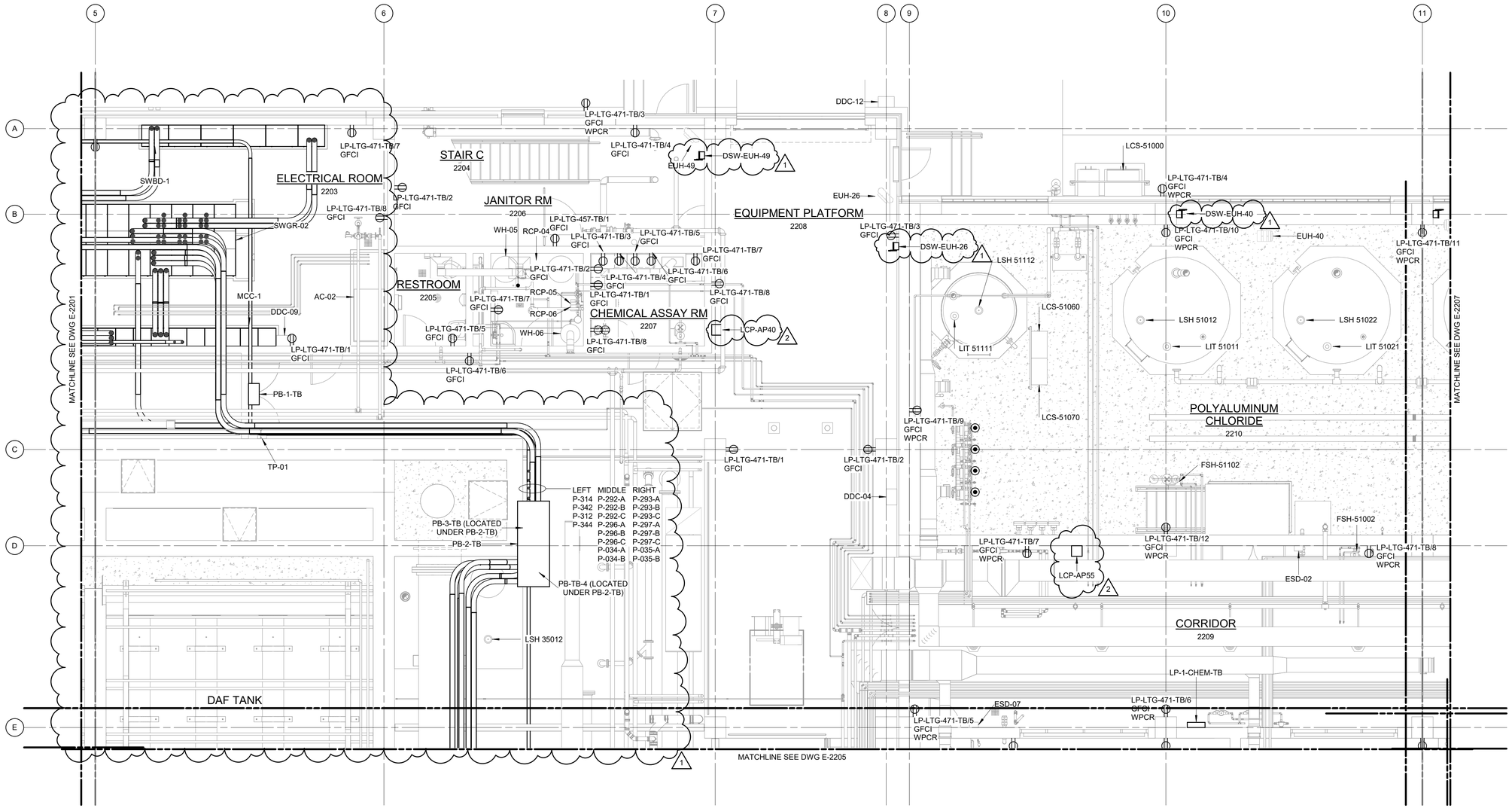

POWER PLAN AT EL 471.00 - AREA 4

3/16" = 1'-0"

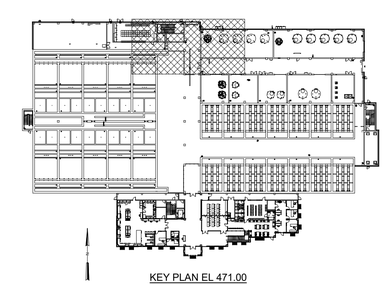

KEY PLAN EL 471.00

1/8" = 1'-0"

REV	ISSUED FOR	DATE	BY
2	ADDENDUM NO. 5	APR 24	MWM
1	ADDENDUM NO. 4	APR 24	MWM
0	ISSUED FOR BIDS	FEB 24	MWM

PROJECT ENGINEER:	K. BARRETT
DESIGNED BY:	A. PENA/ D. SHAH
DRAWN BY:	A. PENA/ D. SHAH
CHECKED BY:	G. MARKOU

IF THIS BAR DOES NOT MEASURE 1" THEN DRAWING IS NOT TO FULL SCALE (0 1/2" 1")

COMMONWEALTH OF MASSACHUSETTS
GEORGE MARKOU
ELECTRICAL
No. 50726
REGISTERED PROFESSIONAL ENGINEER
04/22/2024

Hazen

HAZEN AND SAWYER
100 GREAT MEADOW ROAD, SUITE 702
WETHERSFIELD, CT 06109

SPRINGFIELD WATER AND SEWER COMMISSION

WEST PARISH WATER TREATMENT PLANT

FILED SUB-BID

WATER TREATMENT BUILDING
ELECTRICAL
POWER PLAN AT EL 471.00 - PROCESS AREA 4

DATE:	FEBRUARY 2024
HAZEN NO.:	90398-004
CONTRACT NO.:	24-51
DRAWING NUMBER:	E-2204

Autodesk Docs://90398-004_West Parish Filter WTF/90398-004-TB-E.rvt
4/21/2024 1:15:26 PM

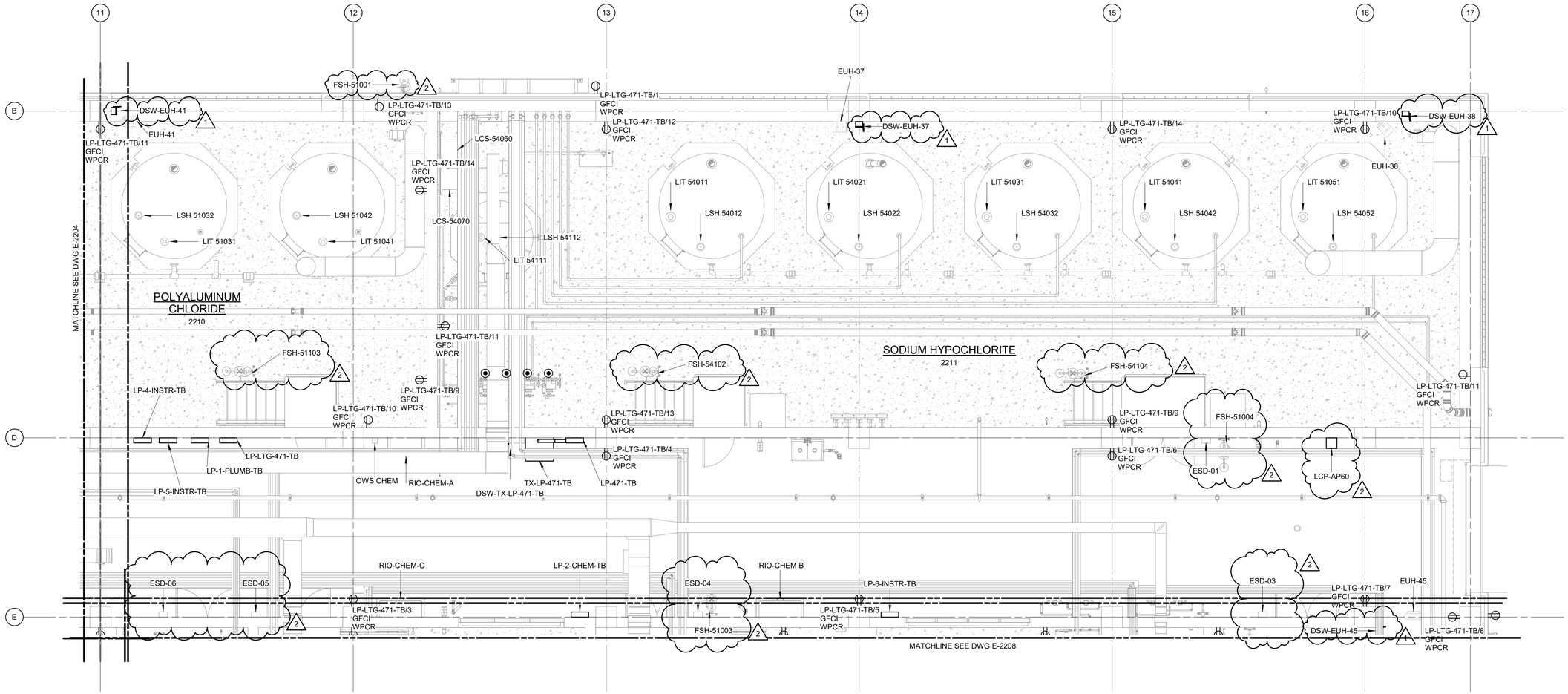

POWER PLAN AT EL 471.00 - AREA 7

3/16" = 1'-0"

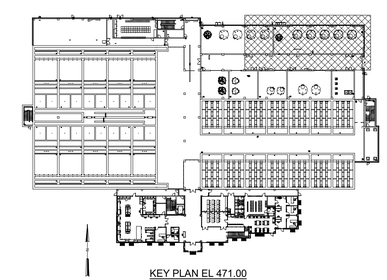

KEY PLAN EL 471.00

1/8" = 1'-0"

8 6 4 2 0 8'

REV	ISSUED FOR	DATE	BY
2	ADDENDUM NO. 5	APR 24	MWM
1	ADDENDUM NO. 3	MAR 24	MWM
0	ISSUED FOR BIDS	FEB 24	MWM

PROJECT ENGINEER:	K. BARRETT
DESIGNED BY:	A. PENA/ D. SHAH
DRAWN BY:	A. PENA/ D. SHAH
CHECKED BY:	G. MARKOU

IF THIS BAR DOES NOT MEASURE 1" THEN DRAWING IS NOT TO FULL SCALE 0 1/2" 1"

COMMONWEALTH OF MASSACHUSETTS
GEORGE MARKOU
ELECTRICAL
No. 50726
REGISTERED PROFESSIONAL ENGINEER

04/22/2024

Hazen

HAZEN AND SAWYER
100 GREAT MEADOW ROAD, SUITE 702
WETHERSFIELD, CT 06109

SPRINGFIELD WATER AND SEWER COMMISSION

WEST PARISH WATER TREATMENT PLANT

FILED SUB-BID

WATER TREATMENT BUILDING
ELECTRICAL
POWER PLAN AT EL 471.00 - PROCESS AREA 7

DATE:	FEBRUARY 2024
HAZEN NO.:	90398-004
CONTRACT NO.:	24-51
DRAWING NUMBER:	E-2207

Autodesk Docs://90398-004_West Parish Filter WTF/90398-004-TB-E.rvt
4/21/2024 11:5:30 PM

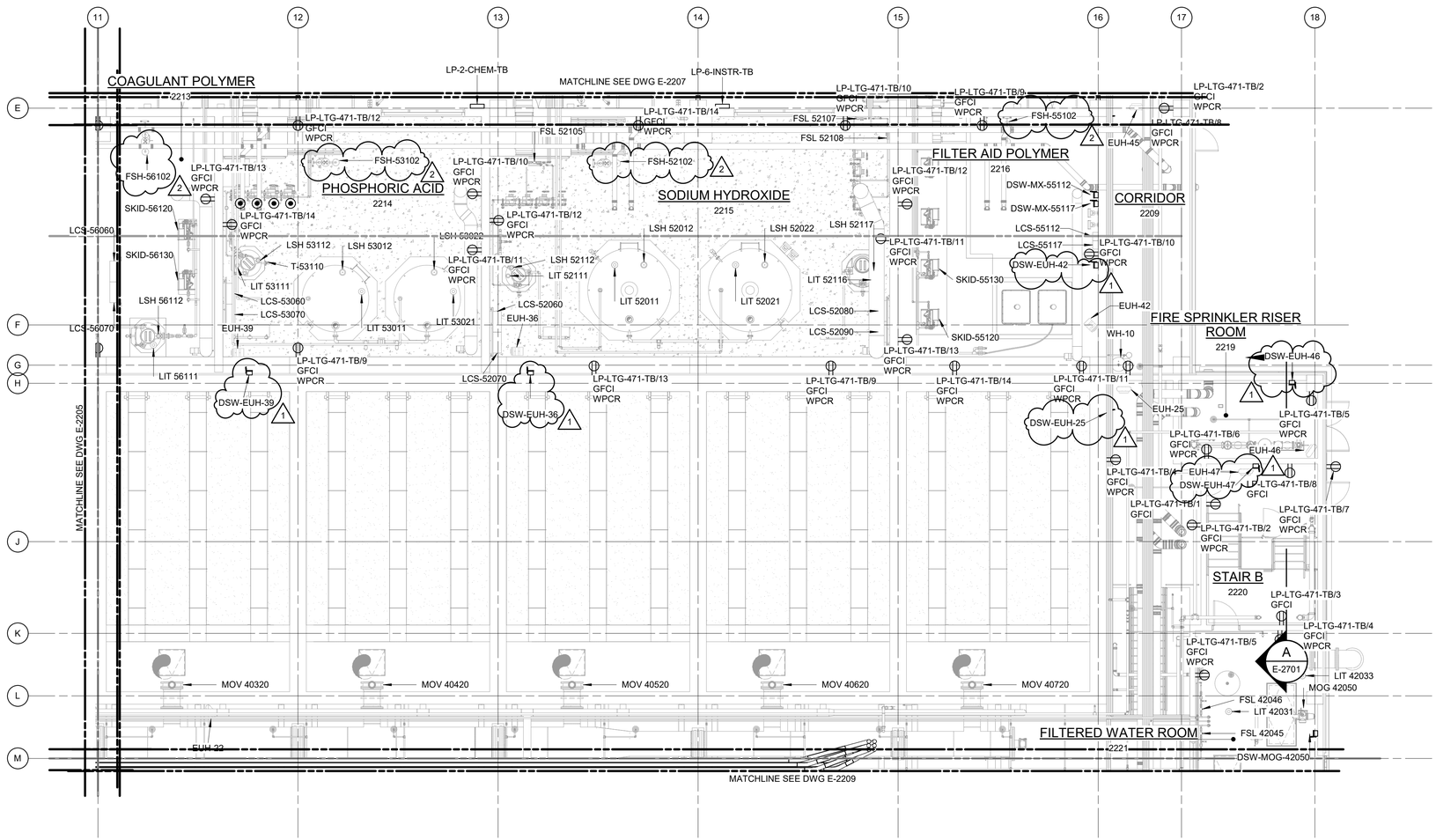

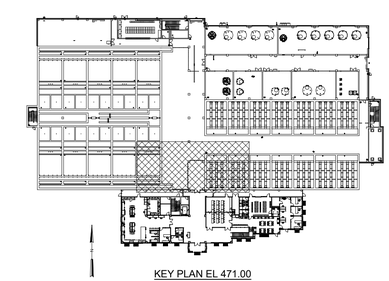

POWER PLAN AT EL 471.00 - AREA 8

1/8" = 1'-0"

1/8" = 1'-0" 8 6 4 2 0 8'

REV	ISSUED FOR	DATE	BY
2	ADDENDUM NO. 5	APR 24	MWM
1	ADDENDUM NO. 3	MAR 24	MWM
0	ISSUED FOR BIDS	FEB 24	MWM

PROJECT ENGINEER:	K. BARRETT
DESIGNED BY:	A. PENA/ D. SHAH
DRAWN BY:	A. PENA/ D. SHAH
CHECKED BY:	G. MARKOU

IF THIS BAR DOES NOT MEASURE 1" THEN DRAWING IS NOT TO FULL SCALE 0 1/2" 1"

COMMONWEALTH OF MASSACHUSETTS
GEORGE MARKOU
ELECTRICAL
No. 50726
REGISTERED PROFESSIONAL ENGINEER
04/22/2024

Hazen

HAZEN AND SAWYER
100 GREAT MEADOW ROAD, SUITE 702
WETHERSFIELD, CT 06109

SPRINGFIELD WATER AND SEWER COMMISSION

WEST PARISH WATER TREATMENT PLANT

FILED SUB-BID

WATER TREATMENT BUILDING
ELECTRICAL
POWER PLAN AT EL 471.00 - PROCESS AREA 8

DATE:	FEBRUARY 2024
HAZEN NO.:	90398-004
CONTRACT NO.:	24-51
DRAWING NUMBER:	E-2208

Autodesk Docs://90398-004_West Parish Filter WTF/90398-004-TB-E.rvt
4/21/2024 1:15:48 PM

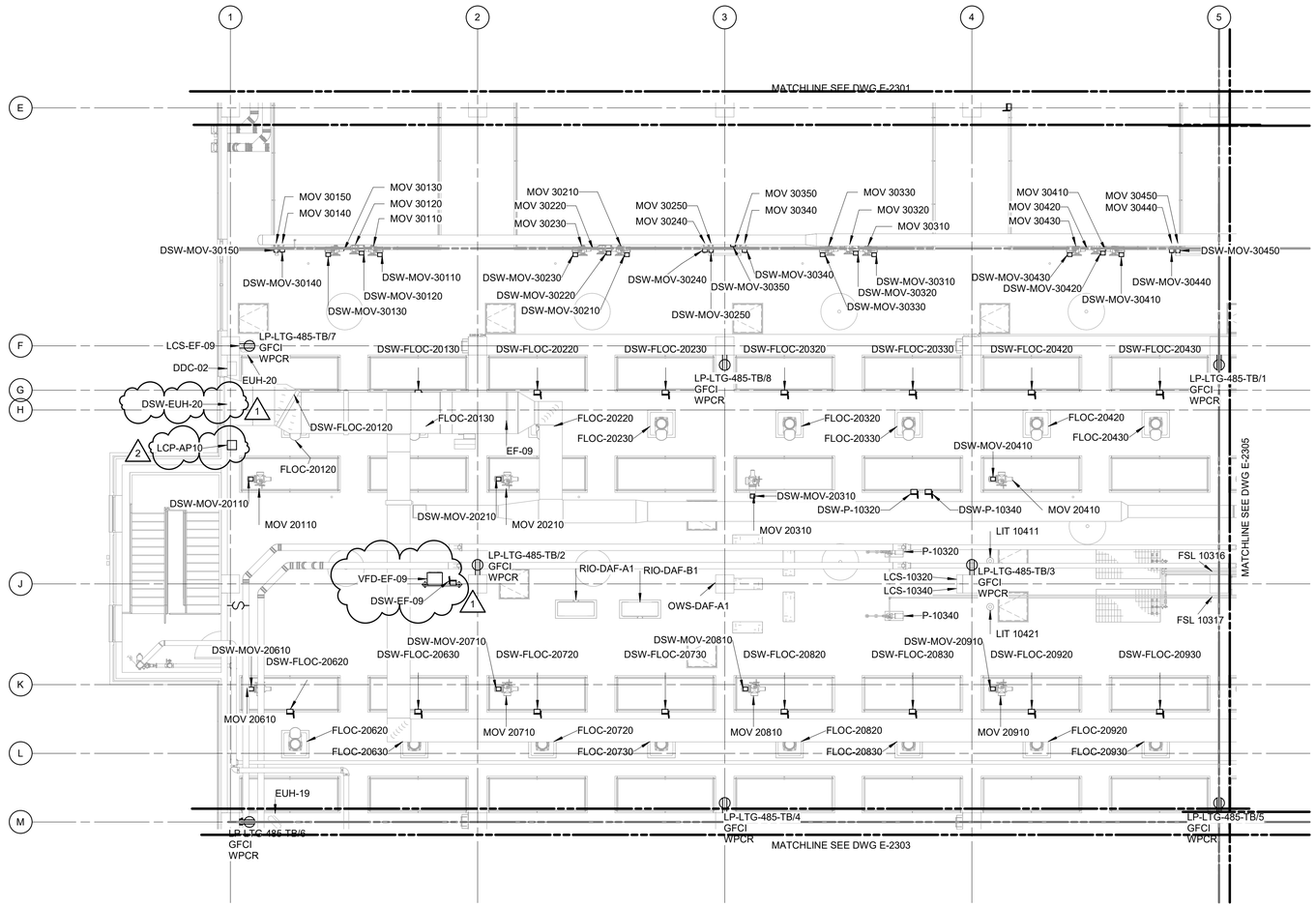

POWER PLAN AT EL 485.00 - AREA 2

1/8" = 1'-0"

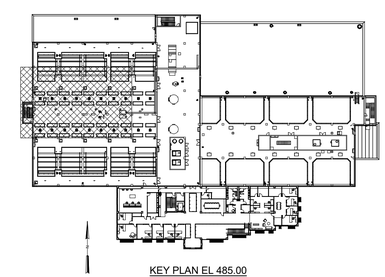

KEY PLAN EL 485.00

1/8" = 1'-0"

REV	ISSUED FOR	DATE	BY
2	ADDENDUM NO. 5	APR 24	MWM
1	ADDENDUM NO. 3	MAR 24	MWM
0	ISSUED FOR BIDS	FEB 24	MWM

PROJECT ENGINEER:	K. BARRETT
DESIGNED BY:	A. PENA/ D. SHAH
DRAWN BY:	A. PENA/ D. SHAH
CHECKED BY:	G. MARKOU

IF THIS BAR DOES NOT MEASURE 1" THEN DRAWING IS NOT TO FULL SCALE

COMMONWEALTH OF MASSACHUSETTS
GEORGE MARKOU
ELECTRICAL
No. 50726
REGISTERED PROFESSIONAL ENGINEER
04/22/2024

Hazen

HAZEN AND SAWYER
100 GREAT MEADOW ROAD, SUITE 702
WETHERSFIELD, CT 06109

SPRINGFIELD WATER AND SEWER COMMISSION

WEST PARISH WATER TREATMENT PLANT

FILED SUB-BID

WATER TREATMENT BUILDING
ELECTRICAL
POWER PLAN AT EL 485.00 - PROCESS AREA 2

DATE:	FEBRUARY 2024
HAZEN NO.:	90398-004
CONTRACT NO.:	24-51
DRAWING NUMBER:	E-2302

Autodesk Docs://90398-004_West Parish Filter WTF/90398-004-TB-E.rvt
4/21/2024 1:15:52 PM

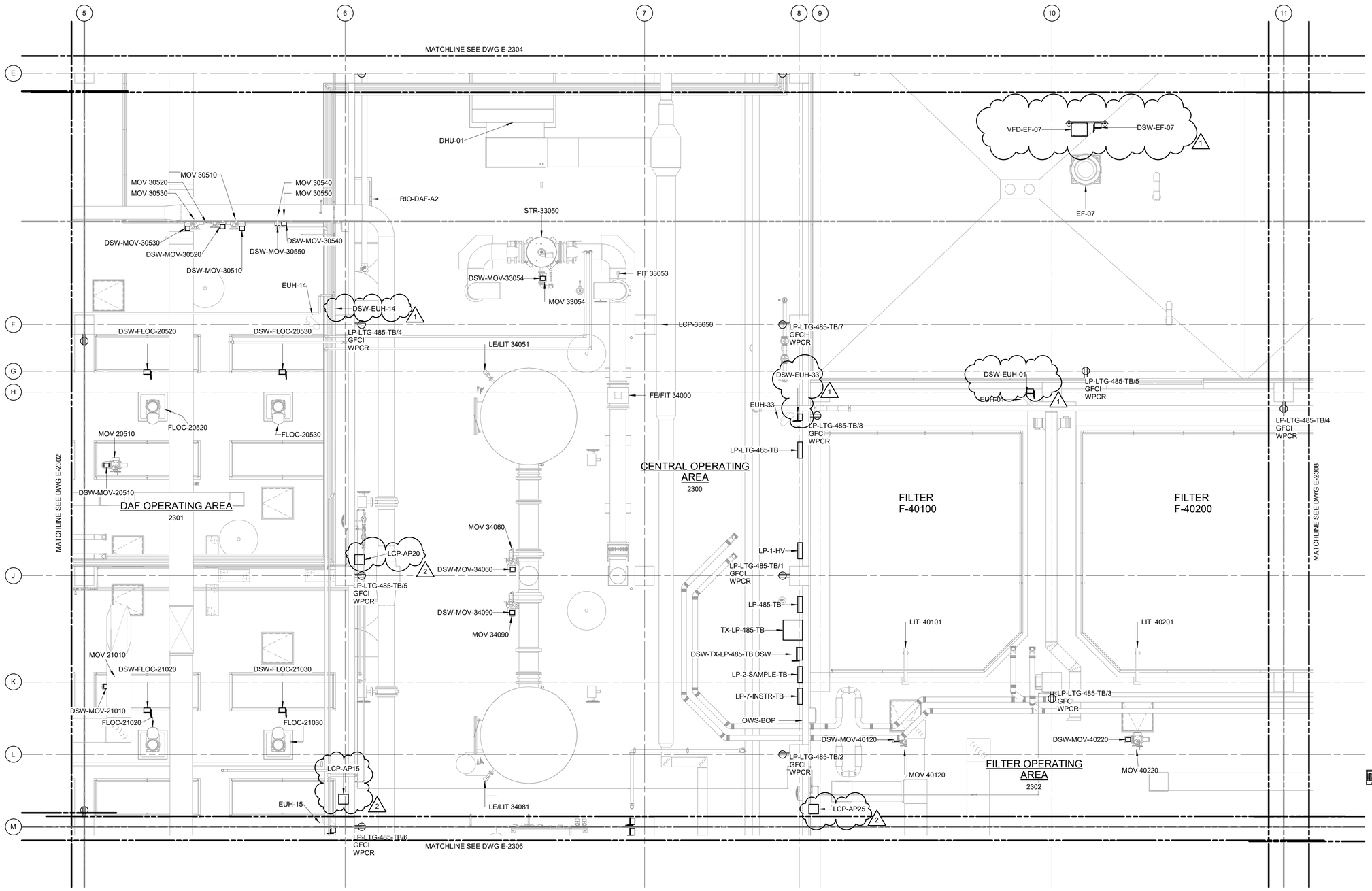

POWER PLAN AT EL 485.00 - AREA 5

3/16" = 1'-0"

1/8" = 1'-0" 8 6 4 2 0 8'

REV	ISSUED FOR	DATE	BY
2	ADDENDUM NO. 5	APR 24	MWM
1	ADDENDUM NO. 3	MAR 24	MWM
0	ISSUED FOR BIDS	FEB 24	MWM

PROJECT ENGINEER:	K. BARRETT
DESIGNED BY:	A. PENA/ D. SHAH
DRAWN BY:	A. PENA/ D. SHAH
CHECKED BY:	G. MARKOU
IF THIS BAR DOES NOT MEASURE 1" THEN DRAWING IS NOT TO FULL SCALE	0 1/2" 1"

COMMONWEALTH OF MASSACHUSETTS
GEORGE MARKOU
ELECTRICAL
No. 50726
REGISTERED PROFESSIONAL ENGINEER
04/22/2024

Hazen

HAZEN AND SAWYER
100 GREAT MEADOW ROAD, SUITE 702
WETHERSFIELD, CT 06109

SPRINGFIELD WATER AND SEWER COMMISSION

WEST PARISH WATER TREATMENT PLANT

FILED SUB-BID

WATER TREATMENT BUILDING
ELECTRICAL
POWER PLAN AT EL 485.00 - PROCESS AREA 5

DATE:	FEBRUARY 2024
HAZEN NO.:	90398-004
CONTRACT NO.:	24-51
DRAWING NUMBER:	E-2305

Autodesk Docs://90398-004_West Parish Filter WTF/90398-004-TB-E.rvt
4/21/2024 11:15:56 PM

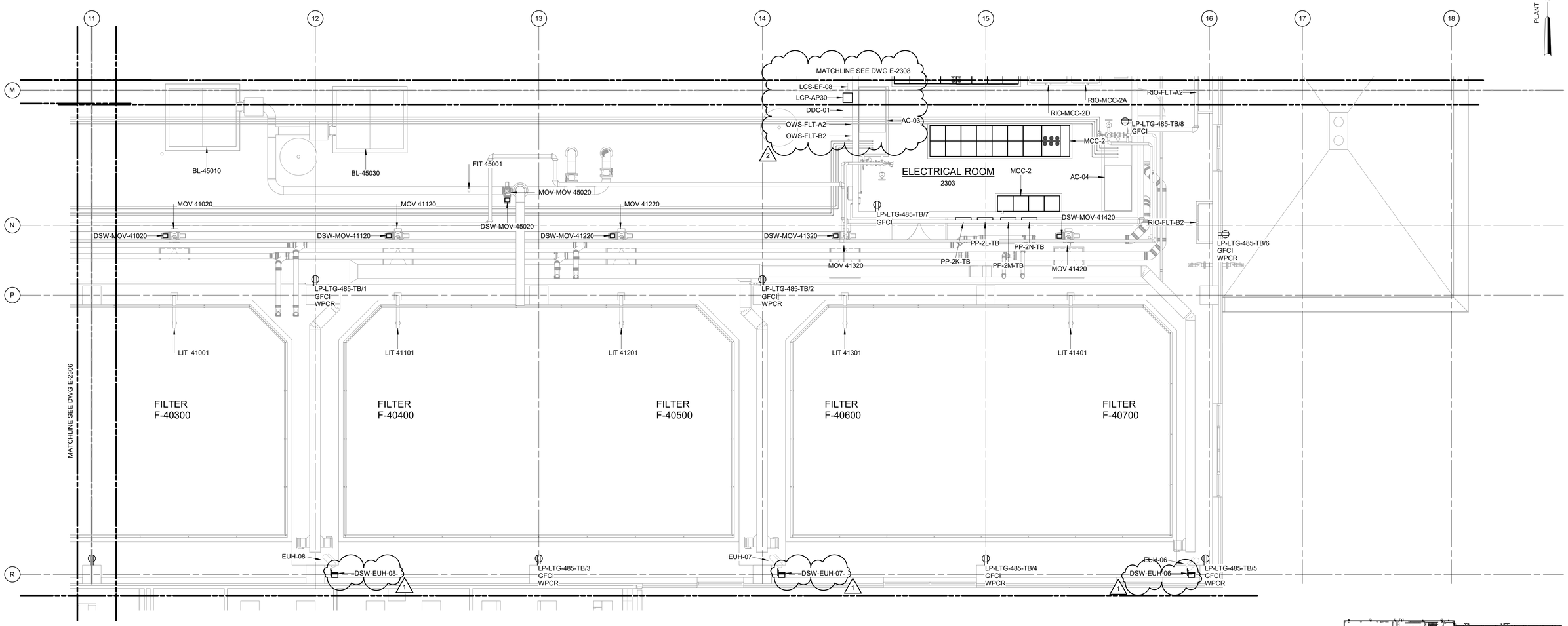

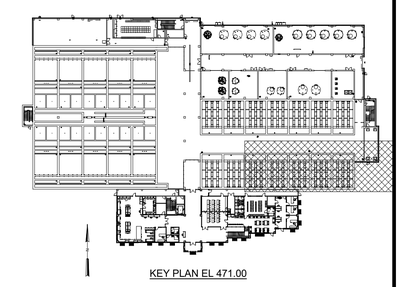

KEY PLAN EL 471.00

POWER PLAN AT EL 485.00 - AREA 9

3/16" = 1'-0"

1/8" = 1'-0" 8 6 4 2 0 8'

REV	ISSUED FOR	DATE	BY
2	ADDENDUM NO. 5	APR 24	MWM
1	ADDENDUM NO. 3	MAR 24	MWM
0	ISSUED FOR BIDS	FEB 24	MWM

PROJECT ENGINEER:	K. BARRETT
DESIGNED BY:	A. PENA/ D. SHAH
DRAWN BY:	A. PENA/ D. SHAH
CHECKED BY:	G. MARKOU
IF THIS BAR DOES NOT MEASURE 1" THEN DRAWING IS NOT TO FULL SCALE	0 1/2" 1"

COMMONWEALTH OF MASSACHUSETTS
GEORGE MARKOU
ELECTRICAL
No. 50726
REGISTERED PROFESSIONAL ENGINEER
04/22/2024

Hazen

HAZEN AND SAWYER
100 GREAT MEADOW ROAD, SUITE 702
WETHERSFIELD, CT 06109

SPRINGFIELD WATER AND SEWER COMMISSION

WEST PARISH WATER TREATMENT PLANT

FILED SUB-BID

WATER TREATMENT BUILDING
ELECTRICAL
POWER PLAN AT EL 485.00 - PROCESS AREA 9

DATE:	FEBRUARY 2024
HAZEN NO.:	90398-004
CONTRACT NO.:	24-51
DRAWING NUMBER:	E-2309

Autodesk Docs://90398-004_West Parish Filter WTF/90398-004-TB-E.rvt
4/22/2024 12:18:08 PM

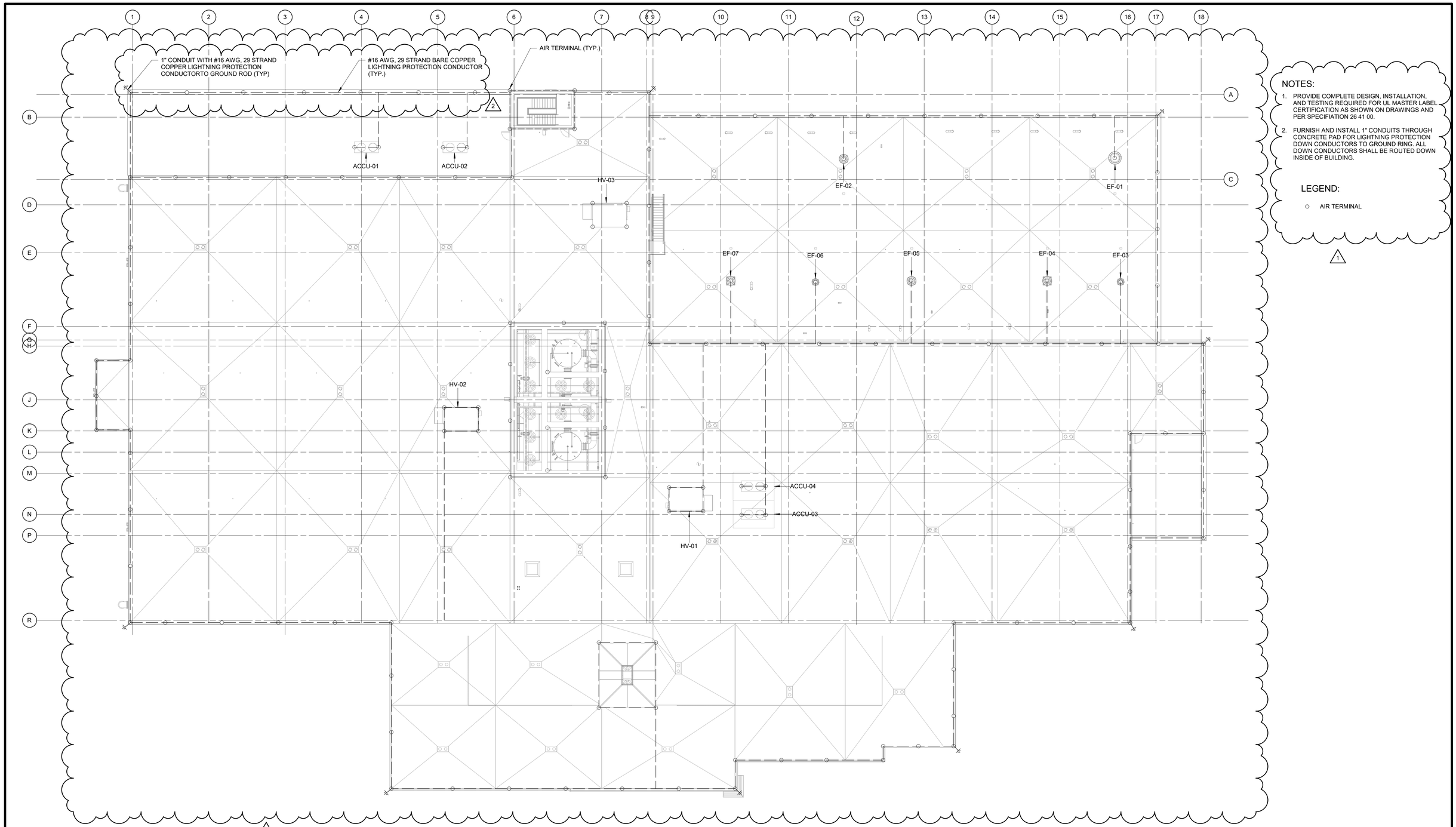

NOTES:

1. PROVIDE COMPLETE DESIGN, INSTALLATION, AND TESTING REQUIRED FOR UL MASTER LABEL CERTIFICATION AS SHOWN ON DRAWINGS AND PER SPECIFIATION 26 41 00.
2. FURNISH AND INSTALL 1" CONDUITS THROUGH CONCRETE PAD FOR LIGHTNING PROTECTION DOWN CONDUCTORS TO GROUND RING. ALL DOWN CONDUCTORS SHALL BE ROUTED DOWN INSIDE OF BUILDING.

LEGEND:

○ AIR TERMINAL

EL 499.00 - OVERALL LIGHTNING PROTECTION PLAN

1/16" = 1'-0"

REV	ISSUED FOR	DATE	BY
2	ADDENDUM NO. 5	APR 24	MWM
1	ADDENDUM NO. 4	APR 24	MWM
0	ISSUED FOR BIDS	FEB 24	MWM

PROJECT ENGINEER: K. BARRETT
DESIGNED BY: A. PENA/ D. SHAH
DRAWN BY: A. PENA/ D. SHAH
CHECKED BY: G. MARKOU

IF THIS BAR DOES NOT MEASURE 1" THEN DRAWING IS NOT TO FULL SCALE 0 1/2" 1"

COMMONWEALTH OF MASSACHUSETTS
GEORGE MARKOU
ELECTRICAL
No. 50726
REGISTERED PROFESSIONAL ENGINEER
04/22/2024

Hazen

HAZEN AND SAWYER
100 GREAT MEADOW ROAD, SUITE 702
WETHERSFIELD, CT 06109

SPRINGFIELD WATER AND SEWER COMMISSION

WEST PARISH WATER TREATMENT PLANT

FILED SUB-BID

WATER TREATMENT BUILDING
ELECTRICAL
OVERALL LIGHTNING PROTECTION PLAN - PROCESS AREAS

DATE: FEBRUARY 2024
HAZEN NO.: 90398-004
CONTRACT NO.: 24-51
DRAWING NUMBER: E-2520

Autodesk Docs://90398-004_West Parish Filter WTF/90398-004-TB-E.rvt
4/22/2024 5:28:34 PM

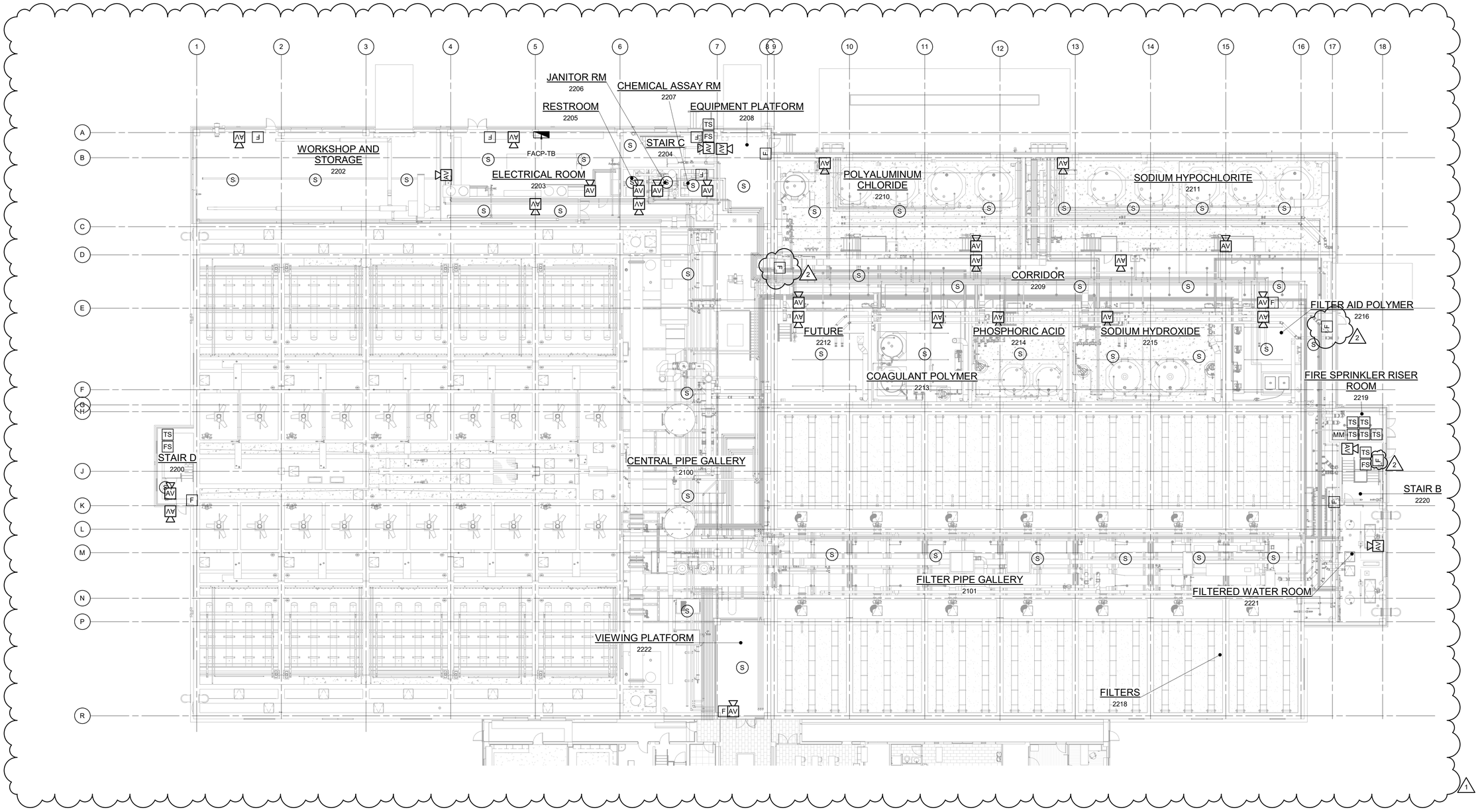

EL 471.00 - OVERALL FIRE ALARM PLAN

1/16" = 1'-0"

1/16" = 1'-0"

REV	ISSUED FOR	DATE	BY
2	ADDENDUM NO. 5	APR 24	MWM
1	ADDENDUM NO. 2	MAR 24	MWM
0	ISSUED FOR BIDS	FEB 24	MWM

PROJECT ENGINEER:	K. BARRETT
DESIGNED BY:	A. PENA/ D. SHAH
DRAWN BY:	A. PENA/ D. SHAH
CHECKED BY:	G. MARKOU

IF THIS BAR DOES NOT MEASURE 1" THEN DRAWING IS NOT TO FULL SCALE

COMMONWEALTH OF MASSACHUSETTS
GEORGE MARKOU
ELECTRICAL
No. 50726
REGISTERED PROFESSIONAL ENGINEER
04/22/2024

Hazen

HAZEN AND SAWYER
100 GREAT MEADOW ROAD, SUITE 702
WETHERSFIELD, CT 06109

SPRINGFIELD WATER AND SEWER COMMISSION

WEST PARISH WATER TREATMENT PLANT

FILED SUB-BID

WATER TREATMENT BUILDING
ELECTRICAL
OVERALL FIRE ALARM PLAN AT EL 471.00 - PROCESS AREAS

DATE:	FEBRUARY 2024
HAZEN NO.:	90398-004
CONTRACT NO.:	24-51
DRAWING NUMBER:	E-2541

Autodesk Docs://90398-004_West Parish Filter WTF/90398-004-TB-E.rvt
4/22/2024 12:18:38 PM

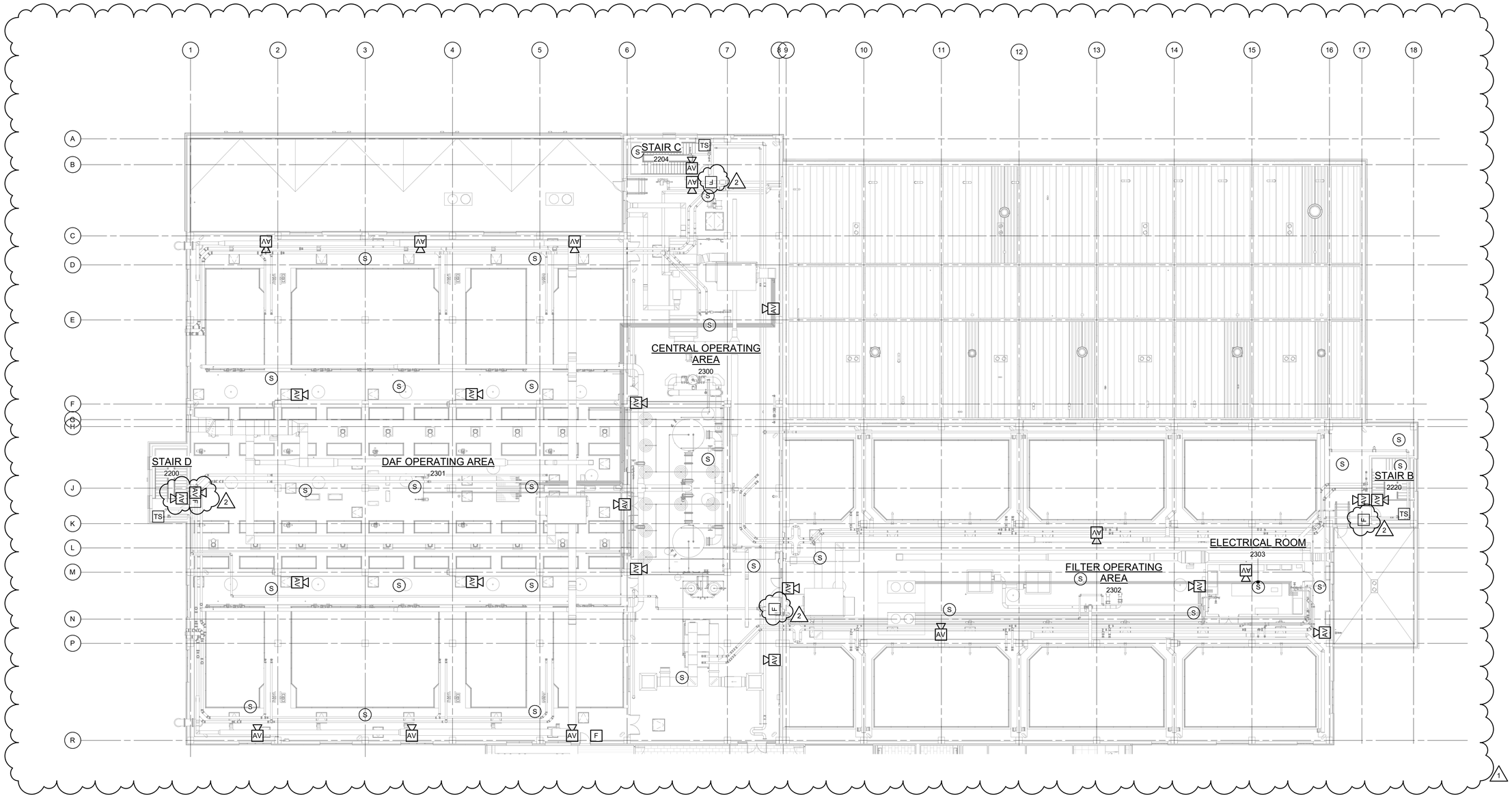

EL 485.00 - OVERALL FIRE ALARM PLAN

1/16" = 1'-0"

1/16" = 1'-0"

REV	ISSUED FOR	DATE	BY
2	ADDENDUM NO. 5	APR 24	MWM
1	ADDENDUM NO. 2	MAR 24	MWM
0	ISSUED FOR BIDS	FEB 24	MWM

PROJECT ENGINEER:	K. BARRETT
DESIGNED BY:	A. PENA/ D. SHAH
DRAWN BY:	A. PENA/ D. SHAH
CHECKED BY:	G. MARKOU

IF THIS BAR DOES NOT MEASURE 1" THEN DRAWING IS NOT TO FULL SCALE

COMMONWEALTH OF MASSACHUSETTS
GEORGE MARKOU
ELECTRICAL
No. 50726
REGISTERED PROFESSIONAL ENGINEER
04/22/2024

Hazen

HAZEN AND SAWYER
100 GREAT MEADOW ROAD, SUITE 702
WETHERSFIELD, CT 06109

SPRINGFIELD WATER AND SEWER COMMISSION

WEST PARISH WATER TREATMENT PLANT

FILED SUB-BID

WATER TREATMENT BUILDING
ELECTRICAL
OVERALL FIRE ALARM PLAN AT EL 485.00 - PROCESS AREAS

DATE:	FEBRUARY 2024
HAZEN NO.:	90398-004
CONTRACT NO.:	24-51
DRAWING NUMBER:	E-2542

Autodesk Docs://90398-004_West Parish Filter WTF/90398-004-TB-E.rvt
4/22/2024 5:28:42 PM

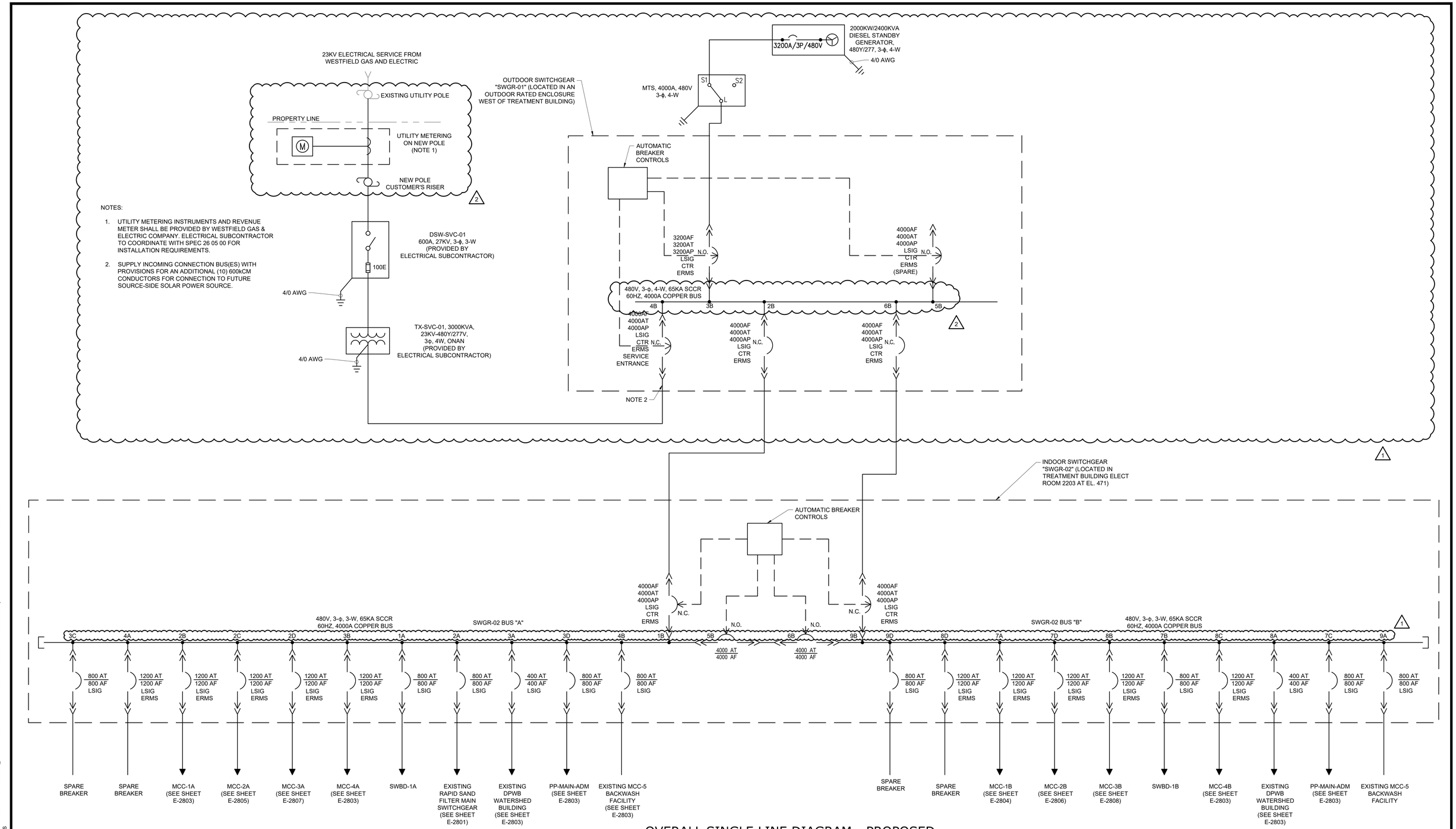

OVERALL SINGLE LINE DIAGRAM - PROPOSED

SCALE: NTS

REV	ISSUED FOR	DATE	BY
2	ADDENDUM NO. 5	APR 24	MWM
1	ADDENDUM NO. 4	APR 24	MWM
0	ISSUED FOR BIDS	FEB 24	MWM

PROJECT ENGINEER: K. BARRETT
DESIGNED BY: A. PENA / D. SHAH
DRAWN BY: A. PENA / D. SHAH
CHECKED BY: G. MARKOU

IF THIS BAR DOES NOT MEASURE 1" THEN DRAWING IS NOT TO FULL SCALE 0 1/2" 1"

COMMONWEALTH OF MASSACHUSETTS
GEORGE MARKOU
ELECTRICAL
No. 50726
REGISTERED PROFESSIONAL ENGINEER
04/22/2024

Hazen
HAZEN AND SAWYER
100 GREAT MEADOW ROAD, SUITE 702
WETHERSFIELD, CT 06109

SPRINGFIELD WATER AND SEWER COMMISSION

WEST PARISH WATER TREATMENT PLANT

FILED SUB-BID

WATER TREATMENT BUILDING
ELECTRICAL
OVERALL PROPOSED SINGLE LINE DIAGRAM - SHEET 1

DATE: FEBRUARY 2024
HAZEN NO.: 90398-004
CONTRACT NO.: 24-51
DRAWING NUMBER: E-2802

File: C:\USERS\DKOLOKATHIS\DC\ACCDOCS\HAZEN AND SAWYER\90398-004_WEST PARISH FILTER WTF\PROJECT FILES\ELECE-2802 Saved by DKOLOKATHIS Save date: 4/22/2024 3:05 PM
PLOT DATE: 4/22/2024 3:05 PM BY: DKOLOKATHIS

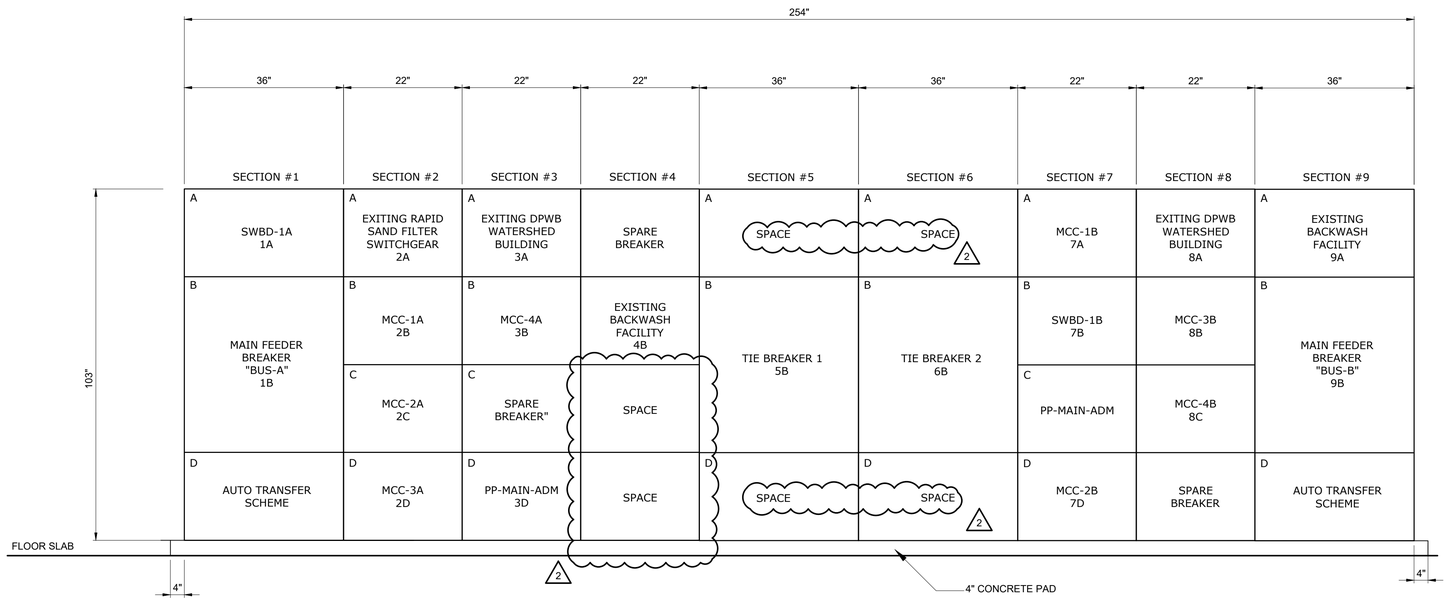

"SWGR-02" ELEVATION
SCALE: NTS

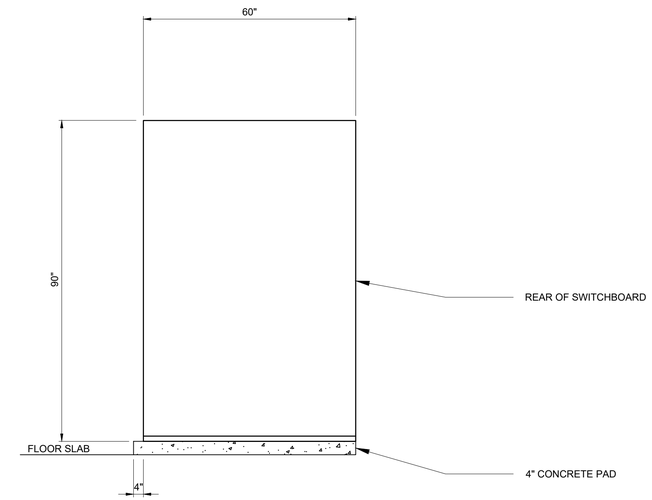

"SWGR-02" SIDE VIEW
SCALE: NTS

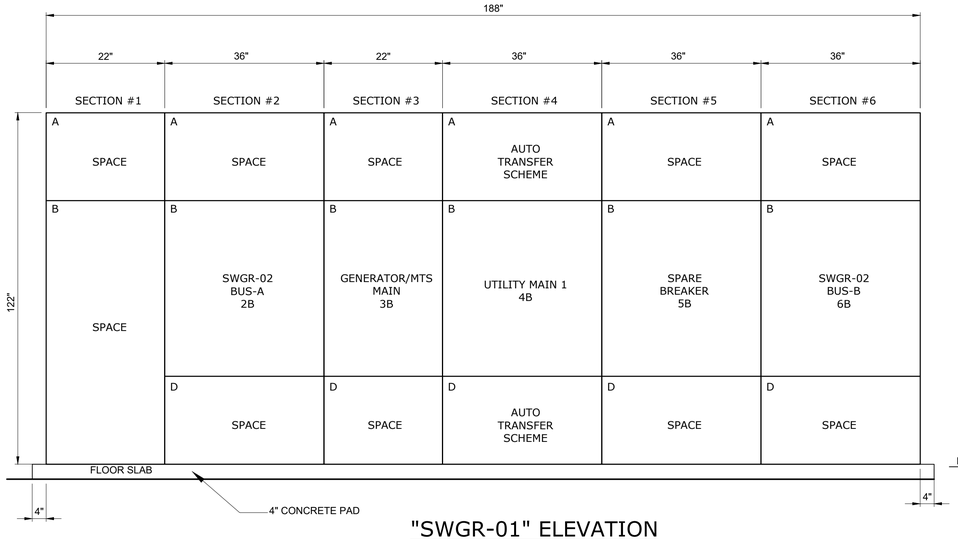

"SWGR-01" ELEVATION
SCALE: NTS

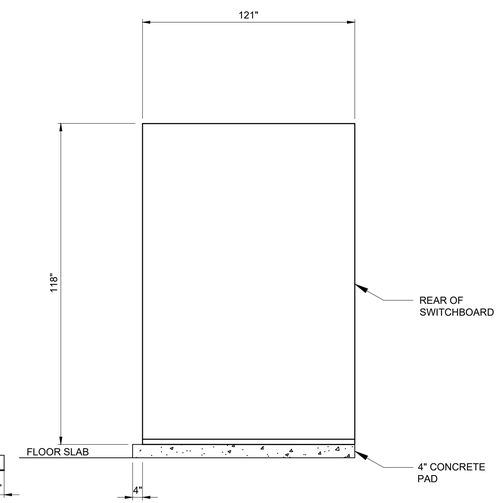

"SWGR-01" SIDE VIEW
SCALE: NTS

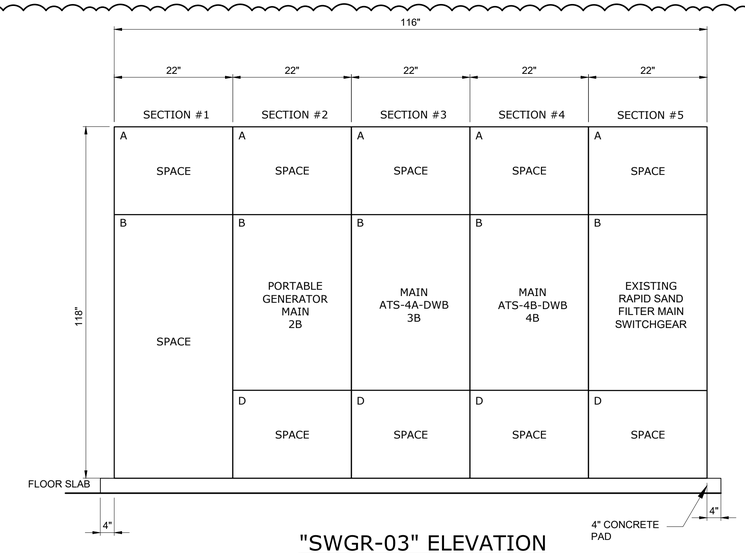

"SWGR-03" ELEVATION
SCALE: NTS

2

1

REV	ISSUED FOR	DATE	BY
2	ADDENDUM NO. 5	APR 24	MWM
1	ADDENDUM NO. 3	MAR 24	MWM
0	ISSUED FOR BIDS	FEB 24	MWM

PROJECT ENGINEER:	K. BARRETT
DESIGNED BY:	A. PENA / D. SHAH
DRAWN BY:	A. PENA / D. SHAH
CHECKED BY:	G. MARKOU

IF THIS BAR DOES NOT MEASURE 1" THEN DRAWING IS NOT TO FULL SCALE 0 1/2" 1"

COMMONWEALTH OF MASSACHUSETTS
GEORGE MARKOU
ELECTRICAL
No. 50726
REGISTERED PROFESSIONAL ENGINEER
04/22/2024

Hazen
HAZEN AND SAWYER
100 GREAT MEADOW ROAD, SUITE 702
WETHERSFIELD, CT 06109

SPRINGFIELD WATER AND SEWER COMMISSION

WEST PARISH WATER TREATMENT PLANT

FILED SUB-BID

WATER TREATMENT BUILDING
ELECTRICAL
SWITCHGEAR ELEVATIONS

DATE:	FEBRUARY 2024
HAZEN NO.:	90398-004
CONTRACT NO.:	24-51
DRAWING NUMBER:	E-2811

File: C:\USERS\DSHAH\DOCAC\DOCS\HAZEN AND SAWYER\90398-004_WEST PARISH FILTER WTP\PROJECT FILES\ELEC\E-2811 Saved by DSHAH Save date: 4/22/2024 5:37 PM
PLOT DATE: 4/22/2024 5:42 PM BY: DSHAH

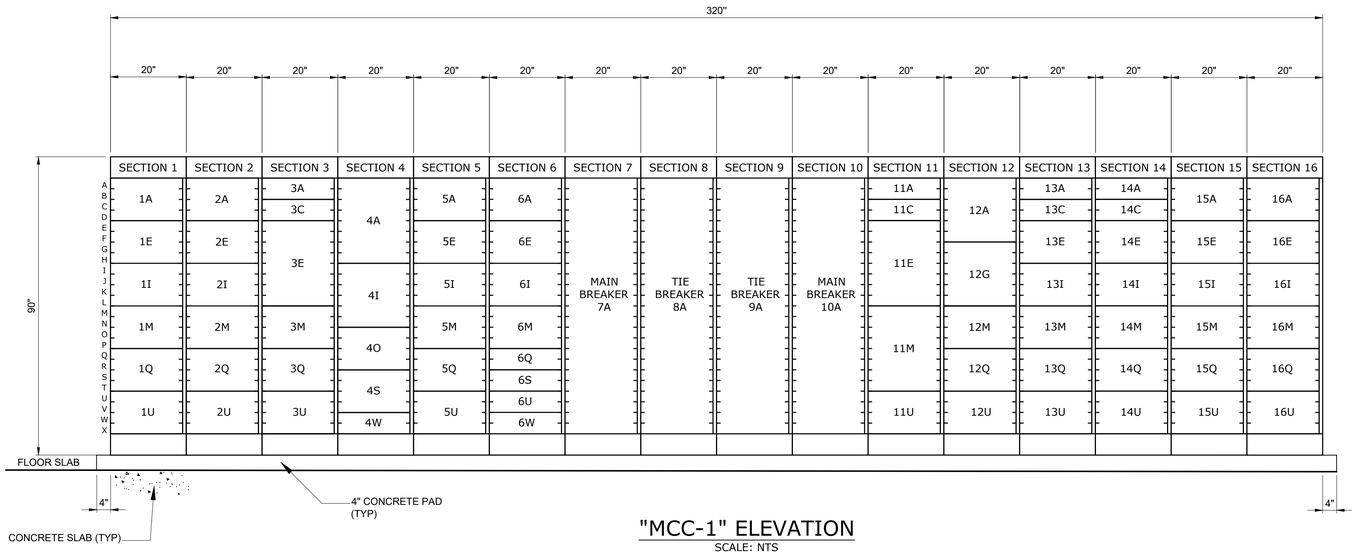

"MCC-1" ELEVATION

SCALE: NTS

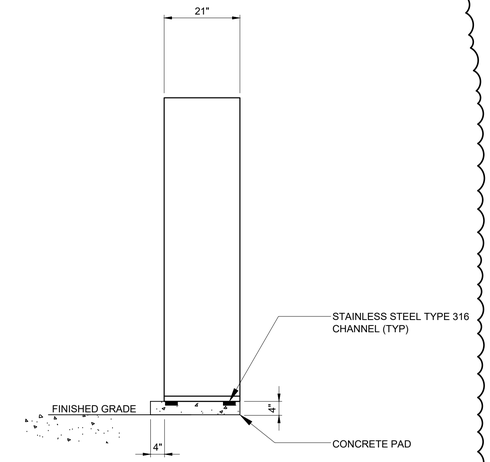

MOTOR CONTROL CENTER DETAIL (SIDE VIEW)

(NOT TO SCALE)

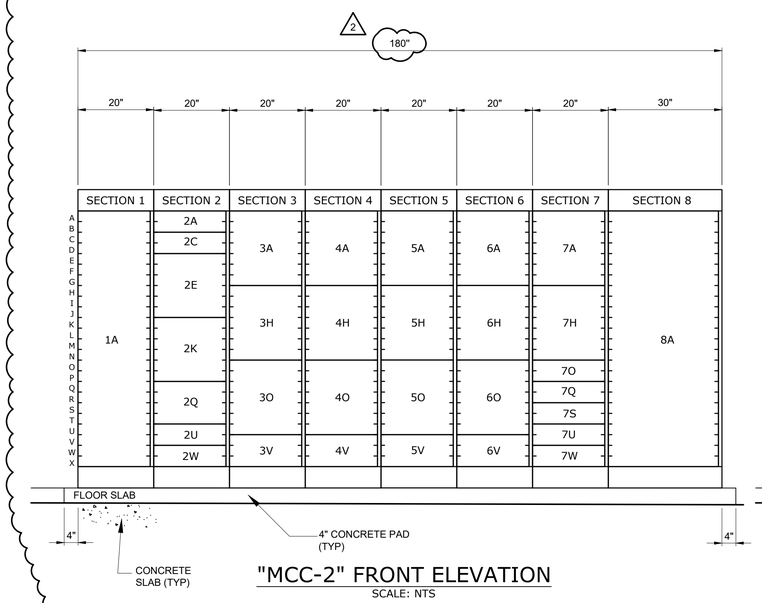

"MCC-2" FRONT ELEVATION

SCALE: NTS

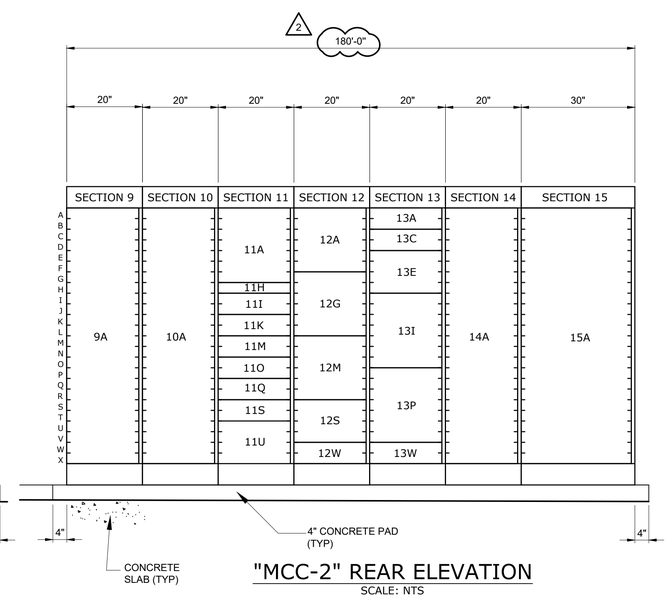

"MCC-2" REAR ELEVATION

SCALE: NTS

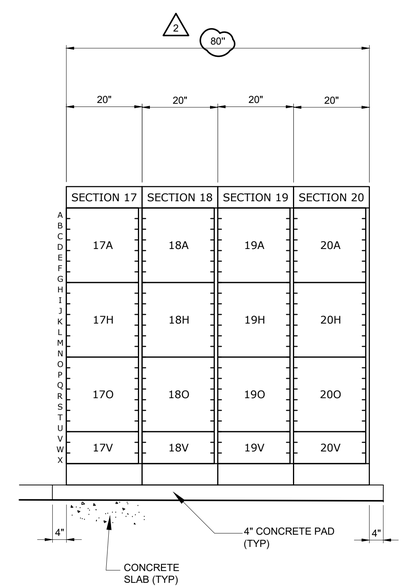

"MCC-2" ELEVATION (SEPARATE SECTION)

SCALE: NTS

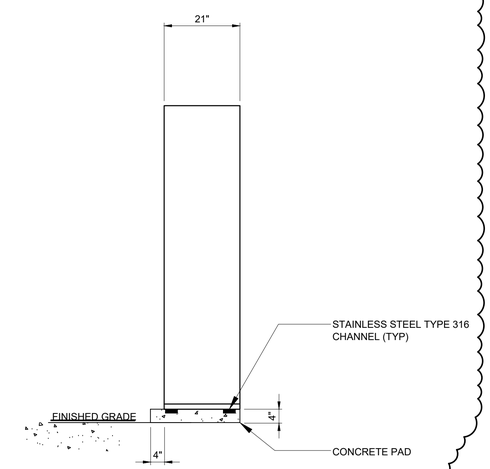

MOTOR CONTROL CENTER DETAIL (SIDE VIEW)

(NOT TO SCALE)

1

REV	ISSUED FOR	DATE	BY
2	ADDENDUM NO. 5	APR 24	MWM
1	ADDENDUM NO. 3	MAR 24	MWM
0	ISSUED FOR BIDS	FEB 24	MWM

PROJECT ENGINEER:	K. BARRETT
DESIGNED BY:	A. PENA / D. SHAH
DRAWN BY:	A. PENA / D. SHAH
CHECKED BY:	G. MARKOU

IF THIS BAR DOES NOT MEASURE 1" THEN DRAWING IS NOT TO FULL SCALE — 0 1/2" 1"

COMMONWEALTH OF MASSACHUSETTS — GEORGE MARKOU — ELECTRICAL — No. 50726 — REGISTERED PROFESSIONAL ENGINEER

04/22/2024

Hazen

HAZEN AND SAWYER
100 GREAT MEADOW ROAD, SUITE 702
WETHERSFIELD, CT 06109

SPRINGFIELD WATER AND SEWER COMMISSION

WEST PARISH WATER TREATMENT PLANT

FILED SUB-BID

WATER TREATMENT BUILDING
ELECTRICAL
MCC ELEVATIONS - SHEET 1

DATE:	FEBRUARY 2024
HAZEN NO.:	90398-004
CONTRACT NO.:	24-51
DRAWING NUMBER:	E-2812

File: C:\USERS\DKOLOKATHIS\DCACCDOCS\HAZEN AND SAWYER\90398-004_WEST PARISH FILTER WTF\PROJECT FILES\ELEC\E-2812 Saved by DKOLOKATHIS Save date: 4/21/2024 8:26 PM
PLOT DATE: 4/22/2024 9:44 AM BY: DKOLOKATHIS

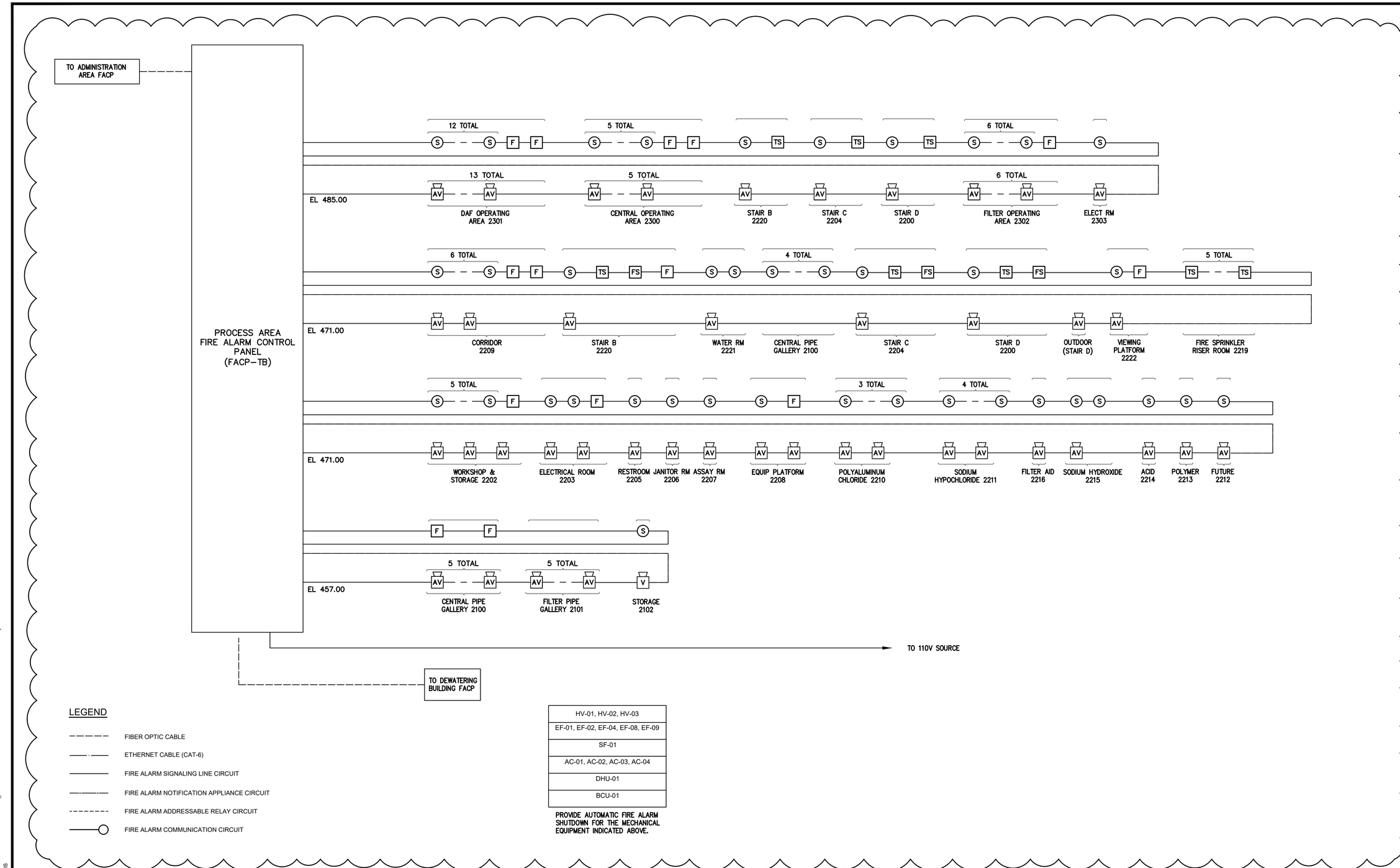

LEGEND

- FIBER OPTIC CABLE
- ETHERNET CABLE (CAT-6)
- FIRE ALARM SIGNALING LINE CIRCUIT
- FIRE ALARM NOTIFICATION APPLIANCE CIRCUIT
- FIRE ALARM ADDRESSABLE RELAY CIRCUIT
- FIRE ALARM COMMUNICATION CIRCUIT

HV-01, HV-02, HV-03
EF-01, EF-02, EF-04, EF-08, EF-09
SF-01
AC-01, AC-02, AC-03, AC-04
DHU-01
BCU-01

PROVIDE AUTOMATIC FIRE ALARM SHUTDOWN FOR THE MECHANICAL EQUIPMENT INDICATED ABOVE.

REV	ISSUED FOR	DATE	BY
2	ADDENDUM NO. 5	APR 24	MWM
1	ADDENDUM NO. 2	MAR 24	MWM
0	ISSUED FOR BIDS	FEB 24	MWM

PROJECT ENGINEER:	K. BARRETT
DESIGNED BY:	A. PENA / D. SHAH
DRAWN BY:	A. PENA / D. SHAH
CHECKED BY:	G. MARKOU
IF THIS BAR DOES NOT MEASURE 1" THEN DRAWING IS NOT TO FULL SCALE	0 1/2" 1"

COMMONWEALTH OF MASSACHUSETTS
GEORGE MARKOU
ELECTRICAL
No. 50726
REGISTERED PROFESSIONAL ENGINEER
04/22/2024

Hazen

HAZEN AND SAWYER
100 GREAT MEADOW ROAD, SUITE 702
WETHERSFIELD, CT 06109

SPRINGFIELD WATER AND SEWER COMMISSION

WEST PARISH WATER TREATMENT PLANT

FILED SUB-BID

WATER TREATMENT BUILDING
ELECTRICAL
FIRE ALARM RISER DIAGRAMS - PROCESS AREA

DATE:	FEBRUARY 2024
HAZEN NO.:	90398-004
CONTRACT NO.:	24-51
DRAWING NUMBER:	E-2815

File: C:\USERS\DKOLOKATHIS\DACCDOCS\HAZEN AND SAWYER\90398-004_WEST PARISH FILTER WTP\PROJECT FILES\ELEC\E-2815 Saved by DKOLOKATHIS Save date: 4/21/2024 8:26 PM
PLOT DATE: 4/22/2024 9:44 AM BY: DKOLOKATHIS

208/120 VOLTS
3-PHASE, 4-WIRE
22 kAIC

PANEL NAME: LP-1-INSTR-TB
MAIN BREAKER : 100A P
PANEL RATING : 100A

TYPE: NEMA 4X
MOUNT: SURFACE
LOCATION: TB EL: 457.00 STORAGE 2102

DESCRIPTION	TRIP	POLE	CKT No.	KILO-VOLT-AMPERES A	B	C	KILO-VOLT-AMPERES A	B	C	CKT No.	POLE	TRIP	DESCRIPTION
FIT-10111	20	1	1	0.10			0.10			2	1	20	FIT-10121
AIT-10311	20	1	3		0.10			0.10		4	1	20	AIT-10312
AIT-10331	20	1	5			0.10			0.10	6	1	20	AIT-10331
AIT-10321	20	1	7	0.10			0.10			8	1	20	AIT-10322
AIT-10341	20	1	9		0.10			0.10		10	1	20	AIT-10342
LCS-30010	20	1	11			0.90			0.10	12	1	20	AIT-30012
LCS-30020	20	1	13	0.90			0.10			14	1	20	AIT-30022
FSL-33012	20	1	15		0.10			0.10		16	1	20	FSL-33022
FSL-33032	20	1	17			0.10			0.10	18	1	20	FSL-33042
SPARE	20	1	19	0.00			0.10			20	1	20	AIT-40104
FIT-40105	20	1	21		0.10			0.10		22	1	20	AIT-40204
FIT-40205	20	1	23			0.10			0.10	24	1	20	AIT-42041
AIT-42042	20	1	25	0.10			0.10			26	1	20	AIT-40304
RIO-FLT-B1	20	1	27		0.38			0.10		28	1	20	FIT-40305
SPARE	20	1	29			0.00			0.38	30	1	20	RIO-FLT-A1
SPARE	20	1	31	0.00			0.00			32	1	20	SPARE
SPARE	20	1	33		0.00			0.00		34	1	20	SPARE
SPARE	20	1	35			0.00			0.00	36	1	20	SPARE
SPARE	20	1	37	0.00			0.00			38	1	20	SPARE
SPARE	20	1	39		0.00			0.00		40	1	20	SPARE
SPARE	20	1	41			0.00			0.00	42	1	20	SPARE
TOTAL				1.2	0.8	1.2	0.5	0.5	0.8	TOTAL			
				PHASE TOTAL (KVA)			TOTAL LOAD (KVA)						
				1.7	1.3	2.0	5.0						
				PHASE TOTAL (A)			TOTAL LOAD (A)						
				14.17	10.67	16.50	13.8						

208/120 VOLTS
3-PHASE, 4-WIRE
22 kAIC

PANEL NAME: LP-2-INSTR-TB
MAIN BREAKER : 100A P
PANEL RATING : 100A

TYPE: NEMA 4X
MOUNT: SURFACE
LOCATION: TB EL: 457.00 STORAGE 2102

DESCRIPTION	TRIP	POLE	CKT No.	KILO-VOLT-AMPERES A	B	C	KILO-VOLT-AMPERES A	B	C	CKT No.	POLE	TRIP	DESCRIPTION
AIT-40404	20	1	1	0.10			0.10			2	1	20	FIT-40405
AIT-40504	20	1	3		0.10			0.10		4	1	20	FIT-40505
AIT-40604	20	1	5			0.10			0.10	6	1	20	FIT-40605
FSL-10314	20	1	7	0.10			0.10			8	1	20	FSL-10334
AIT-40704	20	1	9		0.10			0.10		10	1	20	FIT-40705
AIT-40804	20	1	11			0.10			0.10	12	1	20	FIT-40805
AIT-40904	20	1	13	0.10			0.10			14	1	20	FIT-40905
AIT-41004	20	1	15		0.10			0.10		16	1	20	FIT-41005
AIT-41104	20	1	17			0.10			0.10	18	1	20	FIT-41105
AIT-41204	20	1	19	0.10			0.10			20	1	20	FIT-41205
LCS-42030	20	1	21		0.90			0.90		22	1	20	LCS-42040
AIT-46004	20	1	23			0.10			0.10	24	1	20	FIT-60504
FIT-60505	20	1	25	0.10			0.10			26	1	20	AIT-60506
FSL-42053	20	1	27		0.10			0.10		28	1	20	FSL-42058
FSL-30014	20	1	29			0.10			0.10	30	1	20	FSL-30024
LSH-70730	20	1	31	0.10			0.00			32	1	20	SPARE
SPARE	20	1	33		0.00			0.00		34	1	20	SPARE
SPARE	20	1	35			0.00			0.00	36	1	20	SPARE
SPARE	20	1	37	0.00			0.00			38	1	20	SPARE
SPARE	20	1	39		0.00			0.00		40	1	20	SPARE
SPARE	20	1	41			0.00			0.00	42	1	20	SPARE
TOTAL				0.60	1.30	0.50	0.50	1.30	0.50	TOTAL			
				PHASE TOTAL (KVA)			TOTAL LOAD (KVA)						
				1.10	2.60	1.00	4.70						
				PHASE TOTAL (A)			TOTAL LOAD (A)						
				9.17	21.67	8.33	13.05						

240/120 VOLTS
1-PHASE, 3-WIRE
22kAIC (MINIMUM)

PANEL NAME: LP-1-UPS-MOV-TB
MAIN BREAKER : 100A 2P
PANEL RATING : 100A

TYPE: NEMA 12
MOUNT: SURFACE
LOCATION: TB: EL 457.00 - STORAGE 2102

DESCRIPTION	TRIP	POLE	CKT No.	KILO-VOLT-AMPERES A	B	KILO-VOLT-AMPERES A	B	CKT No.	POLE	TRIP	DESCRIPTION
MOV-40160	20	2	1	0.31		0.31		2	2	20	MOV-40260
			3		0.31		0.31	4			
MOV-40360	20	2	5	0.31		0.31		6	2	20	MOV-40460
			7		0.31		0.31	8			
MOV-40560	20	2	9	0.31		0.31		10	2	20	MOV-40660
			11		0.31		0.31	12			
MOV-40760	20	2	13	0.31		0.86		14	2	20	MOV-10110
			15		0.31		0.86	16			
MOV-34060	20	2	17	0.41		0.00		18	2	20	SPARE
			19		0.41		0.00	20			
SPARE	20	2	21	0.00		0.00		22	2	20	SPARE
			23		0.00		0.00	24			
SPARE	20	1	25	0.00		0.00		26	1	20	SPARE
SPARE	20	1	27		0.00	0.00		28	1	20	SPARE
SPARE	20	1	29	0.00		0.00		30	1	20	SPARE
TOTAL				1.65	1.65	1.79	1.79	TOTAL			
				PHASE TOTAL (KVA)		TOTAL LOAD (KVA)					
				3.44	3.44	6.88					
				PHASE TOTAL (A)		TOTAL LOAD (A)					
				28.68	28.68	28.68					

240/120 VOLTS
1-PHASE, 3-WIRE
22kAIC (MINIMUM)

PANEL NAME: LP-2-UPS-MOV-TB
MAIN BREAKER : 100A 2P
PANEL RATING : 100A

TYPE: NEMA 12
MOUNT: SURFACE
LOCATION: TB: EL 457.00 - STORAGE 2102

DESCRIPTION	TRIP	POLE	CKT No.	KILO-VOLT-AMPERES A	B	KILO-VOLT-AMPERES A	B	CKT No.	POLE	TRIP	DESCRIPTION
MOV-40860	20	2	1	0.31		0.31		2	2	20	MOV-40960
			3		0.31		0.31	4			
MOV-41060	20	2	5	0.31		0.31		6	2	20	MOV-41160
			7		0.31		0.31	8			
MOV-41260	20	2	9	0.31		0.31		10	2	20	MOV-41360
			11		0.31		0.31	12			
MOV-41460	20	2	13	0.31		0.86		14	2	20	MOV-10120
			15		0.31		0.86	16			
MOV-34090	20	2	17	0.41		0.00		18	2	20	SPARE
			19		0.41		0.00	20			
SPARE	20	2	21	0.00		0.00		22	2	20	SPARE
			23		0.00		0.00	24			
SPARE	20	1	25	0.00		0.00		26	1	20	SPARE
SPARE	20	1	27		0.00	0.00		28	1	20	SPARE
SPARE	20	1	29	0.00		0.00		30	1	20	SPARE
TOTAL				1.65	1.65	1.79	1.79	TOTAL			
				PHASE TOTAL (KVA)		TOTAL LOAD (KVA)					
				3.44	3.44	6.88					
				PHASE TOTAL (A)		TOTAL LOAD (A)					
				28.68	28.68	28.68					

208/120 VOLTS
3-PHASE, 4-WIRE
22 kAIC

PANEL NAME: LP-3-INSTR-TB
MAIN BREAKER : 100A P
PANEL RATING : 100A

TYPE: NEMA 4X
MOUNT: SURFACE
LOCATION: TB EL: 457.00 STORAGE 2102

DESCRIPTION	TRIP	POLE	CKT No.	KILO-VOLT-AMPERES A	B	C	KILO-VOLT-AMPERES A	B	C	CKT No.	POLE	TRIP	DESCRIPTION
AIT-41304	20	1	1	0.10			0.10			2	1	20	FIT-41305
AIT-41404	20	1	3		0.10			0.10		4	1	20	FIT-41405
AIT-42061	20	1	5			0.10			0.10	6	1	20	AIT-42062
FSL-10325	20	1	7	0.10			0.10			8	1	20	FSL-10345
FIT-46001	20	1	9		0.10			0.10		10	1	20	FIT-46002
DDC-04	20	1	11			1.20			1.20	12	1	20	BMS-03
DDC-12	20	1	13	1.20			1.20			14	1	20	DDC-09
ESD-07	20	1	15		0.12			0.12		16	1	20	ESD-02
LCP-AP45	20	1	17			0.12			0.12	18	1	20	LCP-AP50
LCP-AP55	20	1	19	0.12			0.24			20	1	20	LCP-AP60
OWS-FLT-A1	20	1	21		0.84			0.84		22	1	20	OWS-FLT-B1
ESD-01	20	1	23			0.12			0.12	24	1	20	ESD-03
ESD-04	20	1	25	0.12			0.12			26	1	20	ESD-05
ESD-06	20	1	27		0.12			0.00		28	1	20	SPARE
SPARE	20	1	29			0.00			0.00	30	1	20	SPARE
SPARE	20	1	31	0.00			0.00			32	1	20	SPARE
SPARE	20	1	33		0.00			0.00		34	1	20	SPARE
SPARE	20	1	35			0.00			0.00	36	1	20	SPARE
SPARE	20	1	37	0.00			0.00			38	1	20	SPARE
SPARE	20	1	39		0.00			0.00		40	1	20	SPARE
SPARE	20	1	41			0.00			0.00	42	1	20	SPARE
TOTAL				1.64	1.28	1.54	1.76	1.16	1.54	TOTAL			
				PHASE TOTAL (KVA)			TOTAL LOAD (KVA)						
				3.40	2.44	3.08	8.92						
				PHASE TOTAL (A)			TOTAL LOAD (A)						
				28.33	20.33	25.67	24.76						

208/120 VOLTS
3-PHASE, 4-WIRE
22 kAIC

PANEL NAME: LP-471-TB
MAIN BREAKER : 400A
PANEL RATING : 400A

TYPE: NEMA 4X
MOUNT: SURFACE
LOCATION: TB: EL 471.00 CORRIDOR 2209

DESCRIPTION	TRIP	POLE	CKT No.	KILO-VOLT-AMPERES A	B	C	KILO-VOLT-AMPERES A	B	C	CKT No.	POLE	TRIP	DESCRIPTION
LP-1-CHEM-TB	200	3	1	9.10			2.00			2	3	100	LP-2-CHEM-TB
			3		9.10			2.00		4			
			5			9.10			2.00	6			
LP-4-INSTR-TB	100	3	7	2.90			3.23			8	3	100	LP-5-INSTR-TB
			9		2.90			3.23		10			
			11			2.90			3.23	12			
LP-6-INSTR-TB	100	3	13	2.00			2.90			14	3	100	LP-1-PLUMB-TB
			15		2.00			2.90		16			
			17			2.00			2.90	18			
LP-LTG-471-TB	200	3	19	12.00			0.00			20	1	20	SPARE
			21		12.00			0.00		22	1	20	SPARE
			23			12.00			0.00	24	1	20	SPARE
SPARE	20	1	25	0.00			0.00			26	1	20	SPARE
SPARE	20	1	27		0.00			0.00		28	1	20	SPARE
SPARE	20	1	29			0.00			0.00	30	1	20	SPARE
SPARE	20	1	31	0.00			0.00			32	1	20	SPARE
SPARE	20	1	33		0.00			0.00		34	1	20	SPARE
SPARE	20	1	35			0.00			0.00	36	1	20	SPARE
SPARE	20	1	37	0.00			0.00			38	1	20	SPARE
SPARE	20	1	39		0.00			0.00		40	1	20	SPARE
SPARE	20	1	41			0.00			0.00	42	1	20	SPARE
TOTAL				26.0	26.0	26.0	8.1	8.1	8.1	TOTAL			
				PHASE TOTAL (KVA)			TOTAL LOAD (KVA)						
				34.1	34.1	34.1	102.4						
				PHASE TOTAL (A)			TOTAL LOAD (A)						
				284.42	284.42	284.42	284.2						

208/120 VOLTS
3-PHASE, 4-WIRE
22 kAIC

PANEL NAME: LP-1-CHEM-TB
MAIN BREAKER : 200A P
PANEL RATING : 200A

TYPE: NEMA 4X
MOUNT: SURFACE
LOCATION: TB: EL 471.00 CORRIDOR 2209

DESCRIPTION	TRIP	POLE	CKT No.	KILO-VOLT-AMPERES A	B	C	KILO-VOLT-AMPERES A	B	C	CKT No.	POLE	TRIP	DESCRIPTION
P-51120	20	2	1	0.25			0.25			2	2	20	P-51130
			3		0.25			0.25		4			
P-51140	20	2	5			0.25			0.25	6	2	20	P-51150
			7	0.25			0.25			8			
P-52120	20	2	9		0.25			0.25		10	2	20	P-52130
			11			0.25			0.25	12			
P-52140	20	2	13	0.25			0.25			14	2	20	P-52150
			15		0.25			0.25		16			
SKID-55120	40	1	17			3.00			0.50	18	1	20	MX-55112
SKID-55130	40	1	19	3.00			0.50			20	1	20	MX-55117
SKID-56120	20	1	21		0.50			0.50		22	1	20	SKID-56130
WE-55111	20	1	23			0.10			0.10	24	1	20	WE-55116
GENERATOR PANEL	100	3	25	5.00			0.00			26	1	20	SPARE
			27		5.00			0.00		28	1	20	SPARE
			29			5.00			0.00	30	1	20	SPARE
SPARE	20	1	31	0.00			0.00			32	1	20	SPARE
SPARE	20	1	33		0.00			0.00		34	1	20	SPARE
SPARE	20	1	35			0.00			0.00	36	1	20	SPARE
SPARE	20	1	37	0.00			0.00			38	1	20	SPARE
SPARE	20	1	39		0.00			0.00		40	1	20	SPARE
SPARE	20	1	41			0.00			0.00	42	1	20	SPARE
TOTAL				8.8	6.3	8.6	1.3	1.3	1.1	TOTAL			
				PHASE TOTAL (KVA)			TOTAL LOAD (KVA)						
				10.0	7.5	9.7	27.2						
				PHASE TOTAL (A)			TOTAL LOAD (A)						
				83.33	62.50	80.83	75.5						

208/120 VOLTS
3-PHASE, 4-WIRE
22 kAIC

PANEL NAME: LP-2-CHEM-TB
MAIN BREAKER : 100A P
PANEL RATING : 100A

TYPE: NEMA 4X
MOUNT: SURFACE
LOCATION: TB: EL 471.00 CORRIDOR 2209

DESCRIPTION	TRIP	POLE	CKT No.	KILO-VOLT-AMPERES A	B	C	KILO-VOLT-AMPERES A	B	C	CKT No.	POLE	TRIP	DESCRIPTION
P-52160	20	1	1	0.25			0.25			2	1	20	P-52170
	20	1	3		0.25			0.25		4	1	20	
P-52180	20	1	5			0.25			0.25	6	1	20	P-52190
	20	1	7	0.25			0.25			8	1	20	
P-53120	20	1	9		0.25			0.25		10	1	20	P-53130
	20	1	11			0.25			0.25	12	1	20	
P-53140	20	1	13	0.25			0.25			14	1	20	P-53150
	20	1	15		0.25			0.25		16	1	20	
P-54120	20	1	17			0.25			0.25	18	1	20	P-54130
	20	1	19	0.25			0.25			20	1	20	
P-54140	20	1	21		0.25			0.25		22	1	20	P-54150
	20	1	23			0.25			0.25	24	1	20	
SPARE	20	1	25	0.00			0.00			26	1	20	SPARE
SPARE	20	1	27		0.00			0.00		28	1	20	SPARE
SPARE	20	1	29			0.00			0.00	30	1	20	SPARE
SPARE	20	1	31	0.00			0.00			32	1	20	SPARE
SPARE	20	1	33		0.00			0.00		34	1	20	SPARE
SPARE	20	1	35			0.00			0.00	36	1	20	SPARE
SPARE	20	1	37	0.00			0.00			38	1	20	SPARE
SPARE	20	1	39		0.00			0.00		40	1	20	SPARE
SPARE	20	1	41			0.00			0.00	42	1	20	SPARE
TOTAL				1.0	1.0	1.0	1.0	1.0	1.0	TOTAL			
				PHASE TOTAL (KVA)			TOTAL LOAD (KVA)						
				2.0	2.0	2.0	6.0						
				PHASE TOTAL (A)			TOTAL LOAD (A)						
				16.67	16.67	16.67	16.7						

208/120 VOLTS
3-PHASE, 4-WIRE
22 kAIC

PANEL NAME: LP-4-INSTR-TB
MAIN BREAKER : 100A P
PANEL RATING : 100A

TYPE: NEMA 4X
MOUNT: SURFACE
LOCATION: TB: EL 471.00 CORRIDOR 2209

DESCRIPTION	TRIP	POLE	CKT No.	KILO-VOLT-AMPERES A	B	C	KILO-VOLT-AMPERES A	B	C	CKT No.	POLE	TRIP	DESCRIPTION
LCS-51000	20	1	1	0.60			0.10			2	1	20	LSH-51012
LSH-51022	20	1	3		0.10			0.10		4	1	20	LSH-51032
LSH-51042	20	1	5			0.10			0.10	6	1	20	LSH-51101
FSH-51102	20	1	7	0.10			0.10			8	1	20	LSH-51112
LCP-51120	20	1	9		0.50			0.50		10	1	20	LCP-51130
LCP-51140	20	1	11			0.50			0.50	12	1	20	LCP-51150
FSH-51001	20	1	13	0.10			0.60			14	1	20	LCS-56000
FSH-56102	20	1	15		0.10			0.10		16	1	20	LSH-56012
LSH-56022	20	1	17			0.10			0.10	18	1	20	LSH-56101
LSH-56112	20	1	19	0.10			0.50			20	1	20	LCP-56120
LCP-56130	20	1	21		0.50			0.60		22	1	20	LCS-53000
LSH-53012	20	1	23			0.10			0.10	24	1	20	LSH-53022
LCP-53120	20	1	25	0.50			0.50			26	1	20	LCP-53130
LCP-53140	20	1	27		0.50			0.50		28	1	20	LCP-53150
LSH-53101	20	1	29			0.10			0.10	30	1	20	FSH-53102
LSH-53112	20	1	31	0.10			0.10			32	1	20	FSH-51103
SPARE	20	1	33		0.00			0.00		34	1	20	SPARE
SPARE	20	1	35			0.00			0.00	36	1	20	SPARE
SPARE	20	1	37	0.00			0.00			38	1	20	SPARE
SPARE	20	1	39		0.00			0.00		40	1	20	SPARE
SPARE	20	1	41			0.00			0.00	42	1	20	SPARE
TOTAL				1.50	1.70	0.90	1.90	1.80	0.90	TOTAL			
				PHASE TOTAL (KVA)			TOTAL LOAD (KVA)						
				3.40	3.50	1.80	8.70						
				PHASE TOTAL (A)			TOTAL LOAD (A)						
				28.33	29.17	15.00	24.15						

1 2

File: C:\USERS\DKOLOKATHIS\DC\ACCDOCS\HAZEN AND SAWYER\90398-004_WEST PARISH FILTER WTF\PROJECT FILES\ELECE-2820 Saved by DKOLOKATHIS Save date: 4/21/2024 8:26 PM
PLOT DATE: 4/22/2024 9:44 AM BY: DKOLOKATHIS

REV	ISSUED FOR	DATE	BY
2	ADDENDUM NO. 5	APR 24	MWM
1	ADDENDUM NO. 3	MAR 24	MWM
0	ISSUED FOR BIDS	FEB 24	MWM

PROJECT ENGINEER: K. BARRETT
DESIGNED BY: A. PENA / D. SHAH
DRAWN BY: A. PENA / D. SHAH
CHECKED BY: G. MARKOU

IF THIS BAR DOES NOT MEASURE 1" THEN DRAWING IS NOT TO FULL SCALE
0 1/2" 1"

COMMONWEALTH OF MASSACHUSETTS
GEORGE MARKOU
ELECTRICAL
No. 50726
REGISTERED PROFESSIONAL ENGINEER
04/22/2024

Hazen
HAZEN AND SAWYER
100 GREAT MEADOW ROAD, SUITE 702
WETHERSFIELD, CT 06109

SPRINGFIELD WATER AND SEWER COMMISSION

WEST PARISH WATER TREATMENT PLANT

FILED SUB-BID

WATER TREATMENT BUILDING
ELECTRICAL
PANEL BOARD SCHEDULES - PROCESS AREA SHEET 4

DATE: FEBRUARY 2024
HAZEN NO.: 90398-004
CONTRACT NO.: 24-51
DRAWING NUMBER: E-2820

208/120 VOLTS
3-PHASE, 4-WIRE
22 kAIC

PANEL NAME: LP-5-INSTR-TB
MAIN BREAKER : 100A P
PANEL RATING : 100A

TYPE: NEMA 4X
MOUNT: SURFACE
LOCATION: TB: EL 471.00 CORRIDOR 2209

DESCRIPTION	TRIP	POLE	CKT No.	KILO-VOLT-AMPERES A	B	C	KILO-VOLT-AMPERES A	B	C	CKT No.	POLE	TRIP	DESCRIPTION
LCP-52120	20	1	1	0.50			0.50			2	1	20	LCP-52130
LCP-52140	20	1	3		0.50			0.50		4	1	20	LCP-52150
LSH-52117	20	1	5			0.10			0.50	6	1	20	LCP-52160
LCP-52170	20	1	7	0.50			0.50			8	1	20	LCP-52180
LCP-52190	20	1	9		0.50			0.60		10	1	20	LCS-52000
LSH-52012	20	1	11			0.10			0.10	12	1	20	LSH-52022
FSH-52101	20	1	13	0.10			0.10			14	1	20	LSH-52102
LSH-52112	20	1	15		0.10			0.10		16	1	20	FSH-51002
LCS-54000	20	1	17			0.60			0.12	18	1	20	LSH-54012
LSH-54022	20	1	19	0.10			0.10			20	1	20	LSH-54032
LSH-54042	20	1	21		0.10			0.10		22	1	20	LSH-54052
LSH-54101	20	1	23			0.10			0.10	24	1	20	LSH-54112
LCP-54120	20	1	25	0.50			0.50			26	1	20	LCP-54130
LCP-54140	20	1	27		0.50			0.50		28	1	20	LCP-54150
FSH-54102	20	1	29			0.10			0.29	30	1	20	RIO-MCC-1A
RIO-MCC-1D	20	1	31	0.28			0.00			32	1	20	SPARE
SPARE	20	1	33		0.00			0.00		34	1	20	SPARE
SPARE	20	1	35			0.00			0.00	36	1	20	SPARE
SPARE	20	1	37	0.00			0.00			38	1	20	SPARE
SPARE	20	1	39		0.00			0.00		40	1	20	SPARE
SPARE	20	1	41			0.00			0.00	42	1	20	SPARE
			TOTAL	1.98	1.70	1.00	1.70	1.80	1.11	TOTAL			
				PHASE TOTAL (KVA)			TOTAL LOAD (KVA)						
				3.68	3.50	2.11	9.29						
				PHASE TOTAL (A)			TOTAL LOAD (A)						
				30.67	29.17	17.58	25.79						

208/120 VOLTS
3-PHASE, 4-WIRE
22 kAIC

PANEL NAME: LP-6-INSTR-TB
MAIN BREAKER : 100A P
PANEL RATING : 100A

TYPE: NEMA 4X
MOUNT: SURFACE
LOCATION: TB: EL 471.00 CORRIDOR 2209

DESCRIPTION	TRIP	POLE	CKT No.	KILO-VOLT-AMPERES A	B	C	KILO-VOLT-AMPERES A	B	C	CKT No.	POLE	TRIP	DESCRIPTION
OWP-CHEM	20	1	1	0.84			0.00			2	1	20	SPARE
FSL-52105	20	1	3		0.12			0.12		4	1	20	FSL-52106
FSL-52107	20	1	5			0.12			0.12	6	1	20	FSL-52108
FSH-51003	20	1	7	0.10			0.10			8	1	20	FSH-51004
LSH-55101	20	1	9		0.10			0.10		10	1	20	FSH-55102
LCS-55112	20	1	11			0.50			0.50	12	1	20	LCS-55117
LCP-55120	20	1	13	0.50			0.50			14	1	20	LCP-55130
WIT-55111	20	1	15		0.12			0.12		16	1	20	WIT-55116
RIO-CHEM-A	20	1	17			0.46			0.46	18	1	20	RIO-CHEM-B
RIO-CHEM-C	20	1	19	0.35			0.12			20	1	20	FSL-42045
FSL-42046	20	1	21		0.12			0.12		22	1	20	FSL-42047
FSL-42048	20	1	23			0.12			0.00	24	1	20	SPARE
FIT-34009	20	1	25	0.10			0.10			26	1	20	LSH-54103
FSH-54104	20	1	27		0.10			0.12		28	1	20	LCP-AP35
LCP-AP40	20	1	29			0.24			0.00	30	1	20	SPARE
SPARE	20	1	31	0.00			0.00			32	1	20	SPARE
SPARE	20	1	33		0.00			0.00		34	1	20	SPARE
SPARE	20	1	35			0.00			0.00	36	1	20	SPARE
SPARE	20	1	37	0.00			0.00			38	1	20	SPARE
SPARE	20	1	39		0.00			0.00		40	1	20	SPARE
SPARE	20	1	41			0.00			0.00	42	1	20	SPARE
			TOTAL	1.89	0.56	1.44	0.82	0.58	1.08	TOTAL			
				PHASE TOTAL (KVA)			TOTAL LOAD (KVA)						
				2.71	1.14	2.52	6.37						
				PHASE TOTAL (A)			TOTAL LOAD (A)						
				22.58	9.50	21.00	17.68						

208/120 VOLTS
3-PHASE, 4-WIRE
22 kAIC

PANEL NAME: LP-1-PLUMB-TB
MAIN BREAKER : 100A P
PANEL RATING : 100A

TYPE: NEMA 4X
MOUNT: SURFACE
LOCATION: TB: EL 471.00 CORRIDOR 2209

DESCRIPTION	TRIP	POLE	CKT No.	KILO-VOLT-AMPERES A	B	C	KILO-VOLT-AMPERES A	B	C	CKT No.	POLE	TRIP	DESCRIPTION
FS (ROOM 2207)	20	1	1	0.04			0.04			2	1	20	FS (ROOM 2210)
FS (ROOM 2210)	20	1	3		0.04			0.04		4	1	20	FS (ROOM 2212)
FS (ROOM 2209)	20	1	5			0.04			0.04	6	1	20	FS (ROOM 2209)
FS (ROOM 2209)	20	1	7	0.04			0.04			8	1	20	FS (ROOM 2211)
FS (ROOM 2211)	20	1	9		0.04			0.04		10	1	20	FS (ROOM 2213)
FS (ROOM 2214)	20	1	11			0.04			0.04	12	1	20	FS (ROOM 2215)
FS (ROOM 2216)	20	1	13	0.04			0.10			14	1	20	TP-01 (ROOM 2202)
TP-02 (ROOM 2202)	20	1	15		0.10			0.10		16	1	20	TP-02 (ROOM 2206)
RCP-05	20	1	17			0.20			0.20	18	1	20	RCP-06
WH-06	30	2	19	3.00			0.10			20	1	20	EF-10
			21		3.00			0.24		22	1	20	METERING CHAMBER
LCS-EF-10	20	1	23			0.12			0.52	24	1	20	SP-03
SPARE	20	1	25	0.00			0.50			26	1	20	SPARE
SPARE	20	1	27		0.00			0.00		28	1	20	SPARE
SPARE	20	1	29			0.00			0.00	30	1	20	SPARE
SPARE	20	1	31	0.00			0.00			32	1	20	SPARE
SPARE	20	1	33		0.00			0.00		34	1	20	SPARE
SPARE	20	1	35			0.00			0.00	36	1	20	SPARE
SPARE	20	1	37	0.00			0.00			38	1	20	SPARE
SPARE	20	1	39		0.00			0.00		40	1	20	SPARE
SPARE	20	1	41			0.00			0.00	42	1	20	SPARE
			TOTAL	3.1	3.2	0.4	0.8	0.4	0.8	TOTAL			
				PHASE TOTAL (KVA)			TOTAL LOAD (KVA)						
				3.9	3.6	1.2	8.7						
				PHASE TOTAL (A)			TOTAL LOAD (A)						
				32.50	30.00	10.00	24.1						

208/120 VOLTS
3-PHASE, 4-WIRE
22 kAIC

PANEL NAME: LP-485-TB
MAIN BREAKER : 200A P
PANEL RATING : 200A

TYPE: NEMA 4X
MOUNT: SURFACE
LOCATION: TB: CENTRAL OPERATING 2300

DESCRIPTION	TRIP	POLE	CKT No.	KILO-VOLT-AMPERES A	B	C	KILO-VOLT-AMPERES A	B	C	CKT No.	POLE	TRIP	DESCRIPTION
			1	1.27			4.71			2			
LP-2-SAMPLE-TB	100	3	3		1.27			4.71		4	3	100	LP-7-INSTR-TB
			5			1.27			4.71	6			
			7	2.50			7.60			8			
LP-1-HV-TB	100	3	9		2.50			7.60		10	3	150	LP-LTG-485-TB
			11			2.50			7.60	12			
SPARE	20	1	13	0.00			0.00			14	1	20	SPARE
SPARE	20	1	15		0.00			0.00		16	1	20	SPARE
SPARE	20	1	17			0.00			0.00	18	1	20	SPARE
SPARE	20	1	19	0.00			0.00			20	1	20	SPARE
SPARE	20	1	21		0.00			0.00		22	1	20	SPARE
SPARE	20	1	23			0.00			0.00	24	1	20	SPARE
SPARE	20	1	25	0.00			0.00			26	1	20	SPARE
SPARE	20	1	27		0.00			0.00		28	1	20	SPARE
SPARE	20	1	29			0.00			0.00	30	1	20	SPARE
SPARE	20	1	31	0.00			0.00			32	1	20	SPARE
SPARE	20	1	33		0.00			0.00		34	1	20	SPARE
SPARE	20	1	35			0.00			0.00	36	1	20	SPARE
SPARE	20	1	37	0.00			0.00			38	1	20	SPARE
SPARE	20	1	39		0.00			0.00		40	1	20	SPARE
SPARE	20	1	41			0.00			0.00	42	1	20	SPARE
			TOTAL	3.8	3.8	3.8	12.3	12.3	12.3	TOTAL			
				PHASE TOTAL (KVA)			TOTAL LOAD (KVA)						
				16.1	16.1	16.1	48.2						
				PHASE TOTAL (A)			TOTAL LOAD (A)						
				134.00	134.00	134.00	133.9						

208/120 VOLTS
3-PHASE, 4-WIRE
22 kAIC

PANEL NAME: LP-2-SAMPLE-TB
MAIN BREAKER : 100A P
PANEL RATING : 100A

TYPE: NEMA 4X
MOUNT: SURFACE
LOCATION: TB: CENTRAL OPERATING 2300

DESCRIPTION	TRIP	POLE	CKT No.	KILO-VOLT-AMPERES A	B	C	KILO-VOLT-AMPERES A	B	C	CKT No.	POLE	TRIP	DESCRIPTION
			1	0.83			0.83			2			
P-10320	20	2	3		0.83			0.83		4	2	20	P-10340
STR-33050	20	1	5			0.49			0.01	6	1	20	T-34030
T-34040	20	1	7	0.01			0.00			8	1	20	SPARE
SPARE	20	1	9		0.00			0.00		10	1	20	SPARE
SPARE	20	1	11			0.00			0.00	12	1	20	SPARE
SPARE	20	1	13	0.00			0.00			14	1	20	SPARE
SPARE	20	1	15		0.00			0.00		16	1	20	SPARE
SPARE	20	1	17			0.00			0.00	18	1	20	SPARE
SPARE	20	1	19	0.00			0.00			20	1	20	SPARE
SPARE	20	1	21		0.00			0.00		22	1	20	SPARE
SPARE	20	1	23			0.00			0.00	24	1	20	SPARE
SPARE	20	1	25	0.00			0.00			26	1	20	SPARE
SPARE	20	1	27		0.00			0.00		28	1	20	SPARE
SPARE	20	1	29			0.00			0.00	30	1	20	SPARE
SPARE	20	1	31	0.00			0.00			32	1	20	SPARE
SPARE	20	1	33		0.00			0.00		34	1	20	SPARE
SPARE	20	1	35			0.00			0.00	36	1	20	SPARE
SPARE	20	1	37	0.00			0.00			38	1	20	SPARE
SPARE	20	1	39		0.00			0.00		40	1	20	SPARE
SPARE	20	1	41			0.00			0.00	42	1	20	SPARE
			TOTAL	0.84	0.83	0.49	0.83	0.83	0.01	TOTAL			
				PHASE TOTAL (KVA)			TOTAL LOAD (KVA)						
				1.67	1.66	0.50	3.83						
				PHASE TOTAL (A)			TOTAL LOAD (A)						
				13.92	13.83	4.17	10.63						

208/120 VOLTS
3-PHASE, 4-WIRE
22 kAIC

PANEL NAME: LP-7-INSTR-TB
MAIN BREAKER : 100A P
PANEL RATING : 100A

TYPE: NEMA 4X
MOUNT: SURFACE
LOCATION: TB: CENTRAL OPERATING 2300

DESCRIPTION	TRIP	POLE	CKT No.	KILO-VOLT-AMPERES A	B	C	KILO-VOLT-AMPERES A	B	C	CKT No.	POLE	TRIP	DESCRIPTION
FIT-34000	20	1	1	0.10			0.12			2	1	20	FIT-45001
FSL-10316	20	1	3		0.12			0.12		4	1	20	FSL-10317
RIO-DAF-A1	20	1	5			0.42			0.38	6	1	20	RIO-DAF-B1
RIO-DAF-A2	20	1	7	0.42			0.40			8	1	20	RIO-DAF-B2
RIO-FLT-A2	20	1	9		0.42			0.42		10	1	20	RIO-FLT-B2
RIO-MCC-2A	20	1	11			0.41			0.36	12	1	20	RIO-MCC-2D
DDC-02	20	1	13	1.20			0.12			14	1	20	LCS-EF-09
BMS-02	20	1	15		1.20			0.12		16	1	20	LCS-EF-07
LCS-EF-11	20	1	17			0.12			0.12	18	1	20	LCS-EF-12
DDC-03	20	1	19	1.20			0.12			20	1	20	LCS-SF-01
LCS-EF-01	20	1	21		0.12			0.12		22	1	20	LCS-EF-02
LCS-EF-03	20	1	23			0.12			0.12	24	1	20	LCS-EF-04
LCS-EF-05	20	1	25	0.12			0.12			26	1	20	LCS-EF-06
LCS-EF-08	20	1	27		0.12			1.20		28	1	20	DDC-01
OWS-DAF-A1	20	1	29			0.84			0.84	30	1	20	OWS-DAF-B1
OWS-FLT-A2	20	1	31	0.84			0.84			32	1	20	OWS-FLT-B2
OWS-BOP	20	1	33		0.84			0.00		34	1	20	SPARE
SPARE	20	1	35			0.00			0.00	36	1	20	SPARE
SPARE	20	1	37	0.00			0.00			38	1	20	SPARE
SPARE	20	1	39		0.00			0.00		40	1	20	SPARE
SPARE	20	1	41			0.00			0.00	42	1	20	SPARE
			TOTAL	3.88	2.82	1.91	1.72	1.98	1.82	TOTAL			
				PHASE TOTAL (KVA)			TOTAL LOAD (KVA)						
				5.60	4.80	3.73	14.13						
				PHASE TOTAL (A)			TOTAL LOAD (A)						
				46.67	40.00	31.08	39.22						

208/120 VOLTS
3-PHASE, 4-WIRE
22 kAIC

PANEL NAME: LP-1-HV-TB
MAIN BREAKER : 100A P
PANEL RATING : 100A

TYPE: NEMA 4X
MOUNT: SURFACE
LOCATION: TB: CENTRAL OPERATING 2300

DESCRIPTION	TRIP	POLE	CKT No.	KILO-VOLT-AMPERES A	B	C	KILO-VOLT-AMPERES A	B	C	CKT No.	POLE	TRIP	DESCRIPTION
HV-1	20	1	1	1.80			0.70			2	1	20	EF-11
HV-2	20	1	3		1.80			0.70		4	1	20	EF-12
HV-3	20	1	5			1.80			0.12	6	1	20	LCP-AP10
LCP-AP15	20	1	7	0.12			0.24			8	1	20	LCP-AP20
LCP-AP25	20	1	9		0.12			0.12		10	1	20	LCP-AP30
SPARE	20	1	11			0.00			0.00	12	1	20	SPARE
SPARE	20	1	13	0.00			0.00			14	1	20	SPARE
SPARE	20	1	15		0.00			0.00		16	1	20	SPARE
SPARE	20	1	17			0.00			0.00	18	1	20	SPARE
SPARE	20	1	19	0.00			0.00			20	1	20	SPARE
SPARE	20	1	21		0.00			0.00		22	1	20	SPARE
SPARE	20	1	23			0.00			0.00	24	1	20	SPARE
SPARE	20	1	25	0.00			0.00			26	1	20	SPARE
SPARE	20	1	27		0.00			0.00		28	1	20	SPARE
SPARE	20	1	29			0.00			0.00	30	1	20	SPARE
SPARE	20	1	31	0.00			0.00			32	1	20	SPARE
SPARE	20	1	33		0.00			0.00		34	1	20	SPARE
SPARE	20	1	35			0.00			0.00	36	1	20	SPARE
SPARE	20	1	37	0.00			0.00			38	1	20	SPARE
SPARE	20	1	39		0.00			0.00		40	1	20	SPARE
SPARE	20	1	41			0.00			0.00	42	1	20	SPARE
			TOTAL	1.92	1.92	1.80	0.94	0.82	0.12	TOTAL			
				PHASE TOTAL (KVA)			TOTAL LOAD (KVA)						
				2.86	2.74	1.92	7.52						
				PHASE TOTAL (A)			TOTAL LOAD (A)						
				23.83	22.83	16.00	20.87						

1 2

REV	ISSUED FOR	DATE	BY
2	ADDENDUM NO. 5	APR 24	MWM
1	ADDENDUM NO. 3	MAR 24	MWM
0	ISSUED FOR BIDS	FEB 24	MWM

PROJECT ENGINEER: K. BARRETT
DESIGNED BY: A. PENA / D. SHAH
DRAWN BY: A. PENA / D. SHAH
CHECKED BY: G. MARKOU

IF THIS BAR DOES NOT MEASURE 1" THEN DRAWING IS NOT TO FULL SCALE
0 1/2" 1"

COMMONWEALTH OF MASSACHUSETTS
GEORGE MARKOU
ELECTRICAL
No. 50726
REGISTERED PROFESSIONAL ENGINEER
04/22/2024

Hazen
HAZEN AND SAWYER
100 GREAT MEADOW ROAD, SUITE 702
WETHERSFIELD, CT 06109

SPRINGFIELD WATER AND SEWER COMMISSION

WEST PARISH WATER TREATMENT PLANT

FILED SUB-BID
WATER TREATMENT BUILDING
ELECTRICAL
PANEL BOARD SCHEDULES - PROCESS AREA SHEET 5

DATE: FEBRUARY 2024
HAZEN NO.: 90398-004
CONTRACT NO.: 24-51
DRAWING NUMBER: E-2821

File: C:\USERS\DKOLOKATHIS\DC\ACCDOCS\HAZEN AND SAWYER\90398-004_WEST PARISH FILTER WTP\PROJECT FILES\ELECE-2821 Saved by DKOLOKATHIS Save date: 4/21/2024 8:26 PM
PLOT DATE: 4/22/2024 9:45 AM BY: DKOLOKATHIS

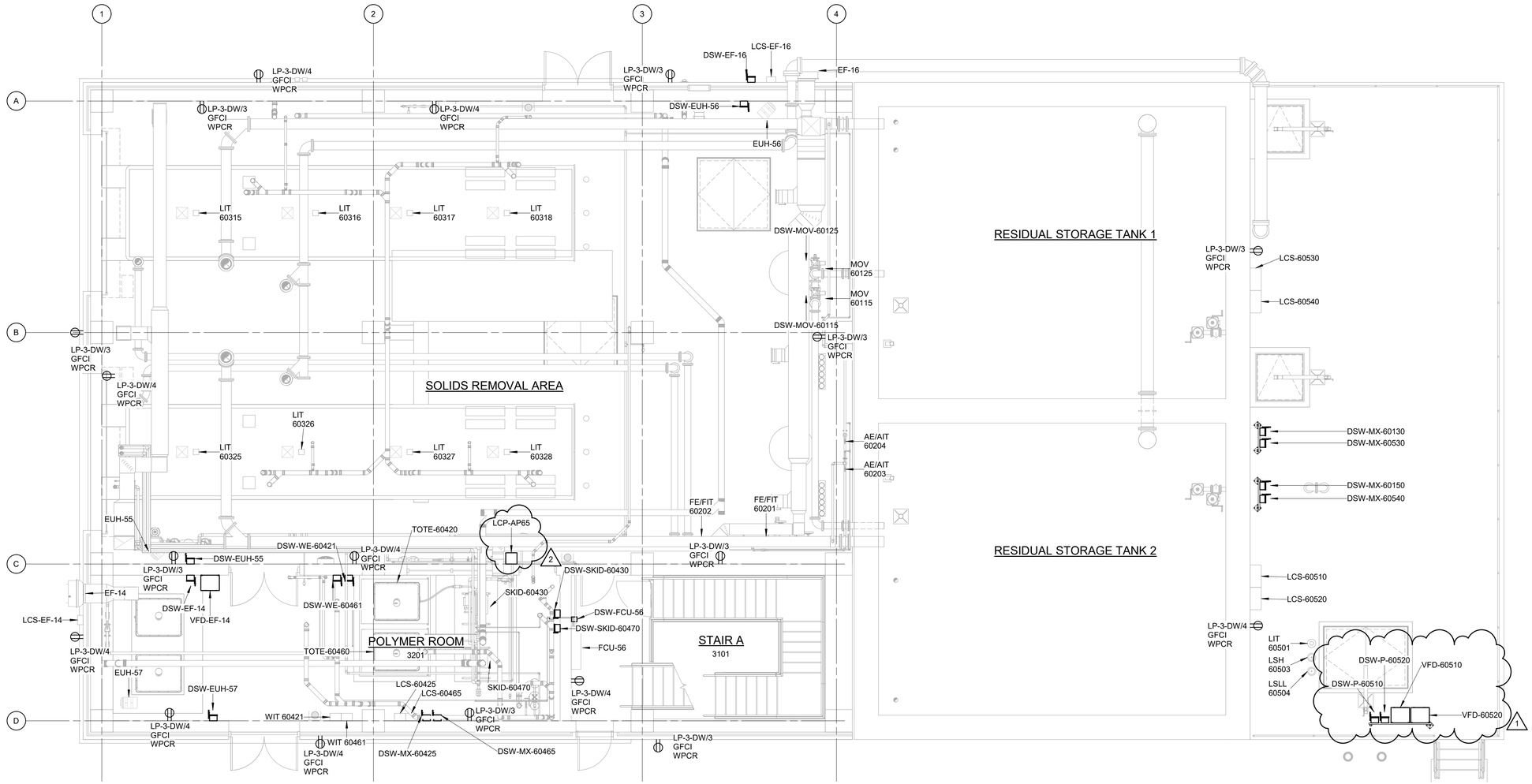

POWER PLAN AT 464.50

3/16" = 1'-0"

3/16" = 1'-0"

REV	ISSUED FOR	DATE	BY
2	ADDENDUM NO. 5	APR 24	MWM
1	ADDENDUM NO. 3	MAR 24	MWM
0	ISSUED FOR BIDS	FEB 24	MWM

PROJECT ENGINEER:	K. BARRETT
DESIGNED BY:	A. PENA/D. SHAH
DRAWN BY:	A. PENA/D. SHAH
CHECKED BY:	G. MARKOU
IF THIS BAR DOES NOT MEASURE 1" THEN DRAWING IS NOT TO FULL SCALE	0 1/2" 1"

COMMONWEALTH OF MASSACHUSETTS
GEORGE MARKOU
ELECTRICAL
No. 50726
REGISTERED PROFESSIONAL ENGINEER
04/22/2024

Hazen

HAZEN AND SAWYER
100 GREAT MEADOW ROAD, SUITE 702
WETHERSFIELD, CT 06109

SPRINGFIELD WATER AND SEWER COMMISSION

WEST PARISH WATER TREATMENT PLANT

FILED SUB-BID

DEWATERING BUILDING
ELECTRICAL
POWER PLAN AT EL 464.50

DATE:	FEBRUARY 2024
HAZEN NO.:	90398-004
CONTRACT NO.:	24-51
DRAWING NUMBER:	E-3201

Autodesk Docs://90398-004_West Parish Filter WTF/90398-004-DWB-E.rvt
4/21/2024 1:24:53 PM

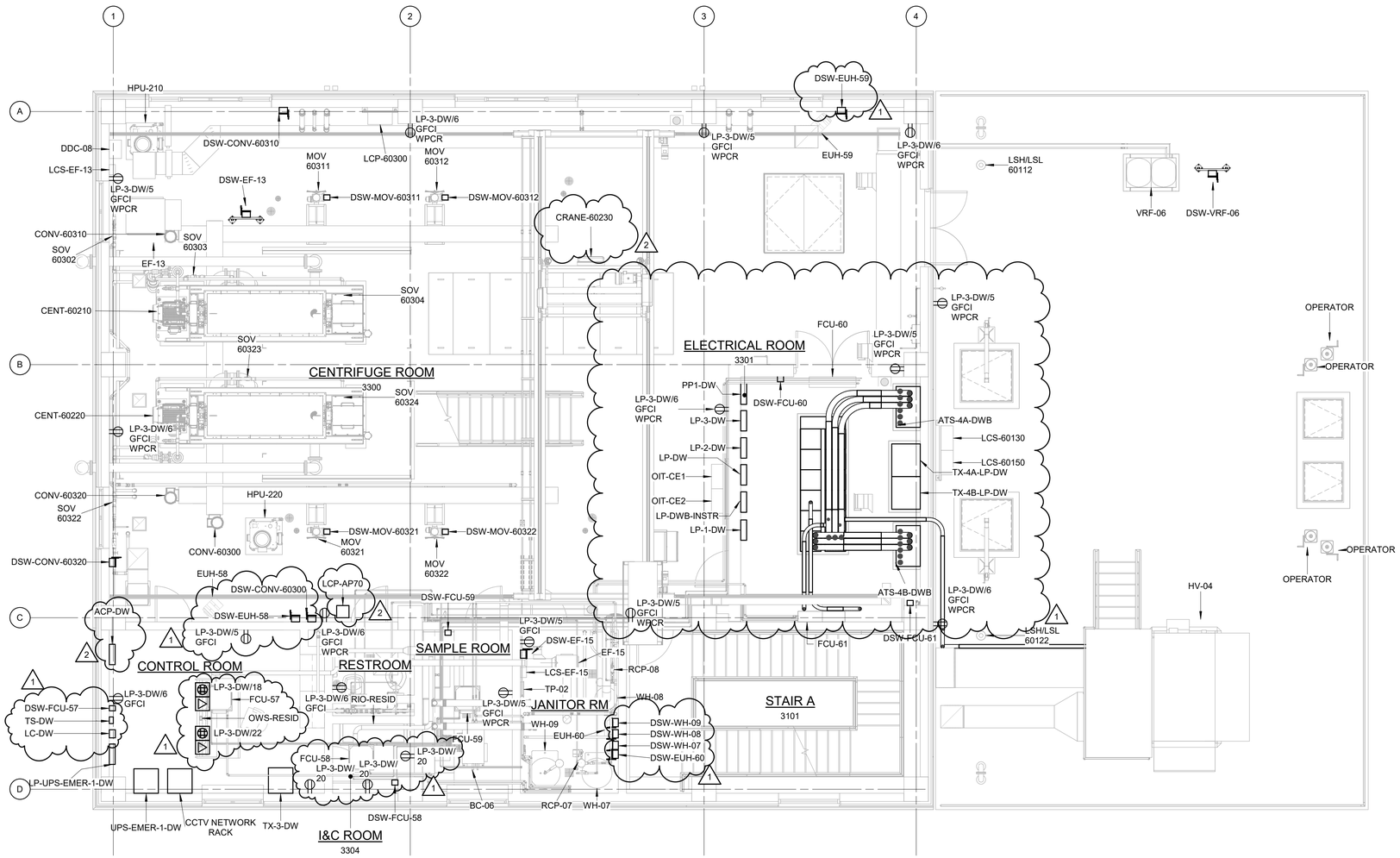

POWER PLAN AT EL 484.50

3/16" = 1'-0"

3/16" = 1'-0" 6 4 2 0 5'

REV	ISSUED FOR	DATE	BY
2	ADDENDUM NO. 5	APR 24	MWM
1	ADDENDUM NO. 3	MAR 24	MWM
0	ISSUED FOR BIDS	FEB 24	MWM

PROJECT ENGINEER:	K. BARRETT
DESIGNED BY:	A. PENA/D. SHAH
DRAWN BY:	A. PENA/D. SHAH
CHECKED BY:	G. MARKOU

IF THIS BAR DOES NOT MEASURE 1" THEN DRAWING IS NOT TO FULL SCALE 0 1/2" 1"

COMMONWEALTH OF MASSACHUSETTS
GEORGE MARKOU
ELECTRICAL
No. 50726
REGISTERED PROFESSIONAL ENGINEER
04/22/2024

Hazen

HAZEN AND SAWYER
100 GREAT MEADOW ROAD, SUITE 702
WETHERSFIELD, CT 06109

SPRINGFIELD WATER AND SEWER COMMISSION

WEST PARISH WATER TREATMENT PLANT

FILED SUB-BID

DEWATERING BUILDING
ELECTRICAL
POWER PLAN AT EL 484.50

DATE:	FEBRUARY 2024
HAZEN NO.:	90398-004
CONTRACT NO.:	24-51
DRAWING NUMBER:	E-3301

Autodesk Docs://90398-004_West Parish Filter WTF/90398-004-DWB-E.rvt
4/21/2024 2:37:32 PM

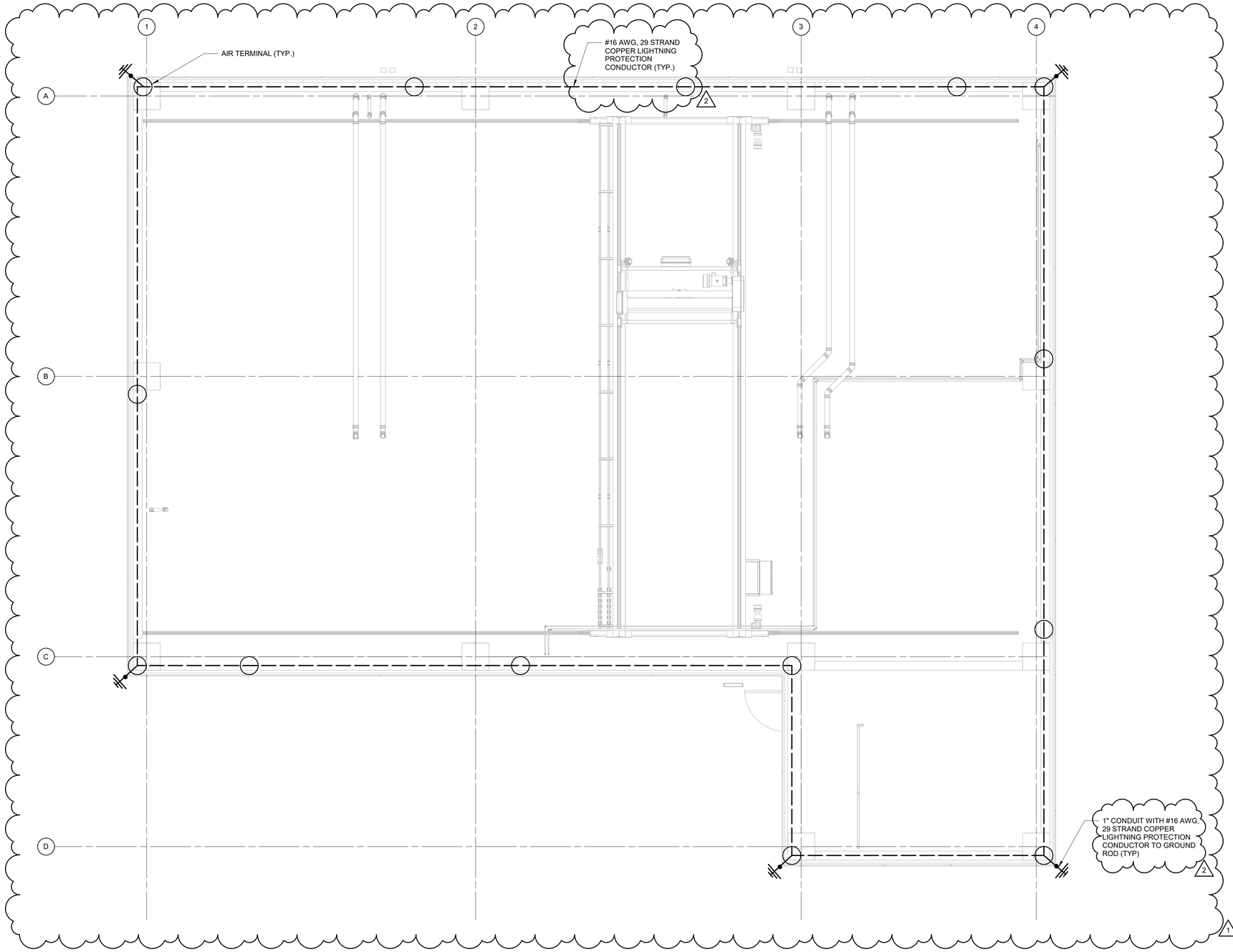

NOTES:

1. PROVIDE COMPLETE DESIGN, INSTALLATION, AND TESTING REQUIRED FOR UL MASTER LABEL CERTIFICATION AS SHOWN ON DRAWINGS AND PER SPECIFIATION 26 41 00.
2. FURNISH AND INSTALL 1" CONDUITS THROUGH CONCRETE PAD FOR LIGHTNING PROTECTION DOWN CONDUCTORS TO GROUND RING. ALL DOWN CONDUCTORS SHALL BE ROUTED DOWN INSIDE OF BUILDING.

LEGEND:

AIR TERMINAL

1

OVERALL LIGHTNING PROTECTION PLAN

1/4" = 1'-0"

1/4" = 1'-0" 1 0 1 2 3 7'

REV	ISSUED FOR	DATE	BY
2	ADDENDUM NO. 5	APR 24	MWM
1	ADDENDUM NO. 4	APR 24	MWM
0	ISSUED FOR BIDS	FEB 24	MWM

PROJECT ENGINEER:	K. BARRETT
DESIGNED BY:	A. PENA/D. SHAH
DRAWN BY:	A. PENA/D. SHAH
CHECKED BY:	G. MARKOU
IF THIS BAR DOES NOT MEASURE 1" THEN DRAWING IS NOT TO FULL SCALE	0 1/2" 1"

COMMONWEALTH OF MASSACHUSETTS
GEORGE MARKOU
ELECTRICAL
No. 50726
REGISTERED PROFESSIONAL ENGINEER

04/22/2024

Hazen

HAZEN AND SAWYER
100 GREAT MEADOW ROAD, SUITE 702
WETHERSFIELD, CT 06109

SPRINGFIELD WATER AND SEWER COMMISSION

WEST PARISH WATER TREATMENT PLANT

FILED SUB-BID

DEWATERING BUILDING
ELECTRICAL
OVERALL LIGHTING PROTECTION PROTECTION PLAN

DATE:	FEBRUARY 2024
HAZEN NO.:	90398-004
CONTRACT NO.:	24-51
DRAWING NUMBER:	E-3520

Autodesk Docs://90398-004_West Parish Filter WTF/90398-004-DWB-E.rvt
4/22/2024 5:30:24 PM

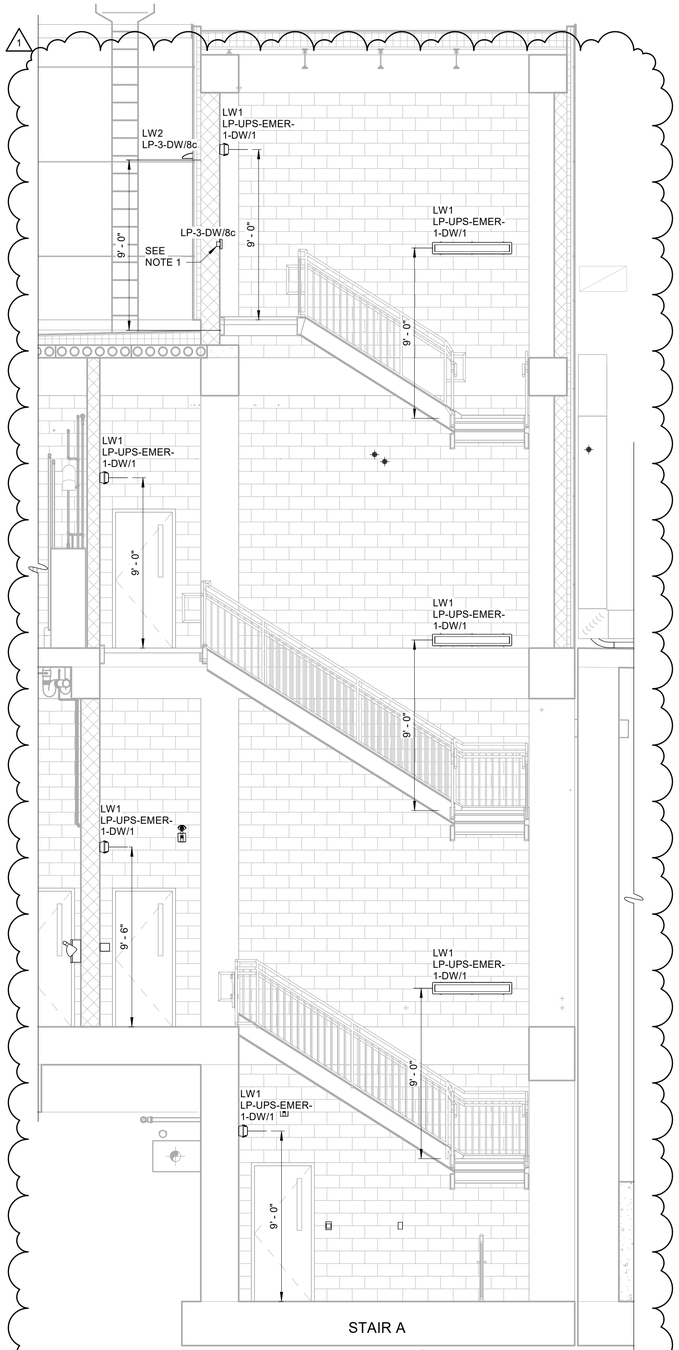

SECTION A
1/4" = 1'-0" E-3121

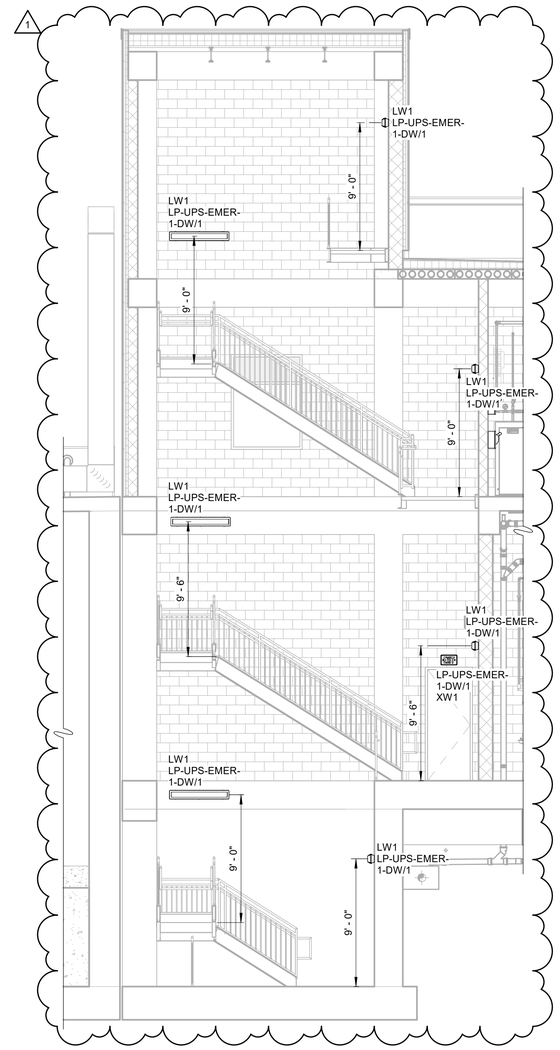

SECTION B
3/16" = 1'-0" E-3121

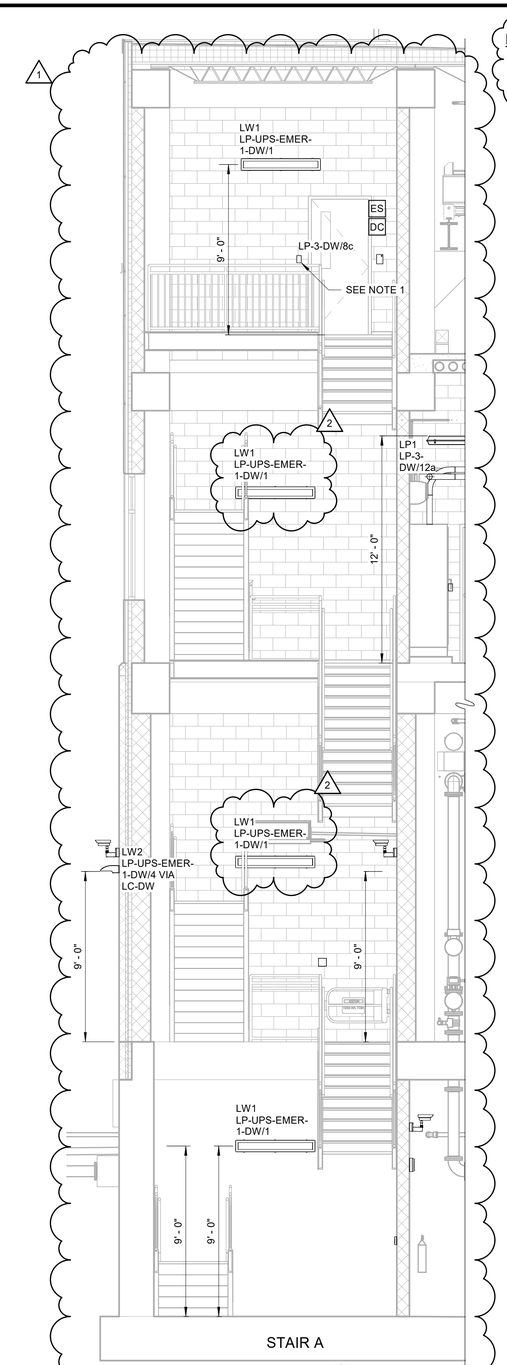

SECTION C
1/4" = 1'-0" E-3121

NOTES:

1. LIGHT SWITCH TO OPERATE EXTERIOR FIXTURE LW2 ONLY. ALL OTHER LIGHT FIXTURES ON THIS CIRCUIT ARE UNSWITCHED.

REV	ISSUED FOR	DATE	BY
2	ADDENDUM NO. 5	APR 24	MWM
1	ADDENDUM NO. 3	MAR 24	MWM
0	ISSUED FOR BIDS	FEB 24	MWM

PROJECT ENGINEER:	K. BARRETT
DESIGNED BY:	A. PENA/D. SHAH
DRAWN BY:	M. DREN
CHECKED BY:	G. MARKOU
IF THIS BAR DOES NOT MEASURE 1" THEN DRAWING IS NOT TO FULL SCALE	0 1/2" 1"

COMMONWEALTH OF MASSACHUSETTS
GEORGE MARKOU
ELECTRICAL
No. 50726
REGISTERED PROFESSIONAL ENGINEER
04/22/2024

Hazen

HAZEN AND SAWYER
100 GREAT MEADOW ROAD, SUITE 702
WETHERSFIELD, CT 06109

SPRINGFIELD WATER AND SEWER COMMISSION

WEST PARISH WATER TREATMENT PLANT

FILED SUB-BID

DEWATERING BUILDING
ELECTRICAL
SECTIONS

DATE:	FEBRUARY 2024
HAZEN NO.:	90398-004
CONTRACT NO.:	24-51
DRAWING NUMBER:	E-3701

Autodesk Docs://90398-004_West Parish Filter WTF/90398-004-DWB-E.rvt
4/17/2024 5:22:12 PM

480 VOLTS, 60 HZ
3 PHASE, 3 WIRE
42 kAIC

POWER PANEL PP-1-DW
MAIN BREAKER : 200A 3P
PANEL RATING : 200A 3P

TYPE: NEMA 12
MOUNT: SURFACE
LOCATION: DWB ELECT RM 3301

DESCRIPTION	TRIP	POLE	CKT No.	KILO-VOLT-AMPERES A	KILO-VOLT-AMPERES B	KILO-VOLT-AMPERES C	KILO-VOLT-AMPERES A	KILO-VOLT-AMPERES B	KILO-VOLT-AMPERES C	CKT No.	POLE	TRIP	DESCRIPTION
MOV-60115	20	3	1	0.40			0.40			2	3	20	MOV-60125
			3		0.40			0.40		4			
			5			0.40			0.40	6			
ROLL-UP DOOR (DWB - WEST SIDE)	20	3	7	1.38			1.38			8	3	20	ROLL-UP DOOR (DWB - WEST SIDE)
			9		1.38			1.38		10			
			11			1.38			1.38	12			
LCP-60300	40	3	13	6.93			0.40			14	3	20	MOV-60311
			15		6.93			0.40		16			
			17			6.93			0.40	18			
MOV-60312	20	3	19	0.40			0.40			20	3	20	MOV-60321
			21		0.40			0.40		22			
			23			0.40			0.40	24			
MOV-60322	20	3	25	0.40			0.40			26	3	20	CENT-60211 (DIVERTER GATE 1)
			27		0.40			0.40		28			
			29			0.40			0.40	30			
CENT-60212 (DIVERTER GATE 2)	20	3	31	0.40			0.00			32	3	20	SPARE
			33		0.40			0.00		34			
			35			0.40			0.00	36			
SPARE	20	3	37	0.00			0.00			38	3	20	SPARE
			39		0.00			0.00		40			
			41			0.00			0.00	42			
			TOTAL	9.5	9.1	9.1	3.0	2.6	2.6	TOTAL			
				PHASE TOTAL			TOTAL LOAD (KVA)						
				12.5	11.7	11.7	35.9						
							TOTAL LOAD (A)						
							43.1						

NOTE: DUAL BREAKER PANEL

208/120 VOLTS
3-PHASE, 4-WIRE
22 kAIC (MINIMUM)

PANEL NAME: LP-DW
MAIN BREAKER : 200A P
PANEL RATING : 200A

TYPE: NEMA 12
MOUNT: SURFACE
LOCATION: DWB ELECT RM 3301

DESCRIPTION	TRIP	POLE	CKT No.	KILO-VOLT-AMPERES A	KILO-VOLT-AMPERES B	KILO-VOLT-AMPERES C	KILO-VOLT-AMPERES A	KILO-VOLT-AMPERES B	KILO-VOLT-AMPERES C	CKT No.	POLE	TRIP	DESCRIPTION
LP-1-DW	100	3	1	2.35			4.60			2	3	100	LP-2-DW
			3		2.35			4.60		4			
			5			2.35			4.60	6			
LP-3-DW	100	3	7	5.02			1.00			8	3	100	LP-INSTR-DW
			9		5.02			1.00		10			
			11			5.02			1.00	12			
LP-UPS-EMER-1	100	3	13	0.62			0.00			14	3	100	SPARE
			15		0.62			0.00		16			
			17			0.62			0.00	18			
SPARE	20	1	19	0.00			0.00			20	1	20	SPARE
SPARE	20	1	21		0.00			0.00		22	1	20	SPARE
SPARE	20	1	23			0.00			0.00	24	1	20	SPARE
SPARE	20	1	25	0.00			0.00			26	1	20	SPARE
SPARE	20	1	27		0.00			0.00		28	1	20	SPARE
SPARE	20	1	29			0.00			0.00	30	1	20	SPARE
SPARE	20	1	31	0.00			0.00			32	1	20	SPARE
SPARE	20	1	33		0.00			0.00		34	1	20	SPARE
SPARE	20	1	35			0.00			0.00	36	1	20	SPARE
SPARE	20	1	37	0.00			0.00			38	1	20	SPARE
SPARE	20	1	39		0.00			0.00		40	1	20	SPARE
SPARE	20	1	41			0.00			0.00	42	1	20	SPARE
			TOTAL	7.99	7.99	7.99	5.60	5.60	5.60	TOTAL			
				PHASE TOTAL (KVA)			TOTAL LOAD (KVA)						
				13.59	13.59	13.59	40.77						
				PHASE TOTAL (A)			TOTAL LOAD (A)						
				113.25	113.25	113.25	113.17						

NOTE: DUAL BREAKER PANEL

208/120 VOLTS
3-PHASE, 4-WIRE
22 kAIC (MINIMUM)

PANEL NAME: LP-1-DW
MAIN BREAKER : 100A P
PANEL RATING : 100A

TYPE: NEMA 12
MOUNT: SURFACE
LOCATION: DWB ELECT RM 3301

DESCRIPTION	TRIP	POLE	CKT No.	KILO-VOLT-AMPERES A	KILO-VOLT-AMPERES B	KILO-VOLT-AMPERES C	KILO-VOLT-AMPERES A	KILO-VOLT-AMPERES B	KILO-VOLT-AMPERES C	CKT No.	POLE	TRIP	DESCRIPTION
MX-60425	20	1	1	0.50			0.00			2	1	40	SKID-60470 (STANDBY)
SKID-60430	40	1	3		3.00			0.19		4	1	20	P-60410
P-60450 (STANDBY)	20	1	5			0.00			0.50	6	1	20	MX-60465
WE-60421	20	1	7	0.10			0.10			8	1	20	WE-60461
CCP-60210	30	1	9		2.40			0.00		10	1	30	CCP-60220 (STANDBY)
SOV-60302	20	1	11			0.03			0.03	12	1	20	SOV-60303
SOV-60304	20	1	13	0.03			0.03			14	1	20	SOV-60322
SOV-60323	20	1	15		0.03			0.03		16	1	20	SOV-60324
SPARE	20	1	17			0.00			0.00	18	1	20	SPARE
SPARE	20	1	19	0.00			0.00			20	1	20	SPARE
SPARE	20	1	21		0.00			0.00		22	1	20	SPARE
SPARE	20	1	23			0.00			0.00	24	1	20	SPARE
SPARE	20	1	25	0.00			0.00			26	1	20	SPARE
SPARE	20	1	27		0.00			0.00		28	1	20	SPARE
SPARE	20	1	29			0.00			0.00	30	1	20	SPARE
SPARE	20	1	31	0.00			0.00			32	1	20	SPARE
SPARE	20	1	33		0.00			0.00		34	1	20	SPARE
SPARE	20	1	35			0.00			0.00	36	1	20	SPARE
SPARE	20	1	37	0.00			0.00			38	1	20	SPARE
SPARE	20	1	39		0.00			0.00		40	1	20	SPARE
SPARE	20	1	41			0.00			0.00	42	1	20	SPARE
			TOTAL	0.63	5.43	0.03	0.13	0.22	0.53	TOTAL			
				PHASE TOTAL (KVA)			TOTAL LOAD (KVA)						
				0.76	5.65	0.56	6.97						
				PHASE TOTAL (A)			TOTAL LOAD (A)						
				6.33	47.08	4.67	19.35						

208/120 VOLTS
3-PHASE, 4-WIRE
22 kAIC (MINIMUM)

PANEL NAME: LP-2-DW
MAIN BREAKER : 100A P
PANEL RATING : 100A

TYPE: NEMA 12
MOUNT: SURFACE
LOCATION: DWB ELECT RM 3301

DESCRIPTION	TRIP	POLE	CKT No.	KILO-VOLT-AMPERES A	KILO-VOLT-AMPERES B	KILO-VOLT-AMPERES C	KILO-VOLT-AMPERES A	KILO-VOLT-AMPERES B	KILO-VOLT-AMPERES C	CKT No.	POLE	TRIP	DESCRIPTION
FCU-57	20	2	1	0.05			0.05			2	2	20	FCU-58
			3		0.05			0.05		4			
FCU-59	20	2	5			0.05			0.05	6	2	20	FCU-60
			7	0.05			0.05			8			
FCU-61	20	2	9		0.05			0.05		10	2	20	FCU-56
			11			0.05			0.05	12			
BC-06	20	2	13	0.65			0.18			14	1	20	RCP-06
			15		0.65			0.18		16	1	20	RCP-07
HV-4	20	1	17			1.80			0.10	18	1	20	TP-02
WH-08	40	2	19	3.00			0.46			20	1	20	EF-15
			21		3.00			0.18		22	1	20	EF-16
SPARE	20	1	23			0.00			1.20	24	1	20	DDC-14
LCS-EF-13	20	1	25	0.12			1.20			26	1	20	DDC-08
LCS-EF-14	20	1	27		0.12			0.12		28	1	20	LCS-EF-15
LCS-EF-16	20	1	29			0.12			0.04	30	1	20	FS (RM 3201)
FS (RM 3305)	20	1	31	0.04			0.00			32	1	20	SPARE
SPARE	20	1	33		0.00			0.00		34	1	20	SPARE
SPARE	20	1	35			0.00			0.00	36	1	20	SPARE
SPARE	20	1	37	0.00			0.00			38	1	20	SPARE
SPARE	20	1	39		0.00			0.00		40	1	20	SPARE
SPARE	20	1	41			0.00			0.00	42	1	20	SPARE
			TOTAL	3.91	3.87	2.02	1.94	0.58	1.44	TOTAL			
				PHASE TOTAL (KVA)			TOTAL LOAD (KVA)						
				5.85	4.45	3.46	13.76						
				PHASE TOTAL (A)			TOTAL LOAD (A)						
				48.75	37.08	28.83	38.19						

208/120 VOLTS
3-PHASE, 4-WIRE
22 kAIC (MINIMUM)

PANEL NAME: LP-3-DW
MAIN BREAKER : 100A P
PANEL RATING : 100A

TYPE: NEMA 12
MOUNT: SURFACE
LOCATION: DWB ELECT RM 3301

DESCRIPTION	TRIP	POLE	CKT No.	KILO-VOLT-AMPERES A	KILO-VOLT-AMPERES B	KILO-VOLT-AMPERES C	KILO-VOLT-AMPERES A	KILO-VOLT-AMPERES B	KILO-VOLT-AMPERES C	CKT No.	POLE	TRIP	DESCRIPTION
DWB RECP - EL. 450.00	20	1	1		0.54		0.54			2	1	20	DWB RECP - EL. 450.00
DWB RECP - EL. 464.50	20	1	3			1.62		1.62		4	1	20	DWB RECP - EL. 464.50
DWB RECP - EL. 484.50	20	1	5			1.62			1.62	6	1	20	DWB RECP - EL. 484.50
DWB LTG - SOLIDS REMOVAL	20	1	7	1.20			0.73			8	1	20	DWB LTG - EXTERIOR
DWB LTG - PUMP ROOM	20	1	9		0.47			0.95		10	1	20	DWB LTG - CENT ROOM
DWB LTG - POLYMER ROOM	20	1	11			0.20			0.41	12	1	20	DWB LTG - ELEC ROOM
SPARE	20	1	13	0.00			0.10			14	1	20	DWB LTG - SAMPLE & JAN ROOMS
DWB LTG - RESTROOM	20	1	15		0.20			0.11		16	1	20	DWB LTG - CONTROL ROOM
WAST WASHWATER TANK - REC	20	1	17			0.36			1.00	18	1	20	DWB RECP - CONTROL ROOM
WAST WASHWATER TANK - LTG	20	1	19	0.22			0.54			20	1	20	DWB RECP - CTRL AND I&C RMS
SPARE	20	1	21		0.00			1.00		22	1	20	DWB RECP - CONTROL ROOM
SPARE	20	1	23			0.00			0.00	24	1	20	SPARE
SPARE	20	1	25	0.00			0.00			26	1	20	SPARE
SPARE	20	1	27		0.00			0.00		28	1	20	SPARE
SPARE	20	1	29			0.00			0.00	30	1	20	SPARE
SPARE	20	1	31	0.00			0.00			32	1	20	SPARE
SPARE	20	1	33		0.00			0.00		34	1	20	SPARE
SPARE	20	1	35			0.00			0.00	36	1	20	SPARE
SPARE	20	1	37	0.00			0.00			38	1	20	SPARE
SPARE	20	1	39		0.00			0.00		40	1	20	SPARE
SPARE	20	1	41			0.00			0.00	42	1	20	SPARE
			TOTAL	1.96	2.29	2.18	1.91	3.68	3.03	TOTAL			
				PHASE TOTAL (KVA)			TOTAL LOAD (KVA)						
				3.87	5.97	5.21	15.06						
				PHASE TOTAL (A)			TOTAL LOAD (A)						
				32.29	49.76	43.43	41.80						

208/120 VOLTS
3-PHASE, 4-WIRE
22 kAIC (MINIMUM)

PANEL NAME: LP-INSTR-DW
MAIN BREAKER : 100A P
PANEL RATING : 100A

TYPE: NEMA 12
MOUNT: SURFACE
LOCATION: DWB ELECT RM 3301

DESCRIPTION	TRIP	POLE	CKT No.	KILO-VOLT-AMPERES A	KILO-VOLT-AMPERES B	KILO-VOLT-AMPERES C	KILO-VOLT-AMPERES A	KILO-VOLT-AMPERES B	KILO-VOLT-AMPERES C	CKT No.	POLE	TRIP	DESCRIPTION
TSH-60140	20	1	1	0.10			0.10			2	1	20	TSH-60160
FIT-60201	20	1	4		0.10			0.10		4	1	20	FIT-60202
FSH-60301	20	1	6			0.10			0.10	6	1	20	FSH-60401
LCS-60425	20	1	8	0.10			0.10			8	1	20	LCS-60465
WIT-60421	20	1	10		0.12			0.12		10	1	20	WIT-60461
LCP-60430	20	1	12			0.10			0.10	12	1	20	LCP-60470
RIO-RESIDUALS	20	1	14	0.40			0.10			14	1	20	AIT-60203
AIT-60204	20	1	16		0.10			0.24		16	1	20	LCP-AP65
LCP-AP70	20	1	18			0.12			0.00	18	1	20	SPARE
OWP-RESID	20	1	20	0.84			0.00			20	1	20	SPARE
SPARE	20	1	22		0.00			0.00		22	1	20	SPARE
SPARE	20	1	24			0.00			0.00	24	1	20	SPARE
SPARE	20	1	26	0.00			0.00			26	1	20	SPARE
SPARE	20	1	28		0.00			0.00		28	1	20	SPARE
SPARE	20	1	30			0.00			0.00	30	1	20	SPARE
SPARE	20	1	32	0.00			0.00			32	1	20	SPARE
SPARE	20	1	34		0.00			0.00		34	1	20	SPARE
SPARE	20	1	36			0.00			0.00	36	1	20	SPARE
SPARE	20	1	38	0.00			0.00			38	1	20	SPARE
SPARE	20	1	40		0.00			0.00		40	1	20	SPARE
SPARE	20	1	42			0.00			0.00	42	1	20	SPARE
			TOTAL	1.44	0.32	0.32	0.30	0.46	0.20	TOTAL			
				PHASE TOTAL (KVA)			TOTAL LOAD (KVA)						
				1.74	0.78	0.52	3.04						
				PHASE TOTAL (A)			TOTAL LOAD (A)						
				14.50	6.50	4.33	8.44						

240/120 VOLTS
1-PHASE, 3-WIRE
22kAIC (MINIMUM)

PANEL NAME: LP-UPS-EMER-1-DW
MAIN BREAKER : 100A 2P
PANEL RATING : 100A

TYPE: NEMA 12
MOUNT: SURFACE
LOCATION: DWB: EL: 484.50 I&C ROOM

DESCRIPTION	TRIP	POLE	CKT No.	KILO-VOLT-AMPERES A	KILO-VOLT-AMPERES B	KILO-VOLT-AMPERES A	KILO-VOLT-AMPERES B	CKT No.	POLE	TRIP	DESCRIPTION
EM/EXIT LTG - EL. 450.00, STAIR A	20	1	1	0.61		0.42		2	1	20	EM/EXIT LTG - EL. 464.50
EM/EXIT LTG - EL. 484.50	20	1	3		0.41		0.43	4	1	20	DWB LTG - EXTERIOR
ACP-DW	20	1	5	0.50		0.00		6	1	20	SPARE
SPARE	20	1	7		0.00		0.00	8	1	20	SPARE
SPARE	20	1	9	0.00		0.00		10	1	20	SPARE
SPARE	20	1	11		0.00		0.00	12	1	20	SPARE
SPARE	20	1	13	0.00		0.00		14	1	20	SPARE
SPARE	20	1	15		0.00		0.00	16	1	20	SPARE
SPARE	20	1	17	0.00		0.00		18	1	20	SPARE
			TOTAL	1.11	0.41	0.42	0.43	TOTAL			
				PHASE TOTAL (KVA)		TOTAL LOAD (KVA)					
				1.53	0.83	2.36					
				PHASE TOTAL (A)		TOTAL LOAD (A)					
				12.73	6.94	9.84					

1 2

REV	ISSUED FOR	DATE	BY
2	ADDENDUM NO. 5	APR 24	MWM
1	ADDENDUM NO. 3	MAR 24	MWM
0	ISSUED FOR BIDS	FEB 24	MWM

PROJECT ENGINEER: K. BARRETT
DESIGNED BY: A. PENA / D. SHAH
DRAWN BY: A. PENA / D. SHAH
CHECKED BY: G. MARKOU

IF THIS BAR DOES NOT MEASURE 1" THEN DRAWING IS NOT TO FULL SCALE
0 1/2" 1"

COMMONWEALTH OF MASSACHUSETTS
GEORGE MARKOU
ELECTRICAL
No. 50726
REGISTERED PROFESSIONAL ENGINEER
04/22/2024

Hazen
HAZEN AND SAWYER
100 GREAT MEADOW ROAD, SUITE 702
WETHERSFIELD, CT 06109

SPRINGFIELD WATER AND SEWER COMMISSION

WEST PARISH WATER TREATMENT PLANT

FILED SUB-BID

DEWATERING BUILDING
ELECTRICAL
PANEL BOARD SCHEDULES

DATE: FEBRUARY 2024
HAZEN NO.: 90398-004
CONTRACT NO.: 24-51
DRAWING NUMBER: E-3804

File: C:\USERS\DKOLOKATHIS\DCACCDOCS\HAZEN AND SAWYER\90398-004_WEST PARISH FILTER WTF\PROJECT FILES\ELEC\E-3804 Saved by DKOLOKATHIS Save date: 4/21/2024 8:26 PM
PLOT DATE: 4/22/2024 9:45 AM BY: DKOLOKATHIS

ATTACHMENT C – 00 40 00 FORMS FOR GENERAL BID

BID NO. 24-51; WEST PARISH WATER TREATMENT PLANT

SUB-BID OPENING DATE: 2:00 P.M. APRIL 30, 2024

GC OPENING DATE: 2:00 P.M. JUNE 4, 2024

SECTION 00 40 00

FORM FOR GENERAL BIDS[1]

TO: Theo G. Theocles, Esq.
Director of Legal Affairs/CPO
Springfield Water and Sewer Commission
250 M Street Extension
Agawam, MA 01101

A. The undersigned:

_____
(Please type or print the business name of the bidding firm)

Proposes to furnish all labor and materials required for completing, in accordance with the hereinafter described Drawings, Specifications, and Addenda, all work specified in of the Specifications and in any Drawings specified in any such Section of the Bid titled: **West Parish Water Treatment Plant**, prepared by: **Hazen & Sawyer, Inc., 100 Great Meadow Rd., Suite 702, Wethersfield, CT 06109**, for the price below, subject to additions and deductions according to the terms of the specifications:

B. This bid includes addenda numbered _____ , _____ , _____ , _____ , _____, _____ ,

___, _____, _____, _____, _____, _____.

C. The proposed contract price is:

[1] Addendum No.5

SRF ELIGIBLE BASE BID ITEMS

Item No.	Estimated Quantity	Units	Description of the Work and Unit Price Bid Written in Words and Numbers	Amount
011100.1	1	LUMP SUM	General Construction, the lump sum price of _____ Dollars ($ _____) lump sum	$ _____
011100.2	1	LUMP SUM	Mobilization, the lump sum price of _____ Dollars ($ _____) lump sum	$ _____
011100.3	1	LUMP SUM	Demobilization, the lump sum price of _____ Dollars ($ _____) lump sum	$ _____
310001.1	3,700	CUBIC YARD	Rock and Boulder Excavation, the unit price of _____ Dollars ($ _____) per cubic yard	$ _____
310001.2	6,500	CUBIC YARD	Additional Excavation and Select Fill Replacement, the unit price of _____ Dollars ($ _____) per cubic yard	$ _____

SRF INELIGIBLE BASE BID ITEMS

Item No.	Estimated Quantity	Units	Description of the Work and Unit Price Bid Written in Words and Numbers	Amount
014100.1	1	ALLOWANCE	City of Westfield Building Permit Fees, the lump sum price of Thirty-Five Thousand Dollars Dollars ($35,000.00) allowance	$ 35,000.00
014100.2	1	ALLOWANCE	City of Westfield Conservation Commission Fee, the lump sum price of Seven Thousand Five Hundred Dollars Dollars ($7,500.00) allowance	$ 7,500.00

Total amount of Base Bid based on Engineer's estimate of quantities for Items 011100.1 through 400524.4 inclusive and the work on the Filed Sub-Bidders (in words) :

_____

_____ Dollars

(In figures) ($ _____).

For Alternate No. 1: Add _____

_____ Dollars ($ _____)

OR Deduct _____

_____ Dollars ($ _____)

For Alternate No. 2: Add _____

_____ Dollars ($ _____)

OR Deduct _____

_____ Dollars ($ _____)

D. The subdivision of the proposed contract price is as follows:

Item D. 1: The work of the General Contractor _____

Dollars ($ _____)

Item D. 2: The work of the Filed Sub-Bidders: _____

Dollars ($ _____)

Sub-Trade	Name of Sub-Bidder	Price	Require bonds?

_____

_____

_____

_____

_____

_____

_____

_____

BY: _____
PLEASE TYPE OR PRINT NAME AND TITLE

SIGNED: _____ DATE: _____ / 2024

E. The undersigned agrees that, if selected as General Contractor, he or she will, within five days, (Saturdays, Sundays and legal holidays excluded) after presentation thereof by the Awarding Authority, execute a contract in accordance with the terms of the bid and furnish a Performance Bond and also a Labor and Materials (or Payment) Bond, each of a surety company qualified to do business under the laws of the Commonwealth of Massachusetts and satisfactory to the Awarding Authority and each Bond in the sum of 100 percent of the Contract price, the premiums for which are to be paid by the General Contractor and are included in the Contract price.

The undersigned hereby certifies that he is able to furnish labor that can work in harmony with all other elements of labor employed or to be employed on the work and that he will comply fully with all laws and regulations applicable to awards made subject to section forty-four A of M.G.L. Ch. 149.

The undersigned further certifies under penalties of perjury that this bid is in all respects bona fide, fair, and made without collusion or fraud with any other person. As used in this subsection, the word “person” shall mean any natural person, joint venture, partnership, corporation or other business or legal entity.

The undersigned further certifies under penalties of perjury that the said undersigned is not presently debarred from doing public construction work in the Commonwealth under the provisions of section 29-F of M.G.L. Chapter 29, or any other applicable debarment provisions of any other General Laws or any rule or regulations promulgated thereunder.

Completion Date: **1,537 Days from Date of Notice to Proceed**

Date: _____

(Please print or type Name of General Bidder)

by: _____

(Please print or type Name and Title of person signing Bid)

_____

(Business Address)

_____

(Please include City, State, Zip Code, Business Telephone & facsimile numbers)

SIGN HERE: _____

Please certify by writing your initials in the space provided below that all employees to be employed at the worksite will have successfully completed a course in construction safety and health approved by the United States Occupational Safety and Health Administration that is at least 10 hours in duration at the time the employee begins work and shall furnish documentation of successful completion of said course with the first certified payroll report for each employee.

Please initial: _____

- If a Corporation, signature and seal by duly authorized officer is required.
- If a partnership, so state and names and residential addresses of all partners are required.
- If an individual, so state and also indicate residential address if different than business address and also sign.

ATTACHMENT D – 01 20 00 MEASUREMENT AND PAYMENT

SECTION 01 20 00
MEASUREMENT AND PAYMENT[1]

PART 1 – GENERAL

1.01 SUMMARY

A. Section includes:

1. Items listed in this Section refer to and are the same pay items listed in the Bid Form and constitute all pay items for completing the Work.

2. Compensation for all services, items, materials, and equipment shall be included in prices stipulated for lump sum and unit price pay items listed in this Section and included in the Contract.

3. No direct or separate payment will be made for providing miscellaneous temporary or accessory works, bonds, insurance, or other requirements of the General Conditions, Supplementary Conditions, General Requirements, and other requirements of the Contract Documents.

4. Each lump sum and unit bid price shall include an amount considered by the Contractor to be adequate to cover Contractor's overhead and profit for each separately identified item.

B. Related Sections:

1. Payments to Contractor: Refer to General Conditions, Supplementary Conditions, and Agreement.

2. Changes to Contract Price: Refer to General Conditions, Supplementary Conditions, and Section 01 26 00 – Contract Modification Procedures.

3. Schedule of Values: Refer to General Conditions, Supplementary Conditions, and Section 01 29 73 – Schedule of Values.

1.02 ENGINEER'S ESTIMATE OF QUANTITIES

A. Engineer's and Owner's estimated quantities for unit price pay items, as listed in the Bid Form, are approximate only and are included solely for the purpose of comparison of Bids. Owner does not expressly or by implication agree that the nature of the materials encountered below the surface of the ground or the actual quantities of material encountered or required will correspond therewith and reserves the right to increase or decrease any quantity or to eliminate any quantity as Owner may deem necessary.

032919

[1] Addendum No.5

1.03 ADMINISTRATIVE REQUIREMENTS

A. Contractor shall include all additional Work items, services, goods, resources, and manpower necessary for installation of the Work to provide a completely functional system in accordance with the Contract Documents. Contractor shall include these costs associated with providing a completely functional system within the listed items on the Bid Form and as specified herein.

B. Bid Items:

1. Item 011100.1: General Construction

   a. Measurement and Payment: Lump sum for Item 1 will be full compensation for administration and completion of the Work, as shown on the Drawings and specified in the Contract Documents, except Work specifically included under other Items.

2. Item 011100.2: Mobilization

   a. Measurement: There will be no measurement for the mobilization to the Site as this Work will be on a lump sum basis.

   b. Payment: Payment of the lump sum Bid price will be paid in two payments in accordance with Section 01 29 73 – Schedule of Values. Each payment shall be in an amount equal to 50 percent of the total amount of this Item. In no case will the total of both payments exceed four percent of the Base Bid price.

3. Item 011100.3: Demobilization

   a. Measurement: There will be no measurement for the demobilization from the Site as this Work will be on a lump sum basis.

   b. Payment: Payment of the lump sum Bid price will be paid in the first application for payment after Substantial Completion has been reached, all equipment has been removed from the Site, and Site cleanup has been completed. In no case will the payment exceed one percent of the Base Bid price.

4. Item 014100.1: City of Westfield Building Permit Fees Allowance

   a. Description: This Item provides a sum of thirty-five thousand dollars ($35,000.00) to be used by the Contractor for the payment of City of Westfield building permit fees, including fees related to new construction, electrical, plumbing, ground signs, wall signs, temporary job trailers, suppression, alarm and ansul systems, demolition, and annual certificates of inspection.

b. Measurement: There will be no measurement for the payment of building permit fees to the City of Westfield as this work will be on an allowance basis.

c. Payment: Reimbursement of City of Westfield building permit fees will require copies of payments made to the City of Westfield by the Contractor. The Contractor shall be compensated for the Work under this allowance in accordance with the procedures specified in Article 11 of the General Conditions. There will be no additional compensation beyond the actual building permit fees paid to the City of Westfield. At the end of the Contract, any and all remaining funds shall be deducted from the Contract via a balancing change order.

5. Item 014100.2: City of Westfield Conservation Commission Fee Allowance

a. Description: This Item provides a sum of seven thousand five hundred dollars ($7,500.00) to be used by the Contractor for the payment of City of Westfield Conservation Commission fee.

b. Measurement: There will be no measurement for the payment of Conservation Commission fee to the City of Westfield as this work will be on an allowance basis.

c. Payment: Reimbursement of City of Westfield Conservation Commission fee will require copies of payments made to the City of Westfield by the Contractor. The Contractor shall be compensated for the Work under this allowance in accordance with the procedures specified in Article 11 of the General Conditions. There will be no additional compensation beyond the actual Conservation Commission fee paid to the City of Westfield. At the end of the Contract, any and all remaining funds shall be deducted from the Contract via a balancing change order.

6. Item 310001.1: Rock and Boulder Excavation

a. Description: Work under this Item shall consist of the break up, removal, handling, loading/live loading, stockpiling, and disposal of rock and boulders as defined in Section 31 00 01 – Earthwork. This Item is for rock and boulder excavation associated with Items 400519.1, 400524.1, 400524.2, 400524.3, and 400524.4 only. All other rock and boulder excavation shall be included in the lump sum Item 1.

b. Measurement: This Work will be measured for payment as the actual volume of material excavated. Payment limits shall be in accordance with Contract Documents and as agreed to with the Engineer and Owner prior to excavation and payment.

c. Payment: This Work will be paid for at the Contract unit price per cubic yard of rock and boulders to be excavated, which shall include all materials,

equipment, tools, and labor necessary to handle, load, and transport the rock and boulders to a stockpile location, and dispose of all rock and boulders offsite, and all equipment materials, tools, and labor incidental to this Work.

d. Quantity is estimated and may vary based on site conditions.

7. Item 310001.2: Additional Excavation and Select Fill Replacement

a. Description: Work under this Item shall consist of additional excavation and select fill replacement when ordered by the Engineer due to unsuitable subgrade materials as described in Section 31 00 01 – Earthwork.

b. Measurement: This Work will be measured for payment as the actual volume of unsuitable subgrade material that has been excavated, removed, and replaced with select fill as ordered by the Engineer. Payment limits are to be discussed and agreed to with the Engineer and Owner prior to excavation and payment.

c. Payment: Payment shall be per cubic yard, which includes excavation and disposal of unsuitable material, furnishing and delivery of select fill from offsite sources, placement of select fill, and compaction of select fill.

d. Quantity is estimated and may vary based on site conditions.

8. Masonry Work Filed Sub-Bid

a. Description: Work under this Item shall be full compensation for all mobilization, demobilization, materials, tools, and supervision necessary to complete all Work of the Masonry Work Filed Sub-Bid.

b. Measurement: There will be no measurement for this Item as this Work will be on a lump sum basis.

c. Payment: Payment of the lump sum Bid price will be based on the physical progress of the Work in accordance with the approved Schedule of Values.

9. Miscellaneous and Ornamental Iron Filed Sub-Bid

a. Description: Work under this Item shall be full compensation for all mobilization, demobilization, materials, tools, and supervision necessary to complete all Work of the Miscellaneous and Ornamental Iron Filed Sub-Bid.

b. Measurement: There will be no measurement for this Item as this Work will be on a lump sum basis.

c. Payment: Payment of the lump sum Bid price will be based on the physical progress of the Work in accordance with the approved Schedule of Values.

10. Waterproofing, Damp-proofing, and Caulking Filed Sub-Bid

a. Description: Work under this Item shall be full compensation for all mobilization, demobilization, materials, tools, and supervision necessary to complete all Work of the Waterproofing, Damp-proofing, and Caulking Filed Sub-Bid.

b. Measurement: There will be no measurement for this Item as this Work will be on a lump sum basis.

c. Payment: Payment of the lump sum Bid price will be based on the physical progress of the Work in accordance with the approved Schedule of Values.

11. Roofing and Flashing Filed Sub-Bid

a. Description: Work under this Item shall be full compensation for all mobilization, demobilization, materials, tools, and supervision necessary to complete all Work of the Roofing and Flashing Filed Sub-Bid.

b. Measurement: There will be no measurement for this Item as this Work will be on a lump sum basis.

c. Payment: Payment of the lump sum Bid price will be based on the physical progress of the Work in accordance with the approved Schedule of Values.

12. Metal Windows Filed Sub-Bid

a. Description: Work under this Item shall be full compensation for all mobilization, demobilization, materials, tools, and supervision necessary to complete all Work of the Metal Windows Filed Sub-Bid.

b. Measurement: There will be no measurement for this Item as this Work will be on a lump sum basis.

c. Payment: Payment of the lump sum Bid price will be based on the physical progress of the Work in accordance with the approved Schedule of Values.

13. Lathing and Plastering Filed Sub-Bid

a. Description: Work under this Item shall be full compensation for all mobilization, demobilization, materials, tools, and supervision necessary to complete all Work of the Lathing and Plastering Filed Sub-Bid.

b. Measurement: There will be no measurement for this Item as this Work will be on a lump sum basis.

c. Payment: Payment of the lump sum Bid price will be based on the physical progress of the Work in accordance with the approved Schedule of Values.

14. Resilient Floors Filed Sub-Bid

a. Description: Work under this Item shall be full compensation for all mobilization, demobilization, materials, tools, and supervision necessary to complete all Work of the Resilient Floors Filed Sub-Bid.

b. Measurement: There will be no measurement for this Item as this Work will be on a lump sum basis.

c. Payment: Payment of the lump sum Bid price will be based on the physical progress of the Work in accordance with the approved Schedule of Values.

15. Tile Filed Sub-Bid

a. Description: Work under this Item shall be full compensation for all mobilization, demobilization, materials, tools, and supervision necessary to complete all Work of the Tile Filed Sub-Bid.

b. Measurement: There will be no measurement for this Item as this Work will be on a lump sum basis.

c. Payment: Payment of the lump sum Bid price will be based on the physical progress of the Work in accordance with the approved Schedule of Values.

16. Acoustical Tile Filed Sub-Bid

a. Description: Work under this Item shall be full compensation for all mobilization, demobilization, materials, tools, and supervision necessary to complete all Work of the Acoustical Tile Filed Sub-Bid.

b. Measurement: There will be no measurement for this Item as this Work will be on a lump sum basis.

c. Payment: Payment of the lump sum Bid price will be based on the physical progress of the Work in accordance with the approved Schedule of Values.

17. Painting Filed Sub-Bid

a. Description: Work under this Item shall be full compensation for all mobilization, demobilization, materials, tools, and supervision necessary to complete all Work of the Painting Filed Sub-Bid.

b. Measurement: There will be no measurement for this Item as this Work will be on a lump sum basis.

c. Payment: Payment of the lump sum Bid price will be based on the physical progress of the Work in accordance with the approved Schedule of Values.

18. Elevators Filed Sub-Bid

a. Description: Work under this Item shall be full compensation for all mobilization, demobilization, materials, tools, and supervision necessary to complete all Work of the Elevators Filed Sub-Bid.

b. Measurement: There will be no measurement for this Item as this Work will be on a lump sum basis.

c. Payment: Payment of the lump sum Bid price will be based on the physical progress of the Work in accordance with the approved Schedule of Values.

19. Fire Protection Sprinkler Systems Filed Sub-Bid

a. Description: Work under this Item shall be full compensation for all mobilization, demobilization, materials, tools, and supervision necessary to complete all Work of the Fire Protection Sprinkler Systems Filed Sub-Bid.

b. Measurement: There will be no measurement for this Item as this Work will be on a lump sum basis.

c. Payment: Payment of the lump sum Bid price will be based on the physical progress of the Work in accordance with the approved Schedule of Values.

20. Plumbing Filed Sub-Bid

a. Description: Work under this Item shall be full compensation for all mobilization, demobilization, materials, tools, and supervision necessary to complete all Work of the Plumbing Filed Sub-Bid.

b. Measurement: There will be no measurement for this Item as this Work will be on a lump sum basis.

c. Payment: Payment of the lump sum Bid price will be based on the physical progress of the Work in accordance with the approved Schedule of Values.

21. Heating, Ventilation & Air-Conditioning Filed Sub-Bid

a. Description: Work under this Item shall be full compensation for all mobilization, demobilization, materials, tools, and supervision necessary to complete all Work of the Heating, Ventilation & Air-Conditioning Filed Sub-Bid.

b. Measurement: There will be no measurement for this Item as this Work will be on a lump sum basis.

c. Payment: Payment of the lump sum Bid price will be based on the physical progress of the Work in accordance with the approved Schedule of Values.

22. Electrical Filed Sub-Bid

a. Description: Work under this Item shall be full compensation for all mobilization, demobilization, materials, tools, and supervision necessary to complete all Work of the Electrical Filed Sub-Bid.

b. Measurement: There will be no measurement for this Item as this Work will be on a lump sum basis.

c. Payment: Payment of the lump sum Bid price will be based on the physical progress of the Work in accordance with the approved Schedule of Values.

23. Alternate No. 1: Provide Lined Carbon-Steel Piping in lieu of Stainless-Steel Piping for Exposed Applications

a. Lump sum payment for Bid Alternate Item 1 shall be full compensation for providing lined carbon-steel piping in accordance with Section 40 05 24.23 – Steel Pipe for Water Service in lieu of stainless-steel piping in accordance with Section 40 05 24.24 – Stainless-Steel Pipe for select exposed applications in accordance with Section 40 06 20 – Process Pipe, Valve, and Gate Schedule.

b. Exposed applications subject to Bid Alternate Item 1 include the following:

1) Backwash Feed (BWF).

2) Backwash Supply (BWS).

3) Clarified Water (CLW).

4) Filtered Water (FILW).

5) Filter-to-Waste (FTW).

6) Raw Water (RW).

7) Waste Washwater (WWW).

8) Waste Washwater Recycle (WWWR).

c. Exposed applications not subject to Bid Alternate Item 1 include the following:

1) DAF Recycle (DAFR).

2) Clarified Water Line (CLW) within the DAF tanks.

3) Overflow Pipe (OF).

d. The Contractor shall obtain written permission from the Owner prior to performing this Work.

e. The cost of this item shall reflect the cost of completing the Work within the Contract Times. Contract Time extensions shall not be allowed due to the performance of this Work.

24. Alternate No. 2: Painting Filed Sub-Bid

a. Description: Work under this Item shall be full compensation for all mobilization, demobilization, materials, tools, and supervision necessary to complete all Work of the Painting Filed Sub-Bid. Work under this alternative includes the additional work required due to the addition of Alternative 1.[2]

b. Measurement: There will be no measurement for this Item as this Work will be on a lump sum basis.

c. Payment: Payment of the lump sum Bid price will be based on the physical progress of the Work in accordance with the approved Schedule of Values.

PART 2 – PRODUCTS (NOT USED)

PART 3 – EXECUTION (NOT USED)

END OF SECTION

[2] Addendum No.4

NO TEXT ON THIS PAGE

ATTACHMENT E – 05 14 00 STRUCTURAL ALUMINUM (FSB)

DIVISION 05

MISCELLANEOUS AND ORNAMENTAL IRON

(Filed Sub Bid Required)

SECTION 05 14 00

STRUCTURAL ALUMINUM[1]

PART 1 – GENERAL

1.1 FILED SUB-BID REQUIREMENTS

A. This Section is part of the filed sub-bid for Division 05 – Miscellaneous and Ornamental Iron. See Section 05 00 00.

1.2 THE REQUIREMENT

A. Furnish all equipment, labor, materials, and services required to provide all structural aluminum work in accordance with the Contract Documents. The term "structural aluminum" shall include items as defined in the Aluminum Association "Specifications for Aluminum Structures".

1.3 RELATED WORK SPECIFIED ELSEWHERE

A. Section 05 10 00 – Metal Materials

B. Section 05 05 23 – Metal Fastening

C. Section 09 90 00 – Painting

1.4 REFERENCE SPECIFICATIONS, CODES, AND STANDARDS

A. Without limiting the generality of other requirements of the Specifications, all work specified herein shall conform to the applicable requirements of the following documents. All referenced specifications, codes, and standards refer to the most current issue available at the time of the Bid.

1. Massachusetts State Building Code

2. Aluminum Association "Specifications for Aluminum Structures"

3. AWS D1.2 – "Structural Welding Code"

102220

1 Addendum No. 5

1.5 SUBMITTALS

A. Submit the following in accordance with Section 01 33 00 – Submittal Procedures.

1. Certified Mill Test Reports

2. Affidavit of Compliance with grade specified

3. Shop Drawings which include the following:

a. Layout drawings indicating all structural shapes, sizes, and dimensions.

b. Beam and column schedules.

c. Detailed drawings indicating jointing, anchoring and connection details.

1.6 QUALITY ASSURANCE

A. Shop inspection may be required by the Owner at his own expense. The MISCELLANEOUS AND ORNAMENTAL IRON SUBCONTRACTOR shall give ample notice to the Engineer prior to the beginning of any fabrication work so that inspection may be provided. The MISCELLANEOUS AND ORNAMENTAL IRON SUBCONTRACTOR shall furnish all facilities for the inspection of materials and workmanship in the shop, and the inspectors shall be allowed free access to the necessary parts of the work. Inspectors shall have the authority to reject any materials or work which do not meet the requirements of these Specifications. Inspection at the shop is intended as a means of facilitating the work and avoiding errors, but is expressly understood that it will in no way relieve the MISCELLANEOUS AND ORNAMENTAL IRON SUBCONTRACTOR from his responsibility for furnishing proper materials or workmanship under this Specification.

PART 2 – PRODUCTS

2.1 MATERIALS

A. Structural aluminum shall comply with Section 05 10 00 - Metal Materials.

B. Fasteners for structural aluminum shall be in accordance with Section 05 05 23 - Metal Fastening.

C. Electrodes for welding shall be in accordance with Section 05 05 23 - Metal Fastening.

PART 3 – EXECUTION

3.1 MEASUREMENT

A. The Contractor shall verify all dimensions and shall make any field measurements necessary and coordinate with the MISCELLANEOUS AND ORNAMENTAL IRON SUBCONTRACTOR. . The Contractor shall review the Drawings and any discrepancies shall be coordinated with the MISCELLANEOUS AND ORNAMENTAL IRON SUBCONTRACTOR and reported to the Engineer for clarification prior to starting fabrication.

3.2 FABRICATION

A. Fabrication shall be in accordance with the Aluminum Association "Specifications for Aluminum Structures". Fabrication shall begin only after Shop Drawing approval.

B. Except where otherwise noted on the Drawings or in this Specification, all shop connections shall be welded.

C. All holes in structural aluminum members required for anchors, anchor rods, bolts, or other members or for attachment of other work shall be provided by the fabricator and detailed on the Shop Drawings.

D. All materials shall be properly worked and match-marked for field assembly.

3.3 DELIVERY, STORAGE AND HANDLING

A. Structural members shall be loaded in such a manner that they may be transported and unloaded without being over-stressed, deformed or otherwise damaged.

B. Structural aluminum members and packaged materials shall be protected from corrosion and deterioration. Material shall be stored in a dry area and shall not be placed in direct contact with the ground. Materials shall not be placed on the structure in a manner that might cause distortion or damage to the members or the supporting structures. The MISCELLANEOUS AND ORNAMENTAL IRON SUBCONTRACTOR shall repair or replace damaged materials or structures as directed.

3.4 ERECTION

A. All temporary bracing, guys and bolts as may be necessary to ensure the safety of the structure until the permanent connections have been made shall be provided by the MISCELLANEOUS AND ORNAMENTAL IRON SUBCONTRACTOR.

B. Structural members shall be set accurately to the lines and elevations indicated. The various members shall be aligned and adjusted to form a part of a complete frame or structure before being permanently fastened.

C. No cutting of structural aluminum members in the field will be allowed except by the written approval of the Engineer.

D. Bearing surfaces and other surfaces which will be in permanent contact shall be cleaned before assembly.

E. Field welding shall not be permitted unless specifically indicated in the Drawings or approved in writing by the Engineer. All field welding shall comply with Section 05 05 23 – Metal Fastening.

F. All bolted connections shall comply with Section 05 05 23 – Metal Fastening.

G. All field connections shall be accurately fitted up before being bolted. Drifting shall be only such as will bring the parts into position and shall not be sufficient to enlarge the holes or to distort the metal. All unfair holes shall be drilled or reamed.

H. Misfits at Bolted Connections

1. Where misfits in erection bolting are encountered, the Engineer shall be immediately notified. The MISCELLANEOUS AND ORNAMENTAL IRON SUBCONTRACTOR shall submit a method to remedy the misfit for review by the Engineer. The Engineer will determine whether the remedy is acceptable or if the member must be refabricated.

2. Incorrectly sized or misaligned holes in members shall not be enlarged by burning, or by the use of drift pins. The MISCELLANEOUS AND ORNAMENTAL IRON SUBCONTRACTOR shall notify the Engineer immediately and shall submit a proposed method of remedy for review by the Engineer.

3. Where misalignment between anchor bolts and bolt holes in aluminum members are encountered, the Engineer shall be immediately notified. The MISCELLANEOUS AND ORNAMENTAL IRON SUBCONTRACTOR shall submit a method to remedy the misalignment for review by the Engineer.

I. Grouting of Base Plates and Bearing Plates

1. The bottom surface of the plates shall be cleaned of all foreign materials, and concrete or masonry bearing surface shall be cleaned of all foreign materials and roughened to improve bonding.

2. Accurately set all base and bearing plates to designated levels with steel wedges or leveling plates.

3. Baseplates shall be grouted with non-shrink grout by Contractor to assure full uniform bearing. Grouting shall be done prior to placing loads on the structure. Non-shrink grout shall conform to Section 03 60 00 - Grout.

4. Anchor bolts shall be tightened after the supported members have been positioned and plumbed and the non-shrink grout has attained its specified strength.

J. Where finishing is required, assembly shall be completed including bolting and welding of units before the start of finishing operations.

3.5 PAINTING

A. Painting shall be performed according to Section 09 90 00 - Painting.

B. Aluminum surfaces in contact with concrete or dissimilar metals shall be thoroughly protected with two coats of epoxy paint with a minimum total thickness of 16 mils or other approved isolating material in accordance with the requirements of Section 09 90 00 - Painting.

END OF SECTION

NO TEXT ON THIS PAGE

ATTACHMENT F – 05 40 00 COLD-FORMED METAL FRAMING

SECTION 05 40 00
COLD-FORMED METAL FRAMING[1]

PART 1 – GENERAL

1.01 THE REQUIREMENTS

A. Furnish and install cold-formed metal framing in accordance with the Contract Documents. Exterior walls, load-bearing walls, and walls taller than 12'-0" shall be provided under this specification section.

1.02 RELATED WORK SPECIFIED ELSEWHERE

A. Section 05 05 23 – Metal Fastening

B. Section 05 50 00 – Metal Fabrications

C. Section 07 90 00 – Joint Fillers, Sealants and Caulking

D. Section 09 29 00 – Gypsum Drywall System

1.03 REFERENCE SPECIFICATIONS, CODES, AND STANDARDS

A. Without limiting the generality of other requirements of these specifications, all work hereunder shall conform to the applicable requirements of the reference portions of the following documents, to the extent that the requirements therein are not in conflict with the provisions of this Section.

1. Commercial Standards

   a. ASTM A653 – Standard Specification for Steel Sheet, Zinc-Coated (Galvanized) or Zinc Iron Alloy-Coated (Galvannealed) by the Hot-Dip Process

   b. ASTM A153 – Standard Specification for Zinc-Coating (Hot-Dip) on Iron and Steel Hardware

   c. ASTM C1007 – Standard Specification for Installation of Load Bearing (Transverse and Axial) Steel Studs and Related Accessories.

   d. ASTM C1513 – Standard Specification for Steel Tapping Screws for Cold-Formed Steel Framing Connections

052416

[1] Addendum No. 5

e. ASTM C955 – Load-Bearing (Transverse and Axial) Steel Studs, Runners (Track), and Bracing or Bridging for Screw Application of Gypsum Board and Metal Poster bases

f. A.I.S.I (American Iron and Steel Institute) – Specification for the Design of Cold-Formed Steel Structural Members

1.04 SUBMITTALS

A. Submit shop drawings in accordance with Section 01 33 00 – Submittal Procedures.

B. Submit manufacturer's data sheets and erection instruction for each item specified.

C. Submit shop drawings for load bearing framing members and exterior wall framing members showing size and gauge designations, number, type, location, and spacing. Indicate supplemental strapping, bracing, splices, bridging, accessories, and details required for proper installation. Shop drawings shall be sealed by an independent Professional Engineer registered in the State of Massachusetts in which the project is located.

1.05 QUALITY ASSURANCE

A. Calculate structural properties of studs, girts and joists in accordance with AISI "Specification for Design of Cold-Formed Steel Structural Members".[2]

B. Calculate and provide support members for related work of Section 05 50 00 – Metal Fabrications for miscellaneous steel shapes, masonry shelf angles, and connections used with cold-formed metal framing.

C. Welding shall be accomplished by qualified welders and comply with American Welding Society (AWS) D1.3, "Structural Welding Code – Sheet Steel".

D. Where framing units are components of assemblies indicated for a fire-resistance rating provide units which have been approved by governing authorities having jurisdiction.

1.06 DELIVERY, STORAGE AND HANDLING

A. Protect metal framing units from rusting and damage. Deliver to protect site in manufacturer's unopened containers or bundles, fully identified with name, brand, type, and grade. Store off ground in a dry ventilated space or protect with breathable waterproof tarpaulins.

---

[2] Addendum No.2

PART 2 – PRODUCTS

2.01 MANUFACTURERS

A. Subject to compliance with requirements of these Specifications, provide a metal framing system consisting of steel studs, shaft wall framing, furring, runners (tracks), blocking, lintels, clips angles, shoes, reinforcements, fasteners, masonry veneer support bracing, and accessories required to provide a complete framing system and as manufactured by Dale/INCOR, Gold Bond Building Products, Unimast Corporation, ClarkDietrich, Marino\Ware, or equal.

2.02 MATERIALS

A. For 16-gage and heavier units, fabricate metal framing components of structural quality steel sheet with a minimum yield point of 40,000 psi; ASTM 653.

B. For 18-gage and lighter units, fabricate metal framing of commercial quality steel sheet with a minimum yield point of 33,000 psi; ASTM A 653.

2.03 PRODUCTS

A. Provide manufacturer's standard steel runners (tracks), blocking, lintels, clip angles, shoes, reinforcements, fasteners, and accessories as recommended by manufacturer for applications indicated, and as needed to provide a complete metal framing system as required by the Shop Drawings and Contract Documents.

B. "C"-Shape studs shall be manufacturer's standard load bearing steel studs of size, shape, and gage indicated, with 1. 25 inch minimum flange and flange return lip.

C. Punched channel studs shall be manufacturer's standard, factory punched, load bearing steel studs of size, shape, and gage indicated, with 1.375 inch flange.

D. Joists shall be manufacturer's standard C-shape sections of size, shape and gage required for the spans and loads.

E. Furring members with spans less than 4 feet shall be hat shaped, 0.0179 inch minimum thickness base metal, and comply with ASTM C 645.

F. Furring members with spans greater than 4 feet shall be C-shape, 0.0179 inch minimum thickness base metal, and comply with ASTM C 645.

G. Girt members shall be Z-shape, 16-gage minimum thickness, designed for rainscreen framing and comply with AISI S100-16 w/S2-20 North American Specification for the Design of Cold-Formed Steel Structural Members.[2]

2.04 FINISHES

A. Provide galvanized finish to metal framing components minimum G 60 coating.

PART 3 – EXECUTION

3.01 GENERAL

A. Verification: The Contractor shall examine all Contract Drawings covering the work of this Section and refer to all other Contract Drawings which may affect this work or require coordination by this trade. Execution of work of this trade constitutes acceptance of adjoining work and other conditions as being satisfactory in every respect. Later claims of defects in such cases will not constitute relief in any way from the requirement of these Specifications.

B. Cooperation: The Contractor shall cooperate with all trades supplying materials or performing work in connection with the work under this Section to those other trades whose work is affected by the work of this Section. The Contractor shall provide to the job any and all items required to be built into the other work in ample time to avoid delaying the normal progress of such other work.

3.02 FABRICATION

A. Framing components may be prefabricated into panels prior to erection. Fabricate panels plumb, square, true to line and braced against racking with joints welded. Perform lifting of prefabricated panels in a manner to prevent damage or distortion. Fabricate panel to a maximum allowable tolerance variation from plumb, level, and true to line of 1/8" in 10'-0".

B. Attach similar components by welding. Attach dissimilar components by welding, bolting or screw fasteners, as standard with manufacturer. Wire tying of framing is not permitted. Repair of galvanized surfaces damaged by welding with zinc rich paint.

3.03 INSTALLATION

A. Install metal framing system in accordance with manufacturer's printed instructions and recommendations.

B. Install continuous tracks sized to match studs. Align tracks accurately to layout base and tops of studs. Secure tracks as recommended by stud manufacturer for type of construction involved, except do not exceed 16". Provide fasteners at corners and end of track.

C. Set studs plumb where stud system abuts structural columns or walls, included masonry walls, anchor ends of stiffeners to supporting structure.

D. Install supplementary framing, blocking, and bracing in metal framing system wherever walls or partitions are indicated to support fixtures, equipment, services, case work, heavy trim and furnishings, and similar work requiring attachment to wall or partition. Where type of supplementary support is not otherwise indicated, comply with stud manufacturer's recommendations and industry standards, considering weight or loading resulting from each item supported.

E. Secure studs to top and bottom runner tracks by either welding or screw fastening at both inside and outside flanges.

F. Frame openings larger than 2'-0" wide with double stud at each jamb, unless more are indicated, or indicated by manufacturer's instructions.

G. Provide load bearing headers at each opening.

H. Install horizontal stiffeners in stud system, spaced vertically at not more than 4'-6" on center. Weld at each intersection.

I. Install joist level and plumb, complete with bracing and reinforcing recommended by manufacturer.

END OF SECTION

ATTACHMENT G – 05 52 00 GUARDS AND RAILINGS

DIVISON 05

MISCELLANEOUS AND ORNAMENTAL IRON

(FILED SUB BID REQUIRED)

SECTION 05 52 00
GUARDS AND RAILINGS[1]

PART 1 – GENERAL

1.01 FILED SUB-BID REQUIREMENTS

A. This Section is part of the filed sub-bid for Division 05 – Miscellaneous and Ornamental Iron. See Section 05 00 00.

1.02 THE REQUIREMENT

A. Furnish all materials, labor, and equipment required to provide all metal guards and railings in accordance with the Contract Documents.

1.03 RELATED WORK SPECIFIED ELSEWHERE

A. Section 05 10 00 – Metal Materials

B. Section 05 05 23 – Metal Fastening

1.04 REFERENCE SPECIFICATIONS, CODES, AND STANDARDS

A. Without limiting the generality of the other requirements of the specifications, all work herein shall conform to the applicable requirements of the following documents. All referenced specifications, codes, and standards refer to the most current issue available at the time of Bid.

1. Massachusetts State Building Code

2. Aluminum Association Specifications for Aluminum Structures

3. Occupational Safety and Health Administration (OSHA) Regulations

1.05 SUBMITTALS

A. Submit the following in accordance with Section 01 33 00 – Submittal Procedures.

022223

1 Addendum No. 5

1. Complete fabrication and erection drawings of all metal work specified herein, sealed by a Professional Engineer currently licensed in the State or Commonwealth in which the Project is located.

2. Other submittals as required in accordance with Section 05 10 00 – Metal Materials and Section 05 05 23 – Metal Fastening.

3. Structural calculations on guards, railing, and handrail system sealed by a Professional Engineer currently licensed in the State or Commonwealth in which the project is located.

PART 2 – PRODUCTS

2.01 MANUFACTUERS

A. Subject to compliance with requirements of these Specifications, provide Type III Guards and Railings as fabricated by the following:

1. (Basis of Design: Circum Round) HDI Railing Systems, 3905 Continental Drive, Columbia PA 17512;

2. GRECO, a CSW Industrials Company, 9410 Eden Avenue, Hudson, FL 34667;

3. VIVA Railings, LLC, 151 E Vista Ridge Mall Dr, Lewisville, TX 75067;

4. Or approved equal

2.02 METAL MATERIALS

A. Metal materials used for guards and railings shall conform to Section 05 10 00 – Metal Materials, unless noted otherwise.

2.03 METAL FASTENING

A. All welds and fasteners used in guards and railings shall conform to Section 05 05 23 – Metal Fastening, unless noted otherwise.

2.04 GUARDS AND RAILINGS

A. General – Design of guard and handrail systems is the exclusive responsibility of the MISCELLANEOUS AND ORNAMENTAL IRON SUBCONTRACTOR. Guard systems shall consist of all railings, posts, toeboards, baseplates, anchors, and accessories required for a complete and rigid installation.

1. Type I and II guard systems shall be fabricated from extruded aluminum alloy 6061-T6 or 6105-T5, with Aluminum Association M12C22A41 finish, unless otherwise noted.

2. 1. Type III components shall be fabricated from Stainless steel grade type AISI 304L surface to be 240 grain/grit finish:

    a. Posts 1-1/2” (38mm) outside diameter by 5/64” (2 mm) wall thickness.

    b. End caps at top of posts. Hardware for handrail attachment to match finish of posts.

3. Metal railings shall be fabricated from 1-1/2 inch Schedule 40 minimum pipe. Metal railing support posts shall be fabricated from 1-1/2 inch Schedule 80 minimum pipe except as noted otherwise.

4. The top of the upper guard rail shall be 42 inches above the walking surface for level guards. For stair guards, the top of the upper guard rail shall be 42 inches above the leading edge of the tread nosing. The top of stair handrail shall be 34 inches above the leading edge of the tread nosing.

5. Posts

    a. Maximum horizontal spacing between posts for level rail shall be six feet.

    b. Maximum horizontal spacing between posts for stair rail shall be five feet.

6. All rail joints shall be finished flush and shall occur only at supports. Posts shall not interrupt the continuation of the top rail at any point along the railing, including corners and end terminations. The top surface of the top railing shall be smooth and shall not be interrupted by projecting fittings.

7. Toeboards

    a. Toeboards shall project 4-inches above the walking surface and shall not infringe on the minimum required walkway width.

    b. Aluminum toeboards shall be extruded from aluminum alloy 6063-T6 unless otherwise noted.

    c. Toeboards shall have a minimum thickness of 1/8" at any point. Geometry of toeboard shall closely resemble geometry shown on Drawings.

8. Expansion joint splices shall be provided at 30 foot maximum spacing and at all expansion joints in the structure supporting the guards.

9. The guard system shall be designed to resist the design loads specified by both OSHA and the Massachusetts State Building Code.

10. Provide handrail extensions at top and bottom of stairs and ramps in accordance with the Massachusetts State Building Code.

B. For Type I guards, the MISCELLANEOUS AND ORNAMENTAL IRON SUBCONTRACTOR shall have the option of providing a guard system of either an all welded type construction or a component type construction. For Type II and III guards, the MISCELLANEOUS AND ORNAMENTAL IRON SUBCONTRACTOR shall provide a guard system of all welded type construction.

1. With both the all welded or component type construction, the baseplates and toeboards shall be furnished as shown on the Drawings.

2. Component Type System

   a. All fittings and brackets shall be designed for stainless steel concealed set screws with internal tyne type connectors.

   b. Exposed fittings shall be cast or extruded aluminum, or stainless steel to match guard material, except where corrosion-resistant steel is employed as a standard fabricator's item for use.

3. Component type guards shall be as manufactured by Thompson Fabricating Company, Inc., Superior Aluminum Products, Inc. or Hollaender Manufacturing Company, Inc.

4. Welded guards may be field assembled using component type fittings as described herein.

C. Guards shall be either Type I, Type II, or Type III guards as shown on the Drawings. If no type is indicated on Drawings, guards shall be Type I.

1. Type I guards shall be a two-rail system. The intermediate rail shall be located as required to prevent passage of a 21-inch diameter sphere at any point.

2. Type II guards shall be a three-rail system with vertical posts spanning between the two intermediate rails.

   a. The centerline of the lower intermediate rail shall be 7 inches above the walking surface.

   b. The upper intermediate members, whether additional rails or vertical posts, shall be located below the top rail at a spacing as required to prevent passage of a 4-inch diameter sphere between the two rails.

   c. Vertical posts spanning between the intermediate rails shall be 1/2" diameter schedule 40 pipe.

   d. Spacing of vertical posts shall be as required to prevent passage of a 4-inch diameter sphere at any point.

3. Type III guards shall be natural wood handrails and top rails to be connected to stainless steel true bar secured to posts using stainless steel T-connectors on top of posts: Mitered joints required by changes in direction require stainless steel true bar to be inserted into the underside of the wood.

   a. Wood types to be natural beech, birch or maple as selected by Architect.

   b. Wood to be continuous throughout. Returns to wall or floor that require stainless steel bends should have transitions that are smooth and without burrs.

   c. Stainless steel infill rods, max. 9 ea. with guardrail height 42“. Infill rails to be 3/8“ (9.5 mm) diameter solid stainless steel. Brushed finish #6 polished radially. Clamping knobs and fixtures to be stainless steel finished to match. Horizontal infill rails on approx. 4“(100 mm) centers, gaps between rods and adjacent posts to be equalized depending on required rail length and site conditions not to exceed 4“ (100 mm).

   d. Anchors and or fastener bolt shall be fabricated from stainless steel or other materials as determined by engineering requirements with capability to sustain, without failure, load imposed within a safety factor of 4, as determined by testing per ASTM E488 and in accordance with the requirements of Section 05 05 23 - Metal Fastening.

D. Where gates are required in guards as shown on the Drawings, they shall be self-closing and shall be provided by the same manufacturer as the guards. Gates shall swing away from the opening being protected by the guards.

2.05 FREE STANDING RAILING SYSTEM

A. Free standing railing system shall be installed in the Dewatering Building at EL 484.5-ft. The MISCELLANEOUS AND ORNAMENTAL IRON SUBCONTRACTOR shall furnish free standing railing system for the use around the floor opening when the equipment removal hatch is removed. See Drawings for equipment removal hatch. Free standing railing system shall be Safety Rail 2000 Guardrail System by BlueWater Mfg., Inc., SafetyRail2000 by Dakota Safety, or Keegard Safety Railing by Simplified Safety.[2]

B. Toe Board brackets shall be used when the parapet wall is less than 3-1/2” in height.

C. Performance Characteristics: Shall meet and exceed OSHA (Standards - 29 CFR) 1926.502 (b).

   1. Railing System shall be designed to withstand a minimum 200 pounds of test load in any direction.

---

2 Addendum No. 4

2. Railing System shall consist of a top rail and rail at mid height between top rail and walking surface.

3. Railing system shall extend to a height of at least 42" from the finished roof deck.

4. Railing system shall be free of sharp edges and snag points.

D. Railing and Base

1. Rail shall be 1 5/8” O.D. Hot Rolled Pickled Electric Weld Tubing

2. Each support post shall have a free standing base cast from Class 30 Gray Iron material.

3. Each base shall have four (4) receiver posts for accepting the rails.

4. The receiver posts shall have a positive locking system. A friction locking system will not be acceptable.

5. The receiver posts shall have a slot to enable the rails to be mounted in any direction.

E. Hardware

1. The securing pins shall be made from 1010 carbon steel. The pins shall be zinc plated and yellow chromate dipped. The pins shall consist of a collared pin and a lanyard that connects to a lynch pin.

2. For Gate Assemblies Only. Bolts and washers shall be 3/8" x 3 ½" and 3/8" x 3" grade 5, zinc plated.

3. Finish for Type I and Type II guards shall be as follows:

a. All aluminum work of this Section: Powder Fluoropolymer Aluminum Extrusion Coatings, AAMA 2605 Minimum 70% PVDF resin, by weight, in color coat

b. Dry Film Thickness, ASTM D 7091: 0.20-0.30 mil liquid primer coat or 1.5-3.0 powder primer plus 2.0-4.0 mil powder topcoat, 3.7 – 7.3 mil total minimum thickness.

c. Color as selected by Architect from all colors available. Coating Product manufacturers or approved equal for normal and severe environments:

1) (Basis of Design) PPG Duranar Powder Coatings;

2) Akzon Nobel Trinar;

3) Sherwin-Williams Fluropon;

PART 3 – EXECUTION

3.01 FABRICATION

A. All measurements and dimensions shall be based on field conditions and shall be verified by the Contractor and coordinated with the MISCELLANEOUS AND ORNAMENTAL IRON SUBCONTRACTOR prior to fabrication. Such verification shall include coordination with all adjoining work.

B. All fabricated work shall be shop fitted together as much as practical, and delivered to the field, complete and ready for erection.

C. All work shall be fabricated and installed in a manner that will provide for expansion and contraction, prevent shearing of bolts, screws, and other fastenings, ensure rigidity, and provide a close fit of sections.

D. Finished members shall conform to the lines, angles, and curves shown on the drawings and shall be free from distortions of any kind.

E. All shearings shall be neat and accurate, with parts exposed to view neatly finished. Flame cutting is allowed only when performed utilizing a machine.

F. Concrete anchors and bolts for attachment of guard baseplates to supporting members shall conform to Section 05 05 23 – Metal Fastening.

G. All fabricated items shall be shop painted in accordance with Section 09 90 00 – Painting.

3.02 INSTALLATION

A. Assembly and installation of guards and railings shall be performed in strict accordance with manufacturer's recommendations.

B. All guards and railings shall be erected square, plumb and true, accurately fitted, adequately anchored in place, and set at proper elevations and positions.

C. Erection tolerances:

1. Maximum variation from plumb shall be 1/4" (6mm).

2. Maximum offset from true alignment for every 50-foot of railing shall be 1/4" (6 mm), non-accumulative.

3.03 CLEANING AND PROTECTION

A. Remove manufacturer's protective coverings from exposed surfaces after installation.

B. Railings shall be cleaned, including infill panels, by MISCELLANEOUS AND ORNAMENTAL IRON SUBCONTRACTOR to the satisfaction of the owner.

C. Wipe with moistened cloth only. Do not use cleaning agents with abrasive or acid/alkaline content.

D. MISCELLANEOUS AND ORNAMENTAL IRON SUBCONTRACTOR to provide protective covering on handrails and guardrails if construction is not yet finished in the area where the railings are installed.

END OF SECTION

ATTACHMENT H – 07 10 00 BASIC WATERPROOFING DAMPROOFING AND CAULKING REQUIREMENTS

DIVISION 07

WATERPROOFING, DAMPROOFING, AND CAULKING

(Filed Sub Bid Required)

SECTION 07 10 00

BASIC WATERPROOFING, DAMPROOFING, AND CAULKING REQUIREMENTS[1]

PART 1 – GENERAL

1.01 DEFINITIONS

A. FSB: Filed Sub-Bid(der).

B. FSSB: Filed Sub-Sub-Bid(der).

1.02 FILED SUB-BID REQUIREMENTS

A. A FSB submitted for the work of Division 07 – Waterproofing, Damproofing, and Caulking shall include the work specified in the following Sections:

1. 07 13 54 - Thermoplastic Sheet Waterproofing

2. 07 26 16 – Below Grade Vapor Retarder[2]

3. 07 27 26 - Fluid-Applied Membrane Air Barriers[2]

B. FSB shall comply with the requirements of Massachusetts General Laws c. 149, §44F, shall be submitted on the form provided in Section 00 40 01 – Forms for Filed Sub-Bid, at the time specified in Section 00 11 00 – Advertisement for Bids, and shall be accompanied by a bid deposit complying with the requirements of Massachusetts General Laws cc. 149, §44B(2) and all other documents required by Section 00 20 00 – Instructions to Bidders.

C. The work of Division 07 – Waterproofing, Damproofing, and Caulking is indicated on Drawing Nos. G-002 through G-005 – Index of Drawings and is listed on the Drawing title block on individual Drawings. Drawings that are denoted in the title block as requiring a Filed Sub-Bid Contractor shall require a Filed Sub-Bid Contractor for the work shown in whole or in part of the Drawing.

---

1 Addendum No. 5
2 Addendum No.3

D. WATERPROOFING, DAMPROOFING, AND CAULKING SUBCONTRACTOR shall furnish and install firestopping at temporary and permanent penetrations due to its work in accordance with Section 07 84 00 – Firestopping.

1. WATERPROOFING, DAMPROOFING, AND CAULKING SUBCONTRACTOR shall furnish and install the firestopping material selected by the CONTRACTOR.

E. WATERPROOFING, DAMPROOFING, AND CAULKING SUBCONTRACTOR shall furnish and install expansion joint and caulking materials required to make foundations, walls and other surfaces of the buildings impervious to water in accordance with Section 07 90 00 - Joint Fillers, Sealants, and Caulking and Section 07 95 00 – Expansion Joint Systems.

1. WATERPROOFING, DAMPROOFING, AND CAULKING SUBCONTRACTOR shall furnish and install the expansion joint and caulking materials selected by the CONTRACTOR.

F. Staging and Scaffolding:

1. Hoisting Equipment: The WATERPROOFING, DAMPROOFING, AND CAULKING SUBCONTRACTOR shall furnish, install and maintain all mechanical hoisting equipment, operating personnel and rigging required for the execution of the Work as specified in this Section.

2. Staging, Planking and Scaffolding: The WATERPROOFING, DAMPROOFING, AND CAULKING SUBCONTRACTOR shall furnish, install and maintain all staging, planking and scaffolding up to eight feet in height required for the Work in this Section.

1.03 RELATED WORK

A. Division 01 – General Requirements

B. Section 01 33 00 – Submittal Procedures

C. Section 01 74 00 – Cleaning and Waste Management

D. Section 01 91 00 – Building Systems Commissioning

E. Section 03 30 00 – Cast-In-Place Concrete

F. Section 07 13 54 - Thermoplastic Sheet Waterproofing

G. Section 07 26 16 - Fluid-Applied Membrane Air Barriers

H. Section 07 90 00 – Joint Fillers, Sealants, and Caulking

I. Section 07 95 00 – Expansion Joint System

PART 2 – PRODUCTS

A. (NOT USED)

PART 3 – EXECUTION

A. (NOT USED)

END OF SECTION

ATTACHMENT I – 07 13 54 THERMOPLASTIC SHEET WATERPROOFING

DIVISION 07

WATERPROOFING, DAMPROOFING, AND CAULKING

(Filed Sub Bid Required)

SECTION 07 13 54

THERMOPLASTIC SHEET WATERPROOFING[1]

1.01 GENERAL

1.02 FILED SUB-BID REQUIREMENTS

A. This Section is part of the filed sub-bid for Division 07 Waterproofing, Damproofing and Caulking. See Division 7 Thermal and Moisture Protection.

1.03 SECTION INCLUDES

A. This section includes pre-applied thermoplastic sheet waterproofing system with prefabricated drainage composite and protection board. Waterproofing that forms an integral bond to poured concrete for the following applications:

1. Vertical Applications: Membrane applied against soil retention system prior to placement of concrete foundation walls;

2. Horizontal Applications: Membrane applied on prepared sub base prior to placement of concrete slabs.

1.04 RELATED SPECIFICATIONS

A. Section 03 30 00 – Cast-in-Place Concrete

B. Section 07 26 13 – Above Grade Vapor Retarders

1.05 REFERENCES

A. MASS-BC – State of Massachusetts Building Code

B. ASTM C836 – Standard Specification for High Solids, Cold Liquid-Applied Elastomeric Waterproofing Membrane for Use with Separate Wearing Course

C. ASTM D412 – Standard Test Methods for Rubber Properties in Tension

D. ASTM D570 – Standard Test Methods for Water Absorption of Plastics

---

[1] Addendum No. 5

E. ASTM D882 – Standard Test Methods for Tensile Properties of Thin Plastic Sheeting

F. ASTM D903 – Standard Test Method for Peel or Stripping Strength of Adhesive Bonds

G. ASTM D1434 – Standard Test Method for Determining Gas Permeability Characteristics of Plastic Film and Sheeting

H. ASTM D1876 – Standard Test Method for Peel Release of Adhesives (T-Peel)

I. ASTM D1970 – Standard Specification for Self-Adhering Polymer Modified Bituminous Sheet Materials Used as Steep Roofing Underlayment for Ice Dam Protection

J. ASTM D3767 – Standard Practice for Rubber - Measurements of Dimensions

K. ASTM D5385 – Standard Test Method for Hydrostatic Pressure Resistance of Waterproofing Membranes

L. ASTM E96 – Standard Test Methods for Water Vapor Transmission of Materials

M. ASTM E154 – Standard Test Methods for Water Vapor Retarders Used in Contact with Earth Under Concrete Slabs, on Walls, or as Ground Cover

1.06 SUBMITTALS

A. The WATERPROOFING, DAMPROOFING, AND CAULKING SUBCONTRACTOR shall submit the following in accordance with the requirements of the General Conditions and Section 01 33 00 – Submittal Procedure of the contract.

1. Samples: Submit for approval the following:

   a. Each component of thermoplastic sheet waterproofing system 12-inch by 12-inch for sheet, board and drainage panel and 12-inch lengths of each strip material specified for the Work.

   b. Samples will be reviewed by Engineer for general appearance and as examples of the types of components to be installed on the job mock-ups. Compliance with other requirements is the responsibility of WATERPROOFING, DAMPROOFING, AND CAULKING SUBCONTRACTOR.

2. Working Drawings: Submit for approval the following:

   a. Copies of specifications, installation instructions and general recommendations from the thermoplastic sheet waterproofing manufacturer, for each type of thermoplastic sheet waterproofing product required. Include manufacturer's data substantiating that the materials comply with the requirements.

b. Drawings showing extent of each component of each system used in the Work and all details required for the Work referencing required system components provided as samples to Engineer. Provide Working Drawings showing all construction, and other conditions encountered in the Work and manufacturer's approved and recommended details appropriate to waterproof joints and transitions as required for full waterproofing system waterproof performance whether or not specific indication is made on the Contract Drawings to the details of the specified manufacturer.

3. Test Reports: Submit for approval the following:

a. Copies of test reports verifying compliance with physical properties specified herein.

b. Copies of testing agencies background and experience in performing similar tests to those specified.

B. Certificates: Submit for approval copies of certificates stating that the thermoplastic sheet waterproofing systems installer has been approved or is a licensee of the thermoplastic sheet waterproofing manufacturer.

C. SUBCONTRACTOR's Review: Accompanying approval request, submit to Engineer a written statement signed by the WATERPROOFING, DAMPROOFING, AND CAULKING SUBCONTRACTOR, stating that the Contract Drawings and Specifications for waterproofing of cast-in-place below-grade concrete walls and foundations have been reviewed with an agent of the thermoplastic sheet waterproofing manufacturer and that he is in agreement that the selected systems are proper, compatible and that the details shown are not in conflict with the thermoplastic sheet waterproofing manufacturer's details. Show by copy of transmittal form that a copy of the statement has been transmitted to the manufacturer.

D. Statement of Application: Upon completion of the thermoplastic sheet waterproofing Work, submit a notarized statement to Engineer signed by the WATERPROOFING, DAMPROOFING, AND CAULKING SUBCONTRACTOR stating that the Work complies with the requirements of these Specifications and the installation methods were proper and adequate for the conditions of installation and use.

1.07 QUALITY ASSURANCE

A. Source Quality Control:

1. Engage a single manufacturer who shall provide the services of a Technical Representative who shall assist the WATERPROOFING, DAMPROOFING, AND CAULKING SUBCONTRACTOR and Engineer by providing technical opinions on the adequacy of materials and methods of installation based on Working Drawings approved by Engineer.

2. Provide such services during the time of delivery, storage, handling and installation of all thermoplastic sheet waterproofing components, up to and including placement of crushed stone trench drains and completion of backfilling operations.

3. Provide a manufacturer who will provide complete technical services including preparation and review of Working Drawings, installation methods and proposed detailing for the Work. Where the manufacturer requires additions, or changes to the Contract Documents these shall be made at no additional expense to the Owner and only as acceptable to Engineer.

4. Provide only the highest quality materials and methods of construction and installation as recommended by the manufacturer and as acceptable to Engineer.

B. Installer Qualifications:

1. Engage a single installer skilled, trained and with 5 years of successful experience in the application of each product who is certified by the manufacturer, or who can submit evidence in writing of being acceptable to the manufacturer and who agrees to employ only tradesmen with specific skill and successful experience in this type of Work. Submit names and qualifications to Engineer along with the following information on a minimum of three successful projects:

a. Names and telephone numbers of owners, architects or engineers responsible for projects.

b. Approximate contract cost of the thermoplastic sheet waterproofing.

c. Amount of area installed.

2. Submit proof of certification of installer by manufacturer to Engineer.

C. Performance Criteria:

1. Contractor's Review: Accompanying approval request, submit to engineer a written statement signed by the WATERPROOFING, DAMPROOFING, AND CAULKING SUBCONTRACTOR, stating that the Contract Drawings and Specifications have been reviewed with an agent of the thermoplastic sheet waterproofing material manufacturer and that he is in agreement that the selected systems are proper and compatible and that the details used for the Work are not in conflict with the manufacturer's details.

2. Statement of Application: Upon completion of the Work, submit a notarized statement to Engineer signed by the WATERPROOFING, DAMPROOFING, AND CAULKING SUBCONTRACTOR stating that the Work complies with the requirements of the manufacturer's printed instructions and were proper and adequate for the condition of installation and use.

D. Testing Agency: Engage a testing laboratory regularly engaged in the testing of construction materials, and who complies with ASTM E329.

1.08 DELIVERY, STORAGE AND HANDLING

A. Delivery of Materials:

1. Deliver materials in thermoplastic sheet waterproofing manufacturer's original, unopened and undamaged containers, with information accurately representing container contents as approved by Engineer at time of Working Drawing submission.

a. Include the following information on the label:

1) Name of material and supplier.

2) Installation, handling and protection requirements.

2. Deliver materials in sufficient quantities to allow uninterrupted continuity of the Work.

B. Storage of Materials:

1. Store materials in original, undamaged containers with manufacturer's labels and seals intact.

2. Store all materials in a dry, enclosed area, off the ground and away from all possible contact with water.

3. Prevent damage to materials during storage primarily by minimizing the amount of time they are stored at the site before being incorporated into construction systems.

C. Handling of Materials:

1. Do not expose materials to detrimental conditions or physical damage. Materials which are so exposed shall be removed from the site and shall not be incorporated into the Work.

2. Handle materials in a manner which prevents inclusion of foreign materials.

3. Do not open packages or containers until all necessary preparatory work is complete and installation will begin immediately. Do not allow materials to become wet or soiled or covered with ice or snow.

1.09 PROJECT CONDITIONS

A. Environmental Conditions:

1. Proceed with thermoplastic sheet waterproofing work only when temperature and moisture conditions comply with the waterproofing manufacturer's written recommendations and when no rain or other damaging environmental condition is forecast for the time when the materials will be exposed to potential damage.

2. Protect Work from precipitation, frost and direct sun. Erect temporary shelters to protect Work in progress.

3. Proceed with thermoplastic sheet waterproofing only when weather conditions will permit unrestricted use of materials and quality control of the Work being installed, complying with the Specification requirements and with the recommendations of the thermoplastic sheet waterproofing manufacturer.

4. Record decisions, conditions and agreements to proceed with the Work when weather conditions might be unfavorable. State the reasons for proceeding, with the names of the persons involved along with the changes, if any, or revisions, requirements or terms of the Contract.

B. Pre-installation Conference: Prior to the installation of each thermoplastic sheet waterproofing system and associated work, the Contractor shall schedule and meet at the site with the WATERPROOFING, DAMPROOFING, AND CAULKING SUBCONTRACTOR, sheet membrane waterproofing installer and the foreman of the installer who will perform the work, the installer of each component of associated work, the installers of substrate construction to receive the waterproofing work, the installers of other work in and around the thermoplastic sheet waterproofing work which must follow the waterproofing work, including mechanical work, if any, the Engineer and other representatives directly concerned with performance of the Work including where applicable, test agencies, product manufacturers, governing authorities and the Owner. Record the discussions of the conference and the decisions and agreements (or disagreements) and furnish a copy of the record to each party attending. Review foreseeable methods and procedures related to the waterproofing Work, including but not necessarily limited to, the following:

1. Review project requirements, including Contract Drawings, Specifications, approved Working Drawings and other Contract Documents.

2. Review required samples and submittals, both completed and yet to be completed.

3. Review status of substrates.

4. Review availability of materials, tradesman, equipment and facilities needed to make progress, avoid delays and protect the Work from damaging conditions until fully built into construction systems.

5. Review required inspection, testing, certifying and accounting procedures.

6. Review weather and forecasted weather conditions, and procedures for coping with unfavorable conditions.

7. Review regulations concerning code compliance, environmental protection, health, safety, fire and similar considerations.

    a. Reconvene the meeting at the earliest opportunity if additional information must be developed in order to conclude the subjects under consideration.

    b. Record any revisions or changes agreed upon, reasons therefore, and parties agreeing or disagreeing with them.

C. Scheduling:

1. Proceed with the thermoplastic sheet waterproofing and associated work required for a completely finished below-grade waterproofing system only after projections and penetrations through the substrates have been installed, and when the substrate construction and framing of openings is complete.

    a. Proceed with and complete the Work only when materials, equipment and tradesmen required for the installation of the insulation, crushed stone trench drain, geotextile filter fabric, pavers and backfilling operations are at the site and are ready to follow with the Work in a manner which will not leave the thermoplastic sheet waterproofing vulnerable to damage or deterioration.

2. Do not advance the installation of thermoplastic sheet waterproofing materials beyond that which is necessary for proper sequencing of the Work and for which there is proper and secure protection from damaging weather and construction activities.

3. Schedule the installation of backfilling operations and perimeter insulation, gravel and pavers and other adjoining and substrate Work to coordinate with the Work of this Section in order to provide a successful, waterproof installation of the thermoplastic sheet waterproofing Work.

D. Substitutions:

1. Do not change products, system components, or manufacturers after Working Drawing approval by Engineer.

2. Clearly identify, in a manner which is highlighted to Engineer, all proposed substitutions, modifications, variations, unspecified features and "or equal" products. Provide complete comparative data with specified products at time of Working Drawing submission.

1.10 WARRANTY AND BOND

A. WATERPROOFING, DAMPROOFING, AND CAULKING SUBCONTRACTORr shall warrant directly to the Owner the weather and watertightness of the thermoplastic sheet waterproofing system for a period of five years after Final Acceptance of the Work by the Owner. Imperfections, by reason of defective materials, workmanship, arrangement of the various parts or failure caused by improperly protecting the work during installation or storage of materials shall be made good to the satisfaction of the Owner at WATERPROOFING, DAMPROOFING, AND CAULKING SUBCONTRACTOR's expense.

B. Thermoplastic sheet waterproofing: Provide written five year material warranty issued by the membrane manufacturer upon completion of work.

C. Provide the Owner with a written warranty, signed by the WATERPROOFING, DAMPROOFING, AND CAULKING SUBCONTRACTOR, agreeing to repair or replace thermoplastic sheet waterproofing systems which fail to perform as a watertight barrier.

D. Cracks less than 1/8 inch shall not be considered structural failure. Minor defects shall not invalidate the five year warranty.

E. Provide a guarantee bond from an approved surety company that fully assures the Owner of faithful performance under the warranty.

PART 2 – PRODUCTS

2.01 MANUFACTURERS

A. Basis of Design: Grace Construction Products

B. Sika USA

C. The Henry Company

2.02 MATERIALS

A. Thermoplastic sheet waterproofing system (Pour-in-place Concrete): “PrePrufe® System 300R Plus Membrane” by Grace Construction Products or approved equal; pre-applied composite sheet membrane comprising 0.5 mm (0.020 in.) minimum of high density polyethylene film, and layers of specially formulated synthetic adhesive layers. The membrane shall form an integral and permanent bond to poured concrete to prevent water migration at the interface of the membrane and structural concrete. No special adhesive or heat shall be required to form laps.

1. Thermoplastic sheet waterproofing: The physical properties of the thermoplastic sheet waterproofing shall conform to the following:

Property	Test Method	Typical Value

Film Thickness	ASTM D 3767 Method A	1.2 mm (0.046 in.) nominal
Low Temperature Flexibility	ASTM D 1970	Unaffected at -23°C (-10°F)
Elongation	ASTM D 412 Modified [1]	>300%
Crack Cycling at -23°C (-10°F), 100 Cycles	ASTM C 836	Unaffected
Tensile Strength, Film	ASTM D 412	27.6 MPa (4,000 psi) minimum
Peel Adhesion to Concrete	ASTM D 903 Modified [2]	880 N/m (5.0 lbs/in.)
Resistance to Hydrostatic Head	ASTM D 5385 Modified [3]	70 m (271 ft) minimum
Puncture Resistance	ASTM E 154	880 N/m (221 lbs) minimum
Permeance	ASTM E 96 Method B	<0.6 ng/m^{2}sPa (0.01 perms)
Water Absorption	ASTM D 570	<0.5%
1. Elongation of membrane is run at a rate of 50 mm (2 in.) per minute. 2. Concrete is cast against the protective coating surface of the membrane and allowed to cure (7 days minimum). Peel adhesion of membrane to concrete is measured at a rate of 50 mm (2 in.) per minute at room temperature. 3. Hydrostatic head tests are performed by casting concrete against the membrane with a lap across a 1 mm (0.040 in) crack.		

B. Thermoplastic sheet waterproofing Post Applied (Concrete after forms are striped) Bituthene® 4000 by Grace Construction Products; a self-adhesive, cold-applied composite sheet consisting of a thickness of 1.4 mm (0.056 in.) of rubberized asphalt and 0.1 mm (0.004 in.) of cross-laminated, high density polyethylene film. Provide rubberized asphalt membrane covered with a release sheet, which is removed during installation. No special adhesive or heat shall be required to form laps.

1. Thermoplastic sheet waterproofing: The physical properties of the Bithuthene 4000 Membrane are as follows:

Property	**Test Method**	**Typical Value**
Color		Dark gray-black
Thickness	ASTM D 3767 Method A	1.5 mm (0.060 in.) nominal
Flexibility, 180° bend over 25 mm (1 in.) mandrel at -43°C (-45°F)	ASTM D 1970	Unaffected
Tensile Strength, Membrane Die C	ASTM D 412 Modified [1]	2240 kPa (325 psi) minimum
Tensile Strength, Film	ASTM D 882 Modified [1]	34.5 MPa (5,000 psi) minimum
Elongation, Ultimate Failure of Rubberized Asphalt	ASTM D 412 Modified [1]	300% minimum
Crack Cycling at -32°C (-25°F), 100 Cycles	ASTM C 836	Unaffected
Lap Adhesion at Minimum Application Temperature	ASTM D 1876 Modified [2]	880 N/m (5 lbs/in.)
Peel Strength	ASTM D 903 Modified [3]	1576 N/m (9 lbs/in.)
Puncture Resistance, Membrane	ASTM E 154	222 N (50 lbs) minimum

Property	Test Method	Typical Value
Resistance to Hydrostatic Head	ASTM D 5385	70 m (231 ft) of water
Permeance	ASTM E 96, Section 12 – Water Method	2.9 ng/m^{2}sPa (0.05 perms) maximum
Water Absorption	ASTM D 570	0.1% maximum
1. The test is run at a rate of 50 mm (2 in.) per minute. 2. The test is conducted 15 minutes after the lap is formed and run at a rate of 50 mm (2 in.) per minute at -4°C (25°F). 3. The 180° peel strength is run at a rate of 300 mm (12 in.) per minute.		

PART 3 – EXECUTION

3.01 GENERAL

A. Protection Board:

1. Expanded Polystyrene Protection Board: 25 mm (1 in.) thick for vertical applications with the following characteristics. Adhere to waterproofing membrane with Bituthene Protection Board Adhesive.

2. Normal Density: 16 kg/m^3 (1.0 lb/ft^3)

3. Thermal Conductivity, K factor: 0.24 at 5°C (40°F), 0.26 at 24°C (75°F)

4. Thermal Resistance, R-Value: 4 per 25 mm (1 in.) of thickness.

B. Waterstop: AdcorTM ES hydrophilic non-bentonite waterstop for non-moving concrete construction joints.

C. Miscellaneous Materials: Tape and other accessories specified or acceptable to manufacturer of pre-applied waterproofing membrane.

3.02 INSPECTION

A. The WATERPROOFING, DAMPROOFING, AND CAULKING SUBCONTRACTOR shall examine the surfaces to receive the thermoplastic sheet waterproofing, and the conditions under which the thermoplastic sheet waterproofing Work is to be performed and notify Engineer in writing of any condition detrimental to the proper and timely completion of the Work and the performance of the waterproofing systems. Do not proceed with the thermoplastic sheet waterproofing Work until unsatisfactory conditions have been corrected in a manner acceptable to Engineer.

B. All cast-in-place concrete shall have cured a minimum of two days prior to commencement of thermoplastic sheet waterproofing systems Work.

3.03 SUBSTRATE PREPARATION

A. Thermoplastic sheet waterproofing Post Applied: Refer to manufacturer's literature for requirements for preparation of substrates. Surfaces shall be structurally sound and free

of voids, spalled areas, loose aggregate and sharp protrusions. Remove contaminants such as grease, oil and wax from exposed surfaces. Remove dust, dirt, loose stone and debris. Use repair materials and methods which are acceptable to manufacturer of thermoplastic sheet waterproofing.

B. Thermoplastic sheet waterproofing Post Applied: Cast-In-Place Concrete Substrates:

1. Do not proceed with installation until concrete has properly cured and dried (minimum 7 days for normal structural concrete and minimum 14 days for lightweight structural concrete).

2. Fill form tie rod holes with concrete and finish flush with surrounding surface.

a. Repair bugholes over 13 mm (0.5 in.) in length and 6 mm (0.25 in.) deep and finish flush with surrounding surface.

b. Remove scaling to sound, unaffected concrete and repair exposed area.

c. Grind irregular construction joints to suitable flush surface.

C. Provide exterior below-grade walls of cast-in-place concrete free from voids and sharp projections before placing any thermoplastic sheet waterproofing Work.

D. Remove surface irregularities on cast-in-place concrete and fill all holes, honeycombs, spalls and cracks using manufacturer's recommended joint seal parging. Repair areas of unacceptable consolidation.

E. Remove grease, oil and other contaminants from surfaces of cast-in-place concrete and clean all surfaces with vacuums cleaners. Remove all dust, loose stones and debris.

F. Parge all construction joints to a minimum depth of 1/8 inch and 3 inch minimum width using manufacturer's recommended joint seal parging.

G. Seal all through wall projections using joint seal parging.

3.04 INSTALLATION

A. Refer to manufacturer’s literature for recommendations on installation, including but not limited to, the following:

B. Apply surface conditioner at rate recommended by manufacturer. Recoat areas not waterproofed if contaminated by dust. Mask and protect adjoining exposed finish surfaces to protect those surfaces from excessive application of surface conditioner.

1. Delay application of membrane until surface conditioner is completely dry. Dry time will vary with weather conditions.

2. Seal daily terminations with troweled bead of mastic.

3. Provide Flashing overlap and seal to with work of 07 26 13 – Above Grade Vapor Retarders.

C. Thermoplastic sheet waterproofing Post Applied: Apply primer at rate recommended by manufacturer. Recoat areas not waterproofed if contaminated by dust. Mask and protect adjoining exposed finish surfaces to protect those surfaces from excessive application of primer.

1. Delay application of membrane until primer is completely dry. Dry time will vary with weather conditions.

2. Seal daily terminations with troweled bead of mastic.

3. Apply protection board and related materials in accordance with manufacturer's recommendations.

4. Apply protection board and related materials in accordance with manufacturer's recommendations.

3.05 CLEANING AND PROTECTION

A. Remove any masking materials after installation. Clean any stains on materials which would be exposed in the completed work.

B. Protect completed membrane waterproofing from subsequent construction activities as recommended by manufacturer.

3.06 ADJUSTMENT AND CLEANING

A. Do not allow construction traffic which is not associated with the installation of the thermoplastic sheet waterproofing and related materials in the area of Work. Protect the area from access by other installers and Contractors until the Work of this Section has been incorporated into finished construction systems.

B. System components which are dislodged, damaged, expanded, broken penetrated or crushed by subsequent installation operations or damaged by detrimental weather shall be immediately replaced with undamaged material in compliance with the Specifications and properly protected as specified.

C. Only the original installer shall repair or replace deteriorated or defective Work.

3.07 INSPECTION AND ACCEPTANCE

A. Certify that the completed thermoplastic sheet waterproofing Work is in accordance with the Specifications and is waterproof at the time of Final Acceptance. The following are standard manufacturer's details applicable to similar conditions for this project:

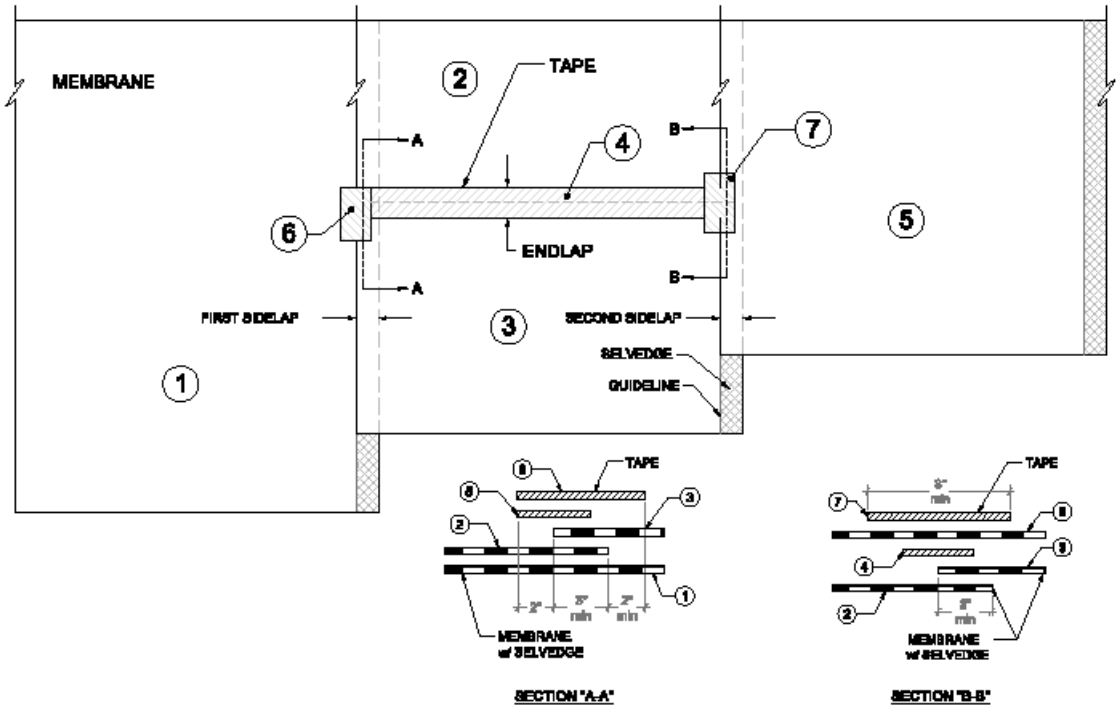

NOTE: INSTALL MEMBRANE AND TAPE IN ORDER AS SHOWN BY NUMBERS.

END LAP DETAIL FOR WALL OR SLAB - OPTION 2
TAPE APPLIED BEFORE INSTALLATION OF 2ND SIDE LAP
WATERPROOFING SYSTEM

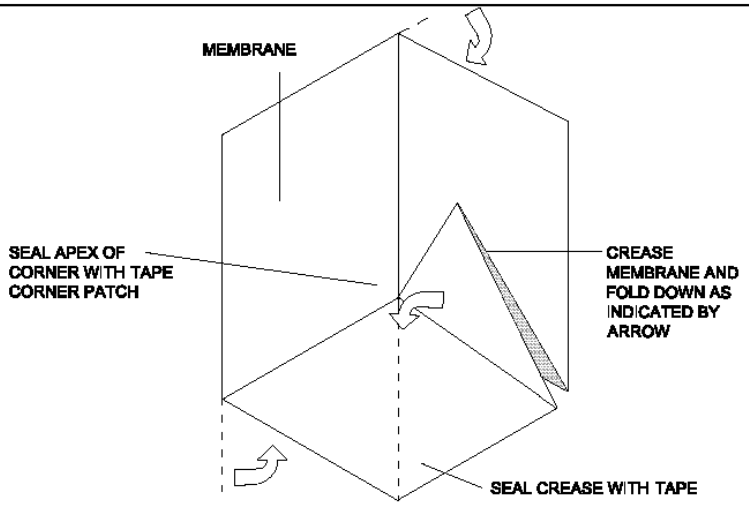

FOOTNOTE: DO NOT TAPE FOLD ONTO EITHER VERTICAL FACE

INSIDE CORNER

WATERPROOFING SYSTEM

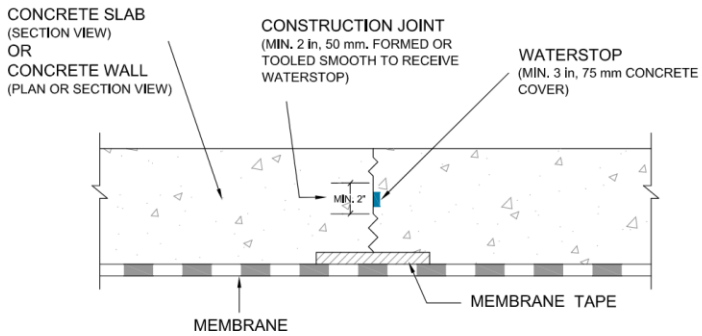

NOTE: ALTERNATE WATERSTOP MAY BE REQUIRED BASED ON DESIGN CONDITIONS

CONSTRUCTION JOINT (OPTION-A)
WATERPROOFING SYSTEM

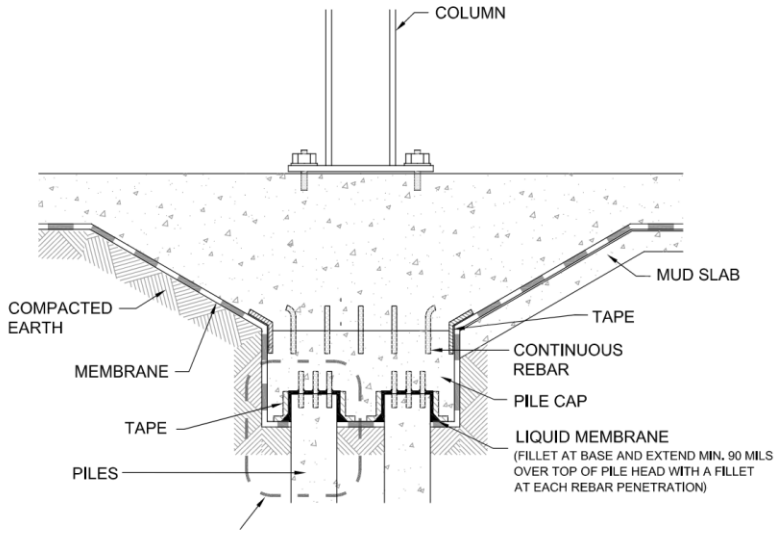

Grade Beam Pile Cap
Option 1
WATERPROOFING SYSTEM

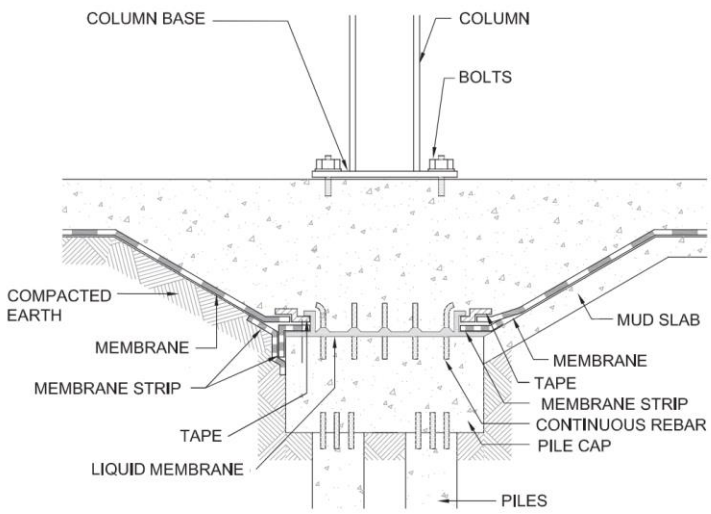

Grade Beam Pile Cap
Option 2
WATERPROOFING SYSTEM

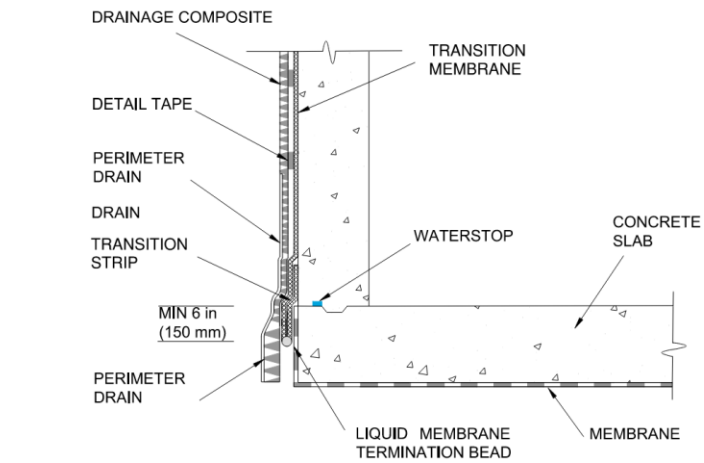

NOTE - ALTERNATE WATERSTOP MAY BE REQUIRED BASED ON DESIGN CONDITIONS

FOUNDATION WALL
FLUSH TO STRUCTURAL SLAB
WATERPROOFING SYSTEM

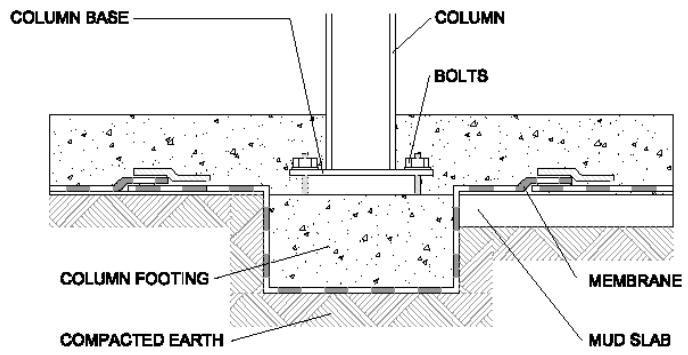

COLUMN
(OPTION 2)
WATERPROOFING SYSTEM

END OF SECTION

ATTACHMENT J – 07 27 26 FLUID-APPLIED MEMBRANE AIR BARRIERS

DIVISION 07

WATERPROOFING, DAMPROOFING, AND CAULKING

(Filed Sub Bid Required)

SECTION 07 27 26

FLUID-APPLIED MEMBRANE AIR BARRIERS[1]

PART 1 – GENERAL

1.01 FILED SUB-BID REQUIREMENTS

A. This Section is part of the filed sub-bid for Division 07 Waterproofing, Damproofing and Caulking. See Division 7 Thermal and Moisture Protection.

1.02 SECTION INCLUDES

A. Wall system air barriers as specified herein shall include, but not be limited to, materials and installation methods for fluid-applied air barrier membrane system located for cavity wall surfaces under no hydrostatic pressure.

B. Wall system air barriers shall be provided where shown on the Contract Drawings, specified in this Section, or as required for a complete installation including materials and installation methods to bridge and seal air leakage pathways in roof and foundation junctions, window and door openings, control and expansion joints, masonry ties, securing fasteners, piping, and other penetrations through the wall assembly.

1.03 REFERENCES

A. The following standards and publications are applicable to the extent referenced in the text. The most recent version of these standards is implied unless otherwise stated.

1. ASTM C1280 Standard Specification for Application of Exterior Gypsum Panel Products for Use as Sheathing

2. ASTM D412 Standard Test Methods for Vulcanized Rubber and Thermoplastic Elastomers- Tension

3. ASTM D4541 Standard Test Method for Pull-Off Strength of Coatings Using Portable Adhesion Testers

4. ASTM D7234 Standard Test Method for Pull-Off Adhesion Strength of Coatings on Concrete Using Portable Pull-Off Adhesion Testers

[1] Addendum No. 5

5. ASTM E84 Standard Test Method for Surface Burning Characteristics of Building Materials.

6. ASTM E96 Test Methods for Water Vapor Transmission of Materials

7. ASTM E283 Standard Test Method for Determining the Rate of Air Leakage Through Exterior Windows, Curtain Walls, and Doors Under Specified Pressure Differences Across the Specimen

8. ASTM E783 Standard Test Method for Field Measurement of Air Leakage Through Installed Exterior Windows and Doors.

9. ASTM E1105 Standard Test Method for Field Determination of Water Penetration of Installed Exterior Windows, Skylights, Doors, and Curtain Walls by Uniform or Cyclic Static Air Pressure Difference.

10. ASTM E2178 Standard Test Method for Air Permeance of Building Materials

11. ASTM E2357 Standard Test Method for Determining Air Leakage of Air Barrier Assemblies

12. GA-253-2018 Application of Gypsum Sheathing

13. MSBC Massachusetts State Building Code

14. MECC Massachusetts Energy Conservation Code

15. NFPA 285 Standard Fire Test Method for Evaluation of Fire Propagation Characteristics of Exterior Wall Assemblies Containing Combustible Components

1.04 RELATED SPECIFICATIONS

A. Section 01 91 00 – Building Systems Commissioning

B. Section 03 30 00 - Cast-in-Place Concrete

C. Section 04 22 23.23 - Prefaced Concrete Unit Masonry

D. Section 06 10 00 - Rough Carpentry

E. Section 07 21 00 - Thermal Insulation

F. Section 07 42 63 - Cementitious Wall Panels

G. Section 07 52 00 - Built-Up Bituminous Roofing

H. Section 09 29 00 - Gypsum Drywall System

1.05 QUALITY ASSURANCE

A. Source Quality Control:

1. Engage a single manufacturer who shall provide the services of a Technical Representative who shall assist the WATERPROOFING, DAMPROOFING, AND CAULKING SUBCONTRACTOR and the Engineer by providing technical opinions on the adequacy of materials, methods of installation and field testing methodology and significance of test results based on Working Drawings approved by the Engineer.

2. Materials: For each type of material required for the work of this section, provide primary materials that are the products of one manufacturer.

3. Provide such services during the time of delivery, storage, handling, job mock-up construction, installation and testing of all components.

B. Installer Qualifications:

1. Engage a single installer skilled, trained and with successful experience in the application of each product who is a licensee of the manufacturer, or who can submit evidence in writing of being acceptable to the manufacturer and who agrees to employ only tradesmen with specific skill and successful experience in this type of work. Submit name and qualifications to the Engineer along with the following information on a minimum of three successful projects:

   a. Names and telephone numbers of owners, architects or engineers responsible for projects.

   b. Approximate contract cost of the work

   c. Size of area installed

      1) Installer must show evidence of adequate equipment and trained field personnel to successfully complete the project in a timely manner.

      2) Submit proof of acceptability of installer by manufacturer to the Engineer.

C. Job Mock-Ups:

1. Prior to the installation of air barrier, but after Engineer's approval of Working Drawing submittals, erect stepped-back job mock-ups using substrate preparation, materials and application techniques specified and approved for final work. Provide all components of the air barrier showing the correct installation, substrate preparation and the workmanship quality which shall be achieved in the work. Build mock-ups at the site, in location approved by the Engineer, of full thickness

and approximately 4 feet long and 4 feet square. Indicate the proposed workmanship to be expected in the finished work. Obtain the Engineer's acceptance of mock-ups before start of work. Retain and protect mock-ups before start of work. Retain and protect mock-ups during construction as a standard of judging completed work. Do not alter or destroy mock-ups until given written permission by the Engineer.

2. Build as many job mock-ups as necessary m order to achieve the Engineer's acceptance of the work.

3. Work which proceeds without approved job mock-ups shall be stopped, removed and re-installed, after job mock-up approval, at no additional expense to the Owner.

1.06 PERFORMANCE REQUIREMENTS

A. Provide an air barrier system to perform as a continuous vapor impermeable air barrier and as a liquid-water drainage plane flashed to discharge to the exterior incidental condensation or water penetration. Air barrier assemblies shall be capable of accommodating substrate movement and of sealing substrate expansion and control joints, construction material changes, and transitions at perimeter conditions without deterioration and air leakage exceeding specified limits.[2]

B. Air Barriers: The building envelope shall be designed and constructed with a continuous air barrier to control air leakage into, or out of the conditioned space. An air barrier shall also be provided for interior partitions between conditioned space and space designed to maintain temperature or humidity levels which differ from those in the conditioned space by more than 50% of the difference between the conditioned space and design ambient conditions. The air barrier shall have the following characteristics:

1. It must be continuous, with all joints made airtight. It shall have an air permeability not to exceed 0.004 cfm/ft2 under a pressure differential of 0.3 in. water. (1.57 psf.) (equal to 0.02L/s/m2 @ 75 Pa.).

2. It shall be capable of withstanding positive and negative combined design wind, fan and stack pressures on the envelope without damage or displacement, and shall transfer the load to the structure. It shall not displace adjacent materials under full load.

3. It shall be durable or maintainable. The air barrier shall be joined in an airtight and flexible manner to the air barrier material of adjacent systems, allowing for the relative movement of systems due to thermal and moisture variations and creep. Connection shall be made between:

[2] Addendum No.2

a. Foundation waterproofing and walls.

b. Walls, curtain walls, storefronts, windows, louvers or doors.

c. Different wall systems.

d. Wall and roof connections.

e. Wall, floor and roof over unconditioned space.

f. Walls, floor and roof across construction, control and expansion joints.

g. Walls, floors and roof to utility, pipe and duct penetrations.

C. Performance of Air Barrier System will be tested in accordance with Section 01 91 00 – Building Systems Commissioning. [2]

1.07 SUBMITTALS

A. The WATERPROOFING, DAMPROOFING, AND CAULKING SUBCONTRACTOR shall submit the following in accordance with the requirements of Specification 01 33 00 – Submittal Procedure.

B. Product Data: Submit manufacturer's product data, copies of specifications, installation instructions, and substrate preparation and general recommendations from the manufacturer. Shop drawings: Show the locations and extent of air and vapor barrier system including details of typical conditions, intersections with other envelope systems and materials including flashings, sealants around miscellaneous penetrations such as conduits, pipes, etc. and details showing how gaps in the construction will be bridged and sealed.

C. Samples: Submit for approval the following:

1. Air barrier system applied to a 12-inch by 12-inch by 2-inch thick concrete sample demonstrating specified surface preparation to be used on job mock-up and specified thickness of fluid-applied waterproofing. Apply waterproofing to only one-half of the sample board, leaving the other half visible and showing specified substrate preparation.

2. Samples will be reviewed by Engineer for general appearance and as examples of the types of components to be installed on the job mock-ups. Compliance with other requirements is the responsibility of the WATERPROOFING, DAMPROOFING, AND CAULKING SUBCONTRACTOR.

D. Test Reports: Submit for approval the following:

1. Copies of test reports verifying compliance with physical properties specified herein and verification that the materials are compatible with cavity wall insulation specified in Detailed Specification 07 21 00-Thermal Insulation.

2. Copies of test reports verifying NFPA 285 wall assembly compliance.

3. Copies of testing agencies background and experience in performing similar tests to those specified.

E. Certificates: Submit for approval the following:

1. Copies of certificates stating that the installer has been approved, or is a licensee of the manufacturer.

2. Evidence of installer's experience.

3. Evidence prior to delivery that materials and components furnished conform with the requirements of the Specifications.

F. Statement of Application: Upon completion of the work, submit a notarized statement to the Engineer signed by the WATERPROOFING, DAMPROOFING, AND CAULKING SUBCONTRACTOR stating that the work complies with the requirements of these Specifications and the installation methods were proper and adequate for the conditions of installation and use.

1.08 DELIVERY, STORAGE AND HANDLING

A. Delivery of Materials:

1. Deliver materials in manufacturer's original, unopened and undamaged containers, with information accurately representing container contents as approved by the Engineer at time of Working Drawing submission.

2. Include the following information on the label:

a. Name of material and supplier.

b. Installation, handling and protection requirements.

3. Deliver materials in sufficient quantities to allow uninterrupted continuity of the work.

B. Storage of Materials:

1. Store materials in original, undamaged containers with manufacturer's labels and seals intact.

2. Store all materials in a dry, enclosed area, off the ground and away from all possible contact with water and in a location where temperature can be constantly maintained between 60°F and 75°F and out of direct sunlight.

3. Prevent damage to materials during storage primarily by minimizing the amount of time they are stored at the site before being incorporated into construction systems.

C. Handling of Materials:

1. Do not open containers, or expose materials to detrimental conditions or physical damage. Materials which are so exposed shall be removed from the site and shall not be incorporated into the work.

2. Handle materials in a manner which prevents contamination and inclusion of foreign materials.

3. Do not open packages or containers until all necessary preparatory work is complete, approved and installation will begin immediately. Do not allow materials to become wet or soiled or covered with ice or snow.

1.09 JOB CONDITIONS

A. Environmental Conditions:

1. Proceed with Work only when temperature and moisture conditions comply with the manufacturer's written recommendations and when no rain or other damaging environmental condition is forecast for the time when the materials will be exposed to potential damage.

2. Protect work from precipitation, frost and direct sun. Erect temporary shelters to protect work in progress.

3. Proceed with air and vapor barrier only when weather conditions will permit unrestricted use of materials and quality control of the work being installed, complying with the Specifications and with the recommendations of the air barrier manufacturer, and only when manufacturer and installer are willing to guarantee the work as required without additional reservations and restrictions.

4. Record decisions, conditions and agreements to proceed with the work when weather conditions might be unfavorable. State the reasons for proceeding, with the names of the persons involved along with the changes, if any, or revisions, requirements or terms of the Contract.

B. Protection:

1. Provide continuous protection of materials against damage, wetting and moisture absorption primarily by storing materials under cover and above ground and away from other construction traffic.

2. Protect installed materials and completed systems against damage by construction activities. Exclude all persons not involved with the work from the work area until such time as the work has been isolated from all potential damage.

C. Substitutions:

1. Do not change products, system components, installation techniques or manufacturers after Working Drawing approval by the Engineer.

2. Clearly identify, in a manner which is highlighted to the Engineer, all proposed substitutions, modifications, variations, unspecified features and “or equal" products. Provide complete comparative data with specified products at time of Working Drawing submission.

1.10 GUARANTEES

A. Guarantee that all work performed under this Section is free from defects in material and workmanship and conforms to all standards in the manufacturer’s published data sheets. The WATERPROOFING, DAMPROOFING, AND CAULKING SUBCONTRACTOR shall warrant its air barrier work for a period of two years from the date of Final Acceptance of the work.

B. In addition, the manufacturer of the air barrier shall provide the Owner with a five year guarantee warranting the work watertight and free from defects in material, abnormal aging, workmanship, and arrangement of the various parts. Comply with all requirements of the manufacturer in order to provide guaranteed construction.

PART 2 – PRODUCTS

2.01 MANUFACTURERS

A. GCP Applied Technologies, 62 Whittemore Avenue, Cambridge, MA 02140. (877) 423-6491, Website: www.gcpat.com.

B. W.R. MEADOWS®, INC., 300 Industrial Drive / PO Box 338, Hampshire, IL 60140-0338. (800) 342-5976, Website: www.wrmeadows.com.

C. Henry Company, 999 N. Pacific Coast Highway, Suite 800, El Segundo, CA 90245. (800) 486-1278, Website: www.Henry.com

2.02 MATERIALS

A. General: Air barrier system shall be a single-component, fluid applied vapor impermeable air barrier membrane that cures to form a resilient, monolithic, fully bonded elastomeric sheet free of plasticizers, phthalates, and halogen. Product shall have the following minimum physical properties:

1. Air Permeance: ASTM E2178: Not to exceed 0.004 cfm/sq. ft. under a pressure differential of 1.57 psf (equal to 0.02 L/s/sq. m @ 75 Pa)

2. Assembly Air Permeance: ASTM E2357: Not to exceed 0.004 cfm/sq.ft. under a pressure differential of 1.57 psf (equal to 0.02 L/s/sq. m @ 75 Pa)

3. Water Vapor Permeance: ASTM E96, Method B: Less than 1 perm

4. Pull Adhesion: ASTM D4541: Min. 20 pli, or substrate failure

5. Elongation: ASTM D412 – Die C: Min. 550%

6. Pliability, Low Temperature Flexibility: ASTM D1970: Pass at -15°F (-26°C)

7. Nail Sealability (AAMA 711/ASTM D1970 modified): Pass

8. Fire Propagation Characteristics: Passes NFPA 285 testing as part of an approved assembly.

9. VOC Content, max (EPA Method 24): <50 g/L Method 24

2.02 TRANSITION MEMBRANE

A. Description: A self-adhered membrane that does not require a primer fabricated in various widths for detail areas conforming to the following:

1. Puncture Resistance: ASTM E154: 40 lbs. (178 N) min.

2. Lap Adhesion at 25°F (–4°C), ASTM D1876: 5.0 lbs./in. (880 N/m) of width min.

3. Pliability, Low Temperature Flexibility, ASTM D1970: Pass at -20°F (-29°C).

4. Tensile Strength, ASTM D412, Die C Modified: min. 400 psi (2.7 MPa)

5. Elongation, ASTM D412 Die C: min. 200%

2.03 FLEXIBLE MEMBRANE WALL FLASHING

A. Description: A 32 mil (0.8 mm) of self-adhesive rubberized asphalt integrally bonded to 8 mil (0.2 mm) of cross-laminated, high-density polyethylene film to provide a min. 40 mil (1.0 mm) thick membrane. Membrane shall be interleaved with disposable silicone-coated release paper until installed, conforming to the following:

1. Puncture Resistance, ASTM E 154: 80 lbs. (356 N) min.

2. Lap Adhesion at 25ºF (-4ºC), ASTM D1876: 5.0 lbs./in. (880 N/m) of width

3. Low Temperature Flexibility, ASTM D1970: Unaffected to -45ºF (-43ºC)

4. Tensile Strength, ASTM D412, Die C Modified: min. 800 psi (5.5 MPa)Elongation, ASTM D412, Die C: min. 200%

2.04 AIR BARRIER ACCESSORIES

A. Primer: Water-based primer which imparts an aggressive, high tack finish on the treated substrate.

1. Flash Point: No flash to boiling point

2. Solvent Type: Water

3. VOC Content: Not to exceed 10 g/l

4. Application Temperature: 20°F (-6°C) and above

B. Sealant and Liquid Flashing for Terminations and Flashing of Rough Openings: A single component moisture cure sealant designed for use with air barrier system. VOC content less than 20 g/l.

C. Liquid Membrane for Details, Terminations and Substrate Preparation: A two part, elastomeric, trowel grade material designed for use with self-adhered membranes and tapes. 10 g/l max. VOC Content.

D. Joint Reinforcing Fabric: Spun-bonded polyester fabric for reinforcement of flat joints and corner conditions with primary fluid-applied membrane.

PART 3 – EXECUTION

3.01 INSPECTION

A. The WATERPROOFING, DAMPROOFING, AND CAULKING SUBCONTRACTOR shall examine the surfaces to receive the fluid-applied membrane air barrier system, and the conditions under which the work is to be performed and notify the Engineer in writing of

all conditions detrimental to the proper and timely completion of the work and the performance of the fluid-applied membrane air barrier systems. Do not proceed with the fluid-applied membrane air barrier system work until unsatisfactory conditions have been corrected in a manner acceptable to the Engineer.

3.02 SUBSTRATE PREPARATION

A. Surfaces to receive fluid-applied membrane air barriers shall be clean and free of all foreign matter and visibly dry and free of moisture. Remove contaminants such as grease, oil and wax from exposed surfaces. Remove dust, dirt, loose stone, debris and any material that may interfere with proper adhesion of the air barrier to the substrate. Mask off adjoining surfaces not to receive air barrier to prevent spillage and overspray.

B. CONTRACTOR shall coordinate compliance with the manufacturer's instructions for the preparation of the substrates to receive the fluid-applied membrane air barrier system unless more stringent conditions are specified. Use repair materials and methods that are acceptable to manufacturer of the air barrier assembly.

C. Concrete Substrates: CONTRACTOR shall remove surface irregularities on cast-in-place concrete and fill all holes, honeycombs, spalls and cracks using manufacturer's recommended joint seal parging. Repair areas of unacceptable consolidation. Where necessary to remove sharp projections, grind concrete surfaces. Parge all construction joints to a minimum depth of 1/8 inch and 3 inch minimum width using manufacturer's recommended joint seal parging.

D. Masonry Substrates: MASONRY SUBCONTRACTOR shall remove surface irregularities and fill all voids and holes, particularly in the mortar joints, with a lean mortar mix, non-shrinking grout or parge coat. Mortar joints shall be struck full and flush with the surface of the masonry substrate to receive air barrier. Remove excess mortar from masonry ties, shelf angles, and other obstructions.

E. Exterior sheathing panels: LATHING AND PLASTERING SUBCONTRACTOR shall ensure that the boards are sufficiently stabilized with corners and edges fastened with appropriate screws in accordance with exterior sheathing manufacturers written instructions. At changes in substrate plane, apply a sealant acceptable to the air barrier manufacturer at sharp corners and edges to form a smooth transition from one plane to another. Cover gaps in substrate plane and form a smooth transition from one substrate plane to another with stainless-steel sheet mechanically fastened to structural framing to provide continuous support for air barrier.

3.03 INSTALLATION

A. Comply with manufacturer's instructions for the installation of fluid-applied membrane air barrier system.

1. Concrete substrate walls shall be cured for a minimum of 30 days prior to installation of vapor and air barrier system.

2. All cracks and non-working joints over 1/8 inch shall be filled using trowel grade material of the specified system.

3. Fill joints in exterior sheathing prior to application of field membrane in accordance with manufacturer's instructions.

B. Application of Transition Membranes: Apply transition membranes, before or after application of vapor and air barrier membrane. Connect and seal exterior wall air barrier membrane continuously to roofing membrane air barrier, roof expansion joint flanges, concrete below-grade structures, floor-to floor construction, exterior glazing and window systems, glazed curtain-wall systems, storefront systems, exterior louvers, exterior door framing, and other construction used in exterior wall openings, using accessory materials.

1. Prior to the installation of transition membranes, prime area to be detailed and allow to cure.

2. At end of each working day, seal top edge of membrane to substrate with termination sealant.

3. Wall Openings: Perimeter frame surfaces of windows, curtain walls, storefronts, and doors. Apply transition membrane so that a minimum of 3 inches (75 mm) of coverage is achieved over both substrates.

4. Install transition membranes below shelf angles, overlapping edge seams a minimum of 2" and end laps a minimum of 4".

C. Spray a continuous uniform film of fluid-applied membrane air barriers at application thickness according to texture and porosity of substrate using multiple, overlapping passes. When spraying use a cross-hatching technique (alternating horizontal and vertical passes) to ensure even thickness and coverage. When spraying use high pressure, airless sprays equipment approved by the manufacturer. Seal all brick-ties and other penetrations as work progresses. Carry air barriers a minimum of 2" onto the transition membranes. Review final application to ensure all substrates have been fully coated, and that there are no passages remaining for air infiltration / exfiltration, water vapor transmission or water penetration.

D. Inspect the transition and air barrier membrane prior to enclosing and repair any punctures, voids, deficient lapped seams and damaged areas in membrane. Slit and flatten fish-mouths and blisters. Patch with membrane sized to extend 6 in. (150 mm) beyond the area to be patched in all directions.

3.04 PROTECTION

A. Protect the area from access by other installers and Contractors until the work of this Section has been incorporated into finished construction systems.

B. Protect other work from spillage of air barrier materials and prevent materials from entering and clogging drains and conductors. Replace or restore other work which is soiled or otherwise damaged by the performance of the vapor and air barrier and associated work.

C. Insulation and/or protection products may be installed after all membranes have cured (16-24 hours and/or firm and dry to the touch). Schedule work so that the air and vapor barrier system is covered as soon as possible after installation. If the air barrier system cannot be covered within 30 days after installation, apply temporary UV protection such as dark plastic sheet or tarpaulins or as recommended by the manufacturer.

D. System components which are dislodged, damaged, or penetrated by subsequent installation operations or damaged by detrimental conditions shall be immediately replaced with undamaged material in compliance with the Specifications and properly protected as specified.

3.05 INSPECTION AND ACCEPTANCE

A. Certify that the completed cavity wall air barrier work is in accordance with the Specifications and is waterproof, of uniform thickness and without gaps, holidays or pinholes at the time of Final Acceptance.

END OF SECTION

10/01/18

ATTACHMENT K – 07 60 00 FLASHING AND SHEET METAL

SECTION 07 60 00
FLASHING AND SHEET METAL[1]

PART 1 – GENERAL

1.01 THE REQUIREMENT

A. This Section describes the general requirements for sheet metal flashing and trim for a complete water- and weather-tight installation complying with all governing codes and standards.

B. The Contractor shall provide all labor, materials, equipment, and incidentals necessary to perform the work of this Section as shown on the Contract Drawings, specified herein or required otherwise for a complete installation.

C. The Contractor shall implement practices and procedures to meet the project's sustainability goals as identified in the Contract Documents. The Contractor shall ensure that the sustainability requirements of this Section are implemented to the fullest extent.

1.02 RELATED WORK SPECIFIED ELSEWHERE

A. Section 04 22 23.23 – Prefaced Concrete Unit Masonry

B. Section 04 43 13 – Stone Masonry

C. Section 07 52 00 – Built-Up Bituminous Roofing

D. Section 07 70 00 – Roof Specialties and Accessories

E. Section 07 90 00 – Joint Fillers, Sealants and Caulking

1.03 REFERENCES SPECIFICATIONS, CODES AND STANDARDS

A. Without limiting the generality of these specifications Work shall conform to the applicable requirements of the following documents:

1. OF-506C – Flux, Soldering, Paste, and Liquid

2. ASTM A176 – Stainless and Heat-Resisting Chromium Steel Plate, Sheet and Strip

3. ASTM B32 – Specifications for Solder Metal

010219

1 Addendum No.5

4. ASTM D1187 – Test Method for Asphalt-Base Emulsions for use as Protective Coatings for Metal

5. FM Global Data Sheet 1-49, Perimeter Flashing

6. MSBC – Massachusetts State Building Code

7. SMACNA - "Architectural Sheet Metal Manual" by Sheet Metal and Air Conditioning Contractors National Association

1.04 SUBMITTALS

A. In accordance with the procedures and requirements set forth in Section 01 33 00 – Submittal Procedures, submittals shall include, but not be limited to the following:

1. Installer Qualifications: Submit names and qualifications to Engineer along with the following information on a minimum of three successful projects.

a. Names and telephone numbers of owners, architects or engineers, responsible for the projects.

b. Approximate contract prices for sheet metal flashing and trim.

c. Size of area installed.

B. Samples: Submit for approval the following:

1. Samples of sheet metal flashing and trim profiles, 12-inches long with all fasteners, clips, and supports required for the Work. 12-inch by 12-inch sheet of each item specified and 6-inch long pieces of each required system component to be used in the work.

2. Each fastener type required marked as to type of material and with their intended purpose in the work.

C. Shop Drawings: Submit for approval the following:

1. Copies of manufacturers’ specifications, installation instructions and general recommendations for sheet metal flashing and trim requirements.

2. Include manufacturer's data substantiating that the materials comply with the requirements.

3. Provide Shop Drawings showing the coordination of the Work with masonry and metal coping.

4. Provide detailed Shop Drawings showing all profiles of sheet metal flashing and trim systems to be used in the work, fully dimensioned, located, quantified and

presented such that sequence of installation is acceptable to each interfacing material supplier.

5. Large scale isometric drawings of all sheet metal and trim intersections and transitions, include all fastener locations and materials, cleats, and other miscellaneous accessories necessary to complete the Work as specified.

1.05 DELIVERY, STORAGE, AND HANDLING

A. Delivery of Materials:

1. Deliver materials in manufacturers' original, unopened and undamaged containers and rolls, with labels intact and legible and with information accurately representing container contents as approved by Engineer at time of Shop Drawing submission.

2. Items delivered in broken, damaged, rusted, or unlabeled condition shall immediately be removed from project site and not offered again for approval by Engineer.

B. Storage of Materials:

1. Store materials in an area protected from all construction traffic not associated with the work of this Section.

2. Store materials off the ground and in same package in which they were shipped, and on platforms protected from dirt and other contamination.

3. Store under cover and in a manner which does not permit water to remain on units.

C. Handling of Materials:

1. Protect all sheet metal flashing and trim work from dents, scratches, warps and bends.

2. Immediately after installation of each system component, remove all strippable protective films.

3. Comply with manufacturer's instructions for handling and installation of the ribbed metal cavity wall flashing materials, except where more stringent requirements are shown or specified.

PART 2 – PRODUCTS

2.01 MANUFACTURERS

A. Metal Flashing, Reglets, Termination Bar, and Counter Flashing Systems:

1. Riverside Sheet Metal, 15 Reardon Road, Medford, MA 02155. Tel: (781) 396-0070.

2. Cheney Flashing Company, 12100 Baltimore Avenue, Suite 4, Beltsville, MD 20705. Tel: (301) 931-2556.

3. Hohmann & Barnard, Inc., 30 Rasons Court, Hauppauge, NY 11788. Tel: (631) 234-0600.

2.02 MATERIALS

A. Metal Flashing

1. Exposed to View: Provide prefinished 0.050 inches aluminum. Finish shall be dark bronze anodized in accordance with AA-C22A44, Class 1. Provide a full-strength Kynar 500 baked-on paint finish with a 20 year warranty where additional color selections are required.

2. Concealed from View: Provide sheet stainless steel, Type 316 complying with ASTM A666, with No. 2D dead soft, fully annealed finish, unless required to be harder temper for proper forming and performance for applica¬tion indicated.

.

B. Interlocking Mechanically-Keyed, Ribbed Stainless Steel Flashing & Counterflashing System Associated with Concrete Unit Masonry:

1. Provide deformed sheet, stainless steel, Type 316 complying with ASTM A666 for all Work with No. 2D finish.

2. For flashing within concrete unit masonry wall system, through-wall flashing at spandrels and horizontal steel and concrete members in walls provide flashing with a mechanically-keyed, 3-way saw tooth design, which bonds in all directions and which has weep holes drainage at 3-inch intervals.

3. Provide a complete system of interlocking, mechanically-keyed components all by the same manufacturer including, but not limited to, cast-in-place mechanically-keyed and built-in-place mechanically-keyed masonry-reglets, through-wall metal masonry counterflashing and metal through-wall base flashing, and in other locations shown.

4. Thickness: Provide thickness of 26 gauge (0.018-inches).

C. Reglets shall be formed of 300 series stainless steel, minimum of 0.020 inch. Corners shall be factory made, mitered and sealed. Furnish reglets to proper trade in sufficient time to be incorporated into the masonry or concrete work.

1. Surface-Mounted Type: Provide with slotted holes for fastening to substrate, with neoprene or other suitable weatherproofing washers, and with channel for sealant at top edge.

2. Stucco Type: Provide with upturned fastening flange and extension leg of length to match thickness of applied finish materials.

3. Concrete Type: Provide temporary closure tape to keep reglet free of concrete materials, special fasteners for attaching reglet to concrete forms, and guides to ensure alignment of reglet section ends.

4. Masonry Type: Provide with offset top flange for embedment in masonry mortar joint.

5. Flexible Flashing Retainer: Provide resilient plastic or rubber accessory to secure flexible flashing in reglet where clearance does not permit use of standard metal counterflashing or where Drawings show reglet without metal counterflashing.

6. Counterflashing Wind-Restraint Clips: Provide clips to be installed before counterflashing to prevent wind uplift of counterflashing lower edge.

D. Termination Bars shall be 26 gauge units of type, material, and profile indicated, formed to provide secure interlocking of separate reglet and counterflashing pieces, and compatible with flashing indicated with factory- mitered and -welded corners and junctions.

1. Surface-Mounted Termination Bar Type: Provide with slotted holes for fastening to substrate, with neoprene or other suitable weatherproofing washers, and with channel for sealant at top edge.

2. Counterflashing Wind-Restraint Clips: Provide clips to be installed before counterflashing to prevent wind uplift of counterflashing lower edge.

E. Miscellaneous Materials:

1. Solder for Stainless Steel: ASTM B32, Lead-free; 96.5% Sn, 3.45% Cu, 1% Sb, 0.05% Ag used with an acid flux of the type recommended by the stainless steel manufacturer. Use a non-corrosive rosin flux over tinned surfaces.

2. Stainless Welding Rods: Type recommended by stainless steel sheet manufacturer for the type of metal sheets furnished.

3. Nails, screws, rivets, bolts and other fasteners: same material as sheet metal being attached. Nails shall be 18 gauge diameter shank, 1/4 inch diameter flat head, annular-thread, diamond point, long enough to penetrate backing by at least 1 inch. Nails shall be spaced 3 inches on center unless other spacing is indicated. Exposed fasteners shall match finish of metal being fastened.

4. Cleats: Same metal and gage as sheet being anchored, 2-inches wide, punched for two anchors.

5. Bituminous plastic cement shall conform to ASTM D4586.

6. Sealants shall be silicone type or as recommended for specific application.

7. Sealer tape shall be polyisobutylene tape specifically manufactured for setting flanges on bituminous roofing or as recommended by roofing manufacturer.

PART 3 – EXECUTION

3.01 FABRICATION

A. Shop fabricate Work to greatest extent possible. Comply with details shown and applicable requirements of SMACNA "Architectural Sheet Metal Manual" and other recognized industry standards. Fabricate for waterproof and weather resistant performance; with expansion provisions for running work, sufficient to permanently prevent leakage, and damage or deterioration of the work. Comply with material manufacturer's instructions and recommendations for forming material. Form exposed work without excessive oil-canning, buckling and tool marks, true to line and levels as indicated, with exposed edges folded back to form hems.

B. On all metal base and counterflashing, and trim provide completely shop-fabricated corners and special flashings; arc welded to insure watertight joints. Grind welds smooth so as to be indistinguishable from adjacent surfaces.

C. Roof penetration sheet metal work shall be provided and coordinated with the roofing system. The design and details shall conform to SMACNA "Architectural Sheet Metal Manual". Sheet metal items shall be built into roofing in strict accordance with the instructions of the roofing manufacturer.

D. Perimeter flashing related to roof systems shall be installed in accordance with FM 1-49 requirements.

3.02 INSTALLATION

A. Separate dissimilar metals from substrates and from each other by painting each metal surface in the area of contact with a 15 mil thick application of bituminous coating, as recommended by the manufacturers of the dissimilar metals. Comply with

manufacturer's recommendations for other forms of protection of the stainless steel and aluminum against corrosion.

B. Provide thermal expansion for running trim, flashing and other items exposed for more than 15 feet - 0 inches continuous length. Maintain a watertight installation at expansion seams. Locate expansion seams at 15 feet - 0 inches intervals, and 2 feet 0 inch each side of corners and intersections.

C. Fabricate and install the work with lines and corners of exposed units true and accurate. Form exposed faces flat and free of buckles, excessive waves, and avoidable tool marks, considering the temper and reflectivity of the metal. Provide uniform, neat double locked seams with cleats rolled into the seam and with minimum exposure of solder, welds, and sealant. Except as otherwise shown, fold back the sheet metal to form a hem on the concealed side of exposed edges. All exposed edges of all sheet metal flashing shall be hemmed not less than 1/2-inch wide.

D. Conceal fasteners and expansion provisions wherever possible in exposed work, and locate so as to minimize the possibility of leakage. Cover and seal work as required for a watertight installation.

E. Provide cleat type anchorages for metal flashings and trim wherever practical, arranged to relieve stresses from building movement, and thermal expansion and contraction.

F. On vertical surfaces lap 2 piece flashings a minimum of 4 inches.

G. On sloping surfaces, for slopes of not less than 6 inches in 12 inches, lap unsealed flashings a minimum of 6 inches. For slopes less than 6 inches in 12 inches, use soldered flat-locked seams.

H. For embedment of metal flashing flanges in single ply roofing or flashing or stripping, extend flanges for a minimum of 6 inches embedment.

I. Flashing to be inserted into reglets shall be installed to the full depth of the reglet with the top flange of the flashing edge turned forward to form a hook. Caulk flashing into reglets using stainless steel wedges. Fill reglet with sealant specified in Section 07 90 00 - Joint Fillers, Sealant and Caulking.

3.03 FIELD TESTING / QUALITY CONTROL

A. Field Quality Control for Cavity Wall Flashing

1. Field test metal cavity wall flashing after installation. After building three courses of concrete unit masonry above area of cavity wall flashing, tape weep vents closed and fill cavity with water.

2. Water leaking from the wall below the area of the metal cavity wall flashing shall be evidence that the metal cavity wall flashing was improperly installed.

3. Remove concrete unit masonry and improperly installed cavity wall flashing and install new cavity wall flashing. Repeat this process until the wall does not shown evidence of leakage beneath cavity wall flashing. All such remedial work shall be at no additional expense to Owner.

4. Remove tape from weep vents and all mortar and other debris from cavity and demonstrate free flow of water from the cavity at conclusion of test.

3.04 ADJUSTING / PROTECTION / CLEANUP

A. Provide continuous protection of metal flashing and trim materials against wetting, contamination, and other damage primarily by storing materials under cover and above ground and away from all construction traffic.

B. Do not permit workmen, or others, to step directly on flashing sheets in place, or to place or move equipment over flashing and trim surfaces. Protect surfaces during installation of permanent covering work and adjoining work.

C. Coordinate metal wall flashings with other Work to ensure secure anchorage and watertight seals, and to minimize exposure to puncture or other damage from the Work of other trades.

D. Neutralize excess flux as work progresses with five percent to ten percent washing soda solution and rinse thoroughly.

E. Clean exposed surfaces of every substance which is visible or might cause corrosion or prevent uniform oxidation of the metal surfaces. Exercise extreme care to remove fluxes and ferrous metal particles, including welding splatter and grinding dust.

F. Do not leave metal debris and discarded materials at the Site of the Work. Clean each site of the work as the work progresses on a daily basis.

END OF SECTION

ATTACHMENT L – 07 90 00 JOINT FILLERS, SEALANTS AND CAULKING

SECTION 07 90 00
JOINT FILLERS, SEALANTS AND CAULKING[1]

PART 1 – GENERAL

1.01 NOT USED

1.02 SECTION INCLUDES

A. Furnish labor, materials, equipment and appliances required for the complete execution of Work shown on the Drawings and specified herein.

1.03 RELATED WORK SPECIFIED ELSEWHERE

A. Section 03 15 00 – Concrete Accessories

B. Section 03 15 16 – Joints in Concrete

C. Section 04 22 23.23 – Prefaced Concrete Unit Masonry

D. Section 04 43 00 – Stone Masonry

E. Section 05 40 00 – Cold-Formed Metal Framing

F. Section 08 11 13 - Steel Doors and Frames

G. Section 08 15 00 – Fiberglass Doors and Frames

H. Section 08 41 00 – Aluminum-Framed Entrances and Storefront

I. Section 08 44 13 – Glazed Aluminum Curtain Wall System

J. Section 08 45 23 – Translucent Wall Assemblies

K. Section 08 80 00 – Glass and Glazing

L. Section 08 91 20 - Fixed Louvers

1.04 REFERENCE SPECIFICATIONS, CODES AND STANDARDS

A. Without limiting the generality of the other requirements of the specifications, all work herein shall conform to the applicable requirements of the following documents. All

---

1 Addendum No.5

referenced specifications, codes, and standards refer to the most current issue available at the time of Bid.

1. MSBC – Massachusetts State Building Code

2. MECC – Massachusetts State Energy Code

3. ASTM C510 - Test for Staining and Color Change of Single or Multi component Joint Sealers.

4. ASTM C661 - Test for Indentation Hardness of Elastomeric Type Sealants by Means of a Durometer.

5. ASTM C793 - Test for Effects of Accelerated Weathering on Elasto¬meric Joint Sealants.

6. ASTM C794 - Test for Adhesionin Peel of Elastomeric Joints Sealants

7. ASTM C920 – Elastomeric Joint Sealants

8. ASTM D1056 – Flexible Cellular Materials – Sponge or Expanded Rubber

9. Federal Specifications, TT S 00227 - Sealing Compound: Elastomeric Type, Multi component for Caulking, Sealing, and Glazing in Buildings and Other Structures

10. SWRI – Sealant and Caulking Guide Specification

11. MassDEP – Massachusetts Department of Environmental Protection[3]

12. 310 CMR 7.0 – Code of Massachusetts Regulations Air Pollution Control3

13. VOC – Volatile Organic Compound3

14. OTC – Ozone Transport Commission3

1.05 SUBMITTALS

A. In accordance with the procedures and requirements set forth in Section 01 33 00 – Submittal Procedures, submit the following:

1. Manufacturers specifications and installation instructions for each type of sealant, caulking compound and associated miscellaneous material required. Label each product submitted with Type as indicated in paragraph 2.01 A.

---

3 Addendum No.3

2. Actual cured material samples of each type of caulking and sealant specified, 4 inches long, in each of the manufacturer's standard colors. Samples will be reviewed by Engineer for color and texture only. Compliance with other requirements is the responsibility of Contractor.

3. Compatibility tests for substrates, based on adhesion in peel standard test procedures and FS TT S 0027.

4. Copies of certified laboratory test reports indicating conformance with the requirements specified.

5. Provide materials in accordance with local, state, and federal regulations. Where materials listed do not comply, substitute equal products with VOC limits which comply with local, state, and federal regulations indicate such upon submittal and provide at no additional cost to Owner.3

1.06 QUALITY ASSURANCE

A. Applicator shall be a company specializing in the installation of sealants with a minimum of five years of experience.

B. Source Quality Control:

1. Engage a single manufacturer who shall provide the services of a Technical Representative who shall assist Contractor and Engineer by providing technical opinions on the adequacy of materials and methods of installation based on Working Drawings approved by Engineer.

2. Provide such services during the time of delivery, storage, handling and installation of all caulking and sealant system components.

3. Test caulking and sealants for compatibility with the substrates specified for conformance to FS TT S 0027, and recommend remedial procedures as required.

C. Installer Qualifications: Engage a single installer skilled, trained and with successful experience in the application of the types of material required and who agrees to employ only tradesmen with specific skill and successful experience in this type of work.[4]

D. Performance Criteria: Do not provide exposed caulking and sealant work for metal batten roofing, sheet metal flashing and trim or custom preformed metal siding work in order to render the work watertight. These construction systems shall be detailed, fabricated and provided such that they are inherently watertight without the use of additional caulking, sealant, elastomeric compounds, asphaltic compounds or other similar materials.4

010219

4 Addendum No.2

E. Compatibility: Before purchase of each specified sealant, investigate its compatibility with the joint surfaces, joint fillers and other materials in the joint system. Provide only materials (manufacturer's recommended variation of the specified materials) which are known to be fully compatible with the actual installation condition, as shown by manufacturer's published data or certification.

F. Work of this section is subject to the air barrier system testing in accordance with Section 01 91 00 – Building Systems Commissioning.4

1.07 DELIVERY, STORAGE AND HANDLING

A. Deliver materials in caulking and sealant manufacturer's original unopened and undamaged containers, with information accurately representing container contents as approved by Engineer at time of Working Drawing and Samples submissions.

B. Include the following information on the label:

1. Name of material and supplier.

2. Formula or specification number, lot number, color and date of manufacturer.3

3. Mixing instructions, shelf life and curing time when applicable.

4. Failure to comply with these requirements shall be sufficient cause for rejection of the material in question, by Engineer, and his requiring its removal from the site. Supply new material conforming to the specified requirements at no additional expense to the Owner.

C. Store materials in location protected from freezing or damages.

D. Do not use materials which are outdated as indicated by shelf life.

E. Reject and remove from the site materials within broken or damaged packaging.

F. Do not open containers or mix components until necessary preparatory work and priming has been completed.

G. Handle materials carefully to prevent inclusion of foreign materials.

PART 2 – PRODUCTS

2.01 MATERIALS

A. Sealants

1. Type 1: Multi-component, non-sag, low-modulus polyurethane rubber sealant meeting ASTM C-920, Type M, Grade NS, Class 25, use NT, M, A, and O. Capable of withstanding 50% in extension or compression such as Sikaflex-2C NS/SL, Sika Corporation, or Sonolastic NP-2, Sonneborn, or DynaTrol II by Pecora Corporation.

2. Type 2: Single component polyurethane sealant meeting ASTM C-920, Type S, Grade NS, Class 25, Use NT, M, A, and O. Capable of withstanding 25% in extension or compression such as Sikaflex 1A by Sika Corporation, DynaTrol 1-XL by Pecora Corporation, or Sonolastic NP-1 by Master Builders Solutions.

3. Type 3: Single component, low-modulus moisture curing silicone meeting ASTM C-920, Type S, Grade NS, Class 25, Use NT, M, G, and A. Capable of withstanding 50% extension and compression. Pecora 890 by Pecora Corporation, Sonolastic Omni Seal by Master Builders Solutions.

4. Type 4: Single component, mildew resistant, moisture-curing silicone meeting ASTM C-920, Type S, Grade NS, Class 25, Use NT, M, G, and A. Pecora 898 by Pecora Corporation, Sonolastic Omni Plus by Master Builders Solutions.

5. Type 5: Single component, acrylic latex meeting ASTM C-834. AC-20+ Silicone by Pecora Corporation, Sonneborn Sonolac by Master Builders Solutions.

6. Type 6: High grade butyl sealant meeting Federal Specification TT-S-00-1657. BC-158 by Pecora Corporation or equal.

7. Type 7: Multi-component chemical resistant polysulfide sealant conforming to ASTM C-920, Type M, Grade NS, Class 25 such as Deck-O-Seal by W.R. Meadows, Tammsflex by DuraJoint Concrete Accessories, or Synthacalk GC2+ by Pecora Corporation.

8. Type 8: Nonsag, Multi Component, traffic grade polyurethane sealant meeting ASTM C920, Type M, Grade NS, Class 25, use T, M, A, and O. DynaTread by Pecora Corporation, MasterSeal CR 195 by Master Builders Solutions.

B. Primer: Non-staining primer recommended by sealant manufacturer for the substrates on this project.

C. Backer Rod: Closed cell foam, nonreactive with caulking materials, non-oily, and approved by the sealant manufacturer. Minimum density shall be 2.00 pounds per cubic foot. Use no asphalt or bitumen-impregnated fiber with sealants.

D. Sill Sealer: Ribbed, closed-cell, polyethylene foam meeting ASTM D3575, such as ProPink ComfortSeal by Owens Corning, Styrofoam Brand Sill Seal by Dupont, Reflectix, Inc. or approved equal.

E. Joint Cleaner: Recommended by sealant or caulking compound manufacturer.

F. Bond breaker: Either polyethylene film or plastic tape as recommended by the sealant manufacturer.

G. Color: Where manufacturer's standard colors do not closely match materials being sealed, provide a custom color.

H. Entry Panels, with 4" (102 mm), 5" (127 mm), 6" (152 mm) diameter ports for all interior and exterior wall installations. The aluminum panels shall be powder coated in a color as selected by the Engineer (minimum 12 colors) and furnished with Sealing Caps and installation hardware, including #14 stainless steel screws, finishing washers, and plastic anchors. Acceptable manufacturers shall be as listed below:

1. Valmont Industries, Microflect, Phone 1-888-880-9191

2. Or approved equal

PART 3 – EXECUTION

3.01 QUALITY CONTROL

A. Coordinate work with details shown on approved shop drawings prepared by other trades.

B. Verify conditions in the field.

C. Schedule work to follow closely the installation of other trades.

D. Apply sealants and related items in temperatures and dry conditions recommended by the manufacturers.

E. Do not paint sealant, unless recommended by sealant and paint manufacturer.

3.02 PREPARATION

A. Protect finished surfaces adjoining by using masking tape or other suitable materials.

B. Clean and prime joints before starting any caulking or sealing work.

C. Thoroughly clean joints and spaces of mortar and other foreign materials. Cleaning agent shall be Xylol or similar non-contaminating solvent to remove any film from metal surfaces. Masonry or concrete surfaces shall be brushed or air jet cleaned.

D. Joint Requirements

1. All joints and spaces to be sealed in exterior work shall be less than ½-inch deep and not less than 1/4 inch wide. If joints in masonry are less than that specified herein, the mortar shall be cut out to the required width and depth. All joints and

spaces to receive sealant shall be completely prepared and thoroughly dry before installation of sealant.

2. Unless otherwise specified, joints and spaces which are open to a depth of 1/2 inch or greater shall be solidly filled with back-up material to within 1/4 inch of the surface. Back-up material shall be packed tightly and made continuous throughout the length of the joints. Bond breaker shall be applied as required. If joints are less than ¼-inch deep, the back-up material may be omitted, a bond breaker substituted and the joint completely filled with sealant. The back-up material shall not project beyond the ¼-inch depth of the open space in any joint. The following width-to-depth ratio table shall be adhered to, unless otherwise recommended by manufacturer.

	Sealant Depth	
Joint Width	**Minimum**	**Maximum**
¼ inch	1/4 inch	1/4 inch
Over 1/4 inch to 1/2 inch	1/4 inch	Equal to width
Over 1/2 inch to 1 inch	1/2 inch	Equal to width
Over 1 inch to 2 inches	1/2 inch	1/2 of width

3.03 APPLICATION

A. Exercise care before, during, and after installation so as not to damage any material by tearing or puncturing. All finished work shall be approved before covering with any other material or construction.

B. Apply sealant by an approved type of gun except where the use of a gun is not practicable, suitable hand tools shall be used. Avoid applying the compound to any surface outside of the joints or spaces to be sealed. Mask areas where required to prevent overlapping of sealant.

C. All joints shall be waterproof and weathertight.

D. Point sealed joints to make a slightly concave joint, the edges of which are flush with the surrounding surfaces. Exposed joints in the interior side of the door and other frames shall be neatly pointed flush or to match adjacent jointing work.

E. Adjacent materials which have been soiled shall be cleaned immediately and the work left in neat and clean condition.

F. Comply with sealant manufacturer's written instructions except where more stringent requirements are shown or specified and except where manufacturer's technical representative directs otherwise.

3.04 ADJUSTMENT AND CLEANING

A. Remove misplaced sealant compounds promptly using methods and materials recommended by the manufacturer, as the work progresses.

B. Allow sealants to cure and remove protective edging, of doors, louvers, saddles windows etc. as directed by the Engineer.

3.05 SCHEDULE

Schedule of Sealants

Application	Sealant	Color
Vertical and horizontal expansion and construction joints in concrete structures unless noted otherwise herein or on Drawings.	Type 1	To closely match adjacent surfaces or mortar and as selected by the Owner.
Vertical and horizontal joints bordered on both sides by masonry, precast concrete, natural stone or other porous building material, unless noted otherwise herein or on Drawings.	Type 2	To closely match adjacent surfaces or mortar and as selected by the Owner.
Vertical and horizontal joints bordered on both sides by painted metals, anodized aluminum, mill finished aluminum, PVC, glass or other non-porous building material.	Type 3	To closely match adjacent surfaces and as selected by the Owner.
Masonry expansion and control joints less than 1¼" wide.	Type 2	To closely match adjacent surfaces and as selected by the Owner.
Masonry expansion and control joints equal or greater than 1¼ inches wide and not to exceed 2”.	Type 1	To closely match adjacent surfaces and as selected by the Owner.
Interior – wood trim and finish joints.	Type 5	Color to be selected by Owner
Sanitary areas, joints in ceramic tile, around plumbing fixtures, countertops, and back splashes.[1]	Type 4	To closely match adjacent surfaces and as selected by the Owner.
Perimeter sealing of doors, windows, louvers, piping, ducts, and electrical conduit.[2]	Type 2 OR Type 3	To closely match adjacent surfaces and as selected by the Owner.
Below thresholds.	Type 6	Manufacturer's standard
Submerged in liquids.[3,4]	Type 1	Manufacturer's standard
Submerged in liquids with high concentration of chlorine (> 2 ppm).	Type 7	Manufacturer’s standard
Horizontal Joints exposed to vehicular or pedestrian traffic.	Type 8	To closely match adjacent surfaces.
Other joints indicated on the drawings or customarily sealed but not listed.	Type recommended by manufacturer	To closely match adjacent surfaces and as selected by the Owner.

[1] Sealant for Laboratory Countertop shall be as recommended by countertop manufacturer.
[2] Provide UL approved sealants for penetrations thru fire-rated walls and as specified in Section 07 84 00 - Firestopping.
[3] Sealants which will come in contact with potable water shall meet the requirements of NSF 61.
[4] Where sealant will be immersed in liquid chemicals verify compatibility prior to installation of sealant.

END OF SECTION

ATTACHMENT M – 07 95 00 EXPANSION JOINT SYSTEM

SECTION 07 95 00

EXPANSION JOINT SYSTEM[1]

PART 1 – GENERAL

1.01 NOT USED

1.02 SECTION INCLUDES

A. The work shall consist of furnishing and installing waterproof expansion joints in accordance with the details shown on the plans and the requirements of the specifications. Preformed seal shall be silicone pre-coated, preformed, pre-compressed, self-expanding, sealant and covers system.

B. This Section includes the following:

1. Floor expansion joint assemblies.
2. Wall/ceiling expansion joint assemblies.
3. Exterior expansion joint seals (above grade).

C. RELATED WORK SPECIFIED ELSEWHERE

1. Section 03 15 16 - Joints In Concrete
2. Section 05 50 00 - Metal Fabrications.
3. Section 07 52 00 - Built-Up Bituminous Roofing
4. Section 07 90 00 - Joint Fillers, Sealants and Caulking

1.03 REFERENCE SPECIFICATIONS, CODES AND STANDARDS

A. Without limiting the generality of the Specifications, the Work shall conform to the applicable requirements of the following documents:

1. ASTM B 209 - Specification for Aluminum and Aluminum-Alloy Sheet and Plate

[1] Addendum No.5

2. ASTM C719 - Adhesion and Cohesion of Elastomeric Joint Sealants, Standard Test Method for

3. ASTM C920 - Elastomeric Joint Sealants

4. ASTM C1135 - Determining Tensile Adhesion Properties of Structural Sealants, Standard Test Method for

5. ASTM C1135 - Determining Tensile Adhesion Properties of Structural Sealants, Standard Test Method for

6. ASTM D2000 - Standard Classification System For Rubber Products In Automotive Applications

7. ASTM B221 - Specification For Aluminum And Aluminum-Alloy Extruded Bars, Rods, Wire, Profiles, And Tubes

8. ASTM E814 - Fire Tests of Penetration Fire Stop Systems, Standard Test Method for

9. ASTM E1966 - Method for Fire-Resistive Joint Systems

10. National Association of Architectural Metal Manufacturers (NAAMM) - Metal Finishes Manual

11. UL 2079 - Tests for Fire Resistance of Building Joint Systems

1.04 SUBMITTALS

A. Shop Drawings: Provide the following for each joint system specified and obtain approval prior to fabrication and shipment of materials to the job site:

1. Placement Drawings: Include line diagrams showing plans, elevations, sections, details, splices, blockout requirement, entire route of each joint system, and attachments to other work. Where joint systems change planes, provide isometric or clearly detailed drawing depicting how components interconnect.

B. Product Data: Submit copies of manufacturer’s latest published literature for materials specified herein for approval, and obtain approval before materials are fabricated and delivered to the site. Data to clearly indicate movement capability of cover assemblies and suitability of material used in exterior seal for UV exposure.

C. Samples for Initial Selection: For each type of joint system indicated.

1. Include manufacturer's color charts showing the standard range of colors and finishes available for each exposed metal and elastomeric seal material.

D. Certificates – Material test reports from qualified independent testing laboratory indicating and interpreting test results relative to compliance of fire-rated expansion joint assemblies with requirements indicated.

1.05 PRODUCT DELIVERY, STORAGE AND HANDLING

A. Deliver products to site in Manufacturer's original, intact, labeled containers. Handle and protect as necessary to prevent damage or deterioration during shipment, handling and storage. Store in accordance with manufacturer's installation instructions.

1.06 DEFINITIONS

A. Maximum Joint Width: Widest linear gap a joint system tolerates and in which it performs its designed function without damaging its functional capabilities.

B. Minimum Joint Width: Narrowest linear gap a joint system tolerates and in which it performs its designed function without damaging its functional capabilities.

C. Movement Capability: Value obtained from the difference between widest and narrowest widths of a joint.

D. Nominal Joint Width: The width of the linear opening specified in practice and in which the joint system is installed.

1.07 QUALITY ASSURANCE

A. Installer Qualifications: Approved by manufacturer.

B. Source Limitations: Obtain all architectural joint systems through one source from a single manufacturer.

C. Product Options: Drawings indicate size, profiles, and dimensional requirements of architectural joint systems and are based on the specific systems indicated. Refer to Division 01 Section "Product Requirements."

1. Do not modify intended aesthetic effects, as judged solely by Architect, except with Architect's approval. If modifications are proposed, submit comprehensive explanatory data to Architect for review.

D. Loading Characteristics: Provide standard loading covers that are capable of withstanding up to 500 lb. point loads at floors.

E. Fire-Test-Response Characteristics: Where indicated, provide architectural joint system and fire-barrier assemblies identical to those of assemblies tested for fire resistance per UL 2079, ASTM E814 and/or ASTM E 1966 by a testing and inspecting agency acceptable to authorities having jurisdiction. Fire rating not less than the rating of adjacent construction.

F. Manufacturer to provide 5 year warranty for all joint covers.

G. Work of this section is subject to the air barrier system testing in accordance with Section 01 91 00 – Building Systems Commissioning.[3]

1.08 COORDINATION

A. Coordinate installation of exterior wall expansion joint systems with work of Section 07 52 00 -Built-Up Bituminous Roofing to ensure that wall transitions are watertight.

PART 2 – PRODUCTS

2.01 MANUFACTURERS

A. Expansion joint cover assemblies shall be manufactured by:

1. Basis of Design: EMSEAL Joint Systems LTD., 25 Bridle Lane, Westborough, MA.
2. Nystrom, 9300 73rd Avenue North, Minneapolis, MN.
3. MM Systems, 50 MM Way - PO Box 98 - Pendergrass, GA.

2.02 MATERIALS

A. Seismic Joint Seals, Assemblies

1. Exterior:

a. Vertical: Exterior surfaces (above grade) in coordination with work of Section 07 52 00 - Built-Up Bituminous Roofing including but not limited to, exposed and concealed spaces at exterior concrete, masonry, metal fascia, and coping surfaces. Emseal Color Seal or approved equal:

1) Silicone face seal and back seal. Face seal color as selected by the Engineer.

[3] Addendum No.2

2) Single grooved rib at face seal to be center of joint.

3) Shall be continuous and shall be secured and set in a continuous seal or tape as recommended by the manufacturer and approved by the Engineer.

4) Provide manufacturer's prefabricated retainer bracket/metal angle assembly at areas as indicated on the Contract Drawings. Metal angle shall be type 316 stainless steel if concealed or if exposed then aluminum factory primed, and kynar coated and come prefinished in custom color ready to install at Site.

b. Horizontal: Concrete foundation and wall and slab surfaces. Emseal DSM-DS Deck Joint or approved equal.

1) All exterior concrete slab seal assemblies shall be traffic-grade joint.

2) Color as selected by Engineer.

c. All exterior assemblies shall be compatible to permit continuity of exterior system components without adversely affecting required fire ratings, water tightness or weather tightness of the seals, including but not limited to, transitions from walls to floor slabs and walls to roofs. Color as selected by Engineer.

d. All roof expansion joints to be installed as work of Section 07 52 00 - Built-Up Bituminous Roofing in accordance with manufacture’s requirements.

2. Interior:

a. Vertical: Masonry or concrete wall and column surfaces. Emseal Color Seal or approved equal:

1) Silicone face seal with continuous groove at center at joint.

2) Color: As selected by Engineer.

b. Horizontal: Ceilings including suspended ceiling. Emseal Color Seal or approved equal:

1) Silicone face seal with continuous groove at center of joint.

2) Color as selected by Engineer.

c. Horizontal: Floor surfaces. Emseal DSM-DS Deck Joint or approved equal.

1) All floor seal assemblies shall be traffic-grade joint.

3. Chemical-Resistant:

   a. Vertical and Horizontal: Masonry or concrete wall and column surfaces in Chemical Storage Areas. Emseal Chemseal or approved equal:

      1) Chemical resistant silicone face seal with continuous groove at center at joint.

      2) NSF compliant.

      3) Color: As selected by Engineer.

B. Aluminum: ASTM B221, Alloy 6005A-T61, 6063-T5, 6061-T5, 6105-T5 for extrusions; ASTM B 209, Alloy 6061-T6, 3003-H14, 5005-H34 for sheet and plate.

   1. Class II, Clear Anodic Finish: AA-M12C22A31 (Mechanical Finish: nonspecular as fabricated; Chemical Finish: etched, medium matte; Anodic Coating: Architectural Class II, clear coating 0.010 mm or thicker) complying with AAMA 611.

C. Extruded Preformed Seals: Single or multilayered rubber extrusions as classified under ASTM D2000, designed with or without continuous, longitudinal, internal baffles and formed to fit compatible frames, in color indicated, or, if not indicated, as selected by the Engineer from manufacturer's standard colors.

D. Elastomeric Sealant: Manufacturer's standard elastomeric sealant complying with ASTM C920, use T, factory-formed and bonded to metal frames or anchor members; in color indicated, as selected by the Engineer from manufacturer's custom color to match adjoining surfaces.

   1. Abrasion resistance: Maximum 1 percent weight loss, tested to ASTM D4060.

   2. Fuel resistance: Pass ASTM C719 and ASTM C1135.

E. Exterior Seals: Typically two single layered flexible extrusions, interior or and polymer based seal, as classified under ASTM D2000, retained in a set of compatible frames, in color indicated, or, if not indicated, as selected by the Engineer from manufacturer's standard colors.

F. Adhesive: Epoxy type, furnished by joint seal manufacturer.

G. Accessories: Manufacturer's standard anchors, fasteners, set screws, spacers, flexible vapor seals and filler materials, drain tubes, adhesive and other accessories compatible with material in contact, as indicated or required for complete installations.

H. Expansion joint sealants shall conform to the applicable requirements of 07 90 00 – Joint Fillers, Sealants and Caulking.

I. Coordinate work adjoining concrete with Section 03 15 16 - Joints in Concrete and structural drawing details.

J. Location of joints in cover system assemblies shall be subject to the Engineer's approval.

K. Anchoring sleeves shall be subject to the Engineer's approval. The use of plastic anchor sleeves shall be prohibited.

L. Fire Barriers: Any material or material combination, when fire tested after cycling, designated to resist the passage of flame and hot gases through a movement joint and to meet performance criteria for required rating period.

M. Moisture Barrier: 7-ply laminate reinforced Polyethylene or approved equal.

2.03 GENERAL FABRICATION

A. General: Provide expansion joint systems of design, basic profile, materials, and operation indicated. Provide units with capability to accommodate variations in adjacent surfaces.

B. Fabrication:

1. Provide expansion joint cover assemblies of design, basic profile, materials, and operation indicated. Select units comparable to those indicated or required to accommodate joint size, variations in adjacent surfaces, and structural movement. Furnish units in longest practicable lengths to minimize number of end joints. Provide hairline mitered corners where joint changes directions or abuts other materials. Include closure materials and transition pieces, tee-joints, corner, curbs, cross-connections, and other accessories as required to provide continuous joint cover assemblies.

2. Fabrications shall be custom fabricated as required to suit installation requirements and shall conform to the requirements of Section 05 50 00 - Metal Fabrications.

A. Metal Finishes

1. Comply with NAAMM, Metal Finishes Manual for finish designations and application recommendations, except as otherwise indicated. Apply finishes in factory after products are fabricated. Protect finishes on exposed surfaces with protective covering before shipment.

2. Aluminum Finish:

   a. Clear Anodized Finish - AA-C22A41; medium matte etches finish with 0.7 mil. Minimum thick anodic coating.

   b. Factory-Primed Concealed Surfaces - Protect concealed metal surfaces that will be in contact with concrete and masonry surfaces when installed by applying a shop coat of manufacturer's standard primer to contact surfaces. Provide minimum dry film thickness of 20 mils.

B. Dissimilar Materials

1. Protect dissimilar materials from deleterious interaction by coating with an asphaltic or other approved coating as recommended by the manufacturer.

2.04 EXAMINATION /PREPRATION

A. Examine surfaces and blockouts where architectural joint systems will be installed for installation tolerances and other conditions affecting performance of work.

1. Proceed with installation only after unsatisfactory conditions have been corrected.

2. Where necessary, check actual locations of walls and other construction to which Work must fit, to determine accurate field measurements before fabrication. Show recorded measurements on final Shop Drawings and coordinate fabrication schedule with construction progress to avoid delay of Work.

3. The Contractor shall make a thorough examination of all surfaces receiving the Work of this Section and before starting the installation, notify the Engineer, in writing, of any defect which would affect the satisfactory completion of the Work of this Section.

B. Preparation

1. The Contractor shall examine the Contract Drawings and Specifications in order to ensure the completeness of the Work required under this Section.

2. The Contractor shall verify all measurements and dimensions at the Site and cooperate in the coordination and scheduling of the Work of this Section with the

Work of related trades, with particular attention given to the installation of items embedded in concrete and masonry so as not to delay project progress.

3. The Contractor shall provide all templates as required to related trade for location of all support and anchorage items.

4. Prepare substrates according to architectural joint system manufacturer's written instructions.

5. Repair concrete slabs and blockouts using manufacturer's recommended repair grout of compressive strength adequate for anticipated structural loadings.

C. Coordinate and furnish anchorages, setting drawings, and instructions for installing joint systems. Provide fasteners of metal, type, and size to suit type of construction indicated and to provide for secure attachment of joint systems.

D. Cast-In Frames: Coordinate and furnish frames to be cast into concrete.

2.05 INSTALLATION

A. In addition to requirements of these Specifications, the Contractor shall comply with manufacturer's instructions and recommendations as approved by the Engineer for all phases of Work, including preparation of substrate, applying materials, and protection of installed units.

B. Provide anchorage devices and fasteners where necessary for securing expansion joint cover assemblies to in-place construction, including threaded fasteners with drilled-in-fasteners for masonry and concrete where anchoring members are not embedded in concrete. Provide fasteners of metal, type, and size to suit type of construction indicated and provide for secure attachment of expansion joint cover assemblies.

C. Perform all cutting, drilling, and fitting required for installation of expansion joint covers. Install joint cover assemblies in true alignment and proper relationship to expansion joints and adjoining finished surfaces measured from established lines and levels.

D. Allow adequate free movement for thermal expansion and contraction of metal to avoid buckling.

E. Set floor covers at elevations to be flush with adjacent finished floor materials. If necessary, shim to level, but ensure base frames have continual support to prevent rocking and vertical deflection.

F. Locate wall, ceiling, and soffit covers in continuous contact with adjacent surfaces. Securely attach in place with all required accessories.

G. Locate anchors at interval recommended by manufacturer, but not less than 3 inches from each end and not more than 24 inches on centers.

H. Maintain continuity of expansion joint cover assemblies with end joints held to a minimum and metal members aligned mechanically using splice joints. Cut and fit ends to produce joints that will accommodate thermal expansion and contraction of metal to avoid buckling of frames.

I. Adhere flexible filler materials (if any) to frames with adhesive or pressure-sensitive tape as recommended by manufacturer.

1. Installation of Extruded Preformed Seals - Install scales to comply with manufacturer's instruction and with minimum number of end joints.

2. For straight sections provide preformed scales in continuous lengths.

3. Vulcanize or heat-seal all field splice joints in preformed seal material to provide watertight joints using manufacturer's recommended procedure.

4. Apply manufacturer's approved adhesive, epoxy, or lubricant-adhesive to both frame interfaces prior to installing performed seal.

5. Seal transitions in accordance with manufacturer's instruction.

J. Installation of Elastomeric Sealant Joint Assemblies:

1. Seal all end joints within continuous runs and joints at transitions in accordance with manufacturer's directions to provide a watertight installation.

2. Install exterior flexible seal in standard lengths.

3. Seal transitions and butt joints in accordance with manufacturer's instructions.

K. Installation of Seismic Seals:

1. Install secondary seals in continuous lengths; vulcanize all filed splice joints in secondary seal material to provide watertight joints using manufacturer's recommended procedures.

2. Install primary flexible seals in standard lengths.

3. Seal transitions and butt joints in accordance with manufacturer's instructions.

L. Installation of Fire Barrier:

1. Install fire barrier in accordance with the Massachusetts Building Code and local authorities having jurisdiction, as well as UL requirements and using manufacturer's recommended procedures.

2. Install transition and end joints to provide continuous fire resistance and in accordance with manufacturer's instructions.

3. Provide continuity of fire rated construction at all joint system assemblies where adjacent construction requires by code or is provided with a fire rating. Such wall assemblies when penetrated by expansion joint systems, the fire rating shall be not less than the rating of the fire rated wall, floor or roof construction.

M. Water Barrier: Provide water barrier at exterior joints and where called for on Drawings. Provide drainage fittings where indicated.

2.06 PROTECTION

A. Do not remove protective covering until finish work in adjacent areas is complete. When protective covering is removed, clean exposed metal surfaces to comply with manufacturer's written instructions.

B. Protect the installation from damage by work of other Sections. Where necessary due to heavy construction traffic, remove and properly store cover plates or seals and install temporary protection over joints. Reinstall cover plates or seals prior to Substantial Completion of the Work.

END OF SECTION

no text on this page

ATTACHMENT N – 08 44 13 GLAZED ALUMINUM CURTAIN WALL SYSTEM

DIVISION 08

METAL WINDOWS

(FILED SUB BID REQUIRED)

SECTION 08 44 13

GLAZED ALUMINUM CURTAIN WALL SYSTEM[1]

PART 1 – GENERAL

1.01 FILED SUB-BID REQUIREMENTS

A. This Section is part of the filed sub-bid for Division 08 – METAL WINDOWS. See Division 08 Openings.

1.02 SUMMARY

A. This Section describes the general requirements for a complete, custom aluminum curtain wall system with concealed connectors. The custom die-formed, extruded aluminum curtain wall system shall be provided with fully thermally isolated indoor and outdoor components with 'rain screen' pressure equalization chambers, and shall be capable of structurally spanning vertically between support locations shown while maintaining sight lines established on the Contract Drawings. The complete system shall also include concealed connectors and all custom and standard flashings, accessories and miscellaneous components recommended by the curtain wall system manufacturer specified for a complete water- and weathertight permanent installation complying with all governing codes and the requirements of this Section whether or not shown.

B. The complete glazed aluminum curtain wall system shall also include all fasteners, trim, dry-seal joint gaskets, pressure plates, closure plates, custom snap covers, anchors, inserts, support brackets, expansion devices, weeps, custom and flashing, fascias, and all other custom components as necessary to complete the Work.

C. METAL WINDOWS SUBCONTRACTOR shall supply a job mock-up before proceeding with the Work and all labor, materials, equipment and incidentals as shown, specified and required to furnish, install and place into satisfactory service all components of the curtain wall system Work.

---

[1] Addendum No. 5

1.03 RELATED SECTIONS

A. Section 07 26 13 - Above-Grade Vapor Retarders

B. Section 07 60 00 - Flashing and Sheet Metal

C. Section 07 90 00 - Joint Fillers, Sealants and Caulking

D. Section 08 41 13 - Aluminum-Framed Entrances and Storefront

E. Section 08 71 01 - Finish Door Hardware

F. Section 08 81 03 - Glass, Plastic and Glazing

1.04 REFERENCES

A. MSBC - Massachusetts State Building Code

B. ASTM A123 - Zinc (Hot-Dip Galvanized) Coatings on Iron and Steel Products, Standard Specification for

C. ASTM B209 - Aluminum and Aluminum-Alloy Sheet and Plate, Standard Specification for

D. ASTM B221 - Aluminum and Aluminum-Alloy Extruded Bars, Rods, Wire, Profiles, and Tubes, Standard Specification for

E. ASTM B 429 - Aluminum-Alloy Extruded Structural Pipe and Tube, Standard Specification for

F. ASTM C542 - Lock-Strip Gaskets, Standard Specification for

G. ASTM D395 - Rubber Property-Compression Set, Standard Test Methods for

H. ASTM D412 - Vulcanized Rubber and Thermoplastic Rubbers and Thermoplastic Elastomers-Tension, Standard Test Methods for

I. ASTM D573 - Rubber - Deterioration in an Air Oven, Standard Test Method for

J. ASTM D624 - Tear Strength of Conventional Vulcanized Rubber and Thermoplastic Elastomers, Standard Test Method for

K. ASTM D746 - Brittleness Temperature of Plastics and Elastomers by Impact, Standard Test Method for

L. ASTM D1149 - Rubber Deterioration – Cracking in an Ozone Controlled Environment, Standard Test Methods for

M. ASTM D2240 - Rubber Property-Durometer Hardness, Standard Test Method for

N. ASTM E283 - Determining the Rate of Air Leakage Through Exterior Windows, Curtain Walls and Doors Under Specified Pressure Differences Across the Specimen, Standard Test Method for

O. ASTM E330 - Structural Performance of Exterior Windows, Doors, Skylights and by Uniform Static Air Pressure Difference, Standard Test Method for

P. ASTM E331 - Water Penetration of Exterior Windows, Skylights, Doors, and Curtain Walls by Uniform Static Air Pressure Difference, Standard Test Method for

Q. ASTM E699 - Agencies Involved in Testing, Quality Assurance, and Evaluating Building Components , Standard Specification for

R. ASTM E1105 - Field Determination of Water Penetration of Installed Exterior Windows, Skylights, Doors, and Curtain Walls by Uniform or Cyclic Static Air Pressure Difference, Standard Test Method for

S. AAMA 501.1 - Standard Test Method for Exterior Windows, Curtain Walls and Doors for Water Penetration Using Dynamic Pressure

T. AAMA 501.2 - Field Check of Installed Storefronts, Curtain Walls, and Sloped Glazing Systems for Water Leakage

U. AAMA CW-DG-1 - Curtain Wall Design Guide Manual

V. AAMA CWG-1 - Installation of Aluminum Curtain Walls

W. AAMA MCWM-1 - Metal Curtain Wall Manual

X. AAMA TIR-A9 - Metal Curtain Wall Fasteners

Y. Federal Specification FF-S-92 - Screw, Machine: Slotted, Cross-recessed Or Hexagon Head

Z. ASCE 7 - Minimum Design Loads for Buildings and Other Structures

AA. Factory Mutual 1-7 - Wind Forces on Buildings and Other Structures

BB. SSPC Paint 12 - Paint Specification No. 12: Cold-Applied Asphalt Mastic (Extra Thick Film)

CC. AWS D1.2 - Structural Welding Code - Aluminum

DD. AWS D10.7 - Recommended Practices for Gas Shielded-Arc Welding of Aluminum and Aluminum Alloy Pipe

EE. International Building Code (IBC) 2018, Section 1621

FF. II. ASCE 7 – 02 - Section 9.6, Minimum Design Loads for Buildings and Other Structures: Architectural, Mechanical and Electrical Components and Systems.

1.05 QUALITY ASSURANCE

A. Manufacturer/Installer Qualifications:

1. Engage a single firm for both manufacturing and installing the glazed aluminum curtain wall system which can show successful experience in the fabrication and erection of custom curtain wall system Work of scope and type similar to the required Work and who agrees to employ only tradesmen with specific skill and successful experience in this type of Work. Submit names and qualifications to Engineer along with the following information on a minimum of three successful projects:

   a. Names and telephone numbers of owners, architects or engineers responsible for projects.

   b. Approximate contract cost of the curtain wall system.

   c. Amount of area installed.

B. Testing Agency Qualifications: To qualify for approval, an independent testing agency shall demonstrate to Engineer's satisfaction, based on evaluation of criteria submitted by testing agency in conformance with ASTM E 699, that it has the experience and capability to satisfactorily conduct the testing indicated without delaying the Work.

C. Performance Criteria:

1. General:

   a. Standards: Comply with applicable standards, recommendations and specified publications of AAMA, ASCE 7 and FM 1-7 except to the extent more stringent requirements are specified.

   b. Testing: Conduct tests using specimens' representatives of proposed materials and construction including perimeter components according to AAMA 501 recommendations.

c. Modifications: The curtain wall system requirements shown are intended to establish basic dimensions of units, modules, profiles, mullion depths, sight lines, support locations of members and the visual design intention. Within these limitations METAL WINDOWS SUBCONTRACTOR shall be responsible for the structural adequacy, detailing and fabrication of the entire curtain wall system, including anchorage, and to make whatever modifications of, and additions to the details as may be required to fulfill the performance requirements as acceptable to Engineer, at no additional expense to the Owner. Maintain the visual design concept as shown, including member sizes, profiles, support locations and alignment of components.

d. Energy Code Compliance: Whole assembly U-factor performance of U-0.25 or less. Compliance data is subject to the building envelope requirements of Section 01 91 00 – Building Systems Commissioning. [2]

2. Loading Analysis Criteria:

a. Wind Loads: Provide structural analysis, calculations and details indicating compliance with the Massachusetts State Building Code, FM 1-7 (based on full velocity pressure values), Ground Roughness Category B; ASCE 7-93 and ASCE 7-88, based on project location, heights and wind speed (MRI 100 years), Importance Factor Category III Structure, , Exposure C.

b. Seismic Loads: Provide glazed aluminum curtain wall system, including anchorage, capable of withstanding the effects of earthquake motions calculated according to requirements of the Massachusetts State Building Code or ASCE 7, Section 9, whichever are more stringent.

c. Dead Loads: Provide glazed aluminum curtain wall system components that do not deflect an amount which will reduce glazing bite below seventy-five (75) percent of required glazing bite dimension when carrying full dead load. Provide a minimum of one eighth (1/8) inch clearance between members and top of fixed panels, glazing, or other fixed part immediately below. Provide a minimum of one sixteenth (1/16) inch clearance between members and operable windows and doors.

d. Live Loads: Provide glazed aluminum curtain wall system, including anchorage, that accommodates supporting structure's deflection from uniformly distributed and concentrated live loads indicated without failure of materials or permanent deformation.

---

[2] Addendum No.2

e. Provide detailing and fabrication based on the most stringent combination of testing and engineering analysis specified.

f. Provide complete loading analysis performance calculations and Shop Drawings for all curtain wall system components prepared, signed and stamped with the seal of a Licensed Professional Engineer licensed to practice in the State of Massachusetts and recognized as an expert in the specialty involved.

3. Custom die-formed extruded aluminum framing shall incorporate a pressure equalization chamber designed to equalize the pressure behind the clamping bars with the exterior environment. Custom die-formed extruded aluminum framing shall incorporate a continuous air seal at the interior side where the glazing panel is supported by the extruded aluminum frame.

4. Based on recommendations of AAMA MCWM-1 provide curtain wall system and accessory Work that comply with the following minimum performance characteristics, as verified by independent laboratory tests conducted in accordance with the following:

a. Deflection of Framing Members, ASTM E330: Maximum deflection of L/240 at center of single span when subjected to one hundred fifty (150) percent of inward and outward applicable wind load pressures, with no deformation or damage when the load is removed. Provide concealed stiffeners and custom aluminum tube wall thicknesses to prevent greater deflection than specified.

b. Static Test Pressure Water Penetration Testing, ASTM E331: No evidence of uncontrolled water penetration to the interior of the building through the curtain wall work when subjected to a static air pressure difference of ten (10) pounds per square foot.

c. Dynamic Test Pressure Water Penetration Testing, AAMA 501.1: No evidence of uncontrolled water penetration to the interior of the building through the curtain wall work when subjected to a dynamic pressure equal to twenty percent (20%) of inward acting applicable wind load pressure as defined by ASCE 7, but not less than ten (10) pounds per square foot.

d. Air Infiltration Testing, ASTM E283: Maximum air infiltration of 0.06 cubic feet per minute per square foot of curtain wall area, increased by not more than 0.50 cubic feet per minute per linear foot of operable vent crack when subjected to a static air pressure difference of 6.24 pounds per square foot.

5. Thermal Movements: Glazed curtain wall system, including anchorage, shall withstand thermal expansion and contraction movements of system and supporting elements resulting from not less than an ambient temperature change of 120 degrees F, which may cause a surface curtain wall material temperature

change of 180 degrees F. Limit the deflection as for wind pressure loading. Thermal movements shall not cause permanent deformation, cracking, opening of joints, undue stress on fasteners, or other effects detrimental to weathering performance.

6. The design of the glazed curtain wall system, including anchorage, as shown and specified is intended to prevent excessive condensation on the indoor faces of the Work, with the heating and ventilating system in operation, and under the following conditions. Provide curtain wall system detailing and fabrication that achieve and maintain this design intention:

   a. Outdoor: Ambient temperature 0 degree F; 15 mph wind.

   b. Indoor: Ambient temperature of 75 degrees F; relative humidity of twenty-five (25) percent.

   c. Excessive condensation is defined as visible water.

7. Provide internal drainage to lead all infiltrated water to the exterior through weep slots. Provide external drainage to lead all water from curtain wall work to grade.

8. Provide ductile detailing for window frame connections that develop the dynamic flexural capacity of the framing members to mitigate the hazard associated with flying debris. The dynamic flexural capacity is to be determined based on the plastic section modulus of section and dynamic yield strength of the materials. Apply both the dynamic increase factor (DIF) and static increase factor (SIF) in the following table for each respective material to the nominal static yield strengths to calculate the dynamic yield strength:

Material	DIF	SIF
Steel (Fy=36ksi)	1.29	1.1
Steel (Fy>36ksi)	1.19	1.1
6061-T6 Aluminum	1.02	1.14
6063-T6 Aluminum	1.05	1.24

D. Job Mock-Up:

1. Before proceeding with final purchase of materials and fabrication of curtain wall components, prepare a mock-up at the project Site, including all components shown on Shop Drawings approved by Engineer, indicating the final relationship and configurations of the various parts and components and the quality of workmanship which shall be achieved in the Work.

2. Build mock-up full height of opening and one glass lite wide, in a location selected by Engineer, and part of an area to receive the Work of this Section.

3. Include all items that are part of the curtain wall system including anchorages, insulating glass, dry-seal joint system construction.

4. Incorporate materials and methods of fabrication and installation which are identical with project requirements. Install mock-up at locations designated to receive curtain wall system in the finished Work. Accepted job mock-up may be incorporated into the finished Work.

5. Build as many job mock-ups as required to obtain Engineer's acceptance of the Work. Disassemble rejected mock-ups and remove all components from Site. Do not incorporate rejected mock-up components into the Work.

6. Curtain wall work which proceeds without an approved job mock-up shall be stopped, removed without question from METAL WINDOWS SUBCONTRACTOR, and a job mock-up prepared for Engineer’s approval, at no additional expense to OWNER.

1.06 SUBMITTALS

A. METAL WINDOWS SUBCONTRACTOR shall submit samples and Shop Drawings for approval of the Engineer. Submittals shall include, but not be limited to:

1. Samples: Submit for approval the following:

   a. Samples of each type of glazing cap sections of custom die-formed extruded aluminum shapes used in the Work.

   b. Provide cut-a-way samples of vertical to horizontal intersections of each type of curtain wall system component intersection made from 12-inch lengths of full size components and showing the proposed details of joinery, anchorage, movement, glazing, flashing and drainage.

   c. Engineer reserves the right to require samples showing fabrication techniques and workmanship of all component parts, prior to erection of job mock up and the detailing and fabrication of accessories and other exposed auxiliary items for curtain wall system Work, before fabrication proceeds.

   d. One of each type fastener employed, with statement of intended use.

   e. Samples will be reviewed by Engineer for color and texture only. Compliance with other requirements is the exclusive responsibility of METAL WINDOWS SUBCONTRACTOR.

2. Shop Drawings: Submit for approval the following:

   a. Assembly and erection drawings of the entire curtain wall system showing all dimensions, gages, finishes, location of joints, connections, fasteners, expansion provisions, and locations and types of glazing gaskets, pressure

plates and snap covers, internal reinforcement and other related items as required.

b. Provide wall elevations at one half (1/2) inch scale, and full size detail sections of every typical composite member.

c. Coordinate the submittal of Shop Drawings for component parts (as specified in other Sections) with this submittal.

d. Show anchorages and alignments not shown on Shop Drawings of the components.

e. Indicate clearly on Shop Drawings, in a manner highlighted to Engineer, all deviations from Contract Documents.

f. Include calculations of analysis required to show compliance with loading requirements, deflection requirements, and movements in the Work prepared, signed and stamped with the seal of a Licensed Professional Engineer licensed to practice in the State of Massachusetts and recognized as an expert in the specialty involved.

g. Copies of manufacturers' specifications and installation instructions for required materials and components which are not included in the other submittals specified in other Sections of these Specifications. Coordinate the submittal of such other data with this submittal, and with the submittal of samples required by other Sections.

3. Maintenance Manual: Upon completion of the Work, furnish copies of detailed maintenance manual including the following information:

a. Product name and number.

b. Name, address and telephone number of manufacturer and local distributor.

c. Detailed procedures for routine maintenance and cleaning.

d. Detailed procedures for light repairs such as dents, scratches and staining.

4. Test Reports: Submit for approval the following:

a. Certified laboratory test reports for specified performance tests.

5. Certificates: Submit for approval the following:

a. Provide copies of material purchase receipts curtain wall system, signed by a certified and licensed Notary Public, verifying that material purchased for the Work complies with material designations specified as confirmed by Shop Drawings approved by Engineer.

b. Welders certificates indicating that welders comply with requirements specified.

c. Testing Agency Qualifications: Criteria conforming to requirements of ASTM E 699.

6. Guarantee: Submit for review:

a. Copies of written guarantees agreeing to replace curtain wall work which fails to perform or lacks visual design intention shown and specified.

1.07 DELIVERY, STORAGE, AND HANDLING

A. Delivery of Materials:

1. Deliver curtain wall materials, components and accessories dry and undamaged, with manufacturer's original protective wrapping intact with information accurately representing package contents as approved by Engineer at time of Shop Drawing submission.

2. Deliver curtain wall system components in cartons or crated to provide protection during transit and job storage.

3. Inspect products upon delivery for damage. Minor damage may be repaired provided the finish items are not damaged. Where finish is damaged, remove these items from the site immediately and replace with new undamaged material at no additional expense to OWNER. All damaged material, even if included in the finished Work, shall be removed from the Work and replaced with new undamaged material at no additional expense to OWNER, even if discovered at the time of Final Acceptance.

B. Storage of Materials:

1. Do not store curtain wall system components in contact with concrete or other materials that might cause corrosion or staining.

2. Store curtain wall component under cover and in an area protected from the weather and with good air circulation around each piece. Avoid the use of non-vented plastic or canvas shelters which could create a humidity chamber. Immediately remove wrapping if it becomes wet.

3. Provide a one fourth (1/4) inch space between curtain wall system components in order to promote air circulation.

C. Handling of Materials:

1. Do not subject curtain wall components to bending or stress.

2. Do not damage edges or handle material in a manner that will cause scratches, warps or dents.

3. Handle material throughout the duration of the Work using appropriate handwear which does not damage finish of items to remain exposed in the finished Work.

D. Protection: Provide continuous protection of materials against damage primarily by storing materials under cover and above ground and away from other construction traffic.

E. Scheduling:

1. Schedule the arrival of curtain wall components and accessories to minimize the time they are stored at the site before installation.

2. Coordinate with other Work by furnishing Shop Drawings, inserts and similar items at the appropriate times for proper sequencing of construction without delays.

F. Pre-installation Conference:

1. Prior to the installation of the glazed aluminum curtain wall and associated Work, Contractor shall schedule and meet at the Site with the glazed aluminum curtain wall installer, the installer of each component of associated Work, the installers of substrate construction to receive the Work, the installers of other Work in and around curtain wall which must follow the glazed aluminum curtain wall work, including mechanical work, Engineer and other representatives directly concerned with performance of the Work. Review foreseeable methods and procedures related to the glazed aluminum curtain wall work, including but not necessarily limited to, the following:

a. Review Project requirements, including Drawings, Specifications and other Contract Documents.

b. Review required submittals, both completed and yet to be completed.

c. Review status of job mock-up.

d. Review availability of materials, tradesmen, equipment and facilities needed to make progress and avoid delays.

e. Review required inspection, testing, certifying and accounting procedures.

f. Review weather and forecasted weather conditions, and procedures for coping with unfavorable conditions.

g. Review regulations concerning code compliance, environmental protection, health, safety, fire and similar considerations.

h. Review procedures needed for protection of glazed aluminum window wall system during the remainder of the construction period.

2. Reconvene the meeting at the earliest opportunity if additional information must be developed in order to conclude the subjects under consideration.

3. Record any revisions or changes agreed upon, reasons therefor, and parties agreeing or disagreeing with them.

G. Do not change material gage, mullion spacing or construction details after Shop Drawing approval by Engineer.

H. Provide gages of material specified for all Work or of heavier gage if calculations based on performance criteria submitted as part of Shop Drawing approval process indicates the need for heavier gage material. All such substitutions shall be at no additional expense to OWNER. Where compliance with performance criteria indicates that materials of lesser gage or size may be adequate, provide specified gages and sizes as minimum acceptable standard. Where compliance with performance criteria indicates the need for materials of greater gage or thickness, provide greater gage or thickness at no additional expense to OWNER.

1.08 SPECIAL WARRANTY PROVISIONS / GUARANTEED PERIODS

A. Provide written guarantee agreeing to replace curtain wall system Work which fail in materials or workmanship within one year of the date of Final Acceptance. Failure of materials or workmanship shall include, but is not limited to, excessive leakage or air infiltration, excessive deflections, deterioration of finish or metal in excess of normal weathering, and defects in accessories, weatherstripping, and other components of the Work. Imperfections by reason of defective materials, workmanship or arrangement of the various parts shall be made good to the satisfaction of OWNER at METAL WINDOWS SUBCONTRACTOR 's expense.

B. The warranty specified shall not deprive OWNER of other rights OWNER may have under other provisions of the Contract Documents and shall be in addition to, and run concurrent with, other warranties made by Contractor or any subcontractor under requirements of the Contract Documents.

PART 2 – PRODUCTS

2.01 MANUFACTURERS

A. Provide manufacturer's custom units modified as necessary to comply with the details shown and the requirements specified herein from the following manufacturers or approved equal:

1. Kawneer North America, 555 Guthridge Ct., Technology Park/Atlanta, Norcross, GA 30092;

2. Oldcastle Building Envelope, 895 Motor Pkwy, Hauppauge, NY 11788;

3. YKK AP Commercial Aluminum Building Products, 270 Riverside Pkwy, Suite 100, Austell, GA 30168.

B. Basis of Design Products:

1. Kawneer 1620UT Curtain Wall System with 1-3/4” (44.45 mm) triple-glazed insulating glass and spandrel glass:[2]

a. Sightline: 2-inches (50.8 mm)

b. System depth: 6-inches (152.4 mm)

c. Outside-glazed pressure plate format

d. Glazing system: Four-sided captured

e. Glazing Plane: Front

f. Test to AAMA 501-04 and AAMA 501-06.

2. Kawneer GlassVent UT Windows (Structural Silicone Glazed):

a. Window Type: Project-Out or Outswing Casement as indicated on the Architectural Drawings.

b. Window Depth: 3-1/8 inch (79.4 mm)

c. Overall System Depth: 3-7/8 inch (98.4 mm)

d. Hardware: Three cam handle operators.

3. Kawneer Versoleil SunShade Outrigger System:

a. Type: Provide system compatible with specified aluminum storefront system.

b. Outrigger: 30 inch (762 mm) Square

c. Blade: Airfoil

2.02 MATERIALS / EQUIPMENT

A. General Product Requirements:

1. Provide manufacturer's custom units modified as necessary to comply with the details shown and the requirements specified herein.

2. Custom fabricate units wherever necessary for size, type and profile, using manufacturer's standard detailing only to the extent applicable.

3. Shop-fabricate each unit complete with framing, gaskets, and flashings, hardware and rain drainage accessories, anchorage provisions and other components. Disassemble only to the extent required for delivery and installation.

B. Aluminum Custom Die-Formed Extrusions:

1. Provide aluminum custom die-formed extruded mullions, pressure plates, and glazing stops and trim, as recommended by the curtain wall manufacturer to comply with the requirements of performance, strength, corrosion resistance, fabrication, application of required finish and control of color.

   a. Interior and exterior exposed portion of curtainwall system shall be 70% polyvinylidene fluoride (PVDF) coating conforming to AAMA 2605. Color to be selected by the Architect from manufacturer’s premium colors and finish.

2. Complying with ASTM B221: 6063-T6 alloy and temper

3. Provide thicknesses as necessary to comply with performance requirements, but not less than the following:

   a. Principal Extrusions: 0.25 inches minimum thickness.

   b. Extruded Glazing Stops and Trim: 0.062 inches minimum thickness.

   c. Vertical and horizontal framing members shall have nominal dimensions as shown on the Contract Drawings.

4. Recycled Content: Shall have a minimum of 50% mixed pre- and post-consumer recycled content.

5. Provide extrusions within commercial tolerances, formed true to details shown on the Contract Drawings and free of defects impairing strength, durability, color or finish.

C. Aluminum Sheet Alloy: Shall meet the requirements of ASTM B209.

D. Thermal Separators: Provide extruded silicone compatible elastomer that provides a minimum 1/4-inch (6.3 m) separation.

E. Glazing: Provide glazing to meet the requirements of Section 08 81 03 – Glass, Plastic and Glazing.

1. Outside glazed pressure plate format.[2]

2. High-Performance Grade Non-Structural Dry Gasket Glazing: Thermoplastic elastomers consisting of a fully vulcanized polyolefinic thermoplastic synthetic rubber of a type selected for maximum resistance to ultraviolet wavelength spectra exposure complying with the following physical properties:

    a. Hardness, ASTM D 2240: 70 Shore A.

    b. Tensile Strength, ASTM D 412: 1230 psi.

    c. Tear Strength, ASTM D 624: 159 lbs/lin. in.

    d. Elongation, ASTM D 412: 460%

    e. Brittleness Temperature, ASTM D 746: -75°F.

3. Spacers and Setting Blocks: Manufacturer's standard elastomeric type.

4. Bond-Breaker Tape: Manufacturer's standard TFE-fluorocarbon or polyethylene material to which sealants will not develop adhesion.

5. Glazing Sealants: Manufacturer's standard for joint type.

F. Fasteners: Provide type and size required for proper support and performance, fabricated in compliance with FS FF-S-92 of non-magnetic stainless steel.

G. Reinforcing Members: Provide aluminum or non-magnetic stainless steel reinforcing members complying with ASTM B456 for Type SC 3 severe service conditions with sufficient strength to withstand the design pressure indicated.

H. Brackets and Reinforcements and Splice Clips: Provide aluminum brackets and reinforcements wherever possible. Where steel units are required for higher strength provide Type 316 stainless steel coated on aluminum contact surfaces with bituminous paint.

I. Sealants:

1. For sealants required within fabricated curtain wall systems, provide permanently elastic, non-shrinking, and non-migrating type recommended by sealant manufacturer for joint size and movement.

2. Vertical and horizontal joints bordered on all sides of curtain wall assemblies to be in accordance with 07 90 00 Joint Fillers, Sealants and Caulking.

J. Bituminous Paint: Cold-applied asphalt mastic complying with SSPC-Paint 12, compounded for 30-mil thickness per coat as an electrolytic break between aluminum mullions and glazing caps.

K. Slip-Joint Linings: Provide plastic sheets, spacers or bearing pads as required to ensure free movement between surfaces where expansion and deflection movements are intended. Provide fluorocarbon resin or equivalent plastic units of the sizes and thicknesses recommended by the manufacturer to permanently prevent "freeze-up" of joints.

L. Anchors, Clips, and Accessories:

1. Non-magnetic stainless steel complying with ASTM B633 for SC 3 severe service conditions.

2. Inserts for Anchorage in Concrete and Masonry: Furnish non-magnetic stainless steel anchors of the type required for proper anchorage based on the structural calculations of the curtain wall fabricator.

3. Expansion Anchor Devices: Where inserts have not been provided in supporting concrete or masonry structure, provide drilled-in expansion bolt anchors of non-magnetic stainless steel.

M. Pressure Plate: Provide aluminum pressure plate fastened to the mullion with stainless steel screws.

N. Aluminum Welding Rods and Electrodes: AWS A5.10.

O. Tolerances: References to tolerances for wall thickness and other cross-sectional dimensions of glazed curtain wall members are nominal and in compliance with AA Aluminum Standards and Data.

P. Aluminum and Glass Doors: Provide aluminum and glass doors to be constructed with the material and finishes of the work of this section and provided as part as the curtain wall system by the same manufacturer in accordance with Section 08 41 13 – Aluminum-Framed Entrances and Storefronts.

2.03 FABRICATION / ASSEMBLING / FINISHES

A. Custom Curtain Wall:

1. Take field measurements, prior to start of Shop Drawings and fabrication of curtain wall system components. Do not delay job progress. Allow for erection tolerances corresponding with specified tolerances where final dimensions cannot be established before fabrication.

2. Complete the fabrication and assembly of the curtain wall system at the shop to the greatest extent possible, so as to minimize field cutting, splicing, fastening, sealing, finishing and similar Work. Maintain provisions for expansion and movement as required. Disassemble only as necessary for shipment and erection. Maintain true continuity of line and accurate relation of planes and angles. Provide

secure attachment and support at mechanical joints, with hairline fit of contacting members.

3. Provide sizes, shapes and profiles as shown on the Contract Drawings and required to fabricate curtain wall system.

4. Provide mullions as shown on the Contract Drawings, projecting inside the plane of the glass with one exterior pressure plate section per million. Attach covers with PVC isolators.

5. Provide mullions fabricated for field connection at intersections, using screws and channel clips furnished by the manufacturer.

6. Complete the cutting, fitting, forming, drilling and grinding of all metal work prior to cleaning, finishing, treatment, and application of coatings.

7. Reinforce the Work with structural sections as necessary for performance requirements, and for support of the system. Separate dissimilar metals with bituminous paint to prevent corrosion. Separate metal surfaces at moving joints with plastic inserts or other non-abrasive concealed inserts which will permanently prevent "freeze-up" of the joint.

8. Provide curtain wall system capable of accommodating not less than minimum clearances for thickness and type of glass according to requirements specified in Section 08 81 03 – Glass, Plastic, and Glazing.[2]

9. Components shall be fabricated to drain water penetrating joints, condensation occurring in glazing channels, condensation occurring within framing members, and moisture migrating within the system to the exterior.

B. Flashing Sheets and Plates:

1. Provide miscellaneous flashings and closures as required to complete the Work and as shown on the Contract Drawings and approved Shop Drawings.

2. Form shapes with sharp profiles, straight and free of defects or deformation, before finishing.

3. Prepare components to receive concealed fasteners and anchor and connection devices. Exposed fasteners for joining and anchoring shall not be approved by Engineer. Blind fastening techniques shall be used for fabrication of all curtain wall and glazing assemblies and flashing.

C. Welding:

1. Follow recommendations of AWS A5.10, to avoid discoloration at welds. Grind exposed welds smooth and restore mechanical finish. Remove arises from cut edges and ease edges and corners to a radius of approximately 1/64-inch.

2. Weld components to comply with referenced standards and Shop Drawings. Weld before finishing components. Weld in concealed locations to the greatest extent possible. Remove all weld spatter and welding oxides from exposed joint surfaces by descaling and grinding. Restore finish to match adjacent surfaces.

3. Capacitor discharge stud welding techniques shall be used to fasten studs to the curtain wall and glazed assemblies in order to eliminate marring or discoloration of visible side of face sheets.

D. Finish Coating: 100% Fluoropolymer Resin Powder Coat System. Finish thickness to be 1.5 to 3.0 mils. Finish to allow zero VOCs to be emitted into facility of application or at job site. Finish to adhere to the requirements of AAMA 2604 and as follows.

1. Furnish manufacturer's twenty (20) year warranty for finish.

2. Provide color as selected by Engineer from standard and premium Powder Coat colors.

3. 100% Fluoropolymer Resin Powder Coat System. Finish thickness to be 1.5 to 3.0 mils.

4. Finish to allow zero VOCs to be emitted into facility of application or at job site.

5. Finish to adhere to an AAMA 2604 H Hardness rating.

6. Furnish manufacturer's twenty (20) year warranty for finish.

E. Dissimilar Metals:

1. On all surfaces where aluminum will come into contact with dissimilar metals, concrete or masonry, protect against galvanic action by painting contact surfaces with bituminous paint specified.

2.04 SOURCE QUALITY CONTROL / SHOP TESTS

A. Obtain all curtain wall system components, flashing and accessories from the same manufacturer.

B. Engage a manufacturer who requires that a Technical Representative be present at the start of the Work and who requires that the completed Work be inspected by a Technical Representative of the curtain wall manufacturer.

PART 3 – EXECUTION

3.01 EXAMINATION / PREPARATION

A. The METAL WINDOWS SUBCONTRACTOR shall examine the supporting structure and other elements of the substrate and conditions under which the curtain wall system is to be performed and notify Engineer in writing of unsatisfactory tolerances which exceed specified limits in other Work adjoining curtain wall system, and other conditions detrimental to proper and timely completion of the Work. Do not proceed with erection until unsatisfactory conditions have been corrected in a manner acceptable to Engineer.

B. Verify to Engineer gauge of aluminum extrusions, closures and flashing brought to the site by actual measurement of on-site material in the presence of Engineer.

3.02 INSTALLATION

A. General:

1. Separate dissimilar metals and isolate Work from incompatible substrates by use of underlayments specified. Comply with manufacturer's recommendations for other forms of protection of the curtain wall system components against corrosion.

2. When Work abuts or members into adjacent dissimilar metals, the juncture shall be executed in a manner which facilitates drainage.

3. Provide thermal expansion for running trim, flashings, gutters and other items exposed for more than fifteen (15) feet – zero (0) inches continuous length. Maintain a watertight installation at expansion seams. Locate expansion seams at ten (10) feet – zero (0) inch intervals, and two (2) feet – zero (0) inch each side of corners and intersections and at high points of flashing and trim Work.

4. Fabricate and install the Work with lines and corners of exposed units true and accurate. Form exposed faces flat and free of buckles, excessive waves and avoidable tool marks, considering the temper and reflectivity of the metal. Provide uniform, neat butt joints with backup plates to close back of joint.

5. Conceal fasteners and expansion provisions in exposed Work, and locate so as to minimize the possibility of leakage. Provide expansion joint systems using only metal components.

6. Provide integrally installed cleat-type anchorages for metal flashings and trim and all metal pans, spaced no greater than twelve (12) inches on center and arranged to relieve stresses from building movement, and thermal expansion and contraction.

B. Comply with manufacturer’s specifications and recommendations for the installation of curtain wall system components as shown on Shop Drawings approved by Engineer.

C. Do not install component parts that are observed to be defective in any way, including warped, bowed, dented, abraded, scratched, gouged and broken members, and including glass with edge damage.

D. Do not cut, or trim, component parts during erection, in a manner which would damage the finish, decrease the strength, or result in a visual imperfection or a failure in performance of the aluminum curtain wall work. Return component parts which require alteration to the shop for refabrication, if possible, or for replacement by new parts.

E. Install component parts level, plumb, true to line and with uniform joints and reveals. Secure to structure with non-staining and non-corrosive shims, anchors, fasteners, spacers and fillers. Use erection equipment which will not mar or stain finished surfaces, and will not damage the component parts.

F. Apply two coats of bituminous coating of approximately 30-mil dry film thickness per coat on concealed contact surfaces of dissimilar materials before installation, wherever there is the possibility of corrosive or electrolytic action.

G. Anchor component parts securely in place, as shown on approved Shop Drawings, by bolting, or other permanent mechanical attachment system, which will comply with performance requirements and permit movements which are intended or necessary. Install slip-joint linings to ensure movement as intended or necessary.

H. Clean debris, dust and other substances from behind the aluminum curtain wall as it is erected, and provide temporary closures if necessary, to prevent the accumulation of such substances in the void spaces within the curtain wall system.

I. Attach exterior pressure plates. Install snap covers and sunshades over pressure plates.

J. Install thermal barrier clips before installing covers.

K. Install glass using dry glazing retainers which provide a firm but resilient clamping grip on the glass.

L. Erection Tolerances:

1. Limit variations from plumb, level or dimensioned angle to the following:

a. One eighth (1/8) inch maximum deviation in story height or in ten (10) foot vertical or angular run, and in twenty (20) foot horizontal runs.

b. One fourth (1/4) inch maximum deviation in forty (40) foot runs, all directions.

2. Limit variations from theoretical member locations shown, based on established floor lines and column lines, including variations from plumb and level, to the following:

a. Three eight (3/8) inch total maximum deviation for members at all locations.

b. One eighth (1/8) inch maximum change in deviation for members for ten (10) foot runs, all directions.

3. Limit offsets in end-to-end and edge-to-edge alignments of adjoining and consecutive members, which form planes, continuous runs and profiles, to the following:

a. One sixteenth (1/16) inch maximum offset in flush alignment, including members which are to be one half (1/2) inch or less out-of-flush, and including members which are separated two (2) inches or less by a reveal or protrusion in the plane of the aluminum curtain wall.

b. One eighth (1/8) inch maximum offset in alignments which are to be out- of-flush by more than one half (1/2) inch or separated by a reveal or protrusion of more than two (2) inch width.

3.03 FIELD TESTING / QUALITY CONTROL

A. Water Spray Test: Perform test in accordance with AAMA Standard 501.2, except limit test area to one bay wide (but not less than 20 feet or more than 40 feet) by one story high, located from mid-bay to mid-bay and from mid-story-height to mid-story-height.

B. Water Penetration Test: In addition to water spray testing the METAL WINDOWS SUBCONTRACTOR shall engage a qualified independent testing agency, approved by Engineer, to perform additional field testing, as follows:

1. Test areas of installed system shown on the Contract Drawings for compliance with system performance requirements according to ASTM E 1105 at minimum differential pressure of twenty (20) percent of inward acting wind load design pressure as defined by ASCE 7, but not less than 6.24 pounds per square foot.

C. Air Penetration Test: Test areas of installed system shown on the Contract Drawings for compliance with system performance requirements according to ASTM E783.

D. Depending upon the prevalence or absence of leakage in the initial water penetration test, and upon measures adopted by the glazed aluminum curtain wall installer to eliminate sources of leakage from subsequently erected work, Engineer will determine the necessity, and scope of, additional tests. In no case will the total of tested area amount to less than 1.0 percent, nor more than 10.0 percent of the glazed aluminum curtain wall area, except as subsequently authorized by Engineer.

3.04 ADJUSTING / PROTECTION / CLEANUP

A. Do not permit construction period traffic near completed curtain wall system. Only the original installer shall be permitted in the area of the Work and only as required to comply with the Work of this Section.

B. Maintain the curtain wall system in a clean condition throughout the construction period, so that it will be without any evidence of deterioration or damage, other than the effects of normal weathering, at the time of Final Acceptance. Select methods of cleaning which will promote the achievement of uniform appearance and stabilized colors and textures for materials that weather or age with exposure.

C. Protect the curtain wall system, including glass, during the remainder of the construction period.

D. Remove and replace with new material curtain wall components which have been damaged, including finish, beyond successful repair at no additional expense to OWNER.

E. Immediately before the time of Final Acceptance, clean the curtain wall system thoroughly, inside and out. Demonstrate proper cleaning methods to OWNER's maintenance personnel during this final cleaning. Remove all surface contaminants which may cause stainless steel to weather in a non-uniform manner or which could cause the stainless steel to degrade over time.

F. At the completion of the Work, clean or replace adjacent Work, marred by the Work of this Section.

G. Remove all materials and debris and leave the Site of the Work in a clean condition.

END OF SECTION

10/01/18

ATTACHMENT O – 09 65 00 RESILIENT FLOORING

DIVISION 09

RESILIENT FLOORS

(Filed Sub Bid Required)

SECTION 09 65 00

RESILIENT FLOORING[1]

PART 1 – GENERAL

1.01 DEFINITIONS

A. FSB: Filed Sub-Bid(der).

B. FSSB: Filed Sub-Sub-Bid(der).

1.02 FILED SUB-BID REQUIREMENTS

A. A FSB submitted for the work of Division 09 – Resilient Floors shall include the work specified in the following Sections:

1. Section 09 65 00 – Resilient Flooring.

B. FSB shall comply with the requirements of Massachusetts General Laws c. 149, §44F, shall be submitted on the form provided in Section 00 40 01 – Forms for Filed Sub-Bid, at the time specified in Section 00 11 00 – Advertisement for Bids, and shall be accompanied by a bid deposit complying with the requirements of Massachusetts General Laws cc. 149, §44B(2) and all other documents required by Section 00 20 00 – Instructions to Bidders.

C. The work of Division 09 – Resilient Floors is indicated on Drawing Nos. G-002 through G-005 – Index of Drawings and is listed on the Drawing title block on individual Drawings. Drawings that are denoted in the title block as requiring a Filed Sub-Bid Contractor shall require a Filed Sub-Bid Contractor for the work shown in whole or in part of the Drawing.

D. Staging and Scaffolding:

1. Hoisting Equipment: The RESILIENT FLOORING SUBCONTRACTOR shall furnish, install and maintain all mechanical hoisting equipment, operating personnel and rigging required for the execution of the Work as specified in this Section.

---

[1] Addendum No. 5

2. Staging, Planking and Scaffolding: The RESILIENT FLOORING SUBCONTRACTOR shall furnish, install and maintain all staging, planking and scaffolding up to eight feet in height required for the Work in this Section.

1.03 SECTION INCLUDES

A. Resilient flooring as specified herein shall include, but not be limited to, rubber floor tile, rubber base, corner guards and appurtenances.

B. Resilient flooring items shall be provided where shown on the Contract Drawings, specified herein, or as required for a complete installation.

C. Coordination

1. Review products and installation procedures specified under other Sections that may directly affect the performance of the resilient tile flooring and coordinate the installation of items that must be installed with, or before, the resilient flooring in order to produce acceptable work.

2. Coordinate requirements for maximum safe moisture-emission level of concrete slabs in compliance with resilient tile flooring manufacturer's written recommendations and in compliance with ASTM E1643.

3. Coordinate the finishing of substrates for acceptability of substrates to resilient tile flooring manufacturer, as indicated on approved Working Drawings.

4. Remove all chemicals, compounds and other materials from substrate to receive the work of this Section, as may be required by the resilient tile flooring manufacturer, even if chemicals, compounds and other materials are permitted by other Sections.

1.04 REFERENCES

A. ASTM F1344, Standard Specification for Rubber Floor Tile

B. ASTM D2047 - Standard Test Method for Static Coefficient of Friction of Polish-Coated Floor Surfaces as Measured by the James Machine

C. ASTM D2240, Standard Test Method for Rubber Property – Durometer Hardness

D. ASTM D3389, Standard Test Method for Coated Fabrics Abrasion Resistance (Rotary Platform Abrader)

E. ASTM E84 - Standard Test Method for Surface Burning Characteristics of Building Materials.

F. ASTM E648 - Test Method for Critical Radiant Flux of Floor-Covering Systems Using a Radiant Heat Energy Source

G. ASTM E662 - Standard Test Method Specific Optical Density of Smoke Generated by Solid Materials.

H. ASTM E1643 - Standard Practice for Installation of Water Vapor Retarders Used in Contact with Earth or Granular Fill Under Concrete Slabs

I. ASTM F386 - Standard Test Method for Thickness of Resilient Flooring Having Flat Surfaces

J. ASTM F540 - Standard Test Method for Squareness of Resilient Tile Flooring by Dial Gage Method

K. MAAB - Massachusetts Accessibility Code 521 CMR: Architectural Access Board

L. MSBC - Massachusetts State Building Code

M. NFPA 253 - Test Method for Critical Radiant Flux of Floor Covering Systems Using a Radiant Energy Source

N. NFPA 258 - Test Method for Specific Density of Smoke Generated by Solid Materials

1.05 DEFINITIONS

A. Critical Radiant Flux (CRF): According to ASTM E648, the measure of the ability of a floor covering to resist the spread of flames when located in a corridor exposed to flames and hot gases from a room fire. The higher the CRF value, the more resistant the material is to flame spread.

B. Excessive Wear: Loss of thickness of more than 0.0025-inches of material per year based on specified traffic conditions.

C. Low Vibration Profile for Vinyl Products: The combination of resilient compounds and tile profile design that will eliminate or noticeably reduce vibration of wheeled vehicles. Wheels of 4-inch diameter or greater should cause no vibration or noticeable sound and should not contribute to ambient noise.

D. Migrating Waxes: Waxes and soil-releasing agents that are chemically a component of the product's formulation, continually traveling to the vinyl product's surface when activated by use.

E. Non-Solvent Adhesives: Adhesives with a non-solvent base requiring no open time to permit solvent flash.

F. Optical Smoke Density: The optical density of smoke developed by burning a solid material, such as resilient tile flooring, established according to ASTM E662.

1.06 SYSTEM DESCRIPTION

A. Manufacturer's Standards: In additions to the standards listed herein, the resilient flooring products and their installation shall be in accordance with the manufacturer's published recommendations and specifications.

B. Performance Requirements

1. Static-Load Resistance: ASTM F-970 800 psi, ≤ .005”

2. Optical Smoke Density, ASTM E662: Less than 450

3. Critical Radiant Flux (CRF), ASTM E648: Not less than 0.45 watts per square centimeter; Class 1

4. Slip Resistance, ASTM D2047 and ADAAG Appendix A4.5: Not less than 0.6 static coefficient of friction (James Test), for horizontal surfaces and 0.8 for ramps.

5. Greenguard Indoor Air Quality Certified and CA 01350 Compliant

1.07 SUBMITTALS

A. The RESILIENT FLOORING SUBCONTRACTOR shall prepare and submit for approval catalog cuts and reference materials in accordance with the Specification 01300 - Submittals.

B. Product Data: The RESILIENT FLOORING SUBCONTRACTOR shall submit copies of specifications, installation instructions, maintenance instructions, and general recommendations from the resilient flooring item manufacturers, for each type of resilient flooring product. Manufacturer's data substantiating that the materials comply with the requirements shall be included.

C. Samples: Samples of floor tile, edging and base shall be submitted for color selection and pattern.

1. Submit each type and color of resilient tile and base required. Provide full size samples of each type of tile and base product and 12-inch lengths of each auxiliary product and accessory specified.

2. Samples shall show the full range of color and pattern variation. Sample submittals will be reviewed for color, texture and pattern only. Compliance with all other requirements is the responsibility of RESILIENT FLOORING SUBCONTRACTOR.

D. Working Drawings: Submit for approval the following:

1. Plans drawn to a scale of 1/4 inch equal to 1 foot-0 inch showing all tiles and all stair covering units and components accurately located in final positions, as they will occur in the finished work, and showing actual dimensions of areas to receive the work. Show all patterns required for the work and the location of each color and texture required for each tile pattern.

E. Verification of Substrate Conditions: The RESILIENT FLOORING SUBCONTRACTOR shall submit a verification that all substrate conditions are in accordance with the requirements of the specifications, prior to commencement of resilient flooring installation.

1.08 QUALITY ASSURANCE

A. General: Provide resilient tile that complies with all applicable code requirements for flame retardation and smoke density.

B. Smoke Density: Provide resilient tile with a smoke density rating of 450 or less in accordance with ASTM E662.

C. Flame Spread: Provide resilient tile with a flame spread rating of 75 or less in accordance with ASTM E84.

1. Wherever a flame spread, smoke development or CRF classification is shown or specified for resilient tile flooring (Class B, Class I and similar designations), provide components complying with applicable requirements for materials and installation established by ASTM, and other governing authorities having jurisdiction.

D. Manufacturer Qualifications:

1. Provide all components of resilient tile flooring system and auxiliary products produced by a single manufacturer, including recommended primers, adhesives and edging strips, as required.

2. Provide products from manufacturer who participates in ISO certification programs and who manufacture resilient tie flooring systems and auxiliary products conforming to the requirements of these programs.

E. Installer Qualifications:

1. Engage a single installer regularly performing installation of resilient tile flooring with documented skill and successful experience in the installation of the types of materials required; and who agrees to employee only tradesmen who are trained, skilled and have successful experience in installing the types of materials specified.

2. Submit name and qualifications along with the following information on a minimum of three successful projects:

a. Names and telephone numbers of owners, architects or engineers responsible for projects

b. Approximate contract cost of the resilient flooring

c. Size of area installed.

F. Source Quality Control

1. Furnish all components of resilient flooring system from a single manufacturer, and from a single supplier with adequate resources to provide products of consistent performance characteristics, physical properties and appearance, without delaying the work.

2. Obtain materials only from manufacturers who will, if required, send a qualified technical representative to the Site, for the purpose of advising installer of proper procedures and precautions for the use of the materials.

3. Provide products from manufacturers who participate in ISO 9002 quality control programs.

4. Colors and Patterns: Provide resilient floor tile and stair covering units with uniformly distributed color and pattern throughout the thickness of the tile, except as otherwise specified. Variation in shades and off pattern matches between containers will not be acceptable.

G. Allowable Tolerances

1. Surfaces to Receive Resilient Flooring Systems: Surface shall be smooth, level, at the required finish elevation, without more than 1/8 inch in 10 feet variation from level, or slopes, shown. Provide surfaces free of depressions, raised areas, or other defects that may telegraph through installed flooring.

2. Tile Thickness: In compliance with ASTM F386

3. Tile Squareness: In compliance with ASTM F540

1.09 DELIVERY, STORAGE AND HANDLING

A. Delivery of Materials:

1. Materials shall not be delivered to the project Site before the time of installation.

2. Materials shall be delivered in sufficient quantities to allow continuity of the work.

B. Storage of Materials:

1. Materials shall be stored in original, undamaged containers with manufacturer's labels and seals intact.

2. All materials shall be stored in a dry, enclosed area, off the ground and away from all possible contact with water, ice or snow.

3. Damage to materials during storage shall be prevented primarily by minimizing the amount of time they are stored at the site before being incorporated into construction systems.

C. Handling of Materials:

1. Materials shall be handled in such a manner to avoid damage or breakage.

2. Materials shall not be exposed to detrimental conditions or physical damage. Materials which are so exposed shall be removed from the Site and shall not be incorporated into the work.

3. Materials shall be handled in such a manner so as to prevent inclusion of foreign materials.

4. Packages or containers shall not be opened until all necessary preparatory work is complete and installation is to begin immediately. Materials shall not be allowed to become wet or soiled or covered with ice or snow.

1.10 ENVIRONMENTAL REQUIREMENTS

A. The ambient temperature of the area in which the work occurs shall be at least 60 degrees F and rising. A minimum 60 degree F ambient temperature shall be maintained without interruption while the work is being done, and for at least three days after completion of the work.

B. Material shall be PVC free made of rubber, mineral fillers and environmentally compatible color pigments using recycle rubber as part of the material content.

1.11 WARRANTY

A. General: The special warranties specified in this Article shall not deprive Owner of other rights or remedies Owner may otherwise have under the Contract Documents and shall be in addition to, and run concurrent with, other warranties made by Contractor or Subcontractor under the Contract Documents.

B. Special Warranties

1. Resilient Flooring Wear Warranty: Provide written warranty, signed by the manufacturer and running to benefit of Owner, agreeing to replace, for a period of ten years from the date of Substantial Completion, resilient tile units that show excessive wear, as specified.

1.12 SPARE PARTS

A. The RESILIENT FLOORING SUBCONTRACTOR shall furnish 10 floor tiles as replacement flooring for each type, color and size of tile used throughout the project from the same manufactured lot as the materials installed.

B. Do not provide partial containers or packages of materials. Round up quantities to furnish only complete, unopened and undamaged containers and packages. Packages shall have legible labels accurately representing contents of container or package indicating compliance with approved samples and Working Drawings, and matching materials actually installed.

C. Do not furnish materials whose remaining shelf life will be less than six months at the time of Substantial Completion. Furnish only materials that are accompanied by a documented record of proof of being continuously stored and handled according to manufacturer's recommended storage and temperature limitations.

PART 2 – PRODUCTS

2.01 MANUFACTURERS

A. Resilient Base and accessories as manufactured by the following:

1. Basis of Design -Tarkett North America, 30000 Aurora Road, Solon, OH 44139. Tel: 800-899-8916. Web: www.tarkett.com.

2. Roppe.

3. Flexco

B. Luxury Vinyl Tile and accessories as manufactured by the following:

1. Basis of Design: The Drift Collection, Finish to be Wood by Mannington Commercial.

2. Armstrong.

3. Interface Inc.

2.02 MATERIALS

A. General: Manufactured units shall be completely asbestos-free.

B. Resilient Base (RB): Basis of Design -Tarkett Millwork Series Reveal Profile Series in eight (8)-inch, six (6)-inch and four and one-half (4 ½)-inch at locations indicated on the contract documents. Accessories to include transition to adjoining floor finishes.

C. Luxury Vinyl Tile (LVT): Simulated Wood Grain type in six (6)-inch to ten (10)-inch widths by thirty-six (36)-inch to forty-eight (48)-inch lengths by 0.1-inch thickness at locations indicated on the contract documents. Accessories to include transition to adjoining floor finishes.

D. Edging: Transitions with Tile to be work of Section 09 30 00 – Tiling. Edging with carpet to be work of Section 09 68 13 Carpet. All other edging to be selected from manufacturers complete line of thermoplastic rubber finishing accessories.

E. Adhesive: Provide adhesive for tile and base as recommended by the tile and base manufacturer for the type of floor and wall surface indicated on the Contract Drawings.

PART 3 – EXECUTION

3.01 EXAMINATION

A. The Contractor shall verify that areas to receive resilient flooring materials are properly prepared and completed to final grades and elevations.

B. Contractor and installer shall examine the areas and conditions under which resilient tile flooring work will be performed and notify Engineer in writing of conditions detrimental to the proper and timely completion of the work. Do not proceed with the work until unsatisfactory conditions have been corrected in a manner acceptable to Engineer.

3.02 PREPARATION

A. General: Surfaces to receive tile and base shall be prepared in accordance with the manufacturer's instructions

B. Prior to commencing any work, test the substrate for moisture to ascertain its acceptability to receive the finish flooring. Remove all dirt, grease, oil and other contaminants which might impair the proper bond of materials. Perform all straightening, leveling and smoothing as required for level floor. Inspect dividing and edging strips for position and elevation.

C. Concrete: Bond and moisture tests shall be performed on concrete floors to determine that the concrete is thoroughly cured and dry prior to the tile installation. Tests and results shall be as recommended by the resilient flooring manufacturer.

3.03 INSTALLATION

A. Resilient flooring tile and base shall be installed in accordance with the manufacturer's recommendations and approved Working Drawings.

3.04 PROTECTION

A. Protect installed flooring from mars, marks, indentations, and other damage from construction operations detrimental weather and placement of equipment and fixtures during the remainder of the construction period and to Substantial Completion. Use protection methods recommended in writing by the resilient flooring manufacturer.

B. Work which cannot for reasons acceptable to Engineer be covered with complete construction system before onset of weather detrimental to the work shall be completely covered and protected in such a manner as to deflect water and weather from the installation without damaging adjacent work.

C. Resilient flooring work shall be protected from all damage and abuse until Final Acceptance by the Owner.

D. Resilient tile flooring system components, damaged for any reason, shall be replaced with new, undamaged material, in compliance with the requirements of the Specifications at no additional expense to the Owner.

3.05 ADJUSTMENT

A. System components which are dislodged, damaged, expanded, broken, penetrated or crushed by subsequent installation operations or damaged by detrimental weather shall be immediately replaced with undamaged material in compliance with the Specifications and properly protected as specified.

3.06 CLEANING

A. The following operations shall be performed immediately after installing resilient products:

1. All adhesive and other surface blemishes shall be removed from resilient tile flooring, using neutral-type cleaners as recommended by the resilient tile flooring manufacturer.

2. Floors shall be vacuumed thoroughly.

3. Floors shall not be washed until after time period recommended by resilient tile flooring manufacturer.

4. Floors shall be damp mopped to remove marks and soil.

B. Floor surfaces shall be cleaned not more than four days before scheduled inspection to determine Substantial Completion of the work. Cleaning products shall be in accordance with the manufacturer's approved written recommendations.

END OF SECTION

ATTACHMENT P – 11 11 36.13 COMMERCIAL ELECTRIC VEHICLE CHARGING UNIT

DIVISION 26

ELECTRICAL

(FILED SUB BID REQUIRED)

SECTION 11 11 36.13

COMMERCIAL ELECTRIC VEHICLE CHARGING UNIT[1]

PART 1 - GENERAL

1.01 FILED SUB-BID REQUIREMENTS

A. This Section is part of the filed sub-bid for Division 26 – Electrical. See Section 26 05 00.

1.02 SECTION INCLUDES

A. Section furnishing and installing includes electric-vehicle charging stations (EVCS) that provides AC Level 1 and Level 2 EV charging.

1.03 RELATED DOCUMENTS

A. Drawings and general provisions of the Contract, including General and Supplementary Conditions and Division 01 Specification Sections, apply to this Section.

1.04 SUBMITTALS

A. Product Data: For each type of product.

B. Shop Drawings: For EVCS.

1. Include plans, elevations, sections, and mounting details.
2. Include details of equipment assemblies. Indicate dimensions, weights, loads, required clearances, method of field assembly, components, and location and size of each field connection.
3. Detail fabrication and assembly of mounting assemblies for EV charging equipment.
4. Include diagrams for power, signal, and control wiring.
5. Include verification of wireless communications service at each location of EVCS.

1 Addendum No. 5

1.05 INFORMATIONAL SUBMITTALS

A. Coordination Drawings: Area plans and details, drawn to scale, and coordinated with each other, using input from installers of the items involved.

B. Qualification Data: For factory-authorized service representative.

C. Seismic Qualification Data: Certificates, for EVCS, accessories, and components, from manufacturer.

D. Field quality-control reports.

E. Sample warranty.

1.06 CLOSEOUT SUBMITTALS

A. Operation and maintenance data.

B. Software and Firmware Operational Documentation:

1. Software operating manuals.
2. Program Software Backup: On USB, CD, Cloud, or approved media, complete with configuration files.
3. Device address and password list.
4. Printout of software application and graphic screens.

1.07 QUALITY ASSURANCE

A. Installer Qualifications: An authorized representative who is trained and approved by manufacturer.

1.08 FIELD CONDITIONS

A. Wireless Survey: Complete wireless survey to determine if wireless provider signals meet or exceed manufacturer's recommended minimum values.

1.09 WARRANTY

A. Manufacturer's Warranty: Manufacturer and Installer agree to repair or replace components of EVCS that fail(s) in materials or workmanship within specified warranty period.

1. Warranty Period: Two years from date of Substantial Completion.

PART 2 - PRODUCTS

2.01 MANUFACTURERS

A. ChargePoint CT4021 Bollard Charging Station.

B. Source Limitations: Obtain EVCS from single manufacturer.

2.02 PERFORMANCE REQUIREMENTS

A. Ambient Temperature: -22 degrees F to 122 degrees F.

B. Relative Humidity: Zero to 95 percent.

C. Altitude: Sea level to 400 feet.

D. Thermal Movements: Allow for thermal movements from ambient and surface temperature changes.

E. Surge Withstand: 6 kV at 3000 A.

F. Electrical Components, Devices, and Accessories: Listed and labeled as defined in NFPA 70, by a qualified testing agency, and marked for intended location and use.

G. EV Charging Levels:

1. Dual vehicle, AC Level 2 at up to 7.2 kW per vehicle.

2.03 EVCS DESCRIPTION

A. Comply with NFPA 70.

B. Comply with:

1. UL 2231-1.
2. UL 2594.
3. SAE J1772 for SAE combo chargers.

C. Comply with ADA-ABA Accessibility Guidelines.

D. Metering: Revenue grade meter.

E. Input Power:

1. Dual, 40 A, 208/240-V ac, 60 Hz, single-phase services per charger.

F. Integral GFCI.

G. Auto-GFCI fault retry.

H. EVCS Mounting: Bollard mount as indicated on Drawings.

I. Enclosures:

1. Rated for environmental conditions at installed location.
   a. Outdoor Locations: NEMA 250, Type 3R.
   b. Lockable.
   c. Tamper resistant.

J. EV Cable and Connectors:

1. SAE J1772 connector.
2. Single connectors with locking holster.
3. 18-foot cable with cable management system.
4. Field-replaceable connector and cable assembly.

K. Status Indicators:

1. LEDs to indicate power, charging, charging complete, system status, faults, and service.

L. Display Screen:

1. Daylight viewable, UV-protected display with 5.7 inch, color, LCD, touch human-machine interface capability.
2. Displays power, charging, charging complete, remote control, system status, faults, and service.

M. Networking:

1. WAN Communications: Cellular GSM/GPRS.
2. Capable of remote configuration and reporting.

N. Payment System:
1. PCI compliant.
2. Capable of remote control and authorization.

O. Charging Network: Compatible with the Chargepoint EV charging network.

1. Multiple units shall independently connect to charging network.
2. Individual units shall be capable of indicating station status and availability.

PART 3 - EXECUTION

3.01 INSTALLATION

A. Comply with NECA 1 and NECA 413.

B. Concrete Base Mounting:

1. Install EVCS on 12-inch nominal-diameter and 48-inch deep concrete base. Comply with requirements for concrete base specified in Section 03 30 00 "Cast-in-Place Concrete."

C. Wiring within Enclosures: Bundle, lace, and train conductors to terminal points with no excess and without exceeding manufacturer's limitations on bending radii. Install lacing bars and distribution spools.

D. Temporary Lifting Provisions: Remove temporary lifting eyes, channels, and brackets and temporary blocking from enclosures and components.

E. Secure covers to enclosure.

3.02 CONNECTIONS

A. Connect wiring according to Section 26 05 19 "Low Voltage Conductor and Cables."

B. Comply with grounding requirements in Section 26 05 26 "Grounding and Bonding for Electrical Systems."

C. Comply with requirements for installation of conduit in Section 26 05 33.13 "Conduit for Electric Systems." Drawings indicate general arrangement of conduit, fittings, and specialties.

D. Tighten electrical connectors and terminals according to manufacturer's published torque-tightening values. If manufacturer's torque values are not indicated, use those specified in UL 486A-486B.

E. Verify that all electrical connections have been made according to the manufacturer's instructions. Remove all burrs, shavings, and detritus from inside the enclosure.

F. After confirming all connections, install covers and tighten fasteners to according to manufacturer's instructions.

3.03 IDENTIFICATION

A. Identify system components, wiring, cabling, and terminals. Comply with requirements for identification specified in Section 26 05 53 "Identification for Electrical Systems."

3.04 FIELD QUALITY CONTROL

A. Manufacturer's Field Service: Engage a factory-authorized service representative to test and inspect components, assemblies, and equipment installations, including connections.

B. Perform tests and inspections with the assistance of a factory-authorized service representative.

C. Tests and Inspections:

1. For each unit of EVCS, perform the following tests and inspections:

   a. Unit self-test.
   b. Operation test with load bank.
   c. Operation test with EV.
   d. Network communications test.

D. EVCS will be considered defective if it does not pass tests and inspections.

E. Prepare test and inspection reports.

END OF SECTION

ATTACHMENT Q – 14 21 23 ELECTRIC TRACTION PASSENGER ELEVATOR

DIVISION 14

ELEVATORS

(Filed Sub Bid Required)

SECTION 14 21 23

ELECTRIC TRACTION PASSENGER ELEVATOR[1]

PART 1 – GENERAL

1.01 FILED SUB-BID REQUIREMENTS

A. This Section is part of the filed sub-bid for Division 14 – Elevators. See Division 14 Conveying Equipment.

1.02 SUMMARY

A. The Elevator Subcontractor shall provide all labor, materials, equipment and incidentals as shown, specified and required to furnish, install and place into satisfactory service a custom electric traction passenger elevator with a separate machinery room.

B. Section Includes:

1. The work required under this section consists of all labor, materials and services required for the complete installation (including operational verification) of all the equipment required for the elevator(s) as herein specified.

2. All work shall be performed in a first class, OSHA compliant and workmanlike manner.

3. In all cases where a device or part of the equipment is herein referred to in the singular, it is intended that such reference shall apply to as many of such devices or parts as are required to make complete installation.

1.03 PAYMENT

A. There is no separate payment provision for this Section.

1.04 RELATED SECTIONS

A. Division 00 – Procurement and Contracting Requirements

B. Division 01 – General Requirements

---

[1] Addendum No.5

C. Section 03 30 00 – Cast-in-Place Concrete

D. Section 04 22 23.23 – Prefaced Concrete Unit Masonry

E. Section 05 50 00 – Metal Fabrications

F. Section 07 13 54 – Thermoplastic Sheet Waterproofing

G. Section 09 30 00 – Tiling

H. Section 22 14 29 – Sump Pumps

I. Division 23 – HVAC: ventilation and temperature control of elevator equipment areas.

J. Division 26 – Electrical:

1. Main disconnects for each elevator.

2. Electrical power for elevator installation and testing.

3. Disconnecting device to elevator equipment prior to activation of sprinkler system.

4. The installation of dedicated GFCI receptables in the pit and top of cab.

5. Lighting in controller area, machine area overhead, and pit.

6. Wiring for telephone service to controller.

K. Section 26 33 53 – Static Uninterruptable Power Supply

L. Section 27 32 30 – Telephone Systems

M. Section 28 46 20 – Fire Alarm Systems

N. Section 31 23 16 – Excavation

O. Division 40 – Process Interconnections

1.05 REFERENCES

A. MSBC - Massachusetts State Building Code

B. MEEC – Massachusetts Elevator and Escalator Code

C. MAAB - Massachusetts Accessibility Code 521 CMR: Architectural Access Board

D. ADAAG - Americans with Disabilities Act Accessibility Guidelines

E. ANSI A117.1 - Buildings and Facilities, Providing Accessibility and Usability for Physically Handicapped People

F. ANSI/NFPA 70 - National Electrical Code

G. ANSI/NFPA 80 – Standard for Fire Doors and Other Opening Protectives

H. ANSI/UL 10B – Standard for Fire Tests of Door Assemblies

I. ASME A17.1/CSA B44 – Safety Code for Elevators and Escalators

J. ASME A17.7/CSA B44 – Performance-Based Safety Code for Elevators and Escalators

K. All electrical controls, motor starters, conduits, wiring, relays, push-button station and interconnections for the custom electric traction passenger elevator. All electrical work included under this Section shall conform to the applicable requirements of Division 16 of this contract NEC, NEMA and ASME/ANSI A17.1 including applicable supplements and the latest edition of the Massachusetts State Building Code.

1.06 DESCRIPTION

A. Machine Room-Less Electric Traction Elevator where all components fit inside the hoistway: Provide the following performance features, finishes, equipment and appurtenances in order to provide a complete system conforming to the requirements of the Massachusetts State Building Code Chapter 30, the National Electrical Code and all governing authorities having jurisdiction at the Project Site.

1. Drive: Regenerative

2. Number of Elevators Required:One (1)

3. Capacity in Pounds: 5,000

4. Speed in FPM at Full Load (Up): 150

5. Car Inside Size (Width by Depth): 5 feet-11 5/16 inches by 8 feet-4 3/4 inches

6. Door Type/Size:Two Speed Side Slide 54-inches wide by -inches high: interior doors are 1½ hour fire rated.

7. Clear Hoistway Size (Width by Depth): 8 feet-2 inches by 10 feet-10 inches

8. Pit Depth: 5 feet-0 inches

9. Overhead: 12 feet-11 inches

10. Clear Cab Height: 7 feet-9 inches

11. Travel Distance: 28 feet-0 inches

12. Number of Stops: Three (3)

13. Openings: Front and Rear

14. Elevator Stop Designations: One (1) rear opening at lower level. One (1) front opening at mid level. One (1) front opening at top level.

15. Entrance Type and Width: Side slide doors 54 inches

16. Entrance Height: 7-feet 0-inches

17. Main Power Supply: 480V 3-phase with a separate equipment grounding conductor.

18. Car Lighting Power Supply: 120V Single-phase, 15 Amp, 60 Hz.

19. Machine Location: Inside and at the top of the hoistway.

20. Controller Location: Machine Room-less controllers must be in the front wall on the same side as the counterweight, located at the top landing.

21. Performance:

    a. Car Speed: +/- 3 % of contract speed under any loading condition or direction of travel.

    b. Car Capacity: Safely lower, stop and hold up to 120% of rated load.

22. Ride Quality:

    a. Vertical Vibration (maximum): 20 milli-g

    b. Horizontal Vibration (maximum): 12 milli-g

    c. Vertical Jerk (maximum): 4.59 +/- 1.0 ft./ sec3 (1.4 +/- 0.3 m/ sec3)

    d. Acceleration/Deceleration (maximum): 2.62 ft./ sec2 (0.8 m/ sec2)

    e. In Car Noise: 55 – 60 dB(A)

    f. Stopping Accuracy: +/- 0.375 in. (+/- 10 mm) max, +/- 0.25 in. (+/- 6 mm) Typical

    g. Re-leveling Distance: +/- 0.5 in. (+/- 12 mm)

B. Operation: Simplex Collective Operation. Using a microprocessor-based controller, operation shall be automatic by means of the car and hall buttons. If all calls in the system have been answered, the car shall park at the last landing served.

C. Operating Features:

1. Full Collective Operation

2. Anti-nuisance.

3. Fan and Light Protection.

4. Load Weighing Bypass.

5. Independent Service.

6. Firefighters' Service Phase I and Phase II

7. Top of Car Inspection.

8. Zoned Access and Bottom Landing.

9. Zoned Access and Top Landing.

10. Care Secure Access.

11. Automatic Rescue Operation.

D. Door Control Features;

1. Door control to open doors automatically when car arrives at a landing in response to a normal hall or car call.

2. Elevator doors shall be provided with a reopening device that will stop and reopen the car door(s) and hoistway door(s) automatically should the door(s) become obstructed by an object or person.

3. Door protection shall consist of a two-dimensional, multi-beam array projecting across the car door opening.

4. Door nudging operation to occur if doors are prevented from closing for an adjustable period of time.

E. Provide equipment according to ASCE 7 Section 9, “Earthquake Loads.”

1.07 QUALITY ASSURANCE

A. Manufacturer shall be a company specializing in manufacturing the products specified in this section with a minimum of fifteen years documented experience.

B. Supplier’s Installer’s Qualifications:

1. The supplier/installer shall be a business regularly engaged and specialized in, installing and servicing equipment of the type and character required by these specifications and approved by the equipment manufacturer as certified to the

Engineer in writing at time of Working Drawing submission. Supplier/installer shall have at least five (5) years' experience.

C. The Elevator Subcontractor shall submit the following information pertaining to the Supplier/installer:

1. List of five (5) similar installations arranged to show name of project, elevator capacity speed, travel and date of completed installation. The five (5) installations shall be located within one hundred (100) miles of the site.

2. Complete literature, performance and technical data describing the proposed equipment and listing of items made by the manufacturer.

3. List of ten (10) service accounts by building name, building manager or owner within one hundred (100) miles of the site.

4. Location of closest service office from which this elevator will be serviced.

5. Location of closest parts inventory for this installation.

D. Elevator Mechanics Qualifications: Elevator mechanics employed to install, supervise and test the elevator shall be certified to have not less than two (2) years of experience installing, supervising and testing elevators of the type and rating specified.

E. Permits, Inspections and Certificates: The Elevator Subcontractor shall obtain and pay for necessary Municipal or State Inspection and permit as required by the elevator inspection authority, and make such tests as are called for by the regulations or such authorities. These tests shall be made in the presence of such authorities or their authorized representatives.

F. Motor Tests:

1. Electric motors shall be tested as required by Section 26 05 60, and as specified herein.

2. Each motor shall be given a routine test at the motor manufacturer's factory. The test shall consist of running light current, locked motor current, winding resistance, high potential, and bearing inspection. An inspection report indicating routine testing shall be submitted.

G. Elevator Subcontractor's and Manufacturer's Services: The manufacturer shall include the services of at least two (2) qualified factory trained representatives who shall provide the following services:

H. Construction Services: Supervise and assist as necessary in the installation of the equipment for a proper installation of the equipment included herein. The work of this section shall also include to ensure safe access and coordination of work performed by other trades to complete the work of elevator installation.

I. Inspection Services: Check the installation before it is placed into service and make all necessary adjustments to place the equipment into satisfactory service.

J. Acceptance Testing: Supervise the preliminary and final equipment and system field test work as specified herein including necessary adjustments. Additional acceptance testing supervision resulting from the failure to meet the specified performance requirements shall be at the manufacturer's expense. The instrumentation and controls shall specifically include the services of at least two (2) qualified factory trained representatives who shall provide the services specified above in addition to providing specific control system programming, adjustment and inspection.

K. Start-up Services and Training:

1. Equipment start-up and initial operating period shall begin after satisfactory completion and acceptance of the preliminary and final equipment and system field tests. Equipment start-up and initial operating period shall be complete when the manufacturer and the Engineer have mutually agreed that the equipment is in suitable condition for continuous operation. During the equipment start-up and initial operating period, the Elevator Subcontractor shall furnish the services of factory-trained specialists of the equipment manufacturers for the equipment included herein to:

a. Equipment start-up and operator training shall be completed in accordance with Section 01 75 00 – Checkout and Startup Procedures and Section 01 79 00 – Instruction of Owner's Personnel.

b. In order to provide training for an adequate number of Owner operation and maintenance personnel, each training shall be provided a minimum of two times for each shift during their shift (Day, Night, Evening) for a total of six training sessions to instruct the Owner operation and corrective and preventative maintenance procedures.

c. The qualifications of the specialists shall be submitted for approval a minimum of sixty (60) days prior to scheduled training. Training shall not proceed without approval by the Engineer of the specialists qualifications.

d. The Contractor shall be responsible for coordinating these services with the Engineer and the Owner. A minimum of fourteen (14) days before scheduled training written notice shall be given to the Engineer.

e. The Elevator Subcontractor shall provide a specialist for a minimum of three (3) days to meet with the Engineer to prepare training scripts and participate in video taping of training.

f. As part of these services, the Owner will provide the necessary plant personnel for training in the operation and maintenance of the equipment. The Owner's personnel shall operate all equipment.

g. Assist in the start-up and operations of the equipment.

2. Training Aids:

a. The manufacturer's instructions shall incorporate training aids as appropriate to assist in the instruction. At a minimum, the training aids shall include text and figure handouts. Other appropriate training aids are:

b. Audio-Visual aids (e.g., films, slides, videotapes, overhead transparencies, posters, blueprints, diagrams, catalogue sheets).

c. Equipment cutaways and samples (e.g. spare parts, damaged equipment).

d. Tools (e.g. repair tools, customized tools, measuring and calibrating instruments).

e. The manufacturer's instructions shall utilize descriptive class handouts during the instruction. Photocopied class handouts shall be good quality reproductions. Class handouts shall accompany the instruction with frequent reference made to them. Customized handouts developed especially for the instruction are encouraged. Handouts planned for the instruction shall be attached with the manufacturer Training Lesson Plan.

3. "Hands-On" Demonstrations:

a. The manufacturer, in conjunction with the Engineer, shall select a minimum of four (4) 'hands-on' demonstrations of maintenance repairs. The manufacturer's instructions shall present the 'hands-on' demonstrations of common corrective maintenance repairs, two (2) involving mechanical repairs and two (2) involving electrical repairs. The manufacturer shall provide the tools and equipment to conduct the demonstrations. Requests for supplemental assistance and facilities should be submitted with the manufacturer's Lesson Plan. The proposed 'hands-on" demonstrations shall be described in the manufacturer's Lesson Plan and shall be specific to equipment installed.

b. In any 'hands-on" training situation where the Owner's operations or maintenance personnel participate in disassembly or assembly of equipment components, the manufacturer shall be responsible for such disassembly or assembly and shall provide written certification of proper equipment operation to the Engineer.

4. The Contractor shall coordinate these services with the Engineer, the manufacturer and the Owner except as indicated otherwise.

5. The cost for all such services shall be included in the lump sum price bid for this Contract.

6. The services of the manufacturer's representative shall be furnished for at least the number of days stipulated. Should additional days of services be necessary for a successful installation, such services shall be provided by the Elevator Subcontractor at no additional expense to the Owner.

7. The representative of the manufacturer shall report to the Resident Engineer who will record his name, his company and his time of arrival and departure for each occasion he is on the site.

L. Affidavit: The manufacturer shall submit an affidavit to the Owner that the equipment, apparatus or process it offers to furnish will meet in every way the performance requirements set forth in these Specifications.

M. Certificates and Test Reports:

1. Certificates: Submit fifteen (15) copies of certificates of compliance attesting to the equipment's (material's) compliance with the requirement of the specification.

2. Tests: Submit description of proposed testing methods, procedures and apparatus. Submit fifteen (15) copies of test reports including a description of the testing methods, computations, data sheets, graphs and results.

3. Submit copies of written, certified reports for required tests, recording the dates performed, test method (description), test results, interpretation of the results and recommended action. The test shall be conducted in such a manner as to ensure that the apparatus or equipment furnished will meet in every way the testing requirements set forth in these specifications.

4. Permits: The elevator subcontractor shall be responsible for all permits and filing fees that may be required by local authorities, including all filing procedures. The elevator subcontractor shall be responsible for filing all permits, schedules and inspections and shall obtain an operating certificate with as required by the elevator inspection authority, in conformance with ASME/ANSI A17.1 and the Massachusetts State Building Code.

1.08 SUBMITTALS

A. Each submittal shall be complete in all respects, incorporating all information and data listed herein and all additional information required for evaluation of the proposed materials and equipment compliance with the Contract Documents

B. Elevator Subcontractor shall submit Shop Drawings for approval prepared in accordance with Section 01 33 00 – Submittal Procedures. Submittals shall include, but not be limited to the following:

1. Product Data.

2. Shop Drawings.

3. Regulatory Requirements.

4. Operations and Maintenance Manuals.

C. Product Data: Submit manufacturer's product data for each system proposed for use. Include the following:

1. Signal and operating fixtures, operating panels and indicators.

2. Cab design, dimensions, and layout.

3. Hoistway-door and frame details.

4. Electrical characteristics and connection requirements.

5. Expected heat dissipation of elevator equipment in hoistway (BTU).

6. Color selection chart for Cab and Entrances.

7. The Engineer reserves the right to require samples showing fabrication techniques and workmanship of component parts, and the design of accessories and other auxiliary items for all elevator work, before fabrication of the Work proceeds.

D. Shop Drawings: Submit for approval complete layout and installation drawings with clearly marked dimensions. Include the following:

1. Car, guide rails, buffers, and other components in hoistway.

2. Maximum rail bracket spacing.

3. Maximum loads imposed on guide rails requiring load transfer to building structure.

4. Clearances and travel of car.

5. Clear inside hoistway and pit dimensions.

6. Location and sizes of access doors, hoistway entrances, and frames.

E. Regulatory Requirements:

1. The Elevator Subcontractor shall submit copies of written certified reports for required tests, recording the dates, tests performed, test method (description), test results, interpretation of the results and recommended action.

2. The Elevator Subcontractor shall provide certificates and operating permits to the Client and the Engineer for the elevator, obtained from governing authorities, as necessary for normal, unrestricted use of the elevator.

3. The Elevator Subcontractor shall submit elevator doors fire-resistance-rating certification to the Engineer confirming doors meeting the requirements of ANSI/UL 10B for 1 ½ hour fire rating for each interior door.

F. Operations and Maintenance Manuals: Provide manufacturer's standard operations and maintenance manual.

1.09 DELIVERY, STORAGE, AND HANDLING

A. Should the building or the site not be prepared to receive the elevator equipment at the agreed upon date, the Contractor will be responsible to provide a proper and suitable storage area on or off the premises.

B. Should the storage area be off-site and the equipment not yet delivered, then the elevator subcontractor, upon notification from the Contractor, will divert the elevator equipment to the storage area. If the equipment has already been delivered to the site, then the Contractor shall transport the elevator equipment to the storage area. The cost of elevator equipment taken to storage by either party, storage, and redeliver to the job site shall not be at the expense of the elevator subcontractor.

1.10 SPARE PARTS, SPECIAL TOOLS. AND SUPPLIES

A. Not Used.

1.11 SPECIAL WARRANTY PROVISIONS / GUARANTEE PERIODS

A. The elevator subcontractor’s acceptance is conditional on the understanding that their warranty covers defective material and workmanship. The warranty period shall not extend longer than one (1) year from the date of completion or acceptance thereof by beneficial use, whichever is earlier, of each elevator. The warranty excludes: ordinary wear and tear, improper use, vandalism, abuse, misuse, or neglect or any other causes beyond the control of the elevator subcontractor and this express warranty is in lieu of all other warranties, express or implied, including any warranty of merchantability or fitness for a particular purpose.

B. Maintenance and Service

1. Maintenance service consisting of regular examinations and adjustments of the elevator equipment shall be provided by the elevator subcontractor for a period of twelve (12) months after the elevator has been turned over for the Owner’s use. This service shall not be subcontracted but shall be performed by the elevator subcontractor. All work shall be performed by qualified employees during regular working hours of regular working days. This service shall not cover adjustments, repairs or replacement of parts due to negligence, misuse, abuse or accidents caused by persons other than the elevator subcontractor. Only genuine parts and supplies as used in the manufacture and installation of the original equipment shall be provided.

2. The Elevator Subcontractor shall provide, on a monthly basis, trained experts and equipment to examine, clean, adjust, lubricate and otherwise maintain the elevator in operation without defects or deterioration using all reasonable care to keep elevator in proper adjustment and in safe operating condition, in accordance with the requirements of governing authorities having jurisdiction. Lubricate all of those mechanical parts recommended to be lubricated by the original manufacturer of the elevator equipment. All oil reservoirs shall be kept properly sealed to prevent leakage. Lubrications, performed twelve times per year, shall be at regularly scheduled intervals coordinated with the Owner. All regular inspections and scheduled maintenance will be made during the regular business hours of the Elevator Subcontractor.

3. Each monthly inspection shall include all mechanical and electrical parts subject to loosening, wear or burn-out by reason of movement, contact or load, mechancal or electrical, and all machines, bearings, rotors, stators, armatures, power units, pumps, motors, valves, controller parts, piping, flanges, scavenger systems, cylinders pistons, coils and windings, commutator armatures, contacts, switches, relays, resistors, wiring of all circuits, magnet frames, packing, seals, gaskets, solenoids, floor leveling and safety devices, interlocks, cams, car door hangers and hall door hangers and rollers, guides, hall push buttons, car lights, signal devices, and conductor cables and other electrical and mechanical parts and telephone instruments. All safety devices, relief valves, conductor cables shall be calibrated and tested periodically, but not less than once a year.

4. Repairs, renewals and replacements shall be made by the Elevator Subcontractor as soon as monthly or other inspections reveal the necessity therefore, or when the Owner advices the Elevator Subontractor under the provisions of these Specifications, it being understood that repairs, renewals and replacements shall be made in accordance with high standards of preventive maintenance practice and that the repairs and renewals of parts made shall be equal in design, workmanship, quality, finish, fit, adjustment, operation and appearance to the original installation and that replacement parts shall be genuine parts as supplied by the manufacturer of the original elevator equipment, or its successor, and shall not be rebuilt or re-worked used parts. This requirement shall apply to the repair, renewal or replacement of all mechanical and electrical parts such as machine bearings, rotors, stators, armatures, power units, pumps, cylinders, pistons, controller parts, valves, flanges, packing, seals, belts, guide shoe gibs and roller guides, solenoids, coils and windings, commutators, contacts, switches, relays resistances, wiring of all circuits, magnet frames, piping, floor leveling and safety devices, interlocks, cams, car door and hall door hangers and roller guides, hall push buttons, car lights, and other electrical and mechanical parts, instruments, and communication devices.

5. The Elevator Subcontractor shall, upon notice from the Owner, remove all violations and comply with recommendations of governmental agencies or authorities having jurisdiction, or of the elevator insurance carrier of the Owner, for repairs or replacements, provided that no new attachments or equipment other or

different from that constituting that shown on approved Working Drawings are to be covered by this provision.

C. The Elevator Subcontractor shall supply all materials to replace or repair all items that become defective or deteriorated for any reason except through abuse or misuse. The cost for all repair, maintenance services, materials and replacement items shall be included in the Maintenance and Service Contract and shall be at no additional expense to the Owner.

D. Lubricants shall consist of oils, greases and compounds furnished by the Elevator Subcontractor and shall be of the type and quality recommended by the manufacturer of each elevator system component. All cleaning compounds, work cloths and all other materials shall be supplied by the Elevator Subcontractor. All waste from all service maintenance work shall be removed from the Site at the completion of each day's work and the Site shall be left in a clean and orderly condition.

E. The Elevator Subcontractor shall keep guide rails clean and properly lubricated, except when roller-type guides are involved. When necessary, the Elevator Subcontractor shall renew guide shoe gibs or rollers as required to insure smooth and quiet operation.

F. The Elevator Subcontractor shall promptly send qualified employees in response to emergency calls outside of regular business hours, when the equipment covered by this Contract has become inoperative. When necessary, immediate repairs shall be made to restore equipment to a safe operating condition. It is understood and agreed that this emergency maintenance service shall be available twenty-four (24) hours a day, seven (7) days a week, including holidays.

G. The elevator control system must:

1. Provide in the controller the necessary devices to run the elevator on inspection operation.

2. Provide on top of the car the necessary devices to run the elevator in inspection operation.

3. Provide in the controller an emergency stop switch. This emergency stop switch when opened disconnects power from the brake and prevents the motor from running.

4. Provide in the event of a power outage, means from the controller to electrically lift and control the elevator brake to safely bring the elevator to the nearest available landing.

5. Provide the means from the controller to reset the governor over speed switch and also trip the governor.

6. Provide the means from the controller to reset the emergency brake when set because of an unintended car movement or ascending car over speed.

7. Provide the means from the controller to reset elevator earthquake operation.

H. Provide system capabilities to enable a remote expert to create a live, interactive connection with the elevator system to enable the following functions:

1. Remotely diagnose elevator issues with a remote team of experts

2. Remotely return an elevator to service

3. Provide real-time status updates via email

4. Remotely make changes to selected elevator functions including:

a. Control building traffic: Restrict floor access, remove car from group operation, shut down elevator, select up peak/down peak mode, activate independent service

b. Conserve energy: Activate cab light energy save mode, activate fan energy save mode, shut down car(s)

c. Improve passenger experience**:** Extend door open times, change parking floor, activate auto car full, activate anti-nuisance, advance door opening, door nudging, extend specific floor extended opening time, release trapped passengers

PART 2 – PRODUCTS

2.01 MANUFACTURERS

A. Otis Elevator Company, One Penn Plaza, 250 West 34th St., Suite 600, New York, NY 10119; Tel: (917) 339-9672

B. Schindler, 12 East 49th Street, 14th Floor, New York, NY 10017; Tel: (212) 708-1000

C. Thyssen Krupp Elevator, Executive Boulevard, #135, Elmsford, NY 10523; Tel: (914) 345-5354

2.02 MATERIALS / EQUIPMENT

A. Provide machine-roomless electric traction passenger elevator, control system, and car design based on materials and systems for a single manufacturer. Specifically, the system shall consist of but not be limited to the following components:

1. Controller located entirely inside the hoistway. No extra machine room or control closet space required.

2. An AC gearless machine using embedded permanent magnets mounted at the top of the hoistway.

3. Polyurethane Coated-Steel Belts for elevator hoisting purposes.

4. Regenerative drive that captures normally wasted energy and feeds clean power back into the building's power grid.

5. Flush (4) four LED lighted ceiling lights and elevator fixtures.

6. Sleep mode operation for LED ceiling lights and car fan.

B. Controller: A microcomputer based control system shall be provided to perform all of the functions of safe elevator operation and shall comply with ANSI/ASME A17.1 safety code. The system shall provide the means to access the computer memory for elevator diagnostic purposes and shall have permanent indicators as an integral part of the controller to indicate important elevator statuses. The system shall also perform car and group operational control.

1. All high voltage (110V or above) contact points inside the controller shall be protected from accidental contact when the controller doors are open.

2. Controller shall be separated into two distinct halves; Motor Drive side and Control side. High voltage motor power conductors shall be routed so as to be physically segregated from the rest of the controller.

3. Field conductor terminations points shall be segregated; high voltage (>30 volts DC and 110 VAC,) and low voltage (< 30 volts DC)

4. Controllers shall be designed and tested for Electromagnetic Interference (EMI) immunity according to the EN 12016 (May 1998): "EMC Product Family Standards for lifts, escalators, and passenger conveyors Part 2 – immunity"

5. Controller located inside the wall next to the top landing entrance frame. Emergency access shall be provided through an access panel in the entrance frame secured by a key lock.

6. Drive: A Variable Voltage Variable Frequency AC drive system shall be provided. The drive shall be set up for regeneration of AC power back to the building grid.

7. Emergency Power System: The emergency power system shall be furnished and installed in accordance with the requirements of this specification.

C. Hoistway Components:

1. Machine: AC gearless machine, with a synchronous permanent-magnet motor, dual solenoid service and emergency disc brakes, mounted at the top of the hoistway.

2. Governor: The governor shall be a tension type car-mounted governor.

3. Buffers, Car, and Counterweight: Polyurethane type buffers shall be used for speeds of 150 and 200 feet per minute. Oil buffers shall be used for a speed of 350 feet per minute.

4. Hoistway Operating Devices:

    a. Emergency stop switch in the pit.

    b. Terminal stopping switches.

5. Positioning System: Consists of an encoder, reader box, and door zone vanes.

6. Guide Rails and Attachments: Guide rails shall be Tee-section steel rails with brackets and fasteners. Side counterweight arrangements shall have a dual-purpose bracket that combines both counterweight guide rails, and one of the car guide rails to building fastening.

7. Coated-Steel Belts: Polyurethane coated belts with high-tensile-grade, zinc-plated steel cords and a flat profile on the running surface and the backside of the belt. The belts shall have an FT-1 rating as referenced by NFPA 13. All driving sheaves and deflector sheaves should have a crowned profile to ensure center tracking of the belts. A continuous 24/7 monitoring system using resistance based technology has to be installed to continuously monitor the integrity of the coated-steel belts and provide advanced notice of belt wear.

8. Governor Rope: The Governor rope shall be steel and shall consist of at least eight strands wound about a sisal core center.

9. Fascia: Galvanized sheet steel shall be provided at the front of the hoistway.

10. Hoistway Entrances:

    a. Frames: Entrance frames shall be of bolted construction for complete one-piece unit assembly. All frames shall be securely fastened to fixing angles mounted in the hoistway and shall be of UL fire rated steel.

    b. Sills: Nickel-alloy type for full width of door frames.

    c. Doors: Entrance doors shall be of metal construction with vertical channel reinforcements.

    d. Fire Rating: Entrance and doors shall be UL fire rated for 1-1/2 hour.

    e. Frame and Entrance Finishes: Brushed stainless steel

    f. Entrance Marking Plates: Entrance jambs shall be marked with 4” x 4” (102 mm x 102 mm) plates having raised floor markings with Braille located adjacent to the floor marking. Marking plates shall be provided on both sides of the entrance.

g. Sight Guards: Sight guards will be furnished with all doors painted to match with painted doors, painted black for stainless steel doors.

D. Car Components:

1. Car Frame and Safety: A car frame fabricated from formed or structural steel members shall be provided with adequate bracing to support the platform and car enclosures. The car safety shall be integral to the car frame and shall be Type "B", flexible guide clamp type.

2. Cab: Premium, Steel Shell Cab with raised patterned-stainless steel wall panels. Brushed Stainless Steel finished base plate located at top and bottom.

3. Car Front Finish: Satin Stainless Steel

4. Car Door Finish: Satin Stainless Steel

5. Ceiling Type: Flat ceiling with recessed LED downlights.

6. Ceiling Finish: Satin Stainless Steel

7. Emergency Car Lighting: An emergency power unit employing a 6-volt sealed rechargeable battery and totally static circuits shall be provided to illuminate the elevator car in the event of building power failure.

8. Fan: A two-speed 120 VAC fan will be mounted to the ceiling to facilitate in-car air circulation, meeting A17.1 code requirements. The fan shall be rubber mounted to prevent the transmission of structural vibration and will include a baffle to diffuse audible noise. A switch shall be provided in the car-operating panel to control the fan.

9. Handrail: Handrails shall be provided on the side walls of the car enclosure. Handrails shall be 3/8” x 2” (9.5 mm x 51 mm) flat tubular handrail with ANSI brushed number 4 stainless steel.

10. Threshold: Nickel-Silver finish

11. Emergency Exit Contact: An electrical contact shall be provided on the car-top exit.

12. Guides: The car shall have 3” diameter roller guides at top and bottom and the counterweight shall have slide type guides at the top and the bottom.

13. Platform: The car platform shall be constructed of metal. Load weighing device shall be mounted on the belts at the top of the hoistway.

14. Floor: Recessed 1 ¼-inch to receive type A4 concrete, thin set bed with porcelain tile. Refer to Specification Section 09 31 13 – Thin Set Porcelain Tile for tile to be installed at elevator cab floor.

15. The LED ceiling lights and the fan should automatically shut off when the system is not in use and be powered back up after a passenger calls the elevator and pushes a hall button.

16. Provide light and G.F.C.I outlet at shaft exposed top of cab for service requirements as part of work of this section.

17. Certificate Frame: Provide a Certificate frame with a satin stainless steel finish.

E. Signal Devices and Fixtures:

1. Car Operating Panel: A car operating panel shall be provided which contains all push buttons, key switches, and message indicators for elevator operation. The car operating panel shall have a satin stainless steel finish and shall contain a bank of round stainless steel, mechanical LED illuminated buttons. Flush mounted to the panel and marked to correspond to the landings served. All buttons to have raised numerals and Braille markings. The car operating panel shall be equipped with the following features:

    a. Raised markings and Braille to the left-hand side of each push-button inclusive of door open and door close buttons.

    b. Signal Fixtures: Manufacturer's metal vandal-resistant buttons, LED illuminated in blue, flush mount in satin stainless steel button targets.

    c. In-car Lantern: LED illuminated.

    d. Cab Swing Return Car Operation Panel: Metal micro-motion push buttons, blue LCD display, service cabinet in satin stainless steel.

    e. Elevator Data Plate marked with elevator capacity and car number.

    f. Help Button: The help button shall initiate two-way communication between the car and a location inside the building, switching over to another location if the call is unanswered, where personnel are available who can take the appropriate action.

    g. Visual indicators are provided for call initiation and call acknowledgement.

    h. Landing Passing Signal: A chime bell shall sound in the car to signal that the car is either stopping at or passing a floor served by the elevator.

    i. Firefighter's hat.

    j. Firefighter's Phase I and Phase II Key-switch.

    k. Call Cancel Button.

l. Firefighter's Phase II Emergency In-Car Operating Instructions: worded according to A17.1 2000, Article 2.27.7.2.

m. Emergency Elevator Two Way Communication System Emergency two way-communication capable phone for the deaf, hard of hearing and speech impaired with cat 6 cable and a second backup Cat6 cable with interconnection of IP Based phone system. Refer to Divisions 40 for cable and IP service requirements.

n. Car Position Indicator: A digital, LED Car Position Indicator shall be at the top of and integral to the car operating panel.

2. Hall Fixtures: Integral Hall fixtures shall feature round stainless steel, mechanical buttons marked to correspond to the landings. Hall fixtures to be located in the entrance jambs. Buttons shall be in vertically mounted fixture. Fixture shall be satin stainless steel. The following Button Options shall be included for the work of this section:

a. Hall Fixture: Hall Position indicator-LCD Satin stainless steel.

b. Hall Button: LED illuminated in blue in satin stainless steel, jamb mounted.

3. Car Lantern and Chime: A directional lantern visible from the corridor shall be provided in the car entrance. When the car stops and the doors are opening, the lantern shall indicate the direction in which the car is to travel and a chime will sound. In Car Lantern shall be LED illuminated in blue.

4. Access key-switch in entrance jamb and top floor and lowest floor.

F. Firefighter's Service:

1. Phase 1 Emergency Recall Operation: A two (2) position, key operated switch shall be provided at grade level for the elevator. The two (2) position switch shall be marked 'NORMAL' and 'FIREMEN SERVICE'. The two (2) position switch shall be located in the lobby call button fixture and shall not be located behind the locked door or cover. All keys shall be removable from any position. No device, other than the Phase I switch or the smoke detectors in the elevator lobbies, machine room or hoistway shall initiate Phase I operation. Normal elevator service shall be provided when the Phase I switch is in the 'NORMAL' position. When the switch is in the 'FIREMEN SERVICE' position, the car shall function as required by Authority of Jurisdiction Fire Code requirements.

2. Phase II Emergency in Car Operations: A three position ('NORMAL', 'HOLD' and 'FIREMAN SERVICE', in that order) key operated switch shall be provided in one of the operating panels in the car. It shall become effective only when the designated level Phase I switch is in the 'FIREMEN SERVICE' position or a smoke detector has been activated, and the car has returned to the designated level by Phase I operation. The key shall be removable in the 'NORMAL', or 'HOLD'

positions. The ‘NORMAL’, ‘HOLD’ and ‘FIREMEN SERVICE’ positions shall not change the operation until the car is at a landing with the doors in the normal open position.

3. Call buttons 3/4-inch high minimum 3/8-inch maximum recess when depressed, corresponding to each floor served.

G. Alarm Bells: An alarm system shall be furnished and installed. One alarm bell shall be mounted on the elevator car and one shall be mounted outside of the hoistway in accordance with ANSI/ASME A17.1. Alarm bells shall meet NEMA 4X standard. Bells shall produce a minimum 90db at 10 feet from the bell.

H. Wiring and Conduit:

1. Provide wire and conduit from 120 volt, single-phase lighting circuit breaker at elevator controller and elevator car. Provide wire and conduit and completely connect for proper operation: cab lights, cab fan and car alarm.

2. Terminal stopping devices shall be provided and mounted in the hoistway. The devices shall be totally enclosed, corrosion resistant and waterproof meeting the NEMA 4X standard. Stopping devices shall be arranged to slow down and stop the car automatically, at or near the top and bottom terminal landings, with any load up to and including rated load in the car.

3. Provide a duplex receptacle rated at not less than 15 amps, 120 volt in the machine room, overhead, pit and machinery space. Receptacles shall be G.F.C.I type.

I. Standby Power:

1. Elevators shall be provided with a standby (emergency) power source on the elevator conforming to the following:

a. The standby (emergency) power source shall be activated automatically upon loss of primary power.

b. The standby (emergency) power source shall enable the elevator cab to ascend to the elevator lobby and open the doors upon arrival.

2. Elevators shall be provided with a standby (emergency) lighting power source on each elevator conforming to the following:

a. The standby system shall provide some general illumination in the car. The intensity of illumination four (4) feet above the car floor approximately one (1) foot in front of the car operating device shall be not less than 0.2 foot candles (2.2 lux). Lights shall be automatically turned on in all elevators in service immediately after normal car lighting power fails. The power system

shall be capable of maintaining the above light intensity for a period of at least four (4) hours.

b. Not less than two (2) lamps of the six (6) LED lights of approximately equal wattage shall be used.

c. All emergency lighting components shall be corrosion resistant and waterproof.

d. The audible (alarm) signaling device and the telephone shall automatically transfer to a source of standby (emergency) power within ten (10) seconds after the normal power supply fails. The power source shall be capable of providing for the operation of the audible (alarm) signaling device for at least one (1) hours, and the means of two-way conversation for at least four (4) hours.

J. Loading Class Sign: One inch high black filled letters shall read: “LOADING. THIS ELEVATOR DESIGNED TO TRANSPORT A MAXIMUM COMBINED WEIGHT OF PERSONNEL NOT TO EXCEED 5,000 POUNDS”.

K. Capacity Lifting One-Piece Loads Sign: One inch high black filled letters shall read: “CAPACITY LIFTING ONE-PIECE LOADS NOT TO EXCEED 1,250 POUNDS”.

L. Provisions for Physically Challenged:

1. This elevator shall be classified as an elevator designed to carry passengers. Provisions for physically challenged people shall be provided and shall be in conformance with ANSI A117.1 and the Massachusetts State Building Code.

2. Indicators shall be provided near controls in conformance with ANSI A117.1.

3. Landing buttons shall be provided with indicators required by ANSI A117.1.

4. The highest button in the elevator cab control panel and the center of the telephone handset shall be located not more than 54 inches above the floor.

5. An audible tone signal shall sound in the car when the car is stopping at a floor or passing a floor.

6. Audible tone signals shall be included with illuminated landing indicators; once for UP stops, and twice for DOWN stops.

7. In the cab, grade two Braille numerals shall be provided immediately to the left of each floor button to identify each floor.

8. At each floor, two-inch high numerals, raised 0.03 inch, shall be provided on each door jamb and include grade two Braille. The numeral plates shall be attached with rivets and shall be brushed finish stainless steel on a black background. The floor

numbers shall be at a height of sixty (60) inches from the finished floor to the center of the numeral.

9. All hoistway doors and car gates shall be protected by infrared curtain units, so that a closing car gate will automatically stop and reopen whenever a person or object crosses the threshold. Hoistway doors shall not start to close until the car gate is fully closed.

10. Elevator floor levels shall stop within ¼ inch maximum of building floor levels.

M. Elevator Pit Features:

1. Pit Sump Pump: Sump pump shall be provided in conformance with section 22 14 29 – Sump Pumps. The installation of All plumbing and electrical work shall be performed in compliance with applicable Building Code Requirements. The sump shall be installed in the lowest section of the elevator pit. And the Contractor shall clean the elevator shaft floor free of all existing debris and oil. The sump location shall not interfere with the operation or maintenance of the elevator. A grating shall be provided over the opening and shall be set flush with the adjoining slab. Provide all miscellaneous accessories to secure grating and sump pump into position.

2. Ladder shall be at least 16-inches wide. Coordinate pit depth with elevator manufacturer supplied for compliance with ANSI A17.1. Pit light, convenience outlet and switch are provided by others.

3. All pit wiring below the level of the main floor door but including the wiring for the pit stop switch, shall be installed in liquid tight conduit. The pit stop switch shall be the liquid tight lever operated type.

2.03 FABRICATION / ASSEMBLING / FINISHES

A. Cab finish materials shall be manufacture's highest gauge available of Type 304 stainless steel with finish for all walls, doors, ceiling panels and all other finish components of the electric elevator system.

B. Provide corner mirrors at both ends of cab.

C. Provide custom sized protective pads and pad buttons for all cab wall surfaces.

2.04 SOURCE QUALITY CONTROL / SHOP TESTS

A. Not Used.

PART 3 – EXECUTION

3.01 EXAMINATION / PREPARATION

A. Elevator Subontractor shall take field dimensions and examine conditions of substrates, supports, and other conditions under which this work is to be performed and notify Contractor and Engineer in writing of unsatisfactory conditions. Do not proceed with the elevator work until unsatisfactory conditions have been corrected in a manner acceptable to Engineer.

B. Elevator work shall not be installed when there is no assurance of adequate, long-term protection by the Contractor. All erected work shall be completely protected and encased with sustainably verified lumber.

3.02 INSTALLATION

A. All materials shall be installed by approved installers in strict accordance with installation data provided by approved Working Drawing submittal, and these Specifications.

B. Services not used directly in connection with the elevator shall be kept outside of the elevator hoistway and machine room. Main feeders for supplying power to the elevator shall be installed outside of the hoistway.

C. All communications systems, control systems and safety systems in addition to hall buttons and other electrical service tie-in between the General Contract and Electrical Contract shall be provided and coordinated by the Contractor, for full system operation.

D. Do not install component parts that are observed to be defective in any way, including warped, bowed, dented, abraded and broken members, including glass with edge damage.

E. Do not cut or trim component parts during erection in a manner that would damage the finish, decrease the strength, or result in a visual imperfection or a failure in performance of the elevator. Return component parts which require alteration to the shop for replacement with new parts.

3.03 FIELD TESTING / QUALITY CONTROL

A. Field Tests:

1. The electric passenger elevator and its controls shall be field tested and the performance shall be to the full satisfaction of the Engineer. Tests shall demonstrate to the Engineer that each part and all parts together function in the manner intended. All necessary testing equipment and manpower shall be provided by the Elevator Subcontractor at his expense. Test shall include, but not be limited to, the following:

a. Full Load Test: The elevator shall be subject to a test for a period of one half hour continuous run, with a full specified rated load in the car. During the test run, the car shall be stopped at all floors in both directions of travel for a standing period of ten (10) seconds per floor.

b. Speed Test: The actual speed of the elevator car shall be determined in both directions of travel and with full contact load and with no load in the elevator.

2. The Owner will furnish all power required for the tests. A qualified factory trained operating supervisor and all necessary miscellaneous equipment required to perform the test shall be provided by the manufacturer.

3. The date of acceptance for equipment furnished under this Contract shall be the day after completion of the successful test or retest(s).

4. In the event that the manufacturer is unable to demonstrate to the Engineer that his equipment meets the test requirements described above, the deficient equipment shall be rejected and the Elevator Subcontractor shall adjust and/or modify and retest the equipment as often as necessary to meet the specified requirements.

3.04 STARTUP / DEMONSTRATION

A. The elevator subcontractor shall make a final check of each elevator operation with the Owner or Owner's representative present prior to turning each elevator over for use. The elevator subcontractor shall determine that control systems and operating devices are functioning properly.

3.05 ADJUSTING / PROTECTION / CLEANUP

A. Maintain elevator in a clean condition throughout the construction period, so that it will be without any evidence of deterioration or damage at the time of Substantial Completion. Select methods of cleaning that will promote the achievement of uniform appearance and stabilized colors and textures for materials that weather or age with exposure.

B. Protect the elevator during the remainder of the construction period, including loss.

C. Elevator materials or equipment that do not comply with requirements or have been damaged beyond successful repair, shall be removed and replaced with new material or equipment.

D. Immediately before the time of Substantial Completion clean the elevator, thoroughly, inside and out. Demonstrate proper cleaning methods to the Owner's maintenance personnel during this final cleaning.

E. At the completion of the work, clean or replace adjacent work, marred by the work of this Section.

F. Remove all materials and debris and leave the site of the work in clean condition.

END OF SECTION

NO TEXT ON THIS PAGE

ATTACHMENT R – 21 13 19 PREACTION SPRINKLER SYSTEM

DIVISION 21

FIRE SUPPRESSION

(Filed Sub Bid Required)

SECTION 21 13 19
PREACTION SPRINKLER SYSTEMS[1]

PART 1 – GENERAL

1.01 FILED SUB-BID REQUIREMENTS

A. This Section is part of the filed sub-bid for Division 21 – Fire Suppression. See Section 21 05 00.

1.02 SUMMARY

A. Related Documents:

1. Drawings and general provisions of the Subcontract apply to this Section.

2. Review these documents for coordination with additional requirements and information that apply to work under this Section.

B. Section Includes:

1. This specification details the requirements for an engineered fire suppression system. These requirements combined with good engineering practices must be followed in order to produce a safe and effective fire protection and suppression system.

2. Components furnished under this section include:

a. Preaction cabinet containing preaction valve, nitrogen generator, compressor, receiver, control panel and all appurtenances of the preaction system.

b. Preaction system control panel and all associated instrumentation.

3. Preaction system sprinkler piping, heads, and all appurtenances for the space served shall be provided in accordance with the relevant sections in 21 13 13 – Wet Pipe Sprinklers.

---

[1] Addendum No.5

1.03 RELATED SECTIONS:

A. Section 00 72 00 – General Conditions.

B. Section 00 73 00 – Supplementary Conditions.

C. Section 01 33 00 – Submittal Procedures

D. Section 01 73 23 - Anchorage and Bracing of Nonstructural Components

E. Division 03 Concrete.

F. Section 07 84 00 - Firestopping.

G. Section 07 90 00 - Joint Fillers, Sealants and Caulking.

H. Section 09 91 00 – Painting

I. Section 21 05 53 - Identification for Fire Protection and Life Safety System Equipment

J. Section 21 13 13 – Wet Pipe Sprinklers

K. Division 28 46 20 - Fire Alarm Systems

1.04 REFERENCES

A. American National Standards Institute (ANSI)

1. ANSI B1.20.1 - Pipe Threads, General Purpose, Inch, 2018 Revision

B. ASME International (ASME)

1. ASME B16.1 – Gray Iron Pipe Flanges and Flanged Fittings Classes 25, 125, and 250

2. ASME B16.11 – Forged Fittings, Socket-Welding and Threaded

3. ASME B16.3 – (2011) Malleable Iron Threaded Fittings, Classes 150 and 300

4. ASME B16.4 – (2011) Standard for Gray Iron Threaded Fittings; Classes 125 and 250

5. ASME B16.9 – (2012) Standard for Factory-Made Wrought Steel Buttwelding Fittings

6. ASME B18.2.2 – (2010) Nuts for General Applications: Machine Screw Nuts, Hex, Square, Hex Flange, and Coupling Nuts (Inch Series)

C. ASTM International (ASTM)

1. ASTM A135/A135M – Standard Specification for Electric-Resistance-Welded Steel Pipe

2. ASTM A183 – Standard Specification for Carbon Steel Track Bolts and Nuts

3. ASTM A53/A53M – Standard Specification for Pipe, Steel, Black and Hot-Dipped, Zinc-Coated, Welded and Seamless

4. ASTM A536 – Standard Specification for Ductile Iron Castings

5. ASTM A563 – Standard Specification for Carbon and Alloy Steel Nuts

6. ASTM A795/A795M – Standard Specification for Black and Hot-Dipped Zinc-Coated (Galvanized) Welded and Seamless Steel Pipe for Fire Protection Use

D. National Fire Protection Association (NFPA)

1. NFPA 70 – National Electrical Code (NEC), 2023 Edition

2. NFPA 72 – National Fire Alarm and Signaling Code, 2019 Edition

3. NFPA 75 – Standard for the Fire Protection of Information Technology Equipment, 2020 Edition

4. NFPA 76 – Standard for the Fire Protection of Telecommunications Facilities, 2020 Edition.

5. NFPA 101 – Life Safety Code, 2021 Edition

E. Underwriters Laboratories (UL)

1. UL Bld Mat Dir – Building Materials Directory

2. UL Fire Prot Dir – Fire Protection Equipment Directory

1.05 SYSTEM DESCRIPTION

A. The cabinet assembly of the preaction system shall contain a preaction double interlock system with Electric/Pneumatic release system, integral N2 generator and compressor, receiver, and all required valves, devices and appurtenances. The cabinet shall be pre-assembled, pre-wired and factory tested under ISO-9001 manufacturing and quality control procedures. All components shall UL or FM approved.

B. The preaction system shall be sized and capable of operation for a minimum system size of 500 gallons.

C. The complete system shall a minimum of one of the following listings and approvals:

1. Factory Mutual Global (FM)

2. Underwriters Laboratory (UL)

1.06 SUBMITTALS

A. The Designer will review all submittals for conformance to the drawings and specifications. The Contractor shall be required to resubmit any materials, with appropriate modifications, that are found to be in non-conformance with the requirements of the drawings and these specifications after review by the Designer. Approval of the submittals by the Designer shall not relieve the Contractor of their responsibility to meet the requirements of the drawings and specifications.

B. Fire Marshal approval is required for all fire protection equipment submittals. Submit the following in accordance with Section 01 33 00 – Submittal Procedures:

1. Engineered Design Drawings: The Contractor's NICET III or IV certified designer shall design the system and provide documents that shall include but are not limited to the following details:

a. Plan, elevation and isometric drawings showing the location, installation and mounting details of the cabinet, valves, nozzles and other accessories.

b. Design calculations for initial system charge time.

c. Dimensions, weights and loads of equipment assemblies, components, method of field assembly, clearance requirements, mounting and bracing practices, etc.

d. Field Device Layout

1) Show the locations of all smoke/heat detectors, pull stations, alarms etc.

2) Conduit routings shall be shown, with number of conductors, type of wire, and wire sizes indicated for each conduit segment.

3) Point-to-point wiring diagram showing the termination points for all field-wiring circuits to the control panel as well the building Fire Alarm Control Panel (FACP).

4) Any other requirements of NFPA 13 or NFPA 72.

e. Control Panel Battery Sizing Calculation

1) Sheets shall be in tabular form conforming to the requirements of NFPA 72.

2) Voltage drop calculations in tabular form. Calculations shall indicate circuit amperage draw, wire resistance, circuit length, and voltage

drop. The voltage drop shall demonstrate that the voltage provided at each appliance is within its operating voltage range. Voltage drop calculations shall assume an initial voltage of 20.4 volts.

2. Flow Calculation Report

    a. Customer information and project data

    b. The report shall contain detailed hydraulic calculations to demonstrate that the system has been designed in accordance with NFPA 13. The calculation shall bear the seal of the Professional Fire Protection Engineer or C-16 contractor license to perform such work in the state in which the project resides.

    c. Pipe network information shall include pipe type, pipe diameter, pipe length, change in elevation, pipe equivalent length and the equivalent length of any added accessory.

    d. Graphical presentation of the pipe network with plan, elevation and isometric view shall be part of the output printable reports.

    e. Nozzle information shall include the number of nozzles, flow rate per nozzle, nozzle nominal pipe size, nozzle type and nozzle orifice area.

    f. Pipe fittings information shall include a detailed list by nominal diameter and quantity.

3. Product Data

    a. Fire Protection Related Submittals

    b. Materials and Equipment

    c. Spare Parts

4. Sway Bracing Layout and Calculations (static and dynamic loads)

5. Maximum Sound Power Calculation

    a. Shall include sound induced by alarm sirens.

6. Test Reports

    a. All reports shall be prepared in accordance with manufacturer's requirements, and the requirements of any state or local requirements. Copies of each report shall be provided to the Designer, the Owner, the Fire Protection Engineer of Record and the AHJ.

b. Testing Plan

1) Includes relevant safety procedures to be observed during installation, servicing, maintenance, testing, handling, and start-up.

2) The Testing Plan shall include coordination items between the preaction system supplier and the HVAC system, as well as the fire alarm system. The Testing Plan (including system sequencing, and test scheduling) shall be coordinated with the installers and designers of those systems. Approval from the project Electrical Engineer and HVAC engineer shall be required.

c. Acceptance Test Report

1) The Acceptance Test Report shall include a signature or initial line, and date and time for each line item.

7. Certificates

a. Inspection by Fire Protection Engineer

b. Manufacturer’s Qualifications

c. Contractor’s Qualifications

d. Contractor's Material and Test Certificate for Aboveground Piping

8. The Contractor shall submit the following Installation drawings

a. Four (4) sets of installation drawings for each installed suppression system, one (1) set of the calculation report (if not included in the drawings themselves), owner’s manual and product data sheets shall be submitted to the end-user/owner.

b. Upon completion of installation and commissioning acceptance, two (2) sets of “As-Built” installation drawings and one (1) set of the calculation report for each installed system shall be submitted to the owner/end-user.

9. The Contractor shall submit the following Manuals after complete installation

a. Two (2) copies of the manufacturer’s Design, Installation, Operation and Maintenance Manual (DIOM), for the preaction system.

b. Two (2) sets of As-Built drawings with As-Built Flow Calculations reports.

1.07 QUALITY ASSURANCE

A. Compliance with referenced NFPA standards and all state and local Fire Code requirements is mandatory. For NFPA standards, this includes advisory provisions listed in the appendices of such standards, as though the word "shall" had been substituted for the word "should" wherever it appears. In the event of a conflict between specific provisions of this specification, State and Local Fire Codes, and applicable NFPA standards, the Fire Code shall govern followed by this specification. Reference to "authority having jurisdiction" shall be interpreted to mean the Fire Marshal.

B. Manufacturer

1. The manufacturer/supplier of the system hardware and components shall have a minimum of fifteen (15) years of experience in the design and manufacture of systems of similar type.

2. The manufacturer/supplier of the systems shall be certified to ISO 9001 for a minimum period of five (5) years for the design, production and distribution of fire detection, fire alarm and fire suppression systems.

3. The manufacturer/supplier name and /or part number shall appear on all major components.

4. All equipment shall be provided by the same manufacturer / supplier.

C. Contractor

1. The system shall be supplied and installed by a factory authorized distributor.

2. The Contractor shall be trained by the manufacturer to calculate/design, install, test and maintain the system and shall be able to produce a certificate stating such on request.

3. The Contractor shall employ a person who can show proficiency at least equal to a NICET level III or IV certification in special hazards design.

4. The Contractor shall confirm in writing that they stock a full complement of spare parts and offer 24-hour emergency service for all equipment being furnished.

D. All materials and equipment shall be new and unused. Recycled products shall not be acceptable

1.08 WARRANTY

A. The manufacturer shall warrant the system equipment for 36-months from the date of shipment from the factory.

B. The contractor will warrant the installation for 12-months from time of customer acceptance or commissioning.

1.09 DELIVERY, STORAGE, AND HANDLING

A. All equipment delivered and placed in storage shall be housed in a manner to preclude any damage from the weather, humidity and temperature variations, dirt and dust, or other contaminants. Additionally, all pipes shall either be capped or plugged until installed.

1.10 EXTRA MATERIALS

A. Submit spare parts data for each different item of material and equipment specified. The data shall include a complete list of parts and supplies, with current unit prices and source of supply, and a list of parts recommended by the manufacturer to be replaced after 1 year and 3 years of service. Include a list of special tools and test equipment required for maintenance and testing of the products supplied.

PART 2 – PRODUCTS

2.01 MANUFACTURERS

A. The packaged system shall be furnished by one of the following manufacturers:

1. FireFlex
2. Reliable
3. United Fire Systems
4. Or Equal

2.02 CABINET

A. The cabinet shall integrate a self-contained double interlock preaction system, electric release, and shall contain all hydraulic, pneumatic devices, nitrogen generation system, and electrical components required for the control of a self-contained preaction system.

B. The cabinet shall be free standing and constructed of 14 gauge steel. The cabinet shall be fully painted inside and out with an oven baked rustproof polyester powder coat with phosphate base.

C. The access door shall be lockable.

D. The cabinet shall have knock-outs for hydraulic and electrical connections. Field drilling shall be prohibited.

2.03 INTEGRATED PREACTION SYSTEM

A. The system shall contain a deluge valve with supervised butterfly control valve, releasing trim rated at 250 psi and all the necessary accessories. The trim shall include a mechanical latching device to prevent the system from resetting in case of loss of power to the release solenoid. Systems provided with solenoid only, without this mechanical latching device, shall not be accepted. Every valve shall be clearly identified as to its operation with arrows indicating all positions to facilitate system operation.

B. Pressure gauges shall be provided to indicate water supply, priming water, and air pressures of the system. Each pressure gauge must be provided with its own three-way valve.

C. Release trim with solenoid valve and every supervisory and alarm device require shall be schedule 40 galvanized steel. Black pipe shall not be acceptable.

D. Schedule 40 steel pipe header painted fire red

E. Schedule 40 steel pipe drain manifold of 2” diameter painted fire red.

F. Trim shall include properly identified contractor test ports factory mounted into the trim piping to facilitate system testing and commissioning.

G. The system shall have an integrated releasing circuit disconnect switch to allow the system to be tested without actuating the fire suppression system as required per NFPA 72. Operation of the disconnect switch shall cause a supervisory signal at the releasing service fire alarm control unit and transmitted to the Fire Alarm Control Panel. The disconnect switch shall be a physical switch and shall not be accomplished by using software.

H. The system shall have a listed and approved supervised butterfly valve installed on the system riser inside of the cabinet for full flow test purposes. An integrated sight glass shall be part of this arrangement for visually confirming water flow through the main drain upon system actuation.

2.04 NITROGEN GENERATION SYSTEM

A. The nitrogen generation system shall be capable of providing 98% pure nitrogen. The nitrogen shall be distributed through the entire sprinkler system in order to inhibit corrosion. The system shall contain a nitrogen generator, compressor, receiver, controller, and pneumatic appurtenances for operation of the system.

B. The nitrogen and compressor system shall be capable of charging the sprinkler system with nitrogen within 30 minutes per NFPA 13. The system shall contain a low air supervisory pressure switch for monitoring the nitrogen pressure at all times.

C. The nitrogen compressor shall have a factory adjusted on/off pressure switch, fast fill switch, compressor start counter, compressor run hours, output flow gauge, pressure monitoring controller and nitrogen reader port.

2.05 CONTROL PANEL

A. The control panel shall be fully integrated to the cabinet enclosure. It shall be pre-assembled, pre-wired, programmed, and tested at the factory. It shall be FM approved and UL listed to UL-864-9. The panel shall include four programmable Class B, Style B initiating zones, two class B supervisory zones, and four programmable output circuits. Onboard, menu driven programming with pre-installed programs for ease of set-up shall be provided.

B. The control panel shall include both an LCD annunciator and a set of yellow and red LED lamps identifying alarm, trouble, supervisory, and flow conditions.

C. Easy to operate control buttons shall be included for the operation of the panel functions.

D. The control panel shall contain batteries sized to provide 5 minutes of alarm after 24 hrs of stand-by time of emergency power as per UL requirements.

E. The Control Panel shall interface the building's Fire Alarm Control Panel to indicate activation of the preaction system and status of all supervisory signals. The preaction system supplier shall coordinate with the Fire Alarm Control Panel supplier for type and quantity of signals provided. The preaction system supplier shall include any options or accessories required for this communication.

2.06 AUTOMATIC DETECTION DEVICES

A. Supply and install a complete electrical detection system including conduit, wiring, heat and/or smoke detectors, flow detectors, pressure switches, manual pull stations, and connections to auxiliary functions. Supervisory signals shall be relayed to the Fire Alarm Control Panel of the facility.

B. Detection devices shall be furnished with signage to indicate the devices and their function.

2.07 CONTROL STRATEGY

A. Activation of the detection condition and the opening of an automatic sprinkler are necessary to cause the deluge valve actuation.

B. Detection condition:

1. Single Zone (operation of one detector in the protected area is required to fulfill the detection condition)

C. The activation of the detection condition alone shall activate the solenoid valve open, but water will not enter the system piping.

D. The opening of an automatic sprinkler or damage to the system piping without detection condition satisfied will activate the pneumatic actuator, and the low air supervisory switch but water will not enter the system piping.

E. Activation of the detection condition and the opening of an automatic sprinkler shall activate the solenoid valve open and the pneumatic actuator, causing the deluge valve to open, and water will flow out any open sprinklers. The alarm pressure switch shall activate.

F. Operation of the emergency manual release shall depressurize the priming chamber, causing the deluge valve to open and allowing water to enter the system piping and water shall discharge through any open sprinklers. The alarm pressure switch shall activate.

2.08 SYSTEM DRAIN

A. The cabinet shall have a single drain connection. The drain shall be connected to an open drain consisting of a vertical pipe with an air gap around the drain collector pipe.

B. The drain piping shall not be restricted or reduced and shall be of the same diameter as the drain collector.

C. Multiple drain collectors or open drain cups inside the cabinet are prohibited.

2.09 PIPE AND FITTINGS

A. Pipe and fittings shall be provided in accordance with relevant sections of 21 13 13 – Wet Pipe Sprinklers.

2.10 NOZZLES

A. Nozzles shall be provided in accordance with relevant sections of 21 13 13 – Wet Pipe Sprinklers.

PART 3 – EXECUTION

3.01 FIELD MEASUREMENTS

A. After becoming familiar with all details of the work, verify all dimensions in the field, and advise the Contracting Officer of any discrepancy before performing the work.

3.02 INSTALLATION REQUIREMENTS

A. The installation shall meet all State and Local laws and regulations. The installation shall be installed per the preaction system manufacturer's requirements.

B. The proper operation and coordination for the system installation are under the responsibility of the fire protection contractor.

3.03 INSPECTION BY FIRE PROTECTION ENGINEER

A. Prior to ceiling installation and concurrent with the Final Acceptance Test Report, certification by the Fire Protection Engineer that the preaction system is installed in accordance with the contract requirements, including signed approval of the Preliminary and Final Acceptance Test Reports. The Fire Protection Engineer shall: 1) inspect the preaction system periodically during the installation to assure that the system is being provided and installed in accordance with the contract requirements, 2) witness the preliminary and final tests, and sign the test results, 3) after completion of the system inspections and a successful final test, certify in writing that the system has been installed in accordance with the contract requirements. Any discrepancy shall be brought to the attention of the Contracting Officer in writing, no later than three working days after the discrepancy is discovered.

3.04 ABOVEGROUND PIPING INSTALLATION

A. Protection of Piping Against Earthquake Damage

1. Seismically protect the system piping against damage from earthquakes in accordance with NFPA 13. Provide zone of influence calculations for all bracing configurations that include both static and dynamic loading.

B. Piping in Exposed Areas

1. Install exposed piping without diminishing exit access widths, corridors or equipment access. Exposed horizontal piping, including drain piping, shall be installed to provide maximum headroom.

C. Piping in Finished Areas

1. In areas with suspended or dropped ceilings and in areas with concealed spaces above the ceiling, piping shall be concealed above ceilings. Piping shall be inspected, tested and approved before being concealed. Risers and similar vertical runs of piping in finished areas shall be concealed.

D. Pipe Penetrations

1. Cutting structural members for passage of pipes or for pipe-hanger fastenings will not be permitted. Pipes that must penetrate concrete or masonry walls or concrete floors shall be core-drilled and provided with pipe sleeves. Each sleeve shall be

Schedule 40 galvanized steel, ductile iron or cast iron pipe and shall extend through its respective wall or floor and be cut flush with each wall surface. Sleeves shall provide required clearance between the pipe and the sleeve per NFPA 13. The space between the sleeve and the pipe shall be firmly packed with mineral wool insulation. Where pipes penetrate fire walls, fire partitions, or floors, pipes shall be fire stopped in accordance with a UL Listed firestopping assembly to match the fire resistance rating of the assembly penetrated, and approved by the Fire Marshal. For penetrations that are not fire-rated or not a floor penetration, the space between the sleeve and the pipe shall be sealed at both ends with plastic waterproof cement that will dry to a firm but pliable mass or with a mechanically adjustable segmented elastomer seal.

E. Escutcheons

1. Escutcheons shall be provided for pipe penetration of ceilings and walls. Escutcheons shall be securely fastened to the pipe at surfaces through which piping passes.

F. Identification Signs

1. Signs shall be affixed to each control valve, test valve, auxiliary drain, test valve, and similar valves as appropriate or as required by NFPA or the Fire Code. Hydraulic design data nameplates shall be permanently affixed to each riser.

3.05 ELECTRICAL WORK

A. Alarm signal wiring connected to the building fire alarm control system shall be in accordance with Section 28 46 20 - Fire Alarm Systems. Wiring color code shall remain uniform throughout the system.

B. All electrical enclosures, raceways, and conduits shall be provided and installed in accordance with applicable codes and intended use and shall contain only those electrical circuits associated with the fire-detection and control system. No circuit or circuits that are unrelated to the fire alarm or suppression system shall be routed through the enclosures, raceways, and conduits dedicated to the fire alarm or suppression system.

C. Splicing of circuits shall be kept to a minimum and is only permitted in an electrical box suitable for the purpose. Appropriate hardware shall be used to make the wire splices. Wires that are spliced together shall have the same color insulation.

D. White colored wire shall be used exclusively for the identification of the neutral conductor of an alternating-current circuit. Green wire shall be used only for identifying the earth-ground conductor of an AC or DC circuit. Appropriate color-coding shall be utilized for all other field wiring.

E. All electrical circuits shall be numerically tagged with suitable markings at each terminal point. All circuits shall correspond with the installation draw.

3.06 PIPE COLOR CODE MARKING

A. Color code mark piping as specified in Section 09 90 00 – Painting except for stainless steel piping. All preaction pipe shall be properly primed for painting and finished with a red color coating. All new fire protection supply piping 2 inches and greater shall be labeled every 25 feet in length, in accordance with the Lab Standard and ANSI A13.1. Labels shall be a minimum of 2 inches wide, with white lettering on red background that state "Preaction System Supply". Where piping can have multiple flow directions (i.e. a gridded system), directional marking is not required.

3.07 PRELIMINARY TESTS

A. The system, including the aboveground piping and system components, shall be inspected and tested to assure that equipment and components function as intended. Submit proposed procedures for Preliminary Tests, no later than 7 days prior to the proposed start of the tests and proposed date and time to begin the preliminary tests. The underground and aboveground interior piping systems and attached appurtenances subjected to system working pressure shall be tested in accordance with NFPA 13 requirements. Upon completion of specified tests, submit 3 copies of the completed Preliminary Test Report, no later than 7 days after the completion of the Tests. The Report shall include both the Contractor's Material and Test Certificate for Underground Piping and the Contractor's Material and Test Certificate for Aboveground Piping. All items in the Preliminary Tests Report shall be signed by the Fire Protection Engineer.

B. Aboveground Piping

1. Inspection and Testing Preparation

a. After the system has been installed per approved plans, confirm that all suspended ceilings are removed or provide visible access to all piping above the ceilings. All work from other trades has been completed (e.g. framing, electrical, painting, plumbing, mechanical, etc.), and follow-on work will not impact the installation of the preaction system. Contractor shall provide approved plans for review during the inspection and testing.

2. Hydrostatic Testing

a. Aboveground piping shall be hydrostatically tested in accordance with NFPA 13 and manufacturers, FM and AHJ. There shall be no drop in gauge pressure or visible leakage when the system is subjected to the hydrostatic test. The test pressure shall be read from a gauge located at the low elevation point of the system or portion being tested.

C. Testing of Field Devices

1. Each detector, alarm, pull station and abort switch shall be tested to ensure that the primary function of the device is carried out, and that any supervisory signals are properly received at their respective panel.

3.08 FINAL ACCEPTANCE TEST

A. Begin the Final Acceptance Test only when the Preliminary Test Report has been approved. Submit proposed procedures for Final Acceptance Test, no later than 14 days prior to the proposed start of the tests, and proposed date and time to begin the Test, submitted with the procedures. Notification shall be provided at least 14 days prior to the proposed start of the test. Notification shall include a copy of the Contractor's Material & Test Certificates. The Fire Protection Engineer shall conduct the Final Acceptance Test and shall provide a complete demonstration of the operation of the system. This shall include operation of control valves and flowing of inspector's test connections to verify operation of associated waterflow alarm switches. After operation of control valves has been completed, the main drain test shall be repeated to assure that control valves are in the open position. Submit as-built shop drawings, no later than 14 days after completion of the Final Tests, updated to reflect as-built conditions after all related work is completed. The installation shall not be considered accepted until identified discrepancies have been corrected and test documentation is properly completed and received. Submit 3 copies of the completed Final Acceptance Test Report no later than 7 days after the completion of the Final Acceptance Tests. All items in the Final Acceptance Report shall be signed by the Fire Protection Engineer.

B. Entire system shall be checked out, inspected, and functionally tested by factory authorized and trained personnel.

C. Inspection shall be performed in the presence of the Owners representative, engineer or architects representative, insuring authority, and/or the local AHJ (Authority Having Jurisdiction)

D. Prior to final acceptance, the contractor shall provide operational and safety training in all concepts of the system to the Owners key personnel. Release of water into the protected space shall not be part of the training requirements.

3.09 ONSITE TRAINING

A. The Fire Protection Engineer shall conduct a training course for operating and maintenance personnel as designated by the Contracting Officer. Submit proposed schedule, at least 14 days prior to the start of related training. Training shall be provided for a period of 8 hours of normal working time and shall start after the system is functionally complete and after the Final Acceptance Test. Submit 3 Operating and Maintenance Manuals listing step-by-step procedures required for system startup, operation, shutdown, and routine maintenance, at least 14 days prior to field training. The manuals shall include the manufacturer's name, model number, parts list, list of parts and tools that should be kept in stock by the owner for routine maintenance including the name of a local supplier, simplified wiring and controls diagrams,

troubleshooting guide, and recommended service organization (including address and telephone number) for each item of equipment. The Onsite Training shall cover all of the items contained in the approved manuals.

3.10 ROUTINE MAINTENANCE

A. Prior to preaction system turnover to the owner, routine maintenance on equipment shall be performed by a certified distributor of the furnished system, in accordance with the most current version of NFPA 13 and the manufacturer's installation, operation and maintenance manual.

END OF SECTION

NO TEXT ON THIS PAGE

ATTACHMENT S – 26 05 13 MEDIUM VOLTAGE CABLES

DIVISION 26

ELECTRICAL

(FILED SUB BID REQUIRED)

SECTION 26 05 13
MEDIUM VOLTAGE CABLES[1]

PART 1 – GENERAL

1.01 FILED SUB-BID REQUIREMENTS

A. This Section is part of the filed sub-bid for Division 26 – Electrical. See Section 26 05 00.

1.02 THE REQUIREMENT

A. The **ELECTRICAL SUBCONTRACTOR** shall furnish, install, connect, test, and place in satisfactory operating condition, ready for service, all medium voltage cables indicated on the Drawings, as specified herein, or required for proper operation of the installation. The work of connecting cables to equipment and devices shall be considered a part of this Section. All appurtenances required for the installation of medium voltage cable systems shall be furnished and installed by the **ELECTRICAL SUBCONTRACTOR**.

B. The scope of this Section does not include internal wiring factory installed by medium voltage electrical equipment manufacturers.

C. The manufacturer(s) shall furnish a twenty-five (25) year product warranty on all supplied medium voltage cables and a ten (10) year warranty on splices and terminations.

D. All personnel installing medium voltage splices or terminations shall be trained as specified in Part 3 – Execution of this Specification.

E. Reference Section 26 05 00 – Basic Electrical Requirements.

1.03 CODES AND STANDARDS

A. Medium voltage cables and appurtenances shall be designed, manufactured, and/or listed to the following standards as applicable:

1. Underwriters Laboratories (UL)

    a. UL 486A-486B – Standard for Safety Wire Connectors

---

1 Addendum No.5

b. UL 1072 – Standard for Medium-Voltage Power Cables

c. UL 1685 – Standard for Vertical-Tray Fire-Propagation and Smoke-Release Test for Electrical and Optical-Fiber Cables

2. American National Standards Institute (ANSI)

a. ANSI C119.4 – Electric Connectors – Connectors for use between aluminum-to-aluminum and aluminum-to-copper conductors designed for normal operation at or below 93 degrees C and copper-to-copper conductors designed for normal operation at or below 100 degrees C

b. ANSI WC 53 – Standard Test Methods for Extruded Dielectric Power, Control, Instrumentation, and Portable Cables for Test

3. American Society for Testing and Materials (ASTM)

a. ASTM B3 – Standard Specification for Soft or Annealed Copper Wire

b. ASTM B8 – Standard Specification for Concentric-Lay-Stranded Copper Conductors, Hard, Medium-Hard, or Soft

c. ASTM B496 – Standard Specification for Compact Round Concentric-Lay-Stranded Copper Conductors

d. ASTM D149 – Standard Test Method for Dielectric Breakdown Voltage and Dielectric Strength of Solid Electrical Insulating Materials at Commercial Power Frequencies

e. ASTM D150 – Standard Test Methods for AC Loss Characteristics and Permittivity (Dielectric Constant) of Solid Electrical Insulation

f. ASTM D412 – Standard Test Methods for Vulcanized Rubber and Thermoplastic Elastomers-Tension

g. ASTM D2303 – Standard Test Methods for Liquid-Contaminant, Inclined-Plane Tracking and Erosion of Insulating Materials

h. ASTM D2754 – Standard Specification for High-Temperature Glass Cloth Pressure-Sensitive Electrical Insulating Tape

4. National Electrical Manufacturers Association

a. NEMA WC 53 – Standard Test Methods for Extruded Dielectric Power, Control, Instrumentation, and Portable Cables for Test

b. NEMA WC 74 – 5-46 kV Shielded Power Cable for Use in the Transmission and Distribution of Electric Energy

100322

5. Insulated Cable Engineers Association (ICEA)

    a. ICEA T-27-581 – Standard Test Methods for Extruded Dielectric Power, Control, Instrumentation, and Portable Cables for Test

    b. ICEA S-93-639 – 5-46 kV Shielded Power Cable for Use in the Transmission and Distribution of Electric Energy

    c. ICEA S-97-682 – Standard for Utility Shielded Power Cables Rated 5 Through 46 kV

6. Institute of Electrical and Electronics Engineers (IEEE)

    a. IEEE 48 – Standard for Test Procedures and Requirements for Alternating-Current Cable Terminations Used on Shielded Cables Having Laminated Insulation Rated 2.5 kV through 765 kV or Extruded Insulation Rated 2.5 kV through 500 kV

    b. IEEE 386 – Standard for Separable Insulated Connector Systems for Power Distribution Systems above 600 V

    c. IEEE 404 – Standard for Extruded and Laminated Dielectric Shielded Cable Joints Rated 2.5 kV to 500 kV

    d. IEEE 1202 – Standard for Flame Testing of Cables

7. Association of Edison Illuminating Companies (AEIC)

    a. AEIC CS8 – Specification for Extruded Dielectric Shielded Power Cables Rated 5 Through 46 kV

1.04 SUBMITTALS

A. In accordance with the procedures and requirements set forth in the General Conditions and Section 01 33 00 – Submittal Procedures, the **ELECTRICAL SUBCONTRACTOR** shall obtain from the cable manufacturer and submit the following:

    1. Shop drawings

    2. Reports of certified shop and field tests

    3. Wiring identification methods

    4. Manufacturer’s warranty statements

    5. Certificates of training for termination and splice installers

B. Each submittal shall be identified by the applicable Specification Section.

1.05 SHOP DRAWINGS

A. Each submittal shall be complete in all respects, incorporating all information and data listed herein and all additional information required for evaluation of the proposed materials' compliance with the Contract Documents.

B. Partial, incomplete, or illegible Submittals will be returned to the **ELECTRICAL SUBCONTRACTOR** without review for resubmittal.

C. Shop drawings shall include but not be limited to:

1. A Compliance, Deviations, and Exceptions (CD&E) letter. If the shop drawings are submitted without this CD&E letter, the submittal will be rejected. The letter shall include all comments, deviations and exceptions taken to the Drawings and Specifications by the **ELECTRICAL SUBCONTRACTOR** AND Equipment Manufacturer/Supplier. This letter shall include a copy of this Specification Section. In the left margin beside each and every paragraph/item, a letter "C", "D", or "E" shall be typed or written in. The letter "C" shall be for full compliance with the requirement. The letter "D" shall be for a deviation from the requirement. The letter "E" shall be for taking exception to a requirement. Any requirements with the letter "D" or "E" beside them shall be provided with a full typewritten explanation of the deviation/exception. Handwritten explanation of the deviations/exceptions is not acceptable. The CD&E letter shall also address deviations, and exceptions taken to each Drawing related to this Specification Section.

2. Product data sheets.

3. Cable pulling calculations.

4. Cable identification methods and materials.

5. Medium voltage splicing and termination product data sheets.

6. The cable manufacturer's recommended maximum test voltage and time duration values for field acceptance testing.

D. The shop drawing information shall be complete and organized in such a way that the Engineer can determine if the requirements of these specifications are being met. Copies of technical bulletins, technical data sheets from "soft-cover" catalogs, and similar information which is "highlighted" or somehow identifies the specific equipment items the **ELECTRICAL SUBCONTRACTOR** intends to provide are acceptable and shall be submitted.

1.06 IDENTIFICATION

A. Each cable shall be identified as specified in Part 3 – Execution of this Specification.

1.07 CABLE PULLING CALCULATIONS

A. The **ELECTRICAL SUBCONTRACTOR** shall submit cable pulling calculations for approval at least 5 working days prior to making each cable pull. These calculations, to be performed by a currently registered Professional Engineer in the State or Commonwealth in which the project is located, shall define pulling tension and sidewall loading (sidewall bearing pressure values) for all medium voltage cable installations.

PART 2 – PRODUCTS

2.01 MANUFACTURERS

A. The cables to be furnished and installed for this project shall be the product of manufacturers who have been in the business of manufacturing medium voltage cables for a minimum of ten (10) years. Cables shall be designed, constructed, and installed in accordance with the best practices of the trade, and shall operate satisfactorily when installed as specified herein and indicated on the Drawings. Only one (1) manufacturer for each cable type shall be permitted.

B. The cable manufacturer shall be ISO 9000 registered.

2.02 SHIELDED POWER CABLE (ALL VOLTAGE CLASSES)

A. Except where specified otherwise herein, the requirements of this Article shall apply to all voltage classes of medium voltage shielded power cable.

B. The cable to be furnished and installed for medium voltage circuits shall be shielded power cable, UL Listed as MEC Type MV-105. The voltage class of the cable for each circuit shall be as indicated on the Drawings, or if not shown, as approved by the Engineer. In no case shall the voltage rating of the shielded power cable be less than the voltage rating of the circuit being supplied by the cable.

C. The conductor shall be annealed bare copper per ASTM B3, Class B compact or compressed stranded per ASTM B8 or B-496, with an extruded thermoset semiconducting EPR conductor shield/screen (i.e. strand shield/screen). The conductor screen shall meet or exceed the electrical and physical requirements of ICEA S-93-639 (NEMA WC74) and S-97-682, AEIC CS8, and UL 1072.

D. The insulation shall be an ethylene-propylene rubber (EPR) based thermosetting compound which meets or exceeds the electrical and physical requirements of ICEA S-93-639 (NEMA WC74) and S-97-682, AEIC CS8, and UL 1072. Insulation level shall be 133% for the respective voltage class, and as specified elsewhere herein.

E. A thermoset extruded semiconducting insulation screen shall be extruded directly over the insulation and shall be easily strippable without the use of a release agent. The insulation screen shall meet or exceed the electrical and physical requirements of ICEA

S-93-639 (NEMA WC74) and S-97-682, AEIC CS8, and UL 1072. The insulation thickness and voltage rating shall be as specified herein.

F. The semiconducting conductor shield/screen, insulation, and semiconducting insulation screen shall be simultaneously extruded utilizing an enclosed, true triple extrusion process to prevent contamination of the conductor shield/screen, insulation, and insulation shield.

G. The metallic insulation shield shall be a 5-mil bare copper tape helically applied over the insulation with a nominal 25% percent overlap. Cables using corrugated shield/drain wires are not acceptable.

H. The cable jacket shall be flame-retardant, moisture, abrasion, and sunlight-resistant PVC which meets or exceeds the electrical and physical requirements of ICEA S-93-639 (NEMA WC74) and S-97-682, and UL 1072. Sizes #1/0 AWG and larger shall be listed and marked “Sunlight- Resistant FOR CT USE” in accordance with the MEC.

I. The shielded power cable shall be Okoguard-Okoseal as manufactured by the Okonite Company, Uniblend XLF PVC High Speed as manufactured by General Cable, SIMpull CT1 ET as manufactured by Southwire Company equivalent, or equal.

2.03 15KV SHIELDED POWER CABLE

A. The insulation for 15kV shielded power cables shall be 220 mils, rated 15kV-133% insulation level.

2.04 SHIELDED POWER CABLE TERMINATIONS

A. Shielded power cable termination kits shall be factory engineered for the application, rated for the voltage class of the associated cable. The insulator material for the termination shall be suitable for outdoor applications and made from UV-stable, non-tracking (per ASTM D2303) materials. Sealant materials to help prevent moisture ingress and contamination shall also be included. All terminations shall meet or exceed all rating requirements for IEEE 48 Class 1 terminations. These terminations shall meet the test sequence requirements prescribed by IEEE 48, including 130°C load cycling and 130°C impulse withstand.

B. In “Heavy” or “Extremely Heavy” environments, as classified by IEEE-48, terminations shall consist of a heat shrinkable outer insulating tubing coated internally with a stress control material or a heat shrinkable outer insulating tubing and a separate heat shrinkable stress control tubing. Heat-activated sealant materials to help prevent moisture ingress and contamination shall also be included. These terminations shall meet the test sequence requirements prescribed by IEEE 48, including 140°C load cycling and 140°C impulse withstand.

C. Terminations for outdoor exposed locations shall be provided with insulating skirts. Terminations for indoor locations, or within weather-protected outdoor equipment shall

not be required to have insulating skirts, so long as the termination length does not require the termination to be partially installed into the associated conduit. Insulating skirts shall be provided where termination would otherwise be partially installed into the associated conduit.

D. Conductor termination lugs shall either be constructed of tin-plated copper or be constructed of aluminum that is marked as CU-AL for use with a copper conductors. Lugs shall be NEMA 2-hole type with hydraulically compressed or shear bolt type barrel. Shear bolt lugs shall be continuous pressure type, utilizing friction plates to maintain the contact force. Lugs with set-screw type barrels are not acceptable. Lugs shall have a Class 2 conductor pull-out strength in accordance with ANSI C119.4.

E. The terminations shall be manufactured by The 3M Company, Tyco Electronics (Raychem), or equal.

2.05 SHIELDED POWER CABLE SPLICES

A. Power cable splices shall be factory-engineered kits that rebuild the primary cable insulation, shielding and grounding systems, and outer jacket equivalent to that of the original cable. When assembled on the cable, the splice shall be capable of passing the electrical test requirements of IEEE 404, and the water immersion tests of ANSI C119.4. Splices shall be suitable for direct-burial, manhole, cable tray, and UV exposed areas. Pre-molded splices are not acceptable. Taped splices are not acceptable.

B. The splices shall provide a positive moisture seal provided by heat activated or pressure activated sealant.

C. The splices shall accommodate a range of cable sizes and be completely independent of cable manufacturer's tolerances. Splices shall be capable of being properly installed on out-of-round cables per relevant ICEA and AEIC standards.

D. Splices for armored cables shall provide a means of reinstating the armor over the span of the installed splices.

E. Heat shrinkable splices shall meet the 140°C load cycling and 140°C impulse withstand requirements of IEEE 404.

F. Heat shrinkable splices shall be of a uniform-cross-section heat shrinkable polymeric construction. Internal moisture seals shall inhibit migration of moisture from other sections of the cable where jacket damage may have occurred.

G. Single component cold shrinkable splices shall be molded from silicone rubber and have integrated stress relief cones and a faraday cage. It is preferred to have integrated on a single spiral holdout: the splice body, metallic shield, and re-jacketing sleeve. The integrated metallic shield shall be a flexible copper sock capable of carrying the neutral current with ampacity greater than or equal to 1/0AWG copper. The re-jacketing sleeve shall be extruded from EPDM rubber. The re-jacketing sleeve shall provide a tight

interference fit with the cable jacket and supplied sealing mastic in order to assure an environmental seal per IEEE 404.

H. In “Heavy” or “Extremely Heavy” environments as classified by IEEE 48, heat shrinkable splices are required.

I. The splice manufacturer shall provide a test report demonstrating compliance with the above requirements.

J. Modular splicing kits, utilizing separable connectors which bolt together, may only be used if specifically approved, in writing, by the Engineer. Modular splicing kits shall be rated for the voltage class of the cable, and an ampacity of 600A, and shall meet or exceed the requirements of IEEE 386.

K. The splices shall be manufactured by the 3M Company, Tyco Electronics (Raychem), or equal.

2.06 CABLE PULLING LUBRICANTS

A. Cable pulling lubricants shall be non-hardening type and approved for use on the type of cable installed. Lubricant shall be Cable Gel by Greenlee, Poly-Gel by Gardner Bender, or equal.

PART 3 – EXECUTION

3.01 GENERAL

A. The cables shall be installed as specified herein and indicated on the Drawings.

B. The cables shall be terminated in accordance with the cable and/or termination product manufacturer's instructions for the particular type of cable.

C. The **ELECTRICAL SUBCONTRACTOR** shall furnish and install dead front, 600A non-load break (i.e. “dead break”), elbow terminators for the primary cables to the pad-mount transformers, termination cabinets, and other equipment requiring such connectors. Elbow terminators shall meet or exceed the requirements of IEEE 386. The elbow terminators shall be manufactured by The 3M Company, Tyco Electronics (Raychem), or equal. Reference Section 26 12 19 – Medium Voltage Transformers - Liquid Filled Pad-Mount.

D. Splices shall not be allowed in any medium voltage cables. If splices are required, the **ELECTRICAL SUBCONTRACTOR** shall obtain approval in writing from the Engineer prior to splicing. Splicing material shall be as specified herein and as accepted by the Engineer.

E. Cable Sizes

1. The sizes of cable shall be as indicated on the Drawings, or if not shown, as approved by the Engineer.

F. Cable Identification

1. Cables shall be identified as follows:

   a. 15kV Class cables shall be provided with three (3) strips of identification tape

2. All cables shall be identified at each point of termination. This includes but is not limited to identification at the source, load, and in any intermediate junction boxes where a termination is made. The **ELECTRICAL SUBCONTRACTOR** shall meet with the Owner and Engineer to come to an agreement regarding a cable identification system prior to installation of any cables. Cable numbers, where applicable, shall not be duplicated.

3. Cable identification in manholes, pull boxes, vaults, and other accessible components in the raceway system where the cables are continuous shall be accomplished by means of a tag installed around the bundled group of conductors. Identification shall utilize a FROM-TO system. Each group of conductors shall consist of all of the individual conductors in a single conduit or duct. The tag shall have text that identifies the bundle in accordance with the 'FROM' and 'TO' column for that particular conduit number in the conduit and wire schedule. Minimum text size shall be 10 point. The tag shall be affixed to the cable bundle by the use of nylon wire ties and shall be made of polyethylene as manufactured by Brady, Seton equivalent, Panduit equivalent, or equal.

G. Cable Arc and Fireproofing

1. All medium voltage cables installed in manholes, pull boxes, vaults, and other accessible components in the raceway system shall be arc and fireproofed utilizing one of the following tape systems:

2. Plymouth Rubber Group

   a. 53 PLYARC Arc and Fireproofing Tape

      1) 3 inches wide with a thickness of 30 mils.

      2) Tape shall be wrapped around cable in one half-lapped layer.

   b. 77 PLYGLAS Glass Cloth Tape

      1) 7 mils thickness.

      2) Tape shall be utilized to secure the 53 PLYARC.

      3) Tape shall be in accordance with ASTM D-2754.

3. The 3M Company

   a. Scotch 77 Fire and Electric Arc Proofing Tape

      1) 1.5 inches or 3 inches wide, depending upon cable diameter and in accordance with the manufacturer’s installation instructions, with a thickness of 30 mils.

      2) Tape shall be wrapped around cable in one half-lapped layer.

   b. Scotch 69 Glass Cloth Tape

      1) 7 mils thickness.

      2) Tape shall be utilized to secure the Scotch 77.

      3) Tape shall be in accordance with ASTM D-2754.

4. Each individual cable shall be individually arc and fireproofed 6” into the duct. Multiple cables within a single wrap of fireproofing tape shall not be permitted.

H. Training of Cable

1. The **ELECTRICAL SUBCONTRACTOR** shall furnish all labor and material required to train cables around cable vaults within buildings, and in manholes in the outdoor underground duct system. Sufficient length of cable shall be provided in each manhole and vault so that the cable can be trained and racked in an approved manner. In training or racking, the radius of bend of any cable shall be not less than the manufacturer's recommendation. All manhole cables shall be arc and fire-proofed. The training shall be done in such a manner as to minimize chaffing. Reference Section 33 71 19 – Underground Electrical.

I. Connections at Equipment

1. Connections at equipment shall be made in accordance with the best practices of the trade, and the cable and/or termination product manufacturer's instructions for the particular type of cable.

J. Pulling Temperature

1. Cable shall not be flexed or pulled when the temperature of the jacket is such that damage will occur due to low temperature embrittlement. When cable will be pulled with an ambient temperature of 40°F or less within a three (3) day period prior to pulling, the cable reels shall be stored three (3) days prior to pulling in a protected storage area with an ambient temperature of 55°F or more. Cable pulling shall be completed during the workday for which the cable is removed from the protected storage. Any remaining cable reels shall be returned to storage at the completion of the workday.

3.02 MEDIUM VOLTAGE CABLE INSTALLATION

A. Medium voltage cable shall be installed so that no damage occurs to the insulation or outer jacket. Cable shall not be bent or twisted such that the tape shield is pulled apart. The tape shield shall be twisted and grounded at each termination.

B. Terminations shall be made with stress control kits in freestanding equipment and loadbreak elbows in pad mounted equipment. Terminations shall meet or exceed the ratings of the cable and the interrupting capacity of the connected equipment. Terminations shall be as specified in Part 2, Products, of this Specification.

C. All splices and terminations shall be in compliance with the cable and splice/termination manufacturer's recommendations. These recommendations shall be submitted to the Engineer for review one (1) week prior to making any splices or terminations.

D. Installers shall be trained by the factory supplying medium voltage terminations and splices in the proper installation of the products. Installers shall be able to produce evidence of such training within the past three (3) years. This evidence shall be submitted to the Engineer for review one (1) week prior to making any splices or terminations.

3.03 MATERIAL STORAGE AND HANDLING

A. The **ELECTRICAL SUBCONTRACTOR** shall inspect the cable and reels upon receipt for visible or hidden damage. Reels should not be shipped on their side and should be shipped with a protective cover over the cable on the reel. Reels turned over onto their side are subject to damage. Reels shall not be rolled-off the truck or lifted by forks on the drum. Reels shall be lifted by a chain connected to a spreader bar through the arbor hole. Reel ends shall be covered by a heat-shrinkable end cap upon shipment, and again each time a cable end has been cut from the reel. The **ELECTRICAL SUBCONTRACTOR** shall note any damage that has been identified on the bill of lading and take photos of the damage at the time of delivery. Any damage shall be reported to the Engineer, project management, and cable distributor, and such report(s) shall include the photos of the damage.

B. Cable reels shall be stored in areas away from high traffic (where it may be subject to damage).

3.04 TESTING

A. All testing shall be performed in accordance with the requirements of the General Conditions and Division 01. The following tests are required:

1. Shop Tests

a. Cables shall be tested in accordance with the applicable ICEA Standards. Cables shall be physically and electrically tested in accordance with the manufacturer's standards.

b. Cable shall be tested at the factory in accordance with AEIC CS8 (latest revision) except that the cable shall be corona free when tested at 200 VAC per mil and 363 VDC per mil. Corona test results to be available on an X-Y plot. Tests shall be as described by ICEA S-93-639 (NEMA WC74), Section 6 or ICEA T-27-581 (NEMA WC53).

2. Field Tests

a. Field testing shall be performed in accordance with NETA Acceptance Testing Specifications (ATS), latest edition.

b. After installation, all medium voltage cables shall be tested for insulation levels and continuity in accordance with NETA test documents and the cable manufacturer's recommendations. Insulation resistance between conductors of the same circuit and between conductor and ground shall be tested. Testing for insulation levels shall be as follows:

1) Cable shall be given a conductor continuity check and a high voltage DC field acceptance test after installation. The DC test voltage shall be in accordance with AEIC CS8, however shall not exceed the cable manufacturer's recommended maximum test voltage and time duration.

B. Medium voltage cables shall be tested before being connected to equipment.

C. If tests reveal defects or deficiencies, the **ELECTRICAL SUBCONTRACTOR** shall make the necessary repairs or shall replace the cable as directed by the Engineer, without additional cost to the Owner. All conductors of a multi-phase circuit shall be replaced if one conductor fails the required testing. If part of a multi-set (parallel conductors per phase) circuit fails testing, only the set containing failure shall be replaced.

D. All tests shall be made by and at the expense of the **ELECTRICAL SUBCONTRACTOR** who shall supply all testing equipment. Test reports shall be submitted to the Engineer.

END OF SECTION

ATTACHMENT T – 26 05 19 LOW VOLTAGE CONDUCTORS AND CABLES

DIVISION 26

ELECTRICAL

(FILED SUB BID REQUIRED)

SECTION 26 05 19
LOW VOLTAGE CONDUCTORS AND CABLES[1]

PART 1 – GENERAL

1.01 FILED SUB-BID REQUIREMENTS

A. This Section is part of the filed sub-bid for Division 26 – Electrical. See Section 26 05 00.

1.02 THE REQUIREMENT

A. The **ELECTRICAL SUBCONTRACTOR** shall furnish, install, connect, test, and place in satisfactory operating condition, all low voltage wire and cable indicated on the Drawings and as specified herein and/or required for proper operation. The work of connecting cables to equipment and devices shall be considered a part of this Section. All appurtenances required for the installation of wire and cable systems shall be furnished and installed by the **ELECTRICAL SUBCONTRACTOR**.

B. The scope of this Section does not include internal wiring factory installed by electrical equipment manufacturers.

C. Reference the following specification sections:

1. Section 26 05 00 – Basic Electrical Requirements and

2. Section 26 05 33.16 – Boxes for Electrical Systems.

3. Section 26 28 16.16 – Enclosed Switches

1.03 CODES AND STANDARDS

A. Low voltage wire, cable, and appurtenances shall be designed, manufactured, and/or listed to the following standards as applicable:

1. Underwriters Laboratories (UL)

   a. UL 13 – Standard for Power-Limited Circuit Cables

   b. UL 44 – Thermoset-Insulated Wires and Cables

---

1 Addendum No.5

c. UL 83 – Thermoplastic-Insulated Wires and Cables

d. UL 1277 – Standard for Electrical Power and Control Tray Cables with Optional Optical-Fiber Members

e. UL 1581 – Reference Standard for Electrical Wires, Cables, and Flexible Cords

f. UL 1685 – Standard for Vertical-Tray Fire-Propagation and Smoke-Release Test for Electrical and Optical-Fiber Cables

g. UL 2250 – Standard for Instrumentation Tray Cable

h. UL 2556 – Wire and Cable Test Methods

2. American Society for Testing and Materials (ASTM)

a. ASTM B3 – Standard Specification for Soft or Annealed Copper Wire

b. ASTM B8 – Standard Specification for Concentric-Lay-Stranded Copper Conductors, Hard, Medium-Hard, or Soft

c. ASTM B33 – Standard Specification for Tin-Coated Soft or Annealed Copper Wire for Electrical Purposes

d. ASTM D69 – Standard Test Methods for Friction Tapes

e. ASTM D4388 – Standard Specification for Nonmetallic Semi-Conducting and Electrically Insulating Rubber Tapes

3. Insulated Cable Engineers Association (ICEA)

a. ICEA S-58-679 – Standard for Control, Instrumentation and Thermocouple Extension Conductor Identification

b. ICEA T-29-250 – Conducting Vertical Cable Tray Flame Tests with Theoretical Heat Input Rate of 210,000 B.T.U./Hour

4. Institute of Electrical and Electronics Engineers (IEEE)

a. IEEE 1202 – Standard for Flame Testing of Cables

1.04 SUBMITTALS

A. In accordance with the procedures and requirements set forth in the General Conditions and Section 01 33 00 – Submittal Procedures, the **ELECTRICAL SUBCONTRACTOR** shall obtain from the wire and cable manufacturer and submit the following: 121922

1. Shop Drawings

2. Reports of Field Tests

B. Each submittal shall be identified by the applicable Specification Section.

1.05 SHOP DRAWINGS

A. Each submittal shall be complete in all respects, incorporating all information and data listed herein and all additional information required for evaluation of the proposed material's compliance with the Contract Documents.

B. Partial, incomplete, or illegible Submittals will be returned to the **ELECTRICAL SUBCONTRACTOR** without review for resubmittal.

C. Shop drawings shall include but not be limited to:

1. Product data sheets for the following:

a. Wire and cable

1) The product data sheets for wire and cable for up to four (4) manufacturers for each type of wire/cable specified herein will be reviewed if they are submitted at the same time under the same submittal cover for simultaneous review.

b. Power and control wire terminations, including wire ferrules

c. Instrumentation cable terminations

d. Shielded VFD cable terminations

e. Pulling lubricant.

2. Cable pulling calculations (if required).

3. Wiring identification methods and materials.

D. The shop drawing information shall be complete and organized in such a way that the Engineer can determine if the requirements of these specifications are being met. Copies of technical bulletins, technical data sheets from "soft-cover" catalogs, and similar information which is "highlighted" or somehow identifies the specific equipment items the **ELECTRICAL SUBCONTRACTOR** intends to provide are acceptable and shall be submitted.

1.06 CABLE PULLING CALCULATIONS

A. Prior to the installation of the wire and cable specified herein, the **ELECTRICAL SUBCONTRACTOR** shall submit cable pulling calculations for Engineer review and approval when all of the following are true:

1. The amount of cable to be installed will be greater than 200 linear feet between pull points.

2. The installation will have one or more bends.

3. The wire and cable is size #1/0 AWG and larger.

B. Cable pulling calculations shall be performed by a currently registered Professional Engineer in the State or Commonwealth in which the project is located and shall define pulling tension and sidewall loading (sidewall bearing pressure values).

PART 2 – PRODUCTS

2.01 MANUFACTURERS

A. The wire and cable to be furnished and installed for this project shall be the product of manufacturers who have been in the business of manufacturing wire and cable for a minimum of ten (10) years. Wire and cable shall be designed, constructed, and installed in accordance with the best practices of the trade, and shall operate satisfactorily when installed as specified herein and indicated on the Drawings. Only one (1) manufacturer for each wire and cable type shall be permitted.

2.02 POWER AND CONTROL WIRE AND CABLE

A. Power wire installed between the output terminals of a VFD and the respective motor shall consist of insulated copper conductors. Conductor insulation shall be rated for 90°C in both wet and dry locations, and 600V. Insulated conductors shall be UL 44 Listed as MEC Type XHHW-2.

B. Power wire for all other loads and control wire shall consist of insulated copper conductors with a nylon (or equivalent) outer jacket. Conductor insulation shall be rated 90°C for dry locations, 75°C for wet locations, and 600V. Insulated conductors shall be UL 83 Listed as MEC Type THHN/THWN.

C. Unless specified otherwise herein, conductors shall be stranded copper per ASTM B-8 and B-3, with Class B or C stranding contingent upon the size. Power conductors for lighting and receptacle branch circuits shall be solid copper per ASTM B-3.

D. Power conductor size shall be no smaller than No. 12 AWG and Control conductor size shall be no smaller than No. 14 AWG.

E. Multi-conductor cable assemblies shall include a grounding conductor and an overall PVC jacket. The jacket shall be PVC and resistant to abrasion, sunlight, and flame in accordance with UL 1277. Multi-conductor cable assemblies shall be UL 1277 Listed as MEC Type TC (Power and Control Tray Cable).

F. Power wire and cable shall be as manufactured by the Okonite Company, the Southwire Company, General Cable, Encore Wire, or equal.

2.03 INSTRUMENTATION CABLE

A. For single-analog signal applications, instrumentation cable shall consist of a single, twisted pair or triad of individually insulated and jacketed copper conductors with an overall cable shield and jacket. Conductor insulation shall be rated 90°C in both wet and dry locations, and 600V. The jacket shall be PVC and resistant to abrasion, sunlight, and flame in accordance with UL 1277. Cable shall be UL 1277 Listed as MEC Type TC (Power and Control Tray Cable).

B. For multiple-analog signal applications, instrumentation cable shall consist of multiple, twisted pairs or triads (i.e. groups) of individually insulated and jacketed copper conductors with individual pair/triad shields (i.e. group shields) and an overall cable shield and jacket. Conductor insulation shall be rated 90°C in both wet and dry locations, and 600V. The jacket shall be PVC and resistant to abrasion, sunlight, and flame in accordance with UL 1277. Cable shall be UL 1277 Listed as MEC Type TC (Power and Control Tray Cable).

C. Cable and group shields shall consist of overlapped aluminum/polyester tape/foil providing 100% coverage. Instrumentation cables shall include an overall copper shield drain wire. Cables containing multiple twisted pairs or triads shall also include group shield drain wires.

D. Conductors, including drain wires, shall be tin or alloy coated (if available), soft, annealed copper, stranded per ASTM B-8, with Class B stranding unless otherwise specified.

E. Instrumentation signal conductor size shall be no smaller than No. 16 AWG.

F. Instrumentation cable shall be Okoseal-N Type P-OS (for single pair or triad applications) or Okoseal-N Type SP-OS (for multiple pair or triad applications) as manufactured by the Okonite Company, Belden equivalent, Southwire Company equivalent, or equal.

2.04 SHIELDED VFD CABLE

A. Where indicated on the Drawings, shielded VFD cable shall be installed between the output terminals of a VFD and the respective motor.

B. Shielded VFD cable shall consist of three (3) individually insulated copper phase conductors and three (3) bare copper grounding conductors with an overall cable shield and jacket, suitable for use with variable frequency drives. The phase conductors and ground conductors shall be symmetrically arranged within the cable assembly. Conductor insulation shall be rated 90°C in both wet and dry locations, and 2000V (2kV). Insulated conductors shall be UL Listed as NEC Type RHW-2 or XHHW-2. The jacket

shall be PVC and resistant to abrasion, sunlight, and flame in accordance with UL 1277. Cable shall be UL Listed as NEC Type TC-ER (Tray Cable for Exposed Runs).

C. Phase conductors shall be sized as shown on the Drawings. Ground conductors shall have a combined circular mil area equivalent to the equipment grounding conductor size required by NEC Table 250.122, minimum. Filler material shall be included in the cable assembly as necessary to make the cable round.

D. Cable shields shall consist of a helically applied bare copper tape with 50% overlap, minimum. For small conductor sizes where copper tape shields are not available, shields shall be permitted to consist of a layer of tin-coated copper braid covered by a layer of overlapped aluminum/polyester tape/foil. All cable shields shall provide 100% coverage.

E. Conductors shall be annealed, tinned, stranded copper per ASTM B3, B8, and B33.

F. Shielded VFD cable shall be as manufactured by Belden Wire and Cable, the Okonite Company, General Cable, Southwire, or AmerCable Inc.

2.05 OTHER CABLES

A. Category 6 UTP communication cables and fiber optic cables shall be as specified in Specification Section 40 66 00 – Network and Communication Equipment.

2.06 CONDUCTOR IDENTIFICATION

A. Conductors shall be identified using a color-coding method. Color coding for individual power, control, lighting, and receptacle conductors shall be as follows:

1. 480/277V AC Power

    a. Phase A – BROWN

    b. Phase B – ORANGE

    c. Phase C – YELLOW

    d. Neutral – GREY

2. 120/208V or 120/240V AC Power

    a. Phase A – BLACK

    b. Phase B – RED

    c. Phase C – BLUE

    d. Neutral – WHITE

3. DC Power

a. Positive Lead – RED

b. Negative Lead - BLACK

4. DC Control

a. All wiring – BLUE

5. 120 VAC Control

a. 120 VAC control wire shall be RED except for a wire entering a motor control center compartment, motor controller, or control panel which is an interlock. This interlock conductor shall be color coded YELLOW. For the purposes of this Section, an interlock is defined as any wiring that brings voltage into the above-mentioned equipment from a source outside that equipment.

6. 24 VAC Control

a. All wiring - ORANGE

7. Equipment Grounding Conductor

a. All wiring - GREEN

B. Individual conductors No. 2 AWG and smaller shall have factory color coded insulation. It is acceptable for individual conductors larger than No.2 AWG to be provided with factory color coded insulation as well, but it is not required. Individual conductors larger than No.2 AWG that are not provided with factory color coded insulation shall be identified by the use of colored tape in accordance with the requirements listed in Part 3 herein. Insulation colors and tape colors shall be in accordance with the color-coding requirements listed above.

C. Conductors that are part of multi-conductor cable assemblies shall have black insulation. The conductor number shall be printed on each conductor's insulation in accordance with ICEA S-58-679, Method 4. Each conductor No.2 AWG and smaller within the cable assembly shall also be identified with a heat shrink tag with color coded background. Each conductor larger than No.2 AWG within the cable assembly shall also be identified by the use of colored tape. Heat shrink tags and colored tape shall be in accordance with the requirements listed in Part 3 herein. Tape color and heat shrink tag background color shall be in accordance with the color-coding requirements listed above.

2.07 CABLE PULLING LUBRICANTS

A. Cable pulling lubricants shall be non-hardening type and approved for use on the type of cable installed. Lubricant shall be Yellow #77 Plus by Ideal, Cable Gel by Greenlee, Poly-Gel by Gardner Bender, or equal.

PART 3 – EXECUTION

3.01 WIRE AND CABLE INSTALLATION

A. General

1. All wire and cable furnished under this Contract, including wire and cable furnished under other Divisions, shall be installed in raceways (e.g., conduit) unless specifically noted otherwise.

2. Wire and cable shall be installed as specified herein and indicated on the Drawings. Unless specifically indicated otherwise on the Drawings, wire and cable shall be installed in separate raceways according to wiring type. For example, power wiring shall not be combined with control wiring, and control wiring shall not be combined with instrumentation wiring.

3. Wire shall be furnished and installed as single conductor cables, with limited exceptions. Multi-conductor cable assemblies shall only be installed where indicated on the Drawings, required by the MEC, or after obtaining written permission from the Engineer.

4. Where instrumentation cables are installed in control panels, motor controllers, and other locations, the **ELECTRICAL SUBCONTRACTOR** shall arrange wiring to provide maximum clearance between these cables and other conductors. Instrumentation cables shall not be installed in same bundle with conductors of other circuits.

5. Instrumentation cable shielding shall be continuous and shall be grounded at one point only.

B. Splices

1. Splices shall not be allowed in power or control wire and cable unless approved in writing by the Engineer. If unique field conditions exist or pulling calculations indicate that splices may be required, the **ELECTRICAL SUBCONTRACTOR** shall submit a detailed request indicating why splices are required to the Engineer. The Engineer shall be under no obligation to grant such request.

2. Splicing materials shall be barrel type butt splice connectors and heat shrink tubing as manufactured by 3M, Ideal, or equal. The use of screw-on wire connectors (wire nuts) shall only be permitted for lighting and receptacle circuits.

3. No splicing of instrumentation cable is permitted.

C. Wire and Cable Sizes

1. The sizes of wire and cable shall be as indicated on the Drawings, or if not shown, as approved by the Engineer. If required due to field routing, the size of conductors

and respective conduit shall be increased so that the voltage drop measured from source to load does not exceed 2-1/2%.

D. Additional Conductor Identification

1. In addition to the color-coding identification requirements specified in Part 2 herein, individual conductors shall be provided with heat shrinkable identification tags. Identification tags for individual conductors shall have a white background where the conductor insulation is colored. Identification tags for individual conductors shall have a colored background where the conductor insulation is black. Background color shall match that of the taping provided on the individual black conductors.

2. Multi-conductor cables shall be provided with heat shrinkable identification tags in accordance with Part 2 herein.

3. All wiring shall be identified at each point of termination. This includes but is not limited to identification at the source, load, and in any intermediate junction boxes where a termination is made. The **ELECTRICAL SUBCONTRACTOR** shall meet with the Owner and Engineer to come to an agreement regarding a wire identification system prior to installation of any wiring. Wire numbers shall not be duplicated.

4. Wire identification shall be by means of a heat shrinkable sleeve with appropriately colored background and black text. Wire sizes #14 AWG through #10 AWG shall have a minimum text size of 7 points. Wire sizes #8 AWG and larger shall have a minimum text size of 10 points. Sleeves shall be of appropriate length to fit the required text. The use of handwritten text for wire identification shall not be permitted.

5. Sleeves shall be suitable for the size of wire on which they are installed. Sleeves shall not be heat-shrunk onto control cables. Tags shall remain loose on cable to promote easier identification. For all other applications, sleeves shall be tightly affixed to the wire and shall not move. Sleeves shall be heat shrunk onto wiring with a heat gun approved for the application. Sleeves shall not be heated by any means which employs the use of an open flame. The **ELECTRICAL SUBCONTRACTOR** shall take special care to ensure that the wiring insulation is not damaged during the heating process.

6. Sleeves shall be installed prior to the completion of the wiring terminations and shall be oriented so that they can be easily read.

7. Sleeves shall be polyolefin as manufactured by Brady, Seton, Panduit, or equal.

8. Wire identification in manholes, handholes, pull boxes, and other accessible components in the raceway system where the wiring is continuous (no terminations are made) shall be accomplished by means of a tag installed around the bundled group of individual conductors or around the outer conductor jacket of

a multi-conductor cable. Identification shall utilize a FROM-TO system. Each group of conductors shall consist of all of the individual conductors in a single conduit or duct. The tag shall have text that identifies the bundle in accordance with the 'FROM' and 'TO' column for that particular conduit number in the conduit and wire schedule. Minimum text size shall be 10 point. The tag shall be affixed to the wire bundle by the use of nylon wire ties and shall be made of polyethylene as manufactured by Brady, Seton, Panduit, or equal.

9. Where colored tape is used to identify cables, it shall be wrapped around the cable with a 25% overlap and shall cover at least 2 inches of the cable.

E. Wiring Supplies

1. Rubber insulating tape shall be in accordance with ASTM D4388. Friction tape shall be in accordance with ASTM D69.

F. Training of Cable in Manholes, Handholes, and Vaults

1. The **ELECTRICAL SUBCONTRACTOR** shall furnish all labor and material required to train cables around cable vaults, manholes, and handholes. Sufficient length of cable shall be provided in each handhole, manhole, and vault so that the cable can be trained and racked in an approved manner. In training or racking, the radius of bend of any cable shall be not less than the manufacturer's recommendation. The training shall be done in such a manner as to minimize chaffing.

2. Instrumentation cable shall be racked and bundled separate from AC wiring to maintain the required separation as follows:

a. 18 inches for 480/277 VAC wiring

b. 12 inches for 208/120 VAC wiring

c. 6 inches for 24 VAC wiring

G. Conductor Terminations

1. Where wires are terminated at equipment which requires lugs, connections shall be made by solderless mechanical lug, crimp type ferrule, or irreversible compression type lugs. Reference individual equipment Specification Sections as applicable for additional termination requirements.

2. For conductors with stranding other than Class B or C, a UL 486A Listed wire ferrule shall be installed prior to each conductor termination. Ferrules shall be suitable for the size of conductors and shall be made of a material that is compatible with the conductors. Ferrules shall be crimped on in accordance with the ferrule manufacturer's instructions.

3. Where enclosure sizes and sizes of terminals at limit switches, solenoid valves, float switches, pressure switches, temperature switches, and other devices make terminations impractical due to the size of the field wiring, the **ELECTRICAL SUBCONTRACTOR** shall terminate field wiring in an adjacent junction box per the requirements of Section 26 05 33.16 – Boxes for Electrical Systems, complete with terminal strips. **ELECTRICAL SUBCONTRACTOR** shall install the smaller wiring from the device to the junction box in a conduit, using the terminal strip as the means for joining the two different wire sizes. Splicing of wires in lieu of using terminal strips is not acceptable.

4. The cables shall be terminated in accordance with the cable and/or termination product manufacturer's instructions for the particular type of cable.

5. Shielded VFD cables shall be terminated with kits required by or recommended by the approved shielded VFD cable manufacturer. Termination kits shall be installed in strict accordance with the shielded VFD cable manufacturer's and termination kit manufacturer's instructions. Where disconnect switches are shown on the Drawings to be installed on circuits utilizing shielded VFD cables, the installation shall be coordinated and executed as specified in Specification Section 26 28 16.16 – Enclosed Switches.

6. To minimize oxidation and corrosion, selected wire and cable shall be terminated using an oxide-inhibiting joint compound recommended for electrical connections. The compound shall be Penetrox E for copper-to-copper connections, and Penetrox A for all other connections, as manufactured by Burndy Electrical, or equal. The joint compound shall be used in the following installations:

   a. Termination of aluminum conductors, where aluminum conductors are specifically allowed by the Engineer.

   b. Terminations in all Class I and Class II, Division 1 and 2 hazardous areas.

7. All spare conductors shall be terminated on terminal blocks mounted within equipment or junction boxes. Unless otherwise noted, coiling up of spare conductors within enclosure is not acceptable

H. Pulling Temperature

1. Cable shall not be installed when the temperature of the jacket is such that damage will occur due to low temperature embrittlement. When cable will be pulled with an ambient temperature of 40°F or less within a three (3) day period prior to pulling, the cable reels shall be stored three (3) days prior to pulling in a protected storage area with an ambient temperature of 55°F or more. Cable pulling shall be completed during the workday for which the cable is removed from the protected storage. Any cable reels with wire remaining on them shall be returned to storage at the completion of the workday.

3.02 TESTING

A. All testing shall be performed in accordance with the requirements of the General Conditions and Division 01. The following tests are required:

1. Shop Test

   a. Wires and cables shall be tested in accordance with the applicable ICEA Standards. Wire and cable shall be physically and electrically tested in accordance with the manufacturer's standards.

2. Field Tests

   a. After installation, all wires and cables shall be tested for continuity. Testing for continuity shall be "test light" or "buzzer" style.

   b. After installation, wires and cables shall be tested for insulation resistance levels between conductors of the same circuit and between conductor and ground as follows:

      1) For #8 AWG and larger 600V wire and cable, apply 1,000 VDC from a Megohmmeter for one (1) minute. Resistance shall be no less than 100 Megohms.

      2) Instrumentation signal cable shall be tested from conductor to conductor, conductor to shield, and conductor to ground using a Simpson No. 260 volt-ohmmeter or approved equal. The resistance value shall be 200 Megohms or greater.

      3) Insulation resistance testing is not required for power and control cables smaller than #8 AWG.

   c. Wires and cables shall be tested after required terminations are made, but before being connected to any equipment.

   d. If tests reveal defects or deficiencies, the **ELECTRICAL SUBCONTRACTOR** shall make the necessary repairs or shall replace the cable as directed by the Engineer, without additional cost to the Owner. All conductors of a multi-phase circuit shall be replaced if one conductor fails the required testing. If part of a multi-set (parallel conductors per phase) circuit fails testing, only the set containing failure shall be replaced.

   e. All tests shall be made by and at the expense of the **ELECTRICAL SUBCONTRACTOR** who shall supply all testing equipment. Test reports shall be submitted to the Engineer.

Exhibit A
Test Data – Megohms
Test No. ____

Date:			Company:				
Time:			Location:				
Circuit:	Circuit Length:	Aerial:	Duct:	Buried:	No. of Conductors	Size:	AWG MCM Shield:
Insulation Material:			Insulation Thickness:		Voltage Rating:		Age:
Type: _____ Pothead _____ Terminal					Location: Indoors _____ Outdoors _____		

Number and Type of Joints:

Recent Operating History:

Manufacturer:

State if Potheads or Terminals were grounded during test:

List associated equipment included in test:

Miscellaneous Information:

Exhibit A
Test Data – Megohms
Test No. ____

Part Tested:	Test Performed: _____ Hours/Days: _____ After Shutdown: _____
Grounding Time:	Dry Bulb Temperature: _____ Wet Bulb Temperature: _____
Test Voltage:	Equipment Temperature: _____ How Obtained: _____ Relative Humidity: _____ Absolute Humidity: _____ Dew Point: _____

Megohmmeter: Serial Number: _____ Range: _____
Voltage: _____ Calibration Date: _____

Test Connections	To Line To Earth To Ground	To Line To Earth To Ground	To Line To Earth To Ground	Test Connections	To Line To Earth To Ground	To Line To Earth To Ground	To Line To Earth To Ground
1/4 Minute				5 Minutes			
1/2 Minute				6 Minutes			
3/4 Minute				7 Minutes			
1 Minute				8 Minutes			
2 Minutes				9 Minutes			
3 Minutes				10 Minutes			
4 Minutes				10/1 Minute Ratio			

Remarks:

END OF SECTION

ATTACHMENT U – 26 05 26 GROUNDING AND BONDING FOR ELECTRICAL SYSTEMS

DIVISION 26

ELECTRICAL

(FILED SUB BID REQUIRED)

SECTION 26 05 26

GROUNDING AND BONDING FOR ELECTRICAL SYSTEMS[1]

PART 1 – GENERAL

1.01 FILED SUB-BID REQUIREMENTS

A. This Section is part of the filed sub-bid for Division 26 – Electrical. See Section 26 05 00.

1.02 THE REQUIREMENT

A. **The ELECTRICAL SUBCONTRACTOR** shall furnish and install grounding systems complete in accordance with the minimum requirements established by Article 250 of the MEC. Article 250 of the MEC shall be considered a minimum requirement for compliance with this Specification.

B. Grounding of all instrumentation and control systems shall be furnished and installed in accordance with the manufacturer/system requirements and IEEE 1100. Conflicts shall be promptly brought to the attention of the Engineer.

C. In addition to the MEC requirements, building structural steel columns shall be permanently and effectively grounded:

D. Reference Section 26 05 00 – Basic Electrical Requirements

1.03 CODES AND STANDARDS

A. Equipment and materials covered under this Section shall be designed, manufactured, and/or listed to the following standards as applicable:

1. UL 467 – Grounding and Bonding Equipment

2. IEEE 81 – Guide for Measuring Earth Resistivity, Ground Impedance, and Earth Surface Potentials of a Ground System.

3. IEEE 1100 – Recommended Practice for Power and Grounding Electronic Equipment

---

1 Addendum No.5

1.04 SUBMITTALS

A. In accordance with the procedures and requirements set forth in the General Conditions and Section 01 33 00 – Submittal Procedures, the **ELECTRICAL SUBCONTRACTOR** shall obtain from the equipment manufacturer and submit the following:

1. Shop Drawings

2. Reports of certified field tests.

B. Each submittal shall be identified by the applicable Specification Section.

1.05 SHOP DRAWINGS

A. Each submittal shall be complete in all respects, incorporating all information and data listed herein and all additional information required for evaluation of the proposed equipment's compliance with the Contract Documents.

B. Partial, incomplete, or illegible submittals will be returned to the **ELECTRICAL SUBCONTRACTOR** without review for resubmittal.

C. Shop drawings shall include but not be limited to:

1. Product data sheets.

2. Drawings and written description of how the **ELECTRICAL SUBCONTRACTOR** intends to furnish and install the grounding system.

PART 2 – PRODUCTS

2.01 MANUFACTURERS

A. The equipment covered by these specifications shall be standard equipment of proven performance as manufactured by reputable concerns. Equipment shall be designed, constructed, and installed in accordance with the best practices of the trade, and shall operate satisfactorily when installed as shown on the Drawings.

2.02 GROUND RODS AND GRID

A. Ground rods shall be rolled to a commercially round shape from a welded copper-clad steel manufactured by the molten-welding process or by the electro-formed process (molecularly bonded). They shall have an ultimate tensile strength of 75,000 pounds per square inch (psi) and an elastic limit of 49,000 psi. The rods shall be not less than 3/4 inch in diameter by 10 feet in length; and the proportion of copper shall be uniform throughout the length of the rod. The copper shall have a minimum wall thickness of 0.010 inch at any point on the rod. Ground rods shall be UL 467 listed. The ground rods shall be manufactured by Erico Products, Blackburn, Harger or equal.

121922

B. Except where specifically indicated otherwise, all exposed non current-carrying metallic parts of electrical equipment, metallic raceway systems, grounding conductors in nonmetallic raceways and neutral conductors of wiring systems shall be grounded.

C. The ground connection shall be made at the main service equipment and shall be extended to the ground grid surrounding the structure. The ground grid shall also be connected to the point of entrance of the metallic water service. Connection to the water pipe shall be made by a suitable ground clamp or lug connection to a plugged tee. If flanged pipes are encountered, connection shall be made with the lug bolted to the street side of the flanged connection.

D. Where ground fault protection is employed, care shall be taken so that the connection of the ground and neutral does not interfere with the correct operation of the ground fault protection system.

2.03 FITTINGS

A. Grounding connections to equipment shall be bolted. Cable end connections shall be made by hydraulic crimp or exothermically welded. Split bolt type connectors are not acceptable. Fittings shall be UL 467 listed.

2.04 EQUIPMENT GROUNDING CONDUCTORS

A. An insulated equipment grounding conductor, which shall be separate from the electrical system grounded (neutral) conductor, shall be furnished and installed for all circuits. Insulation shall be of the same type as the ungrounded conductors in the raceway and shall be green in color. Equipment grounding conductors shall be furnished and installed in all conduits. Use of conduits as the MEC required equipment grounding conductor is not acceptable.

2.05 EQUIPMENT GROUNDS

A. Equipment grounds shall be solid and continuous from a connection at earth to all distribution panelboards. Ground connections at panelboards, outlets, equipment, and apparatus shall be made in an approved and permanent manner.

B. For all control panels, disconnect switches, and other electrical enclosures, equipment grounds and bonding jumpers shall be terminated individually on a ground bar or mechanical lugs. No wire nuts will be permitted.

2.06 GROUND BARS

A. Ground bars shall be furnished and installed where indicated on the Drawings and where required in the Specifications. Ground bars shall be tin-plated copper, ¼-inch thick (minimum) with hole pairs spaced for NEMA 2-hole cable termination lugs. The number of hole pairs shall be as required for the number of cables terminated, plus four (4) spares (minimum). Ground bars shall be provided with insulated mounting hardware.

2.07 EXOTHERMIC WELDS

A. All exothermic welding shall be completed per welding kit manufacturer's instructions. Exothermic welds shall be CadWeld by Erico, ThermoWeld, Harger or equal.

PART 3 – EXECUTION

3.01 INSTALLATION

A. Metal surfaces where grounding connections are to be made shall be clean and dry. Steel surfaces shall be ground or filed to remove all scale, rust, grease, and dirt. Copper and galvanized steel shall be cleaned with emery cloth to remove oxide before making connections.

B. Ground Grid

1. A main ground grid shall be provided for each structure and interconnecting structure grids consisting of driven ground rods as shown on the Drawings. Ground rods shall be driven straight down into the earth, or if objects are encountered, at an angle to avoid the obstruction.

2. The ground rods shall be interconnected by the use of copper cable sized as shown on the Drawings. The interconnecting cables shall be connected to ground rods by hydraulic crimp or exothermic weld where buried, and removable bolted clamp where shown to be installed in test wells. The grounding cables shall be installed after the excavations for the building have been completed and prior to the pouring of concrete for the footings, mats, etc. Copper "pigtails" shall be connected to the ground grid and shall enter the buildings and structure from the outside and shall be connected to steel structures, and equipment as described in this Section and as required to provide a complete grounding system. The copper pigtails shall be hydraulically crimped or exothermically welded to the ground grid and connected to building reinforcement steel by hydraulic crimp.

3. Grounding conductors shall be continuous between points of connection; splices shall not be permitted.

4. Where conductors are exposed and subject to damage from personnel, traffic, etc., conductors shall be installed in metal raceway. The raceway shall be bonded to the grounding system.

5. Where subsurface conditions do not permit use of driven ground rods to obtain proper ground resistance, rods shall be installed in a trench or plate electrodes shall be provided, as applicable and necessary to obtain proper values of resistance.

6. Buried hydraulic crimp connections, exothermic welds, and ground ring shall not be backfilled until inspected by Engineer.

C. Raceways

1. Conduit which enters equipment such as switchgear, motor control centers, transformers, panelboards, variable frequency drives, instrument and control panels, and similar equipment shall be bonded to the ground bus or ground lug, where provided, and as otherwise required by the MEC.

3.02 TESTING

A. All tests shall be performed in accordance with the requirements of the General Conditions and Division 01. The following tests are required:

1. Witnessed Shop Tests

a. None required.

2. Field Tests

a. Field testing shall be done in accordance with the requirements specified in the General Conditions, Division 01, and NETA Acceptance Testing Specifications, latest edition.

b. Fall of potential tests shall be performed on the ground grid per IEEE81 recommendations by a third party, independent testing firm. A fall of potential plot shall be submitted at the conclusion of testing for Engineer review. Documentation indicating the location of the rod and grounding system as well as the resistance and soil conditions at the time the measurements were made shall be submitted. Testing shall show that the ground grid has 5 ohms resistance or less. Due to soil conditions and/or unforeseen field conditions, ground resistances greater than 5 ohms may be acceptable if specifically approved in writing by the Engineer. Ground resistance measurements shall be made in normally dry weather not less than 48 hours after rainfall and with the ground grid under test isolated from other grounds.

c. Continuity tests for the grounding electrode conductor shall be performed. Test will be accepted when a resistance of less than 1 ohm is shown for this conductor.

END OF SECTION

NO TEXT ON THIS PAGE

ATTACHMENT V – 26 05 29 HANGERS AND SUPPORTS FOR ELECTRICAL SYSTEMS

DIVISION 26

ELECTRICAL

(FILED SUB BID REQUIRED)

SECTION 26 05 29

HANGERS AND SUPPORTS FOR ELECTRICAL SYSTEMS[1]

PART 1 – GENERAL

1.01 FILED SUB-BID REQUIREMENTS

A. This Section is part of the filed sub-bid for Division 26 – Electrical. See Section 26 05 00.

1.02 THE REQUIREMENT

A. The **ELECTRICAL SUBCONTRACTOR** shall furnish and install structural supports for mounting and installing all conduit, electrical equipment, lighting, alarm systems, instrumentation, and communications equipment furnished under this Contract.

B. Equipment shall be installed strictly in accordance with recommendations of the manufacturer and best practices of the trade resulting in a complete, operable, and safe installation. The **ELECTRICAL SUBCONTRACTOR** shall obtain written installation manuals from the equipment manufacturer prior to installation.

C. Support design for all nonstructural electrical components (e.g., conduit and other raceways, freestanding equipment, etc.) shall be provided in accordance with the governing Building Code and Section 01 73 23 – Anchorage and Bracing of Nonstructural Components.

D. Reference Section 26 05 00 – Basic Electrical Requirements.

1.03 CODES AND STANDARDS

A. Equipment and materials covered under this Section shall be designed, manufactured, and/or listed to the following standards as applicable:

1. ASTM A123 – Standard Specification for Zinc (Hot Dip Galvanized) Coatings on Iron and Steel Products.

2. ASTM A153 – Standard Specification for Zinc Coating (Hot Dip) on Iron and Steel Hardware.

---

1 Addendum No.5

3. ASTM A240 – Standard Specification for Chromium and Chromium-Nickel Stainless Steel Plate, Sheet, and Strip for Pressure Vessels and for General Applications.

4. ASTM A276 – Standard Specification for Steel Bars and Shapes

5. ASTM B783 – Standard Specification for Materials for Ferrous Powder Metallurgy Structural Parts

1.04 SUBMITTALS

A. In accordance with the procedures and requirements set forth in the General Conditions and Section 01 33 00 – Submittal Procedures, the **ELECTRICAL SUBCONTRACTOR** shall obtain from the equipment manufacturer and submit the following:

1. Shop drawings

2. Structural support calculations and designs in accordance with the governing Building Code and Section 01 73 23 – Anchorage and Bracing of Nonstructural Components

B. Each submittal shall be identified by the applicable Specification Section.

1.05 SHOP DRAWINGS

A. Each submittal shall be complete in all respects, incorporating all information and data listed herein and all additional information required for evaluation of the proposed equipment's compliance with the Contract Documents.

B. Partial, incomplete, or illegible submittals will be returned to the **ELECTRICAL SUBCONTRACTOR** without review for resubmittal.

C. Shop drawings shall include but not be limited to:

1. Product data sheets.

2. Complete assembly, layout, installation, and foundation drawings with clearly marked dimensions.

PART 2 – PRODUCTS

2.01 MANUFACTURERS

021523

A. The equipment covered by this Specification is intended to be standard equipment of proven performance as manufactured by reputable concerns. Equipment shall be

designed, constructed, and installed in accordance with the best practices of the trade, and shall operate satisfactorily when installed as shown on the Drawings.

2.02 MATERIALS

A. Support channel shall be 1-5/8” by 1-5/8” minimum, with 12 gage material thickness.

B. Support channel, support channel fittings, and threaded rod shall be furnished with the following material of construction, dependent upon the designation of the area in which they are to be installed.

Area Designation	Material of Construction
Indoor Wet Process Area	Type 304 Stainless Steel
Indoor Dry Process Area	Hot Dipped Galvanized Steel
Indoor Dry Non-process Area	Hot Dipped Galvanized Steel
Indoor Type 1 Chemical Storage/Transfer Area	Fiberglass
Indoor Type 2 Chemical Storage/Transfer Area	Type 304 Stainless Steel
All Outdoor Areas	Type 304 Stainless Steel

C. Fastening hardware (bolts, nuts, washers, and screws) shall be furnished with the following material of construction, dependent upon the designation of the area in which they are to be installed. Area designations are indicated on the Drawings.

Area Designation	Material of Construction
Indoor Wet Process Area	Type 304 Stainless Steel
Indoor Dry Process Area	Type 304 Stainless Steel
Indoor Dry Non-process Area	Type 304 Stainless Steel
Indoor Type 1 Chemical Storage/Transfer Area	Fiberglass
Indoor Type 2 Chemical Storage/Transfer Area	Type 304 Stainless Steel
All Outdoor Areas	Type 304 Stainless Steel

PART 3 – EXECUTION

3.01 INSTALLATION

A. Concrete or Masonry Inserts

1. The **ELECTRICAL SUBCONTRACTOR** shall be responsible for the furnishing and installation of all anchor bolts, masonry inserts, and similar devices required for installation of equipment furnished under this Contract.

2. If a time delay for the arrival of any special inserts or equipment drawings, etc. occurs, the **ELECTRICAL SUBCONTRACTOR** may, if permitted by the Engineer, make arrangements for providing approved recesses and openings in the concrete or masonry and, upon subsequent installation, the **ELECTRICAL SUBCONTRACTOR** shall be responsible for filling in such recesses and openings. Any additional costs that may be incurred by this procedure shall be borne by the **ELECTRICAL SUBCONTRACTOR**.

3. The **ELECTRICAL SUBCONTRACTOR** shall furnish leveling channels for all switchgear, switchboards, motor control centers, and similar floor mounted equipment. The leveling channels shall be provided for embedment in the equipment housekeeping pads. Coordination of the installation of these channels with the concrete pad is essential and required. Pad height shall be as required to

maintain concrete coverage of the reinforcement bars while not causing associated equipment to exceed the maximum mounting height requirements of the MEC.

B. Support Fastening and Locations

1. All equipment fastenings to columns, steel beams, and trusses shall be by beam clamps or welded. No holes shall be drilled in the steel.

2. Unless otherwise indicated on the Drawings or in the Specifications, guards/handrails shall not be utilized as supports for electrical equipment, devices, or appurtenances. Guards/handrails shall not be cut, drilled, or otherwise modified in order to accommodate electrical supports without written approval from the Engineer.

3. All holes made in reflected ceilings for support rods, conduits, and other equipment shall be made adjacent to ceiling grid bars where possible, to facilitate removal of ceiling panels.

4. Support channel shall be provided wherever required for the support of starters, switches, panels, and miscellaneous equipment.

5. All equipment, devices, and raceways that are installed on the dry side of a water bearing wall shall not be installed directly onto the wall. Support channel shall be used to allow ventilation air to pass behind the equipment, devices, or raceway.

6. All supports shall be rigidly bolted together and braced to make a substantial supporting framework. Where possible, control equipment shall be grouped together and mounted on a single framework.

7. Aluminum support members shall not be installed in direct contact with concrete. Stainless steel or non-metallic "spacers" shall be used to prevent contact of aluminum with concrete.

8. Actual designs for supporting framework should take the nature of a picture frame of support channels and bracket with a plate for mounting the components. The **ELECTRICAL SUBCONTRACTOR** is responsible for the design of supporting structure; **ELECTRICAL SUBCONTRACTOR** shall submit design details to the Engineer for acceptance before proceeding with the fabrication.

9. Wherever dissimilar metals come into contact, the **ELECTRICAL SUBCONTRACTOR** shall isolate these metals as required with neoprene washers, nine (9) mil polyethylene tape, or gaskets.

10. For all installations where fiberglass supporting materials are required, the **ELECTRICAL SUBCONTRACTOR** shall submit structural calculations and the

details of the proposed system of support. Structural calculations shall be signed and sealed by a registered Professional Engineer in the State or Commonwealth in which the project is located.

11. For the following installations where conduits are provided with a support system suspended from the above or attached to a vertical structure, the **ELECTRICAL SUBCONTRACTOR** shall submit structural calculations and details of the proposed system of support. Structural calculations shall be signed and sealed by a registered Professional Engineer in the State or Commonwealth in which the project is located.

    a. A quantity of twelve (12) or more conduits trade size 1” and smaller are proposed for a conduit support rack.

    b. A quantity of eight (8) or more conduits trade sizes 1 ½” to 2 1/2” are proposed for a conduit support rack.

    c. A quantity of four (4) or more conduits trade sizes 3” and larger are proposed for a conduit support rack.

12. Single conduits installed exposed along walls and ceilings shall be secured to the wall or ceiling with a one-hole conduit clamp and clamp-back. Where multiple conduits are installed exposed together, support channel and conduit clamps shall be used.

C. Equipment, boxes, and enclosures which are factory-constructed with integral mounting provisions (such as brackets., mounting feet, bolt holes, etc.) shall be installed/supported utilizing those mounting provisions. Equipment, boxes and enclosures shall not be field-modified by any means which compromises the UL listing or NEMA rating of the enclosure/assembly.

END OF SECTION

ATTACHMENT W – 26 05 33.13 CONDUIT FOR ELECTRICAL SYSTEMS

DIVISION 26

ELECTRICAL

(FILED SUB BID REQUIRED)

SECTION 26 05 33.13
CONDUIT FOR ELECTRICAL SYSTEMS[1]

PART 1 – GENERAL

1.01 FILED SUB-BID REQUIREMENTS

A. This Section is part of the filed sub-bid for Division 26 – Electrical. See Section 26 05 00.

1.02 THE REQUIREMENT

A. The **ELECTRICAL SUBCONTRACTOR** shall furnish and install conduits and conduit fittings to complete the installation of all electrically operated equipment as specified herein, indicated on the Drawings, and as required.

B. Requirements for conduit clamps, support systems, and anchoring are not included in this Section. Reference Section 26 05 29 – Hangers and Supports for Electrical Systems, for these requirements.

C. Reference Section 26 05 00 – Basic Electrical Requirements.

D. Reference Section 31 71 19 – Underground Electrical.

1.03 CODES AND STANDARDS

A. Conduits and conduit fittings shall be designed, manufactured, and/or listed to the following standards as applicable:

1. American National Standards Institute (ANSI)

    a. ANSI B1.20.1 – Pipe Threads, General Purpose

    b. ANSI C80.1 – Electrical Rigid Steel Conduit

    c. ANSI C80.3 – Steel Electrical Metallic Tubing

    d. ANSI FB 1 – Fittings, Cast Metal Boxes, and Conduit Bodies for Conduit, Electrical Metallic Tubing, and Cable

[1] Addendum No.5

2. Underwriters Laboratories (UL)

    a. UL 1 – Standard for Flexible Metal Conduit

    b. UL 6 – Electrical Rigid Metal Conduit-Steel

    c. UL 6A – Electrical Rigid Metal Conduit-Aluminum, Red Brass, and Stainless Steel

    d. UL 360 – Standard for Liquid-tight Flexible Metal Conduit

    e. UL 467 – Grounding and Bonding Equipment

    f. UL 514B – Conduit, Tubing, and Cable Fittings

    g. UL 651 – Standard for Schedule 40 and 80 Conduit and Fittings

    h. UL 797 – Electrical Metallic Tubing-Steel

    i. UL 1479 – Standard for Fire Tests of Penetration Fire Stops

    j. UL 1660 – Liquid-tight Flexible Nonmetallic Conduit

3. National Electrical Manufacturer's Association (NEMA)

    a. NEMA FB 2.40 – Installation Guidelines for Expansion and Expansion/Deflection Fittings

    b. NEMA RN 1 – PVC Externally Coated Galvanized Rigid Steel Conduit

    c. NEMA RV-3 – Application and Installation Guidelines for Flexible and Liquid-tight Flexible Metal and Nonmetallic Conduits

    d. NEMA TC-2 – Electrical PVC Conduit

    e. NEMA TC-3 – PVC Fittings for Use with Rigid PVC Conduit and Tubing

4. National Electrical Contractors Association (NECA)

    a. NECA 1 – Standard for Good Workmanship in Electrical Construction

5. Others

    a. ACI-318 – Building Code Requirements for Structural Concrete

121922

1.04 SUBMITTALS

A. In accordance with the procedures and requirements set forth in the General Conditions and Section 01 33 00 – Submittal Procedures, the **ELECTRICAL SUBCONTRACTOR** shall obtain from the equipment manufacturer and submit the following:

1. Shop Drawings

B. Each submittal shall be identified by the applicable Specification Section.

1.05 SHOP DRAWINGS

A. Each submittal shall be complete in all respects, incorporating all information and data listed herein and all additional information required for evaluation of the proposed equipment's compliance with the Contract Documents.

B. Partial, incomplete, or illegible submittals will be returned to the **ELECTRICAL SUBCONTRACTOR** without review for resubmittal.

C. Shop drawings shall include but not be limited to:

1. Product data sheets for conduits and fittings.

2. Conduit identification methods and materials.

3. Evidence of training for all personnel that will install PVC coated rigid metal conduit.

1.06 DEFINITIONS

A. Conduits are categorized by the circuit type of the wiring to be installed inside. Conduits are defined as follows:

1. Power Conduits – Conduits that carry AC or DC power wiring from a source to a load. Conduits that carry lighting and receptacle wiring.

2. Control Conduits – Conduits that carry AC or DC discrete control wiring between devices and/or equipment. Conduits that carry fiber optic cables between devices and/or equipment.

3. Instrumentation Conduits – Conduits that carry AC or DC analog signal wiring between devices and/or equipment. Conduits that carry Category 5e or Category 6 unshielded twisted-pair cables.

B. Conduit categories are indicated on the Drawings by the leading letter of the conduit tag. Conduit tag leading letters are defined as follows:

1. P – Power Conduit

2. C – Control Conduit

3. I – Instrumentation Conduit

PART 2 – PRODUCTS

2.01 GENERAL

A. Conduit and conduit fitting products are specified in the text that follows this article. Reference Part 3 herein for the application, uses and installation requirements of these conduits and conduit fittings.

B. All metallic conduit fittings shall be UL 514B and UL 467 Listed and constructed in accordance with ANSI FB 1. All metallic conduit fittings for use in Class I Division I hazardous areas shall be UL 1203 Listed. All non-metallic fittings shall be UL 651 Listed and constructed in accordance with NEMA TC-3.

C. Where threading is specified herein for conduit fitting connections, the fittings shall be manufactured to accept conduit that is threaded to ANSI B1.20.1 requirements.

D. Conduit expansion fittings for all conduit materials of construction shall be capable of 4 inches of movement along the axis of the conduit for trade sizes 2 inches or less. Expansion fittings shall be capable of 8 inches of movement along the axis of the conduit for trade sizes greater than 2 inches.

E. Conduit deflection fittings for all conduit materials of construction shall be provided with a flexible neoprene outer jacket that permits up to ¾ inch of expansion/contraction along the axis of the conduit as well as up to ¾ inch of parallel misalignment between the conduit axes. Outer jacket shall be secured to the conduit hubs by stainless steel clamps.

F. Conduit seals shall either be Listed and labeled for 40% fill, or conduit reducing fittings and a trade size larger conduit seal shall be provided to achieve 25% or less fill within the seal. Percentage fill calculation shall be based on the conductors to be installed. Conduit seals shall be provided with breathers and/or drains where required by the MEC.

G. Conduit insulating bushings shall be constructed of plastic and shall have internal threading.

H. Additional conduit and conduit fitting requirements are specified in the articles that follow based on the specific conduit material of construction to be used.

2.02 RIGID GALVANIZED STEEL (RGS) CONDUIT AND ASSOCIATED FITTINGS

A. Conduit

1. Conduit shall be hot dip galvanized on the inside and outside and made of heavy wall high strength ductile steel. Conduit shall be manufactured in accordance with ANSI C80.1 and shall be UL 6 Listed.

2. Conduit shall be provided with factory-cut 3/4 inch per foot tapered threads at each end in accordance with ANSI B1.20.1. Threads shall be cut prior to galvanizing to ensure corrosion protection adequately protects the threads. Conduit shall be provided with a matching coupling on one end and a color-coded thread protector on the other.

B. Conduit Bodies for use with Rigid Galvanized Steel

1. Conduit bodies shall be constructed of an electro-galvanized malleable iron alloy which is coated with an acrylic paint finish. Conduit bodies shall have integral threaded conduit hubs.

2. Conduit bodies for Class I Division I hazardous areas shall be provided with integrally threaded covers constructed of an electro-galvanized malleable iron alloy which is coated with an acrylic paint finish.

3. Conduit bodies for all other areas shall be provided with covers that are affixed in place by stainless steel screws which thread directly into the conduit body. Covers that utilize wedge nuts or any other method of attachment to the conduit body are not acceptable. Covers shall be constructed of an electro-galvanized malleable iron alloy which is coated with an acrylic paint finish. Covers shall be provided with matching gasket.

C. Conduit Couplings, Nipples, and Unions for use with Rigid Galvanized Steel

1. Couplings and nipples shall be threaded and shall be constructed of hot dipped galvanized steel. Split-type couplings that use compression to connect conduits are not acceptable.

2. Unions shall be threaded, rain-tight, and constructed of an electro-galvanized malleable iron alloy which is coated with an acrylic paint finish.

D. Conduit Expansion and Deflection Fittings for use with Rigid Galvanized Steel

1. Conduit expansion fittings and conduit deflection fittings shall be constructed of bronze or an electro-galvanized malleable iron alloy. Expansion and deflection fittings shall have threaded conduit connections.

2. Expansion fittings shall have an integral bonding jumper and deflection fittings shall have an external bonding jumper.

E. Conduit Seals for use with Rigid Galvanized Steel

1. Conduit seals shall be constructed of an electro-galvanized malleable iron alloy which is coated with an acrylic paint finish. Conduit seals shall have threaded conduit connections.

F. Conduit Termination Fittings for use with Rigid Galvanized Steel

1. Conduit hubs shall be constructed of stainless steel and shall have threaded connections to the conduit and enclosure. Hubs shall have a plastic insulated throat and shall be watertight when assembled to an enclosure.

2. Conduit locknuts shall be constructed of zinc plated steel. Locknuts shall have internal threading. Locknuts with integral gasket or seal are not acceptable. Locknuts shall have integral bonding screw where required for proper bonding.

3. Conduit bonding bushings shall be constructed of zinc plated malleable iron. Bonding bushings shall have a threaded conduit connection. Bonding bushing shall be provided with properly sized set screw for connecting bonding conductor and an integral plastic insulator rated for 150 degrees C located in the throat.

2.03 RIGID NONMETALLIC CONDUIT AND ASSOCIATED FITTINGS

A. Conduit

1. Conduit shall be Schedule 40 or 80 (dependent on application) polyvinyl chloride (PVC) construction, manufactured in accordance with NEMA TC-2, UL 651 Listed, and suitable for conductors with 90 degree C insulation.

B. Conduit Bodies for use with Rigid Nonmetallic Conduit

1. Conduit bodies shall be constructed of PVC. Conduit hubs shall be integral to the conduit body and shall be smooth inside to accept a glued conduit connection.

2. Conduit body shall be provided with cover that is affixed in place by stainless steel screws which thread directly into the conduit body. Covers that utilize wedge nuts or any other method of attachment to the conduit body are not acceptable. Covers shall be provided with matching gasket.

C. Conduit Couplings and Unions for use with Rigid Nonmetallic Conduit

1. Conduit couplings and unions shall be constructed of PVC and shall be smooth inside to accept a glued conduit connection.

D. Conduit Expansion and Deflection Fittings for use with Rigid Nonmetallic Conduit

1. Conduit expansion fittings and conduit deflection fittings shall be constructed of PVC and shall be smooth inside to accept a glued conduit connection.

E. Conduit Termination Fittings for use with Rigid Nonmetallic Conduit

1. Conduit hubs shall be constructed of PVC and shall be smooth inside to accept a glued conduit connection. Hubs shall have external threads and an accompanying PVC locknut, and shall be watertight when assembled to an enclosure.

2. Conduit locknuts shall be constructed of zinc plated steel. Locknuts shall have internal threading. Locknuts constructed of PVC and locknuts with integral gasket or seal are not acceptable.

3. Conduit end bells shall be constructed of PVC and shall be smooth inside to accept a glued conduit connection. End bell shall have a smooth inner surface that curves outward towards the edge of the fitting.

2.04 PVC COATED RIGID GALVANIZED STEEL CONDUIT AND ASSOCIATED FITTINGS

A. General

1. Where an external coating of polyvinyl chloride (PVC) is specified for conduit and fittings, the coating shall be 40 mil (minimum) thickness. Where an internal coating of urethane is specified for conduit and fittings, the coating shall be 2 mil (minimum) thickness.

2. All conduit fittings shall have a sealing sleeve constructed of PVC which covers all connections to conduit. Sleeves shall be appropriately sized so that no conduit threads will be exposed after assembly.

B. Conduit

1. Conduit shall be hot dip galvanized on the inside and outside and made of heavy wall high strength ductile steel. Conduit shall be manufactured in accordance with ANSI C80.1 and shall be UL 6 Listed.

2. Conduit shall be provided with factory-cut 3/4 inch per foot tapered threads at each end in accordance with ANSI B1.20.1. Threads shall be cut prior to galvanizing to ensure corrosion protection adequately protects the threads. Conduit shall be provided with a matching coupling on one end and a color-coded thread protector on the other.

3. Conduit shall be coated on the exterior with a PVC jacket and coated on the interior with a layer of urethane. Conduit shall be manufactured in accordance with NEMA RN 1.

C. Conduit Bodies for use with PVC Coated Rigid Galvanized Steel Conduit

1. Conduit bodies shall be constructed of an electro-galvanized malleable iron alloy which is coated on the exterior with a PVC jacket and coated on the interior with a layer of urethane. Conduit bodies shall have integral threaded conduit hubs.

2. Conduit bodies for Class I Division I hazardous areas shall be provided with integrally threaded covers constructed of an electro-galvanized malleable iron alloy which is coated on the exterior with a PVC jacket and coated on the interior with a layer of urethane.

3. Conduit bodies for all other areas shall be constructed of an electro-galvanized malleable iron alloy which is coated on the exterior with a PVC jacket and coated on the interior with a layer of urethane. Covers shall be affixed in place by stainless steel screws which thread directly into the conduit body and have a plastic encapsulated head. Covers that utilize wedge nuts or any other method of attachment to the conduit body are not acceptable. Covers shall be provided with matching gasket.

D. Conduit Couplings, Nipples, and Unions for use with PVC Coated Rigid Galvanized Steel Conduit

1. Couplings and nipples shall be threaded and shall be constructed of hot dipped galvanized steel which is coated on the exterior with a PVC jacket and coated on the interior with a layer of urethane. Split-type couplings that use compression to connect conduits are not acceptable.

2. Unions shall be threaded, rain-tight, and constructed of an electro-galvanized malleable iron alloy which is coated on the exterior with a PVC jacket and coated on the interior with a layer of urethane.

E. Conduit Expansion and Deflection Fittings for use with PVC Coated Rigid Galvanized Steel Conduit

1. Conduit expansion fittings and conduit deflection fittings shall be constructed of bronze or an electro-galvanized malleable iron alloy which is coated on the exterior with a PVC jacket and coated on the interior with a layer of urethane. Expansion and deflection fittings shall have threaded conduit connections.

2. Expansion fittings shall have an integral bonding jumper and deflection fittings shall have an external bonding jumper.

F. Conduit Seals for use with PVC Coated Rigid Galvanized Steel Conduit

1. Conduit seals shall be constructed of an electro-galvanized malleable iron alloy which is coated on the exterior with a PVC jacket and coated on the interior with a layer of urethane. Conduit seals shall have threaded conduit connections.

G. Conduit Termination Fittings for Use with PVC Coated Rigid Galvanized Steel Conduit

1. Conduit hubs shall be constructed of an electro-galvanized malleable iron alloy which is coated on the exterior with a PVC jacket and coated on the interior with a layer of urethane. Hubs shall have threaded connections to the conduit and

enclosure. Hubs shall have a plastic insulated throat and shall be watertight when assembled to an enclosure.

2. Conduit bonding bushings shall be constructed of zinc plated malleable iron which is coated on the exterior with a PVC jacket and coated on the interior with a layer of urethane. Bonding bushings shall have a threaded conduit connection. Bonding bushing shall be provided with properly sized set screw for connecting bonding conductor and an integral plastic insulator rated for 150 degrees C located in the throat.

2.05 LIQUID TIGHT FLEXIBLE METAL CONDUIT (LFMC) AND ASSOCIATED FITTINGS

A. Conduit

1. Conduit shall be manufactured using a single strip of hot dip galvanized high strength steel alloy, helically formed into a continuously interlocked flexible metal conduit. Trade size 1-1/4 inch and smaller conduits shall be provided with an integrally woven copper bonding strip.

2. Conduit shall be covered with an outside PVC jacket that is UV resistant, moisture-proof, and oil-proof. Conduit shall be UL 360 Listed. Conduits shall be Listed for and marked with maximum temperature ratings as follows:

   a. 105 degrees C dry, 60 degrees C wet for all conduit installed against or within 2 inches of equipment capable of having a surface temperature of 80 degrees C or greater (e.g. blowers, incinerators, etc)

   b. 80 degrees C dry, 60 degrees C wet for all other locations

B. Conduit Termination Fittings for use with LFMC

1. Conduit termination fittings shall be constructed of either 304 stainless steel or an electro-galvanized malleable iron alloy which is coated on the exterior with a 40 mil (minimum) PVC jacket and coated on the interior with a 2 mil (minimum) layer of urethane. PVC coated fittings shall have a sealing sleeve constructed of PVC which covers the connection to conduit.

2. Termination fittings shall have a threaded end with matching locknut and sealing ring for termination to equipment and shall have an integral external bonding lug where required for proper bonding. Termination fittings shall have a plastic insulated throat and shall be watertight when assembled to the conduit and equipment.

2.06 LIQUID TIGHT FLEXIBLE NONMETALLIC CONDUIT (LFNC) AND ASSOCIATED FITTINGS

A. Conduit

1. Conduit shall be constructed of rigid polyvinyl chloride (PVC), fabricated to provide flexibility. Conduit shall be covered with an outside PVC jacket that is UV resistant, moisture-proof, and oil-proof. Conduit shall be UL 1660 Listed and be Type LFNC-B.

B. Conduit Termination Fittings for use with LFNC

1. Conduit termination fittings shall be constructed PVC and shall have a threaded end with matching locknut and sealing ring for termination to equipment. Termination fittings shall be watertight when assembled to the conduit and equipment.

2.07 FLEXIBLE METAL CONDUIT (FMC) AND ASSOCIATED FITTINGS

A. Conduit

1. Conduit shall be manufactured using a single strip of hot dip galvanized high strength steel alloy, helically formed into a continuously interlocked flexible metal conduit. Conduit shall be UL 1 Listed.

B. Conduit Termination Fittings for use with FMC

1. Conduit termination fittings shall be constructed of an electro-galvanized malleable iron alloy. Fittings shall have a threaded end with matching locknut for termination to equipment, and a compression-style connection to the associated conduit.

2.08 ELECTRICAL METALLIC TUBING (EMT) AND ASSOCIATED FITTINGS

A. Conduit

1. Conduit shall be hot dipped galvanized on the inside and outside and made of cold-rolled steel tubing. Conduit shall be manufactured in accordance with C80.3 and shall be UL 797 listed.

B. Conduit Bodies for use with EMT

1. Conduit bodies shall be constructed of an electro-galvanized malleable iron alloy which is coated with an acrylic paint finish. Conduit bodies shall have integral threaded conduit hubs.

2. Conduit bodies shall be provided with galvanized sheet steel covers that are affixed in place by stainless steel screws which thread directly into the conduit body. Covers that utilize wedge nuts or any other method of attachment to the conduit body are not acceptable. Covers shall be provided with matching gasket.

C. Conduit Couplings and Nipples for use with EMT

1. Couplings and nipples shall have threaded compression connectors with associated gland and shall be constructed of electro-galvanized steel. Fittings utilizing a set screw or indenter tool to secure the associated conduit to the fitting are not acceptable. Couplings and nipples shall be rain-tight and have a plastic insulated throat.

D. Conduit Expansion and Deflection Fittings for use with EMT

1. Conduit expansion fittings and conduit deflection fittings shall be constructed of an electro-galvanized malleable iron alloy which is coated with an acrylic paint finish. Expansion and deflection fittings shall have threaded conduit connections.

2. Expansion fittings shall have an integral bonding jumper and deflection fittings shall have an external bonding jumper.

E. Conduit Termination Fittings for use with EMT

1. Conduit termination fittings shall be constructed of electro-galvanized steel and have a plastic insulated throat. Termination fittings shall have a threaded compression connector with associated gland on one end and external threads on the other end. Termination fittings utilizing a set screw or indenter tool to secure the associated conduit to the fitting are not acceptable.

2. Conduit locknuts shall be constructed of zinc plated steel. Locknuts shall have internal threading. Locknuts shall have integral bonding screw where required for proper bonding.

2.09 CONDUIT BENDS

A. Rigid conduit bends, both factory-fabricated and field-fabricated, shall meet the same requirements listed in the articles above for the respective conduit type and material of construction.

B. Conduit bend radii for standard radius bends shall be no less than as follows:

Trade Size (inches)	3/4	1	1-1/4	1-1/2	2	2-1/2	3	3-1/2	4	5	6
Min. Radius (inches)	4-1/2	5-3/4	7-1/4	8-1/4	9-1/2	10-1/2	13	15	16	24	30

C. Conduit bend radii for long radius bends shall be no less than as follows:

Trade Size (inches)	3/4	1	1-1/4	1-1/2	2	2-1/2	3	3-1/2	4	5	6
Min. Radius (inches)	N/A	12	18	24	30	30	36	36	48	48	60

2.10 MISCELLANEOUS

A. Conduit Periphery Sealing

1. The sealing of the exterior surface of conduits to prevent water and/or air from passing around the conduit periphery from one space to another (where required) shall be through the use of one of the following:

    a. A conduit sleeve and pressure bushing sealing system. Acceptable products are FSK by OZ-GEDNEY, Link-Seal by Crouse-Hinds, Atkore or Engineer approved equal.

    b. A conduit sleeve that is two trade sizes larger than the conduit being sealed, with 2-hour fire rated UL 1479 Listed caulk filling the entire void between the conduit and sleeve. This method is only suitable for penetrations in non-fire rated walls and floors between spaces within buildings. This method shall not be used for the sealing of conduits leaving a building and/or structure.

2. Conduit penetrations through fire-rated walls and floors shall be made with an approved UL 1479 Listed product specifically intended for the trade size of the conduit.

B. Primer and Cement

1. Nonmetallic conduit shall be cleaned with primer and connected to fittings with the manufacturer's recommended cement that is labeled Low VOC.

C. Galvanizing Compounds

1. Galvanizing compounds for field application shall be the cold-applied type, containing no less than 93% pure zinc.

D. Conduit Interior Sealing

1. For all conduits that have cables inside, the sealing of the inside of the conduits against water ingress shall be achieved through the use of one of the following:

    a. Two-part expanding polyurethane foam sealing compound, dispensed from a single tube which mixes the two parts as it is injected into the conduit. Expanding foam shall be compatible with the conduit material of construction as well as the outer jacket of the cables in the conduit. Acceptable products are Q-Pak 2000 by Chemque, FST by American Polywater Corporation, or Hydra-seal S-60 by Duraline.

    b. Inflatable bag that provides seal around cables and around inside diameter of conduit. Provide appropriate quantity of additional fittings for applications with three or more cables in the conduit to be sealed. Acceptable products

are Rayflate by Raychem, or Engineer approved equal. This sealing method is only applicable to conduits trade size 2 inch and larger.

c. Neoprene sealing ring provided with the required quantity and diameter of holes to accommodate the cables in each conduit. Sealing ring shall be compressed by two stainless steel pressure plates. Acceptable products are type CSB by OZ-GEDNEY, or Engineer approved equal. This sealing method is only applicable to metallic conduits containing 4 or less cables.

2. The use of aerosol-based expanding foam sealants or any other method of sealing against water ingress not listed above is not acceptable.

3. For conduits identified as spares, the sealing of the inside of the conduit against water ingress shall be achieved by using appropriately sized rubber expanding-style conduit plugs. Plugs that are held in place only by friction are not acceptable.

E. Pull Rope

1. Pull ropes for empty and/or spare conduits shall be woven polyester, ½-inch wide, with a minimum tensile strength of 1250 lbs.

2. Pull ropes for the **ELECTRICAL SUBCONTRACTOR'S** use in installing conductors shall be the size and strength required for the pull and shall be made of a non-metallic material.

PART 3 – EXECUTION

3.01 GENERAL

A. All conduit and associated fittings and appurtenances shall be installed in accordance with NECA 1.

B. Minimum trade size for all rigid conduits shall be 3/4 inch in exposed applications and 1 inch in embedded applications. Conduits installed within ductbanks shall be allowed to be increased in size to trade size 2 inch, at the **ELECTRICAL SUBCONTRACTOR**'s option, to accommodate the saddle size of the ductbank spacers. However, no combining of circuits shall be allowed in the larger conduits.

C. Minimum trade size for flexible conduits (where specifically allowed herein) shall be 1/2 inch in all applications.

D. Conduit routing and/or homeruns are shown on the Drawings. The line type used on the Drawings indicates which conduits shall be installed concealed and which shall be installed exposed.

E. Empty and/or spare conduits shall be provided with pull ropes which have no less than 12 inches of slack at each end.

F. Nonmetallic conduits for installations requiring less than a factory length of conduit shall be field cut to the required length. The cut shall be made square, cleaned of debris, and primer shall be applied to ready each joint for fusing. Conduits shall then be fused together with the conduit manufacturer's approved cement compound.

G. Metallic conduits for installations requiring less than a factory length of conduit shall be field cut to the required length. The cut shall be made square, be cleaned of all debris and be de-burred, then threaded. Conduit threading performed in the field shall be ¾ inch per foot tapered threads in accordance with ANSI B1.20.1.

H. Conduits shall be protected from moisture, corrosion, and physical damage during construction. Install dust-tight and water-tight conduit fittings on the ends of all conduits immediately after installation and do not remove until conductors are installed.

I. Conduits shall be installed to provide no less than 12 inches clearance from pipes that have the potential to impart heat upon the conduit. Such pipes include, but are not limited to, hot water pipes, steam pipes, exhaust pipes, and blower air pipes. Clearance shall be maintained whether conduit is installed in parallel or in crossing of pipes.

J. Where non-metallic instrumentation conduits are installed exposed, the following clearances to other conduit types shall be maintained:

1. Instrumentation conduits installed parallel to conduits with conductors energized at 480V or above shall be 18 inches.

2. Instrumentation conduits installed parallel to conduits with conductors energized at 240V and below shall be 12 inches.

3. Instrumentation conduits installed at right angles to conductors energized at 480V and below shall be 6 inches.

4. Instrumentation conduits installed at right angles to conductors energized at voltages above 480V shall be 12 inches.

K. Where conduit fittings do not include an integral insulated bushing, an insulated bushing shall be installed at all conduit termination points.

L. Conduits which serve multi-section equipment shall be terminated in the section where wiring terminations will be made.

M. Conduits shall not penetrate the floors or walls inside liquid containment areas without specific written authorization from the Engineer. Liquid containment areas are indicated on the Drawings.

N. Conduits that terminate at roof mounted equipment shall be installed through the roof curb for the associated equipment to avoid additional roof penetrations wherever possible. Conduits that are installed horizontally on roof surfaces shall be supported by roof blocks that do not impact the roof manufacturer's warranty and shall be installed at

least 7/8 inch above the roof surface to avoid the need to further de-rate the conductors inside.

O. In no case shall conduit be supported or fastened to another pipe or be installed in a manner that would prevent the removal of other pipes for repairs. Spring steel fasteners may only be used to affix conduits containing lighting branch circuits within EMT conduits to structural steel members.

P. All field fabricated threads for rigid galvanized steel conduit shall be thoroughly coated with two coats of galvanizing compound, allowing at least two minutes to elapse between coats for proper drying.

Q. The appropriate specialized tools shall be used for the installation of PVC coated conduit and conduit fittings. No damage to the PVC coating shall occur during installation. Conduit and conduit fittings with damaged PVC coating shall be replaced at the **ELECTRICAL SUBCONTRACTOR**'s cost. The use of PVC coating touch-up compounds is not permitted.

R. Conduits which emerge from within or below concrete encasement shall be PVC coated rigid galvanized steel in accordance with Standard Detail E-26-0102 where the conduit is not protected by an equipment enclosure that surrounds the conduit on all sides at the point where it emerges from the encasement.

3.02 CONCEALED AND EMBEDDED CONDUITS

A. Conduits are permitted to be installed concealed and/or embedded with the following requirements:

1. Conduits shall not be installed horizontally when concealed within CMU walls, only vertical installation is acceptable.

2. Conduits installed embedded within concrete floors or walls shall be located so as not to affect the designed structural strength of the floor or wall. Embedded conduits shall be installed in accordance with Standard Detail S-03-0403 and ACI-318.

3. Where conduit bends emerge from concrete embedment, none of the curved portion of the bend shall be visible. Only the straight portion of the bend shall be visible. The straight portion shall emerge perpendicular to the embedment (i.e. neatly oriented 90-degrees to floor/slab/grade). Conduits that emerge in a non-perpendicular orientation are not acceptable.

4. Where multiple conduits emerge from concrete embedment or from concealment below a concrete floor, ample clear space shall be provided between conduits to allow for the appropriate and required conduit termination fittings to be installed.

5. Conduits installed embedded within concrete encasement of any kind shall be installed such that conduit couplings for parallel conduits are staggered so that they are not side by side.

B. Conduits are NOT permitted to be installed concealed and/or embedded for the following situations:

1. Conduits shall not be installed embedded within any water-bearing floors or walls. Conduits shall not be installed embedded within any liquid containment area floors or walls.

2. Conduits shall not be installed concealed within CMU walls or gypsum walls that are adjacent to Class I and II hazardous areas (Division I and Division II).

3. Conduits shall not be installed concealed within CMU walls or gypsum walls that are adjacent to indoor Type 1 or Type 2 chemical storage/transfer areas.

3.03 CONDUIT USES AND APPLICATIONS

A. Rigid Conduit

1. Rigid conduit for non-hazardous areas shall be furnished and installed in the materials of construction as follows. Area designations are indicated on the Drawings.

Rigid Conduit for Non-Hazardous Areas

Installation Area Designation / Scenario	Conduit Category by Wiring / Circuit Type	
	Power and Control	**Instrumentation**
Exposed in indoor wet process areas	Rigid galvanized steel conduit	Same as Power and Control
Exposed in indoor dry process areas	Rigid galvanized steel conduit	Same as Power and Control
Exposed in indoor dry non-process areas	Rigid galvanized steel conduit	Same as Power and Control
Exposed in indoor Type 1 chemical storage/transfer areas	Schedule 80 rigid non-metallic PVC conduit	Same as Power and Control
Exposed in indoor Type 2 chemical storage/transfer areas	PVC coated rigid galvanized steel conduit	Same as Power and Control
Exposed in outdoor areas	PVC coated rigid galvanized steel conduit	Same as Power and Control
Exposed within pre-fabricated electrical equipment center buildings	Electrical Metallic Tubing	Same as Power and Control
Concealed within underground direct-bury or concrete-encased ductbanks	Schedule 40 rigid non-metallic PVC conduit	Rigid galvanized steel conduit
Concealed within non-elevated (i.e. "slab-on-grade" construction) concrete slabs	Schedule 40 rigid non-metallic PVC conduit	Rigid galvanized steel conduit
Concealed within elevated concrete slabs	Rigid galvanized steel conduit	Same as Power and Control
Concealed below concrete slabs (within earth or fill material)	Schedule 40 rigid non-metallic PVC conduit	Rigid galvanized steel conduit
Concealed within concrete walls	Schedule 40 rigid non-metallic PVC conduit	Rigid galvanized steel conduit

Rigid Conduit for Non-Hazardous Areas

Installation Area Designation / Scenario	Conduit Category by Wiring / Circuit Type	
	Power and Control	**Instrumentation**
Concealed within CMU walls	Schedule 40 rigid non-metallic PVC conduit or Electrical Metallic Tubing	Electrical Metallic Tubing
Concealed above suspended ceilings	Electrical Metallic Tubing	Same as Power and Control
Concealed within interior walls constructed of metal studs and gypsum wall board	Electrical Metallic Tubing	Same as Power and Control
Emerging from concealment within or below a concrete floor and transitioning to exposed conduit (Reference Detail E-26-0102)	PVC coated rigid galvanized steel conduit	Same as Power and Control

2. The tables for the materials of construction for rigid conduits are intended to exhaustively cover all possible scenarios and installation areas under this Contract. However, if a scenario or installation area is found that is not explicitly governed by these tables, it shall be assumed for bid purposes that the conduit material of construction is to be rigid galvanized steel. This discrepancy shall be brought to the attention of the Engineer (in writing) immediately for resolution.

B. Conduit Bends

1. All conduit bends shall be the same material of construction as the rigid conduit listed in the tables above, with the following exceptions:

   a. All 90-degree bends or combinations of adjacent bends that form a 90-degree bend where concealed within concrete or below a concrete slab shall be rigid galvanized steel.

2. Field fabricated bends of metallic conduit shall be made with a bending machine and shall have no kinks. Field fabricated standard radius and long radius bends shall have minimum bending radii in accordance with the associated tables in Part 2 herein.

3. Field bending of non-metallic conduits is not acceptable, factory fabricated bends shall be used.

4. Long radius bends shall be furnished and installed for the following specific applications, all other bends shall be standard radius:

a. All conduits containing medium voltage cable.

b. All conduits containing fiber optic cable.

c. Where specifically indicated on the Drawings.

C. Flexible Conduit

1. Flexible conduit shall only be installed for the limited applications specified herein. Flexible conduit shall not be installed in any other application without written authorization from the Engineer. Acceptable applications are as follows:

   a. Connections to motors and engine-generator sets (and similar vibrating equipment)

   b. Connections to solenoid valves and limit switches

   c. Connections to lighting fixtures installed in suspended ceilings

   d. Connections to lighting transformers and combination power units

   e. Connections to pre-fabricated equipment skids

   f. Connections to HVAC equipment

   g. Connections to instrument transmitters and elements

   h. Where specifically indicated in the Standard Details

2. Flexible conduit length shall be limited to three (3) feet, maximum. Flexible conduit shall not be installed buried or embedded within any material.

3. Unless otherwise specified herein, flexible conduits shall be installed in accordance with the Installation Guidelines published within NEMA RV-3.

4. Flexible conduit for non-hazardous areas shall be furnished and installed in the materials of construction as follows. Area designations are indicated on the Drawings.

Flexible Conduit for Non-Hazardous Areas

Installation Area Designation / Scenario	**Conduit Category by Wiring / Circuit Type**	
	Power and Control	**Instrumentation**
Exposed in indoor wet process areas	Liquid-tight flexible metal conduit	Same as Power and Control

Flexible Conduit for Non-Hazardous Areas

Installation Area Designation / Scenario	Conduit Category by Wiring / Circuit Type	
	Power and Control	**Instrumentation**
Exposed in indoor dry process areas	Liquid-tight flexible metal conduit	Same as Power and Control
Exposed in indoor dry non-process areas	Flexible metal conduit	Same as Power and Control
Exposed in indoor Type 1 chemical storage/transfer areas	Liquid-tight flexible non-metallic conduit	Same as Power and Control
Exposed in indoor Type 2 chemical storage/transfer areas	Liquid-tight flexible metal conduit	Same as Power and Control
Exposed in outdoor areas	Liquid-tight flexible metal conduit	Same as Power and Control
Concealed above suspended ceilings (all indoor areas)	Same material as exposed conduit in same area	Same as Power and Control

3.04 CONDUIT FITTING USES AND APPLICATIONS

A. General

1. Conduit fittings shall be furnished and installed in the materials of construction as indicated in Part 2, herein. Conduit fitting materials of construction are dependent on the material of construction used for the associated conduit.

2. Conduit fittings shall be provided in the trade size and configuration required to suit the application.

B. Conduit Bodies

1. Conduit bodies shall be installed where wire pulling points are desired or required, or where changes in conduit direction or breaking around beams is required.

2. Where conduit bodies larger than trade size 2 inches are intended to be used as a pull-through fitting during wire installation, oversized or elongated conduit bodies shall be used. Oversized or elongated conduit bodies shall not be required if the conduit body is intended to be used as a pull-out point during wire installation.

C. Conduit Nipples and Unions

1. Conduits with running threads shall not be used in place of 3-piece couplings (unions) or close nipples. After installation of a conduit fitting of any kind, there shall be no more than ¼ inch of exposed threads visible. Factory fabricated all-thread nipples may be used between adjacent enclosures, however, the same restriction applies regarding the length of exposed threads that are visible.

D. Conduit Expansion and Deflection Fittings

1. Conduit expansion fittings shall be installed where required by the MEC and where indicated on the Drawings. Expansion fittings shall also be installed for exposed straight metallic conduit runs of more than 75 feet, in both indoor and outdoor locations. Expansion fittings for runs of non-metallic conduit shall be installed in accordance with the MEC.

2. Conduit deflection fittings shall be installed where required by the MEC and where conduits are installed (exposed and concealed) across structural expansion joints.

3. Unless otherwise specified herein, conduit expansion and deflection fittings shall be installed in accordance with the Installation Guidelines published within NEMA FB 2.40.

E. Conduit Termination Fittings

1. Where conduits terminate at enclosures with a NEMA 4, 4X, or 3R rating and the enclosure does not have integral conduit hubs, an appropriately sized watertight conduit hub shall be installed to maintain the integrity of the enclosure. The use of locknuts with integral gasket in lieu of watertight conduit hubs is not acceptable.

2. Where conduits terminate at enclosures that do not require conduit hubs, a two-locknut system shall be used to secure the conduit to the enclosure. One locknut shall be installed on the outside of the enclosure, and the other inside, drawn tight against the enclosure wall. The locknut on the interior of the enclosure shall be the type with integral bonding lug, or a conduit bonding bushing may be used in place of the interior locknut.

3. Conduits shall not be installed such that conduit fittings penetrate the top of any enclosure located outdoors, except in cases where specifically required by the serving electric utility. Conduits which serve outdoor equipment or an enclosure from above shall instead be routed into the side of the enclosure at the bottom. The conduit termination fitting shall be provided with a conduit drain to divert moisture from the raceway away from the enclosure.

3.05 MISCELLANEOUS

A. Conduit Periphery Sealing

1. All conduit penetrations through exterior walls shall be sealed around the periphery using the appropriate products specified in Part 2 herein to prevent air and/or water entry into the structure.

2. All conduit penetrations through interior walls and floors shall be sealed through the use of with conduit sleeves and caulk as specified in Part 2 herein. Alternatively, mortar may be used to seal around the conduit periphery.

3. Conduit penetrations through fire-rated walls as floors shall be made with the appropriate fire rated penetration product.

B. Conduit Interior Sealing

1. All conduits (including spares) entering a structure below grade shall be sealed on the interior of the conduit against water ingress. Sealing shall be at an accessible location in the conduit system located within the building structure and shall be via one of the methods specified in Part 2 herein. If conduit sealing cannot be achieved at an accessible location within the building structure, sealing shall be placed in the conduits in the nearest manhole or handhole outside the structure.

2. Conduit interior sealing shall not be installed until conductors inside are tested and test results are deemed acceptable by the Engineer. Conduit interior sealing shall be installed prior to energization of the conductors inside.

3.06 CONDUIT IDENTIFICATION

A. Exposed conduits shall be identified at the source, load, and all intermediate components of the raceway system. Examples of intermediate components include but are not limited to junction boxes, pull boxes, and disconnect switches. Identification shall be by means of an adhesive label with the following requirements:

1. Labels shall consist of an orange background with black text. Text for the label shall be the conduit number as indicated in the conduit and wire schedules.

2. In addition, at the source end of the conduit, a second line of text shall be included to indicate the load equipment name. This second line shall consist of the word “TO:” and the text in the ‘TO’ column of the conduit and wire schedule (e.g. TO: Pump No. 1). At the load end of the conduit, a second line of text shall be included to indicate the source equipment name. This second line shall consist of the word “FROM:” and the text in the ‘FROM’ column of the conduit and wire schedule (e.g. FROM: MCC-XXX). This requirement applies only to the source and load ends of the conduit, and not anywhere in between.

3. For conduits trade sizes 3/4 inch through 1-1/2 inch, the text shall be a minimum 18-point font. For conduits trade size 2 inch and larger, the text shall be a minimum 24-point font.

4. Label height shall be 3/4 inch minimum, and length shall be as required to fit required text. The label shall be installed such that the text is parallel with the axis of the conduit. The label shall be oriented such that the text can be read without the use of any special tools or removal of equipment.

5. Labels shall be installed after each conduit is installed and, if applicable, after painting. Labels shall be printed in the field via the use of a portable label printing system using thermal transfer technology. Handwritten labels are not acceptable.

6. Labels shall be made of permanent vinyl with adhesive backing. Labels made of any other material are not acceptable.

B. Conduits that are not exposed but installed beneath free standing equipment enclosures shall be identified by means of a plastic tag with the following requirements:

1. The tag shall be made of white Tyvek material, and have an orange label with black text, as described above, adhered to it. Text for the label shall be the conduit number as indicated in the conduit and wire schedules.

2. The tag shall be affixed to the conduit by means of a nylon cable tie. The tag shall be of suitable dimensions to achieve a minimum text size of 18 points.

C. Conduits for lighting and receptacle circuits shall not require identification.

D. Any problems or conflicts with meeting the requirements above shall immediately be brought to the attention of the Engineer for a decision.

3.07 TESTING

A. All tests shall be performed in accordance with the requirements of the General Conditions and Division 01. The following tests are required:

1. All conduit installed below grade or concrete encased shall be tested to ensure continuity and the absence of obstructions by pulling through each conduit a swab followed by a mandrel 85% of the conduit inside diameter. After testing, all conduits shall be capped after installation of a suitable pulling rope.

3.08 TRAINING OF INSTALLATION PERSONNEL

A. All **ELECTRICAL SUBCONTRACTOR** personnel that install PVC coated RGS conduit shall be trained by the PVC coated RGS conduit manufacturer. Training shall include proper conduit system assembly techniques, use of tools appropriate for coated conduit systems, and field bending/cutting/threading of coated conduit. Training shall have been completed within the past 24 months prior to the Notice to Proceed on this Contract to be considered valid. **ELECTRICAL SUBCONTRACTOR** personnel not trained within this timeframe shall not be allowed to install coated conduit or shall be trained/re-trained as required prior to commencement of conduit installation.

END OF SECTION

ATTACHMENT X – 26 05 36 CABLE TRAYS FOR ELETRICAL SYSTEMS

ACT0DIVISION 26

ELECTRICAL

(FILED SUB BID REQUIRED)

SECTION 26 05 36
CABLE TRAYS FOR ELECTRICAL SYSTEMS[1]

PART 1 – GENERAL

1.01 FILED SUB-BID REQUIREMENTS

A. This Section is part of the filed sub-bid for Division 26 – Electrical. See Section 26 05 00.

1.02 THE REQUIREMENT

A. Under this Section, the **ELECTRICAL SUBCONTRACTOR** shall furnish and install all cable tray systems as specified herein and as indicated on the Drawings.

B. The Drawings indicate the general location of the trays; however, the **ELECTRICAL SUBCONTRACTOR** shall install these trays in such a manner to avoid all interferences.

C. The cable tray systems shall be manufactured and installed in accordance with the following:

1. Massachusetts Electrical Code (MEC), Article 392 – Cable Trays

2. National Electrical Manufacturers Association (NEMA) Standard VE-1 – Metallic Cable Tray Systems

3. National Electrical Manufacturers Association (NEMA) Standard VE-2 – Cable Tray Installation Guidelines

D. The cable tray systems shall be listed and labeled by U.L. as suitable for the purpose.

E. Reference Section 26 05 00 – Basic Electrical Requirements.

1.03 SUBMITTALS

A. In accordance with the procedures and requirements set forth in Section 01 33 00 – Submittal Procedures, the **ELECTRICAL SUBCONTRACTOR** shall obtain from the equipment manufacturer and submit shop drawings. Each submittal shall be identified by the applicable Specification Section.

---

1 Addendum No.5

1.04 SHOP DRAWINGS

A. Each submittal shall be complete in all respects, incorporating all information and data listed herein and all additional information required for evaluation of the proposed equipment's compliance with the Contract Documents.

B. Partial, incomplete, or illegible submittals will be returned to the **ELECTRICAL SUBCONTRACTOR** without review for resubmittal.

C. Shop drawings shall include but not be limited to:

1. Equipment specifications and product data sheets for trays, fittings, supports, and other components identifying all materials used and methods of fabrication.

2. Layout drawings showing plan and isometric views of each tray system. Drawings shall indicate tray dimensions, support points, and other pertinent layout information.

3. Manufacturer's instructions indicating application conditions and limitations of use stipulated by the specified testing agency. Include instructions for storage, handling, protection, examination, preparation, and installation of the tray systems.

4. Manufacturer's warranty statement.

1.05 SYSTEM DESCRIPTION

A. Cable tray systems shall include straight trays, fittings, covers, splices, barrier strips, and related accessory and support items.

1. Power and control circuit cable tray systems shall be for support of AC power and control circuit cable.

2. Instrumentation cable tray systems shall be for support of DC control, alarm, instrumentation circuits, fiber optics, and communications cable.

B. Performance requirements for power and control circuit tray systems shall be as follows:

1. Concentrated load supporting capacity shall be a minimum of 200 pound concentrated load applied to the middle 6 inches without permanent deformation.

2. Uniform load supporting capacity shall be 50 pounds per linear foot when supported at minimum 20 feet on center with a safety factor of 1.5.

C. Performance requirements for instrumentation trays shall be as follows:

1. Concentrated load supporting capacity shall be a minimum of 200 pound concentrated load applied to the middle 6 inches without permanent deformation.

081115

2. Uniform loading capacity shall be a minimum 100 pounds per linear foot when supports span 20 feet on center with a safety factor of 1.5.

PART 2 – PRODUCTS

2.01 MANUFACTURERS

A. The material covered by this Specification is intended to be standard material of proven performance as manufactured by reputable manufacturers whose products have been in satisfactory use in similar service for not less than 5 years. Material shall be fabricated, constructed and installed in accordance with the best practices of the trade, and shall operate satisfactorily when installed as specified herein and shown on the Drawings.

B. Metallic cable tray systems shall be as manufactured by Eaton's B-Line, Square D Company, Atkore or Engineer approved equal.

2.02 MATERIALS

A. The metallic cable tray systems shall be aluminum, alloy 6063-T6 with natural finish.

2.03 COMPONENTS

A. Barrier strips shall be full depth capable of separating cables in tray as required by MEC.

B. Fittings shall be horizontal and vertical elbows, tees, and cross fittings with minimum radii equal to cable bending radii as recommended by cable manufacturer. Molded fittings shall be formed with a minimum 3" tangent portion following the radius.

C. Furnish and install accessories such as dropouts, end plates, splice plates and mounting supports, clamps and other devices required for a complete installation.

D. Tray bolts, nuts, washers, and fasteners shall be Type 304 or 316 stainless steel.

E. Grounding conductor, to be furnished and installed to the outside tray bottom flange, shall be No. 2/0 bare copper.

F. Lashing ties shall be provided to hold cables in place under maximum fault current conditions. Lashing ties shall be provided by the cable tray manufacturer. The use of plastic "zip ties" or any other method of holding cables in place is not acceptable.

G. Covers shall be solid, flanged, aluminum with ½" spacers for ventilation.

2.04 TRAY TYPES

A. Power and control circuit cable trays shall be NEMA Class 20A, ladder type with:

1. Double or box type rungs, free of sharp edges and corners, at minimum 9 inches on center as required to provide adequate cable bearing surface.

2. Sides of minimum 5-3/8 inch interior cable loading depth for metallic trays. "Z" shaped sides of minimum 4 inch interior cable loading depth for fiberglass tray.

3. Widths as indicated on the Drawings.

B. Instrumentation circuit cable trays shall be NEMA Class 20A, corrugated solid bottom type with:

1. Sides of minimum 4 inch interior cable loading depth.

2. Widths as indicated on the Drawings.

3. Drainage holes one quarter (1/4) inch diameter spaced at 5 foot on center, ground smooth and completed prior to cable installation.

PART 3 – EXECUTION

3.01 INSTALLATION

A. Install the cable tray systems in accordance with NEMA Standards VE-2, the Massachusetts Electrical Code (MEC), NFPA 70B, and the manufacturer's instructions.

B. Support the tray systems as required by NEMA VE-2. Cantilever tray systems from walls or, when conditions dictate, suspend trays from ceilings. Space support brackets at least once per straight section. Provide tray supports with channels under entire width of tray. Cable tray fitting supports shall be located such that they meet the strength requirements of straight sections. Install fitting supports per NEMA VE-2 guidelines, or in accordance with manufacturer's instructions. Submit proposed support system to Engineer for review.

C. Install trays 2 inches from wall surfaces, and with a minimum of 18 inches between tray bottoms vertically.

D. Secure tray to supports with fittings approved for the purpose in accordance with tray manufacturer. Do not weld trays to supports. Where aluminum trays are supported on steel supports, separate and isolate aluminum and steel in accordance with Section 26 05 29 – Hangers and Supports for Electrical Systems.

E. Install expansion joints at a minimum of every 50 on straight runs and as recommended by tray manufacturer.

F. Securely bond a grounding conductor with lugs to the outside of tray bottom flange for metallic trays, and clamp to a non-metallic tray. Run grounding conductor continuously for the full length of tray system. Attach grounding conductor to the facility grounding system. Verify continuity of the bond by a resistance test.

G. Group cables in trays by circuit type. Lash grouped cables with lashing ties at approximately 36 inches on center for vertical runs and at approximately 10 feet on

center for horizontal runs. Put sharp ends of lashing ties under cable tray runs or where ties will not damage the cable jacket or insulation. Label the cable groups to identify the circuit or cable group by plan designation.

H. Install tray covers in exterior locations, under stairs and gratings, and where indicated on the Drawings.

3.02 PROTECTION

A. Protect the tray systems until accepted by Owner.

3.03 WARNING LABELS

A. Furnish and install warning labels with black letters on a yellow background which reads as follows:

WARNING! DO NOT USE CABLE TRAY AS A WALKWAY, LADDER, OR SUPPORT. USE ONLY AS A MECHANICAL SUPPORT FOR CABLES!

B. Install warning labels at 10 feet intervals along the length of the tray system, located to be visible.

END OF SECTION

NO TEXT ON THIS PAGE

ATTACHMENT Y – 26 05 60 LOW-VOLTAGE ELECTRIC MOTORS

DIVISION 26

ELECTRICAL

(FILED SUB BID REQUIRED)

SECTION 26 05 60
LOW-VOLTAGE ELECTRIC MOTORS[1]

PART 1 – GENERAL

1.01 FILED SUB-BID REQUIREMENTS

A. This Section is part of the filed sub-bid for Division 26 – Electrical. See Section 26 05 00.

1.02 THE REQUIREMENT

A. The **ELECTRICAL SUBCONTRACTOR** shall furnish all labor, materials, tools and equipment necessary for furnishing, installing, connecting, testing and placing into satisfactory operation all low voltage electric motors as shown on the Drawings and specified herein. All motors required for this Contract shall comply with this Section unless otherwise noted.

1.03 CODES AND STANDARDS

A. Motors and related accessories shall be designed, manufactured, and/or listed to the following standards as applicable:

1. Institute of Electrical and Electronics Engineers (IEEE)

    a. IEEE 112 – Standard Test Procedure for Polyphase Induction Motors and Generators

2. National Electrical Manufacturer's Association (NEMA)

    a. NEMA MG 1 – Motors and Generators

3. Underwriters Laboratories (UL)

    a. UL 547 – Standard for Safety Thermal Protectors for Motors

    b. UL 674 – Electric Motors and Generators for Use in Hazardous (Classified) Locations

---

1 Addendum No. 5

c. UL 1004-1 – Standard for Rotating Electrical Machines

d. UL 1004-3 – Standard for Thermally Protected Motors

e. UL 1004-8 – Standard for Inverter Duty Motors

1.04 SUBMITTALS

A. In accordance with the procedures and requirements set forth in the General Conditions and Section 01 33 00 – Submittal Procedures, the **ELECTRICAL SUBCONTRACTOR** shall obtain from the equipment manufacturer and submit the following:

1. Shop Drawings.

2. Spare Parts List.

B. Each submittal shall be identified by the applicable Specification Section.

1.05 SHOP DRAWINGS

A. Each submittal shall be complete in all respects, incorporating all information and data listed herein and all additional information required for evaluation of the proposed equipment's compliance with the Contract Documents.

B. Partial, incomplete or illegible submittals will be returned to the **ELECTRICAL SUBCONTRACTOR** without review for resubmittal.

C. Individual shop drawings for electric motors shall be submitted in accordance with the procedures and requirements set forth in the General Conditions and Section 01 33 00 – Submittal Procedures, unless submitted as a part of the shop drawings for the driven equipment.

D. Shop drawings for electric motors shall include motor data sheets, dimensioned drawings, wiring diagrams for devices such as space heaters, temperature devices, and shaft grounding rings. Shop drawings shall identify electric characteristics and design, mechanical construction, manufacturer's name, type and pertinent specifications for the use intended, along with the name of the equipment to be driven. For motors rated 50 horsepower or greater, submittal of motor data for acceptance shall include, as a minimum, the following:

1. Manufacturer's type and frame designation

2. Horsepower rating

3. Time rating (per NEMA Standards)

4. Ambient temperature rating

061417

5. Motor winding insulation system designation

6. RPM at rated load

7. Frequency

8. Number of phases

9. Rated-load amperes

10. Voltage

11. Code letter (starting KVA per horsepower)

12. Design letter for integral horsepower induction motors (per NEMA Standards)

13. Service factor

14. Temperature rise at full load and at service factor load

15. Efficiency at 1/4, 1/2, 3/4 and full load

16. Power factor at 1/4, 1/2, 3/4 and full load

17. Motor outline, dimensions and weight

18. Motor winding insulation system description

19. Horsepower required by connected machine at specified conditions (load curves) shall be supplied for all compressors, propeller and positive displacement pumps.

20. The foregoing data shall also be verified after manufacture and shall be included with the information to be furnished in the operation and maintenance manuals specified.

E. The shop drawing information shall be complete and organized in such a way that the Engineer can determine if the requirements of these Specifications are being met. Copies of technical bulletins, technical data sheets from "soft-cover" catalogs, and similar information which is "highlighted" or somehow identifies the specific equipment items the **ELECTRICAL SUBCONTRACTOR** intends to provide are acceptable and shall be submitted.

1.06 SPARE PARTS

A. All spare parts as recommended by the equipment manufacturer shall be furnished to the Owner by the **ELECTRICAL SUBCONTRACTOR**.

PART 2 – PRODUCTS

2.01 MANUFACTURERS

A. The equipment covered by this Specification is intended to be standard equipment of proven performance as manufactured by reputable concerns. Equipment shall be designed, constructed and installed in accordance with the best practices of the trade, and shall operate satisfactorily when installed as shown on the Drawings.

B. Electric motors shall be manufactured by Baldor/Reliance Electric Company; Nidec Motors; Toshiba Industrial and Power Systems, Inc.; Siemens Energy & Automation, Inc.; General Electric Company; or equal.

2.02 MATERIALS AND CONSTRUCTION

A. Motors shall be built in accordance with the latest standards of NEMA, including, but not limited to MG-1 and MG-2, IEEE, ANSI and to the requirements specified herein.

B. Type

1. Unless otherwise noted, motors specified herein shall be polyphase squirrel cage, NEMA Design B, or single phase capacitor or repulsion start induction motors. Special equipment requiring a motor drive with unusual characteristics shall be equipped with a definite purpose motor to meet the necessary requirements.

2. Unless otherwise shown or specified, all motors 1/2 horsepower or larger shall be three- phase, 60 Hertz, NEMA Design B, squirrel cage induction motors designed for operation at 480 volts or greater as specified herein or shown on the Drawings.

3. Unless otherwise specified in the individual equipment specification for the driven equipment, or as required by the dynamic characteristics of the load as determined by the manufacturer of the machine to be driven, all polyphase squirrel cage motors shall be designed to withstand the starting voltage shown on the Drawings and shall have torque and locked rotor current characteristics as specified for NEMA Design B motors.

4. All motors 2 horsepower and smaller shall have windings encapsulated with a flexible epoxy compound, or insulated with a flexible epoxy compound, or insulated with the manufacturer's premium quality system which shall be subject to acceptance by the Engineer.

5. All motors above 250 horsepower shall have stator windings vacuum impregnated with a polyester insulation compound.

6. Unless otherwise noted, all motors smaller than 1/2 horsepower shall be standard single-phase capacitor start or repulsion start induction type designed for operation on 120 volts or 208 volts, 60 Hz alternating current. The motor shall deliver rated

load without exceeding a 80 degrees C temperature rise while operating in a 40 degrees C ambient temperature. Small fan motors less than 1/4 HP may be split-phase or shaded pole type. Shaded pole motors rated more than 1/4 horsepower are not acceptable. Fractional horsepower motors shall be completely equipped with all necessary auxiliary components for starting and labeled as "Thermally Protected". Insulation shall be Class B, except that submersible motors shall have epoxy encapsulation. Unless otherwise noted, the motors shall be totally enclosed. Small fan motors may be of the open type where they are suitably protected from moisture dripping and lint accumulation. Motors shall be provided with sealed ball bearings lubricated for 10 years of normal use.

7. Where specified, vertical hollowshaft motors shall be designed to carry the motors', pumps', and associated equipment's full thrust. The motors shall be equipped with grease lubricated spherical roller thrust bearings and lower radial guide bearings. Vertical hollowshaft motors shall be fitted with nonreversing ratchet assemblies where required by equipment specifications. Vertical adjustment shall be provided by means of a lockable nut at the top of the shaft.

8. Vertical hollowshaft motors shall have adequate thrust bearings to carry all motor loads and any other operating equipment loads. Horizontal motors shall not be installed where subjected to external thrust loads.

C. Rating

1. Each motor shall develop ample torque for its required service through its acceleration range and throughout its rated load range. The rating of the motors offered shall in no case be less than the horsepower shown on the Drawings or elsewhere specified. It should be noted that the motor sizes indicated on the Drawings or as otherwise specified herein, are motor sizes required to operate the specific equipment which is specified. Higher rated motor sizes may be determined from the actual equipment submitted, approved, purchased, and installed. Protective devices, motor starters, disconnect switches, and other necessary equipment shall be furnished and installed for the actual motor sizes required at no additional cost.

2. Motor ratings shall be based on continuous operation. The maximum temperature rise for open and drip proof type motors shall not exceed 90 degrees C, and for totally enclosed type motors shall not exceed 80 degrees C.

D. Motor Winding Insulation

1. Insulation shall be as specified for each particular type or class of motor. The insulation system shall provide a high dielectric strength, long life covering for the windings which may be required to operate in a continually damp, corrosive, and/or chemically contaminated environment. The insulation shall be resistant to

attack by moisture, acids, alkalies, abrasives, and mechanical and thermal shock. Leads shall be sealed with a non-wicking, non-hydroscopic insulation material.

2. Motor insulation resistance may be checked at any time after delivery to the job site or during the warranty period. Encapsulated motor stators may be subjected to insulation testing while completely submerged in water. Any motor not meeting the requirements specified herein will be rejected and shall be promptly replaced at no cost to the Owner.

3. Torque and locked rotor current characteristics for three phase motors shall be NEMA Design B. The locked rotor KVA/HP input at full voltage for 10 horsepower. motors and larger shall not exceed that permitted for Code Letter "J", except for specialized equipment requiring a motor drive with special definite characteristics.

4. Unless otherwise specified, non-inverter duty motors shall be furnished with a Class F insulation system. Unless otherwise specified, inverter duty motors shall be furnished with a Class H insulation system. In either case, temperature rise shall be limited to that for Class B insulation. Output torque and speed characteristics of each motor shall be suitable to operate the driven equipment through the full range of acceleration and operating load conditions without exceeding the nameplate current rating, and/or temperature rise.

E. Nameplates

1. The motor manufacturer's nameplate shall be engraved, embossed, or stamped on a stainless steel sheet and fastened to the motor frame with No. 4 or larger oval head stainless steel screws or drive pins. Printed or laser-etched nameplates are not acceptable.

2. Nameplates shall include as a minimum, Items 1 through 14 as listed in Article 1.04 D in addition to that required by NEMA standards. The nameplate shall be positioned so as to be readily visible for inspection as installed in the facility.

F. Design

1. Motors shall be designed to accelerate and drive the connected equipment under all normal operating conditions without exceeding nameplate ratings.

2. Motors specified for operation with variable frequency drives shall be inverter duty rated. Motors shall be considered inverter duty rated only if they meet all of the requirements for NEMA MG-1 Part 31.

3. Motors shall be designed to output 100 percent of nameplate horsepower under continuous duty service without exceeding the temperature rise specified herein when controlled by the actual drives furnished. Inverter duty motors shall be designed to operate down to 10% of full load speed without the need for a line powered cooling fan.

4. Unless otherwise specified, electric motors shall be furnished with service factors in accordance with NEMA MG-1 as follows:

Type of Motor	Service Factor
Non-inverter Duty	1.15
Inverter Duty	1.0

5. Design selection with respect to the driven machine shall be such that the requirements do not exceed 85 percent of the motors' maximum rating modified by service factor, ambient temperature, enclosure, altitude and electrical service. The electrical service conditions shall be assumed to be 10 percent undervoltage, 5 percent underfrequency, and 3 percent voltage unbalance. Altitude shall be assumed to be the project site elevation plus 10 percent. Ambient temperature shall be assumed to be 95 degrees F in exterior locations, 104 degrees F (40 degrees C) in interior locations, and 122 degrees F (50 degrees C) within housings or enclosures; except where higher temperatures may be encountered within or on individual items of equipment. The applicable paragraphs of NEMA MG-1 shall be used in making the design selection.

6. Motors used with belt drives shall have sliding bases to provide for belt take up.

7. Terminal boxes shall be of sufficient size to accommodate the required quantity and size of conduits. Gasketed terminal boxes shall be furnished with all splash-proof and totally enclosed motors. NEMA ratings of the terminal boxes shall be suited for the application. Motors located in hazardous locations shall be furnished with terminal boxes suitable for the specific Class, Division, and Group suitable for the application. Terminal boxes shall be sized to accommodate accessory equipment such as motor differential current transformers, where required.

8. Terminal boxes for horizontal motors shall be located on the left-hand side when viewing the motor from the drive shaft end and shall be so designed that conduit entrance can be made from above, below, or either side of the terminal box.

9. Motors larger than 250hp shall be manufactured with the six stator coil leads wired to a suitably sized motor junction box for application in a differential relay scheme. Current transformers shall be provided by the motor manufacturer and installed in the factory. All ground connections and current transformer connections shall be made in the factory.

G. Construction

1. Frames, mounting means, and shafts shall meet NEMA Standards for the horsepower, RPM, and enclosure selected. Enclosures shall be selected according to the degree of mechanical protection required and shall not be of

aluminum construction. All motors shall have a manufacturer's standard shop machinery finish, consisting of a rust-resisting priming coat of zinc chromate and a finish coat of alkyd machinery enamel. Reference Section 09 90 00 – Painting.

2. Motors shall have cast iron frames and a heavy gauge steel terminal box, with neoprene gaskets between the frame and the box and between the box and its cover. A grounding lug(s) shall be provided inside the terminal box.

3. Motors weighing more than 50 pounds shall be equipped with at least one lifting eye. All lifting hardware shall be corrosion resistant.

4. Motors located in hazardous locations shall be totally enclosed and suitable for the specific Class, Division, and Group suitable for the application.

5. Motors located in Class I or II, Division 1 hazardous locations shall bear a U.L.-674 label and shall be provided with a breather/drain approved for the hazardous location. The U.L. listed breather/drain shall prevent the entrance of contaminants while allowing moisture to drain out of the motor.

6. When located outdoors, or elsewhere if specified, motors shall be totally enclosed, non-ventilated (TENV) or totally enclosed, fan-cooled (TEFC) machines, unless otherwise noted. Totally enclosed motors shall be provided with two (2) 1/4 inch drain holes drilled through the bottom of the frame, which allows complete drainage of the frame. Where specified, TEFC motors controlled by a variable frequency drive shall be provided with a separately powered cooling fan motor that runs at 60HZ to ensure proper cooling of the motor at low speeds. Cooling fan motor shall be suitable for 120VAC, single phase operation. Vertically oriented motors located outdoors shall be provided with a drip cover over the fan end to prevent accumulation of precipitation.

7. Unless otherwise specified, motors rated 100 horsepower or greater located outdoors, in unheated structures, in below grade areas, or as otherwise indicated, shall be furnished with space heaters and embedded motor winding high temperature switches with leads brought out of the motor terminal box. Space heaters shall be suitable for 120VAC operation and for a maximum surface temperature of less than 200 degrees C. Space heaters shall be of sufficient wattage to maintain the internal temperature of the motor at approximately 10 degrees C above the ambient temperature when the motor is not running.

    a. Embedded motor winding temperature switches shall operate at temperatures well below the temperature rating of the motor winding insulation system. Motor winding temperature switches are not required where other temperature monitoring devices (e.g. RTD's) are required.

8. Unless otherwise specified in the equipment specifications, motors rated 200HP or greater that are controlled by a VFD shall be furnished with resistance thermal

detectors (RTD's) embedded in the stator windings, two per phase. RTD's shall be pre-wired to terminal blocks located in a separate terminal box as specified herein.

9. Unless otherwise specified in the equipment specifications, motors rated less than 200HP that are controlled by a VFD shall be furnished with motor winding high temperature switches embedded in the stator windings with the leads brought out to the motor terminal box.

10. If so specified and when located in indoor areas which are heated and weatherproof, motors shall be open drip-proof machines. Ventilation openings shall be arranged to prevent the entrance of drops of liquid or solid particles at any angle from zero to 15 degrees downward from vertical.

11. Unless otherwise specified, or required, motors rated less than 200 horsepower shall be furnished with bearings of the grease lubricated, antifriction ball type with conveniently located grease fittings and drain plugs. A means of preventing bearings from becoming over-greased shall be provided. Bearings shall have a minimum B-10 life of 20,000 hours.

12. Rotors shall be statically and dynamically balanced. Rotor windings shall be one-piece cast aluminum. Where applicable, rotors shall be constructed with integral fins.

13. Externally mounted motor shaft grounding rings shall be provided to protect motors against motor shaft and bearing currents. Grounding rings shall be provided for all motors controlled by VFDs, with the following exceptions:

    a. Motors located in hazardous areas

    b. Motors rated less than 1 horsepower

    c. Submersible motors

14. All motors shall be provided with factory-installed one-hole terminations (ring terminals) on the ends of all motor leads. Terminations shall be identified for use with cables that have stranding other than Class B and shall be the irreversible compression type.

H. Power Factor and Efficiency

1. All motors, including vertical hollowshaft motors, in the range of 1-500 horsepower, inclusive, shall be designed specifically for energy efficiency and high power factor. The motor efficiency and power factor shall meet or exceed the values listed in the table below when the motors are tested in accordance with the NEMA preferred test method IEEE 112A, Method B, Dynamometer. Each motor shall meet the minimum guaranteed efficiency value indicated in the table below. All tests shall be performed in accordance with the procedures contained in NEMA

Standard MG1-12.58.

Table 12-11
FULL-LOAD EFFICIENCIES OF ENERGY EFFICIENT MOTORS
ENCLOSED MOTORS

HP	2 POLE		4 POLE		6 POLE		8 POLE	
	Nominal Efficiency	Minimum Efficiency	Nominal Efficiency	Minimum Efficiency	Nominal Efficiency	Minimum Efficiency	Nominal Efficiency	Minimum Efficiency
1	75.5	72	82.5	80	80	77	74	70
1.5	82.5	80	84	81.5	85.5	82.5	77	74
2	84	81.5	84	81.5	86.5	84	82.5	80
3	85.5	82.5	87.5	85.5	87.5	85.5	84	81.5
5	87.5	85.5	87.5	85.5	87.5	85.5	85.5	82.5
7.5	88.5	86.5	89.5	87.5	89.5	87.5	85.5	82.5
10	89.5	87.5	89.5	87.5	89.5	87.5	88.5	86.5
15	90.2	88.5	91	89.5	90.2	88.5	88.5	86.5
20	90.2	88.5	91	89.5	90.2	88.5	89.5	87.5
25	91	89.5	92.4	91	91.7	90.2	89.5	87.5
30	91	89.5	92.4	91	91.7	90.2	91	89.5
40	91.7	90.2	93	91.7	93	91.7	91	89.5
50	92.4	91	93	91.7	93	91.7	91.7	90.2
60	93	91.7	93.6	92.4	93.6	92.4	91.7	90.2
75	93	91.7	94.1	93	93.6	92.4	93	91.7
100	93.6	92.4	94.5	93.6	94.1	93	93	91.7
125	94.5	93.6	94.5	93.6	94.1	93	93.6	92.4
150	94.5	93.6	95	94.1	95	94.1	93.6	92.4
200	95	94.1	95	94.1	95	94.1	94.1	93
250	95.4	94.5	95	94.1	95	94.1	94.5	93.6
300	95.4	94.5	95.4	94s.5	95	94.1		
350	95.4	94.5	95.4	94.5	95	94.1		
400	95.4	94.5	95.4	94.5				
450	95.4	94.5	95.4	94.5				
500	95.4	94.5	95.8	95				

Table 12-12
FULL-LOAD EFFICIENCIES FOR NEMA PREMIUM™ EFFICIENCY ELECTRIC MOTORS
RATED 600 VOLTS OR LESS (RANDOM WOUND)
OPEN MOTORS

HP	2 POLE		4 POLE		6 POLE	
	Nominal Efficiency	Minimum Efficiency	Nominal Efficiency	Minimum Efficiency	Nominal Efficiency	Minimum Efficiency
1	77	74	85.5	82.5	82.5	80
1.5	84	81.5	86.5	84	86.5	81.5
2	85.5	82.5	86.5	84	87.5	81.5
3	85.5	82.5	89.5	84	88.5	86.5
5	86.5	84	89.5	84	89.5	87.5
7.5	88.5	86.5	91	89.5	90.2	88.5
10	89.5	87.5	91.7	90.2	91.7	90.2
15	90.2	88.5	93	91.7	91.7	90.2
20	91	89.5	93	91.7	92.4	91
25	91.7	90.2	93.6	92.4	93	91.7
30	91.7	90.2	94.1	93	93.6	92.4
40	92.4	91	94.1	93	94.1	93
50	93	91.7	94.5	93.6	94.1	93
60	93.6	92.4	95	94.1	94.5	93.6
75	93.6	92.4	95	94.1	94.5	93.6
100	93.6	92.4	95.4	94.5	95	94.1
125	94.1	93	95.4	94.5	95	94.1
150	94.1	93	95.8	95	95.4	94.5
200	95	94.1	95.8	95	95.4	94.5
250	95	94.1	95.8	95	95.4	94.5
300	95.4	94.5	95.8	95	95.4	94.5
350	95.4	94.5	95.8	95	95.4	94.5
400	95.8	95	95.8	95	95.8	95
450	95.8	95	96.2	95.4	96.2	95.4
500	95.8	95	96.2	95.4	96.2	95.4

NOTES:

(Motor data for continuous duty, NEMA Design B, 1.15 service factor, 40 degrees Celsius ambient, Class F insulation, 3 phase, 460 volt, at listed speed rating.

(TEFC efficiencies apply to both horizontal and vertical motors).

2. Motors rated 50 horsepower or greater shall be individually tested at the factory before shipment, with a copy of test results provided for the Engineer, to assure compliance with the efficiency and power factor specifications.

PART 3 – EXECUTION

3.01 INSTALLATION

A. Motors shall be installed as shown on the Drawings and in accordance with the manufacturer's installation instructions.

3.02 DELIVERY, STORAGE, AND HANDLING

A. Motors shall be properly protected from weather hazards. Motors shall not be allowed to be wrapped tightly in plastic while outdoors. Motors delivered to the site which will not be put in service for a time in excess of 30 calendar days, whether in storage or installed, shall have the shafts rotated a minimum of five (5) rotations every 30 days.

B. Motors provided with space heaters shall have temporary power applied to the heaters no later than 30 calendar days after delivery to the site until permanent power can be applied to the heaters.

C. Motors that, in the opinion of the Engineer, have not been properly protected shall be inspected by the manufacturer's representative. Any required electrical corrections for testing shall be made at the **ELECTRICAL SUBCONTRACTOR'S** expense prior to acceptance and/or use.

D. All motors shall operate without any undue noise or vibration and shall show no signs of phase unbalance.

3.03 TESTING

A. All tests shall be performed in accordance with the requirements of the General Conditions and Division 01. The following tests are required:

1. Witnessed Shop Tests

a. All motors shall be shop tested and inspected in accordance with the equipment manufacturer's standard procedures. Shop tests for motors 250 horsepower and larger may be witnessed by the Engineer. The manufacturer's testing and inspection procedures shall demonstrate that the equipment tested conforms to the requirements specified, all other applicable requirements, and shall be approved by the Engineer. At least 10 days' notice shall be given the Engineer prior to tests and inspection dates.

b. In addition to the efficiency and power factor testing specified herein, each motor shall be tested to determine compliance with the applicable requirements of the IEEE, ANSI and NEMA. Tests shall be as follows:

1) Motors less than 50 HP:

a) Each motor shall be subjected to a standard, short commercial test including the following:

i. Running current, no load

ii. Locked rotor current

iii. High potential

iv. Winding resistance

v. Bearing inspection

2) Motors between 50 and 100 HP

a) Each motor shall be subjected to the above tests and shall be furnished with certified test results.

3) Motors larger than 100 HP

a) Each motor shall be furnished with certified test results. Each motor shall be subjected to a complete test consisting of full load heat run, percent slip, running load current, locked rotor current, breakdown torque (calculated), starting torque, winding resistance, high potential, secondary current and voltage at collector rings (wound rotor), efficiencies at 100, 75 and 50 percent of full load, power factors at 100, 75 and 50 percent of full load and bearing inspection. Tests will be witnessed by the Engineer where specifically indicated.

4) Test Reports

a) All test results for motors over 100 horsepower shall be submitted to the Engineer for approval. Copies of witnessed test raw data shall be submitted to the Engineer immediately upon completion of such tests.

2. Field Tests

a. Field tests shall be performed in accordance with the requirements specified in the General Conditions, Division 01, and Section 26 05 00 – Basic Electrical Requirements.

b. All electric motors furnished for this project one (1) horsepower or larger shall have the information required in the following tabulation completed. See Exhibit "A" on following page.

c. All field testing shall be witnessed by the Engineer.

(EXHIBIT A)

MOTOR TEST RECORD					
Motor Identification Remarks	**Location**	**Specified Horsepower**	**Nameplate Horsepower**	**Nameplate Amperage (FLA)**	**Measured Amperage Under Normal Operating Conditions**

END OF SECTION

ATTACHMENT Z – 26 05 73 POWER SYSTEM STUDIES

DIVISION 26

ELECTRICAL

(FILED SUB BID REQUIRED)

SECTION 26 05 73

POWER SYSTEM STUDIES[1]

PART 1 – GENERAL

1.01 FILED SUB-BID REQUIREMENTS

1. This Section is part of the filed sub-bid for Division 26 – Electrical. See Section 26 05 00.

1.02 THE REQUIREMENT

1. Requirements for providing Power System Studies and field testing. The **ELECTRICAL SUBCONTRACTOR** shall provide Power System Studies and field testing in accordance with the requirements specified under this Section, the Specifications and the Contract Drawings.

2. The Power System Studies shall include a load flow study, a short circuit study, a protective device evaluation study and a protective device coordination study for a completely coordinated power distribution system. Power System studies shall include other studies as applicable including but not limited to motor starting and harmonic studies.

3. Power Systems Studies shall be completed by modelling the entire low-voltage and medium-voltage equipment of the Power System in the software detailed in this Section. The studies shall encompass existing systems and the proposed systems.

4. The model shall comprise all major nodes and major branches of the Power System.

5. The model shall also comprise dummy nodes and dummy branches to attain a level of connectivity similar to the Single Line Diagram representation of the Power System.

6. The model shall completely facilitate the examination of normal operations, and alternate operations of the Power System which could result in deviations from the normal operating values at major nodes and in major branches of the Power System.

1.03 REFERENCES

A. Definitions

---

1 Addendum No. 5

1. Power System as used in this Section shall mean all of the electrical distribution network from the Utility connection to all loads. This includes all on site generating sources, all branches and all nodes.

2. Low-Voltage as used in this Section and the Specifications shall mean all equipment, conductors, insulation systems and accessories intended for operation at less than 1000 volts and within the 600 V Class.

3. Medium-voltage as used in this Section and the Specifications shall mean all equipment, conductors, insulation systems and accessories intended for operation above 1000 volts and below 99000 volts.

4. Node as used in this Section shall mean any point in the Power System where two or more pieces of electrical equipment connect.

5. Branch as used in this Section shall mean any element of the Power System connecting any two nodes.

6. Major Node as used in this Section shall mean any node representing actual real world connection points of branches of the Power System such as busses in switchboards, MCCs or panelboards or the connection points of cables to load and equipment.

7. Dummy Node as used in this Section shall mean any fictitious node created within the modelling software to facilitate modelling of the Power System.

8. Major Branch as used in this Section shall mean any branch representing actual real world elements of the Power System such as feeders, breakers, transformers, and cables.

9. Dummy Branch as used in this Section shall mean any fictitious branches created within the modelling software to facilitate modelling of the Power System.

10. The Electric Utility is Westfield Gas & Electric.

11. Harmonic Sources as used in this Section shall mean:

    a. All equipment drawing non-linear currents and causing the voltage and currents at the node to which they are connected and other nodes to exhibit non-linear voltage and current characteristics. Equipment includes:

        1. Convertors in variable frequency drives and switch mode power supplies.

        2. Semiconductor switches modulating the voltage in soft starters, light dimmers and electronic ballast.

    b. Utility sources whose waveforms are distorted dues to non-linear loads at other consumers on the Utility network.

12. Point of Common Coupling (PCC) is the node where the Power System is connected to the Utility.

    a. Subordinate PCCs may be also defined at the nodes within the Power System where the equivalent network of the Utility and the Power System and specific harmonic sources are connected.

    b. PCCs are shown on the Contract Drawings.

1.04 CODES AND STANDARDS

Reference Standards. Power System Studies shall comply with and be performed in accordance with the latest applicable provisions and recommendations of the following:

1. IEEE C37.04 - IEEE Standard Rating Structure for AC High Voltage Circuits Rated on a Symmetrical Basis

2. IEEE C37.010 - IEEE Application Guide for AC High Voltage Circuit Breakers Rated on a Symmetrical Basis

3. IEEE C37.13 - IEEE Standard for Low-Voltage AC Power Circuit Breakers Used in Enclosures

4. IEEE 141 - IEEE Recommended Practice for Electric Power Distribution in Industrial Plants

5. IEEE 399 - IEEE Recommended Practice for Industrial and Commercial Power System Analysis

6. IEEE 519 - IEEE Recommended Practice and Requirements for Harmonic Control in Electric Power Systems

7. IEEE 1015 - IEEE Recommended Practice for Applying Low-Voltage Breakers Used in Industrial and Commercial Power Systems

8. IEEE 1584 - IEEE Guide for Performing Arc-Flash Hazard Calculations

9. NETA ATS - NETA Acceptance Testing Specification

1.05 SUBMITTALS

1. **ELECTRICAL SUBCONTRACTOR** shall submit Shop Drawings and material specifications for the approval of the Engineer. Submittals shall include, but not be limited to:

    a. Experience of the Licensed Engineer who will perform the Power Systems Studies

b. Version of the software to be used to conduct Power Systems Studies

c. Calculations and results of the Power System Studies shall be submitted. The submission of calculation and results shall consist of:

1. A report detailing all the findings, recommendations and settings arising from the studies. The report shall be stamped and signed by the Licensed Engineer.

2. The complete software files produced by the study software, and corresponding to the findings, recommendations and settings contained in the report. Two copies of the software files shall be submitted, one copy shall be write protected and the other shall not.

2. Each submittal shall be complete in all respects, incorporating all information and data listed herein and all additional information required for evaluation of the compliance with the Contract Documents.

3. Partial, incomplete or illegible submissions will be returned to the **ELECTRICAL SUBCONTRACTOR** without review for resubmittal.

4. The Power System Studies shall be submitted for approval prior to receiving the final approval of the Power System equipment and/or prior to the release of equipment drawings for manufacturing.

5. Power System Studies shall be submitted for approval prior to the Engineer giving approval for drawings to be submitted for review by the Utility.

6. In the event that formal completion of the Power System Studies may cause delay in the approval of equipment or Utility drawings then a preliminary submission of the Power System Studies shall be made. The Engineer will determine whether the preliminary submission is sufficient to allow approval of equipment and Utility drawings.

7. Work sequence for the field testing shall be submitted. The sequence shall indicate the schedule of work, time frame and downtime for the equipment. The work sequence shall be submitted at least 60 days in advance prior to conformation of field testing dates.

8. Qualifications of proposed testing firm to perform field testing shall be submitted. Submit firm experience records at least 60 days in advance to actual testing along with five recent references with phone numbers.

9. Field test report shall be submitted.

1.06 QUALITY ASSURANCE

1. Modelling:

1. The Power System studies shall be performed in accordance with the latest applicable provisions and recommendations of the Reference Standards in this Section.

2. The **ELECTRICAL SUBCONTRACTOR** shall retain the services of a Professional Engineer, licensed in the State of Massachusetts, to perform the Power System Studies.

3. The Licensed Engineer shall be from an independent consulting firm or the equipment manufacturer and shall have a minimum of 5 years of experience in performing Industrial Power System Studies.

4. It shall be the responsibility of the **ELECTRICAL SUBCONTRACTOR'S** Licensed Engineer:

   a. To evaluate all devices.

   b. Evaluate all equipment.

   c. Determine all performance indices at the PCC.

   d. Establish the settings of all protection functions.

   e. Establish the settings required to secure selective coordination among protective devices.

5. Power System Studies shall be completed using the software program listed in this Section.

6. The **ELECTRICAL SUBCONTRACTOR** shall coordinate with the Licensed Engineer performing the studies and assist the Engineer in the collection of all information necessary to complete the studies specified.

7. All test equipment and instrument calibration shall be in accordance with the latest edition of the accuracy standard of the NIST and NETA ATS.

2. Field Testing:

   1. The Power System shall be field tested. The field testing shall be performed in accordance with the requirements specified under this Section.

   2. The **ELECTRICAL SUBCONTRACTOR** shall retain the service of an independent testing firm who shall perform field testing of the Power System. The testing firm shall have experience in the inspection and testing of the system equipment and shall be a member company of NETA. Provide proof of membership, or demonstrate that the standards and experience required for membership are possessed, all to the satisfaction of the Engineer.

PART 2 – PRODUCTS

2.01 MANUFACTURERS

1. Software

    1. The only software program to conduct power system studies shall be:

        a. DesignBase 5.0 (by Power Analytics Corporation), ETAP (by Operation Technology, Inc.), EasyPower (by EasyPower LLC), and SKM Power Tools (by SKM Systems Analysis, Inc.).

2.02 POWER SYSTEM STUDIES

1. Load Flow Study:

    1. The load flow study shall be preliminary to all the other studies and for all proposed operating conditions of the Power System. The load flow study shall be used to

        a. Preset the study parameters as applicable for each of the studies listed under this Section.

        b. Confirm the layout and balance of the power flows across the major branches

        c. Establish the voltage profiles at all major nodes.

        d. Identify real and reactive power flows into nodes and across the branches of the Power System.

        e. Determine real and reactive power losses in the Power System.

        f. Identify proposed transformer tap settings.

        g. Problem areas or equipment capacity inadequacies shall be promptly brought to the Engineer's attention.

2. Short Circuit Study:

    1. Short-circuit momentary duties and interrupting duties shall be calculated on the basis of maximum available fault current at each major node and through major branches and other significant locations through the system.

    2. The short circuit tabulations shall include symmetrical fault currents, and X/R ratios.

3. For each fault location, the total duty on the major nodes, as well as the individual contribution from each connected branch, including motor back EMF current contributions shall be listed with its respective X/R ratio

3. Protective Device Evaluation Study:

    1. The protective device evaluation study shall be performed to determine the adequacy of circuit breakers, controllers, surge arresters, busways, switches, and fuses by tabulating and comparing the short-circuit ratings of these devices with the prospective fault currents.

    2. Appropriate multiplying factors based upon system X/R ratios and protective device rating standards shall be applied.

4. Protective Device Coordination Study:

    1. The protective device coordination study shall be performed to select or to check the selections of the power fuse ratings, protective relay characteristics and settings, ratios and characteristics of associated voltage and current transformers, and low-voltage breaker trip characteristics and setting.

    2. The device settings computed in the coordination study shall provide complete selectivity.

        a. The system shall be selectively coordinated such that only the device nearest a fault will operate to remove a faulted circuit.

        b. System selectively shall be based on both the magnitude and the duration of a fault current.

    3. The coordination study shall include all voltage classes of equipment starting at the utility's incoming feeder protective device down to and including each of the medium and low voltage load. The phase and ground overcurrent and ground fault protection shall be included, as well as settings for all other adjustable protective devices.

    4. The time-current characteristics of the installed protective devices shall be plotted on the appropriate log-log paper. Reasonable coordination intervals and separation of characteristic curves shall be maintained. The coordination plots for phase and ground protective devices shall be provided on a complete system basis. Sufficient curves shall be used to clearly indicate selective coordination achieved to the utility main breaker, power distribution feeder breakers, and the overcurrent devices at each major load center.

    5. There shall be a maximum of six protective devices per plot. Each plot shall be appropriately titled. Plots shall include the following information as required for the circuits shown:

a. Representative one-line diagram, legend and types of protective devices selected.

b. Utility's relays or fuse characteristics.

c. Significant motor starting characteristics.

d. Parameters of transformers, ANSI magnetizing inrush and withstand curves.

e. Operating bands of low voltage circuit breaker trip curves, and fuse curves.

f. Relay taps, time dial and instantaneous trip settings.

g. Cable damage curves.

h. Symmetrical and asymmetrical fault currents.

6. The selection and settings of the protective devices shall be provided separately in a tabulated form listing circuit identification, IEEE device number, current transformer ratios, manufacturer, type, range of adjustment, and recommended settings. A tabulation of the recommended power fuse selection shall be provided for all fuses in the system.

5. Harmonics Study:

1. Provide a harmonics study for the Power System including Utility and alternate sources.

2. The goal of the Harmonic Study shall be:

a. To identify and quantify all distortions in voltage and current waveforms in the Power System.

b. To identify and quantify all resonances in the Power System.

c. To evaluate the performance of the Power System at the PCC under all conditions of normal and alternate operations, ensuring compliance with the Recommended Harmonic Limits of IEEE 519.

d. To ensure that all remedial measures required to achieve the Recommended Harmonic Limits and mitigate resonances are incorporated into the Power System.

3. Capacitor-Inductor filter traps that require tuning to the power system are not acceptable.

4. The **ELECTRICAL SUBCONTRACTOR** along with manufacturer of harmonic sources shall provide for the design, furnishing and installation of the remedial

measures and appurtenances required to meet the requirements of the Harmonic Study.

5. The **ELECTRICAL SUBCONTRACTOR** along with the manufacturer of harmonic sources is responsible to provide an updated single line diagram with referenced data within the submittal for this study.

6. The report shall be provided for approval prior to or with the shop drawings of the harmonic sources. Submittals of harmonic sources prior to or without the study will be considered incomplete and not reviewed.

PART 3 – EXECUTION

3.01 POWER SYSTEM STUDIES

1. Study Report

    1. The results of the Power System Studies shall be summarized in a final typewritten report. The report shall include the following Sections:

        a. Description, purpose, basis, written scope, and a single-line diagram of the power distribution system which is included within the scope of the study.

        b. Tabulations of circuit breaker, fuses, and other equipment ratings versus calculated short-circuit duties, and commentary regarding same.

        c. Protective device time versus current coordination curves, tabulations of relay and circuit breaker trip settings, fuse selection, and commentary regarding same.

        d. Fault current tabulation including a definition of terms and a guide for interpretation.

        e. Tabulation of appropriate tap settings for relay seal-in units.

2. Load Flow

    1. Tabulations of load flow study results inclusive of normal, minimum and maximum branch loadings along with normal, minimum and maximum voltages at nodes.

    2. Tabulations of power losses for the Power System elements and the total power loss for the Power System.

3. Short Circuit

    Tabulations of short circuit study results including a definition of terms and guide for interpretation.

4. Protective Device Evaluation

    1. Tabulations of circuit breaker, fuses, and other equipment ratings versus calculated short-circuit duties, and commentary regarding same.

5. Protective Device Coordination

    1. Protective device time versus current coordination curves.

    2. Tabulations of relay and circuit breaker trip settings, fuse selection, and commentary regarding same.

    3. Tabulation of appropriate tap settings for relay seal-in units.

6. Harmonic Study

    1. Tabulation of Harmonic Sources including all VFDs operating simultaneously operating over their speed range under normal and alternate operations of the Power System.

    2. Branch and node voltage and current harmonic current as a percentage of the 60 Hz fundamental up to the fiftieth harmonic, inclusive of the simultaneous operation of harmonic sources to meet specific actual loadings of the Power System.

    3. All calculations used to arrive at the recommendations.

    4. Explanation of the methods used to perform the study.

    5. Explanation of study results with specific recommendations on filters and/or other measures that will be implemented to meet the specified limits or mitigate expected resonances.

7. Diagrams

    1. Single line diagram along with suitable and relevant back annotation shall be included for each alternative of the Power System studied.

    2. An impedance diagram along with suitable and relevant back annotation shall be included for each alternative of the Power System studied.

8. Software Model Files

    1. The **ELECTRICAL SUBCONTRACTOR** shall provide two copies of the software files used to provide the Power System Studies

        a. One copy of the software file shall be write protected and shall be capable of all its elements being viewed in the software program stated in this Section.

b. The second copy of the software file shall not be write protected and shall be capable of all its elements being modified by the software program stated in this Section.

3.02 FIELD TESTING

1. The **ELECTRICAL SUBCONTRACTOR** shall provide field testing of the Power System.

2. All field testing shall be performed by the testing firm, after the completion and approval of the Power System Studies.

3. The field testing shall be witnessed by the Engineer and certified by the **ELECTRICAL SUBCONTRACTOR**.

4. The testing firm shall adjust, set, calibrate and test all protective devices. All protective relays and meters in the medium and low voltage equipment shall be set, adjusted, calibrated and tested in accordance with the manufacturer's recommendations, the coordination study and best industry practice.

5. Proper operation of all equipment associated with the device under test and its compartment, shall be verified, as well as complete resistance, continuity and polarity tests of power, protective and metering circuits. Any minor adjustments, repairs and/or lubrication necessary to achieve proper operation shall be considered part of this Contract.

6. All solid state trip devices shall be checked and tested for setting and operation.

7. Circuit breakers and/or contactors associated with the trip devices shall be tested for trip and close function with their protective device.

8. Testing shall be performed at each major node to which harmonic sources are connected to determine if the predicted recommendations of the Harmonic Study have been achieved.

9. Test will measure and compare the harmonic levels with respect to those detailed in the Harmonic Study.

10. All harmonic levels of voltage and current which do not meet the recommendations of the Harmonic Study shall be corrected at the **ELECTRICAL SUBCONTRACTOR'S** expense.

11. All tests shall be in accordance with the manufacturer's recommendations and NETA, ATS.

12. The **ELECTRICAL SUBCONTRACTOR** shall provide a field testing report. The report shall be in accordance with NETA, ATS.

3.03 STARTUP/DEMONSTRATION

1. Maintenance of Operations

    1. Since the field testing work specified shall require that equipment be taken out of service, the **ELECTRICAL SUBCONTRACTOR** shall perform field testing with due regard to maintenance of operations and construction staging in accordance with this Section and the Specifications.

    2. All testing procedures and schedules must be scheduled in advance prior to any work beginning

END OF SECTION

NO TEXT ON THIS PAGE

ATTACHMENT AA – 26 06 11 Part 2 of Cable and Conduit Schedule

CABLE AND CONDUIT SCHEDULE - WEST PARISH WTF							
CONDUIT NO.	SIZE	CABLE & SIZE	CONDUIT TYPE	FROM	TO	PURPOSE	REMARKS
OUTDOOR C&C							
P-001	5"	3 - #1/0 AWG (23 KV) & 1 - #4/0 GND	PVC SCHEDULE 40	EXISTING UTILITY POLE	UTILITY METERING	23KV Power	
P-DB-1-SPARE-A	5"	SPARE	PVC SCHEDULE 40	EXISTING UTILITY POLE	UTILITY METERING	23KV Power	
P-002	5"	3 - #1/0 AWG (23 KV) & 1 - #4/0 GND	PVC SCHEDULE 40	UTILITY METERING	DSW-SVC-01	23KV Power	
P-DB-2-SPARE-A	5"	SPARE	PVC SCHEDULE 40	UTILITY METERING	DSW-SVC-01	23KV Power	
P-003	5"	3 - #1/0 AWG (23 KV) & 1 - #4/0 GND	PVC SCHEDULE 40	DSW-SVC-01	TX-SVC-01	23KV Power	
P-DB-3-SPARE-A	5"	SPARE	PVC SCHEDULE 40	DSW-SVC-01	TX-SVC-01	23KV Power	
P-004-A	5"	4 - #600 KCMIL W 1#500 GND	PVC SCHEDULE 40	TX-SVC-01	SWGR-01	480V Power	
P-004-B	5"	4 - #600 KCMIL W 1#500 GND	PVC SCHEDULE 40	TX-SVC-01	SWGR-01	480V Power	
P-004-C	5"	4 - #600 KCMIL W 1#500 GND	PVC SCHEDULE 40	TX-SVC-01	SWGR-01	480V Power	
P-004-D	5"	4 - #600 KCMIL W 1#500 GND	PVC SCHEDULE 40	TX-SVC-01	SWGR-01	480V Power	

CABLE AND CONDUIT SCHEDULE - WEST PARISH WTF							
CONDUIT NO.	SIZE	CABLE & SIZE	CONDUIT TYPE	FROM	TO	PURPOSE	REMARKS
P-004-E	5"	4 - #600 KCMIL W 1#500 GND	PVC SCHEDULE 40	TX-SVC-01	SWGR-01	480V Power	
P-004-F	5"	4 - #600 KCMIL W 1#500 GND	PVC SCHEDULE 40	TX-SVC-01	SWGR-01	480V Power	
P-004-G	5"	4 - #600 KCMIL W 1#500 GND	PVC SCHEDULE 40	TX-SVC-01	SWGR-01	480V Power	
P-004-H	5"	4 - #600 KCMIL W 1#500 GND	PVC SCHEDULE 40	TX-SVC-01	SWGR-01	480V Power	
P-004-I	5"	4 - #600 KCMIL W 1#500 GND	PVC SCHEDULE 40	TX-SVC-01	SWGR-01	480V Power	
P-004-J	5"	4 - #600 KCMIL W 1#500 GND	PVC SCHEDULE 40	TX-SVC-01	SWGR-01	480V Power	
P-DB-4-SPARE-A	5"	SPARE	PVC SCHEDULE 40	TX-SVC-01	SWGR-01	480V Power	
P-DB-4-SPARE-B	5"	SPARE	PVC SCHEDULE 40	TX-SVC-01	SWGR-01	480V Power	
P-005-A	5"	4 - #600 KCMIL W 1#500 GND	PVC SCHEDULE 40	2000 KW STANDBY GENERATOR	GENERATOR MANUAL TRANSFER SWITCH	480V Power	
P-005-B	5"	4 - #600 KCMIL W 1#500 GND	PVC SCHEDULE 40	2000 KW STANDBY GENERATOR	GENERATOR MANUAL TRANSFER SWITCH	480V Power	

CABLE AND CONDUIT SCHEDULE - WEST PARISH WTF							
CONDUIT NO.	SIZE	CABLE & SIZE	CONDUIT TYPE	FROM	TO	PURPOSE	REMARKS
P-005-C	5"	4 - #600 KCMIL W 1#500 GND	PVC SCHEDULE 40	2000 KW STANDBY GENERATOR	GENERATOR MANUAL TRANSFER SWITCH	480V Power	
P-005-D	5"	4 - #600 KCMIL W 1#500 GND	PVC SCHEDULE 40	2000 KW STANDBY GENERATOR	GENERATOR MANUAL TRANSFER SWITCH	480V Power	
P-005-E	5"	4 - #600 KCMIL W 1#500 GND	PVC SCHEDULE 40	2000 KW STANDBY GENERATOR	GENERATOR MANUAL TRANSFER SWITCH	480V Power	
P-005-F	5"	4 - #600 KCMIL W 1#500 GND	PVC SCHEDULE 40	2000 KW STANDBY GENERATOR	GENERATOR MANUAL TRANSFER SWITCH	480V Power	
P-005-G	5"	4 - #600 KCMIL W 1#500 GND	PVC SCHEDULE 40	2000 KW STANDBY GENERATOR	GENERATOR MANUAL TRANSFER SWITCH	480V Power	
P-005-H	5"	4 - #600 KCMIL W 1#500 GND	PVC SCHEDULE 40	2000 KW STANDBY GENERATOR	GENERATOR MANUAL TRANSFER SWITCH	480V Power	
P-005-I	5"	4 - #600 KCMIL W 1#500 GND	PVC SCHEDULE 40	2000 KW STANDBY GENERATOR	GENERATOR MANUAL TRANSFER SWITCH	480V Power	
P-005-J	5"	4 - #600 KCMIL W 1#500 GND	PVC SCHEDULE 40	2000 KW STANDBY GENERATOR	GENERATOR MANUAL TRANSFER SWITCH	480V Power	

CABLE AND CONDUIT SCHEDULE - WEST PARISH WTF							
CONDUIT NO.	SIZE	CABLE & SIZE	CONDUIT TYPE	FROM	TO	PURPOSE	REMARKS
P-DB-7-SPARE-A	5"	SPARE	PVC SCHEDULE 40	2000 KW STANDBY GENERATOR	GENERATOR MANUAL TRANSFER SWITCH	480V Power	
P-DB-7-SPARE-B	5"	SPARE	PVC SCHEDULE 40	2000 KW STANDBY GENERATOR	GENERATOR MANUAL TRANSFER SWITCH	480V Power	
P-006-A	5"	4 - #600 KCMIL W 1#500 GND	PVC SCHEDULE 40	GENERATOR MANUAL TRANSFER SWITCH	SWGR-01	480V Power	
P-006-B	5"	4 - #600 KCMIL W 1#500 GND	PVC SCHEDULE 40	GENERATOR MANUAL TRANSFER SWITCH	SWGR-01	480V Power	
P-006-C	5"	4 - #600 KCMIL W 1#500 GND	PVC SCHEDULE 40	GENERATOR MANUAL TRANSFER SWITCH	SWGR-01	480V Power	
P-006-D	5"	4 - #600 KCMIL W 1#500 GND	PVC SCHEDULE 40	GENERATOR MANUAL TRANSFER SWITCH	SWGR-01	480V Power	
P-006-E	5"	4 - #600 KCMIL W 1#500 GND	PVC SCHEDULE 40	GENERATOR MANUAL TRANSFER SWITCH	SWGR-01	480V Power	
P-006-F	5"	4 - #600 KCMIL W 1#500 GND	PVC SCHEDULE 40	GENERATOR MANUAL TRANSFER SWITCH	SWGR-01	480V Power	
P-006-G	5"	4 - #600 KCMIL W 1#500 GND	PVC SCHEDULE 40	GENERATOR MANUAL TRANSFER SWITCH	SWGR-01	480V Power	
P-006-H	5"	4 - #600 KCMIL W 1#500 GND	PVC SCHEDULE 40	GENERATOR MANUAL TRANSFER SWITCH	SWGR-01	480V Power	

CABLE AND CONDUIT SCHEDULE - WEST PARISH WTF							
CONDUIT NO.	SIZE	CABLE & SIZE	CONDUIT TYPE	FROM	TO	PURPOSE	REMARKS
P-006-I	5"	4 - #600 KCMIL W 1#500 GND	PVC SCHEDULE 40	GENERATOR MANUAL TRANSFER SWITCH	SWGR-01	480V Power	
P-006-J	5"	4 - #600 KCMIL W 1#500 GND	PVC SCHEDULE 40	GENERATOR MANUAL TRANSFER SWITCH	SWGR-01	480V Power	
P-DB-6-SPARE-A	5"	SPARE	PVC SCHEDULE 40	GENERATOR MANUAL TRANSFER SWITCH	SWGR-01	480V Power	
P-DB-6-SPARE-B	5"	SPARE	PVC SCHEDULE 40	GENERATOR MANUAL TRANSFER SWITCH	SWGR-01	480V Power	
P-007-A	5"	SPARE	PVC SCHEDULE 40	MH # 2 (FUTURE POWER SOURCE)	SWGR-01	480V Power	
P-007-B	5"	SPARE	PVC SCHEDULE 40	MH # 2 (FUTURE POWER SOURCE)	SWGR-01	480V Power	
P-007-C	5"	SPARE	PVC SCHEDULE 40	MH # 2 (FUTURE POWER SOURCE)	SWGR-01	480V Power	
P-007-D	5"	SPARE	PVC SCHEDULE 40	MH # 2 (FUTURE POWER SOURCE)	SWGR-01	480V Power	
P-007-E	5"	SPARE	PVC SCHEDULE 40	MH # 2 (FUTURE POWER SOURCE)	SWGR-01	480V Power	
P-007-F	5"	SPARE	PVC SCHEDULE 40	MH # 2 (FUTURE POWER SOURCE)	SWGR-01	480V Power	

CABLE AND CONDUIT SCHEDULE - WEST PARISH WTF							
CONDUIT NO.	SIZE	CABLE & SIZE	CONDUIT TYPE	FROM	TO	PURPOSE	REMARKS
P-007-G	5"	SPARE	PVC SCHEDULE 40	MH # 2 (FUTURE POWER SOURCE)	SWGR-01	480V Power	
P-007-H	5"	SPARE	PVC SCHEDULE 40	MH # 2 (FUTURE POWER SOURCE)	SWGR-01	480V Power	
P-007-I	5"	SPARE	PVC SCHEDULE 40	MH # 2 (FUTURE POWER SOURCE)	SWGR-01	480V Power	
P-007-J	5"	SPARE	PVC SCHEDULE 40	MH # 2 (FUTURE POWER SOURCE)	SWGR-01	480V Power	
P-DB-8-SPARE-A	5"	SPARE	PVC SCHEDULE 40	SWGR-01	MH # (FUTURE POWER SOURCE)	480V Power	
P-DB-8-SPARE-B	5"	SPARE	PVC SCHEDULE 40	SWGR-01	MH # (FUTURE POWER SOURCE)	480V Power	
P-008-A	5"	3 - #600 KCMIL W 1#500 GND	PVC SCHEDULE 40	SWGR-01	SWGR-02 BUS "A"	480V Power	
P-008-B	5"	3 - #600 KCMIL W 1#500 GND	PVC SCHEDULE 40	SWGR-01	SWGR-02 BUS "A"	480V Power	
P-008-C	5"	3 - #600 KCMIL W 1#500 GND	PVC SCHEDULE 40	SWGR-01	SWGR-02 BUS "A"	480V Power	
P-008-D	5"	3 - #600 KCMIL W 1#500 GND	PVC SCHEDULE 40	SWGR-01	SWGR-02 BUS "A"	480V Power	

CABLE AND CONDUIT SCHEDULE - WEST PARISH WTF							
CONDUIT NO.	SIZE	CABLE & SIZE	CONDUIT TYPE	FROM	TO	PURPOSE	REMARKS
P-008-E	5"	3 - #600 KCMIL W 1#500 GND	PVC SCHEDULE 40	SWGR-01	SWGR-02 BUS "A"	480V Power	
P-008-F	5"	3 - #600 KCMIL W 1#500 GND	PVC SCHEDULE 40	SWGR-01	SWGR-02 BUS "A"	480V Power	
P-008-G	5"	3 - #600 KCMIL W 1#500 GND	PVC SCHEDULE 40	SWGR-01	SWGR-02 BUS "A"	480V Power	
P-008-H	5"	3 - #600 KCMIL W 1#500 GND	PVC SCHEDULE 40	SWGR-01	SWGR-02 BUS "A"	480V Power	
P-008-I	5"	3 - #600 KCMIL W 1#500 GND	PVC SCHEDULE 40	SWGR-01	SWGR-02 BUS "A"	480V Power	
P-008-J	5"	3 - #600 KCMIL W 1#500 GND	PVC SCHEDULE 40	SWGR-01	SWGR-02 BUS "A"	480V Power	
P-DB-9A-SPARE-A	5"	SPARE	PVC SCHEDULE 40	SWGR-01	SWGR-02 BUS "A"	480V Power	
P-DB-9A-SPARE-B	5"	SPARE	PVC SCHEDULE 40	SWGR-01	SWGR-02 BUS "A"	480V Power	
P-009-A	5"	3 - #600 KCMIL W 1#500 GND	PVC SCHEDULE 40	SWGR-01	SWGR-02 BUS "B"	480V Power	
P-009-B	5"	3 - #600 KCMIL W 1#500 GND	PVC SCHEDULE 40	SWGR-01	SWGR-02 BUS "B"	480V Power	

CABLE AND CONDUIT SCHEDULE - WEST PARISH WTF							
CONDUIT NO.	SIZE	CABLE & SIZE	CONDUIT TYPE	FROM	TO	PURPOSE	REMARKS
P-009-C	5"	3 - #600 KCMIL W 1#500 GND	PVC SCHEDULE 40	SWGR-01	SWGR-02 BUS "B"	480V Power	
P-009-D	5"	3 - #600 KCMIL W 1#500 GND	PVC SCHEDULE 40	SWGR-01	SWGR-02 BUS "B"	480V Power	
P-009-E	5"	3 - #600 KCMIL W 1#500 GND	PVC SCHEDULE 40	SWGR-01	SWGR-02 BUS "B"	480V Power	
P-009-F	5"	3 - #600 KCMIL W 1#500 GND	PVC SCHEDULE 40	SWGR-01	SWGR-02 BUS "B"	480V Power	
P-009-G	5"	3 - #600 KCMIL W 1#500 GND	PVC SCHEDULE 40	SWGR-01	SWGR-02 BUS "B"	480V Power	
P-009-H	5"	3 - #600 KCMIL W 1#500 GND	PVC SCHEDULE 40	SWGR-01	SWGR-02 BUS "B"	480V Power	
P-009-I	5"	3 - #600 KCMIL W 1#500 GND	PVC SCHEDULE 40	SWGR-01	SWGR-02 BUS "B"	480V Power	
P-009-J	5"	3 - #600 KCMIL W 1#500 GND	PVC SCHEDULE 40	SWGR-01	SWGR-02 BUS "B"	480V Power	
P-DB-9B-SPARE-C	5"	SPARE	PVC SCHEDULE 40	SWGR-01	SWGR-02 BUS "B"	480V Power	
P-DB-9B-SPARE-D	5"	SPARE	PVC SCHEDULE 40	SWGR-01	SWGR-02 BUS "B"	480V Power	

CABLE AND CONDUIT SCHEDULE - WEST PARISH WTF							
CONDUIT NO.	SIZE	CABLE & SIZE	CONDUIT TYPE	FROM	TO	PURPOSE	REMARKS
P-010-A	5"	3 - #600 KCMIL W 1#3/0 GND	PVC SCHEDULE 40	SWGR-02 BUS "A"	ATS-4A-DWB	480V Power	VIA PB-4A-DW AND PB-4C-DW
P-010-B	5"	3 - #600 KCMIL W 1#3/0 GND	PVC SCHEDULE 40	SWGR-02 BUS "A"	ATS-4A-DWB	480V Power	VIA PB-4A-DW AND PB-4C-DW
P-010-C	5"	3 - #600 KCMIL W 1#3/0 GND	PVC SCHEDULE 40	SWGR-02 BUS "A"	ATS-4A-DWB	480V Power	VIA PB-4A-DW AND PB-4C-DW
P-DB-10A-SPARE-A	5"	SPARE	PVC SCHEDULE 40	SWGR-02 BUS "A"	DEWATERING BUILDING "PB-4A-DW"	480V Power	
P-011-A	5"	3 - #600 KCMIL W 1#1/0 GND	PVC SCHEDULE 40	SWGR-02 BUS "A"	EXISTING RAPID SAND FILTER MAIN SWITCHGEAR	480V Power	
P-011-B	5"	3 - #600 KCMIL W 1#1/0 GND	PVC SCHEDULE 40	SWGR-02 BUS "A"	EXISTING RAPID SAND FILTER MAIN SWITCHGEAR	480V Power	
P-DB-11A-SPARE-A	5"	SPARE	PVC SCHEDULE 40	SWGR-02 BUS "A"	EXISTING RAPID SAND FILTER MAIN SWITCHGEAR	480V Power	
P-012	5"	3 - #600 KCMIL W 1#3 GND	PVC SCHEDULE 40	SWGR-02 BUS "A"	ATS-WATERSHED	480V Power	
P-013-A	5"	3 - #600 KCMIL W 1#1/0 GND	PVC SCHEDULE 40	SWGR-02 BUS "A"	EXISTING MCC-5 BACKWASH FACILITY	480V Power	

CABLE AND CONDUIT SCHEDULE - WEST PARISH WTF							
CONDUIT NO.	SIZE	CABLE & SIZE	CONDUIT TYPE	FROM	TO	PURPOSE	REMARKS
P-013-B	5"	3 - #600 KCMIL W 1#1/0 GND	PVC SCHEDULE 40	SWGR-02 BUS "A"	EXISTING MCC-5 BACKWASH FACILITY	480V Power	
P-DB-11A-SPARE-B	5"	SPARE	PVC SCHEDULE 40	SWGR-02 BUS "A"	EXISTING MCC-5 BACKWASH FACILITY	480V Power	
P-014-A	5"	3 - #600 KCMIL W 1#3/0 GND	PVC SCHEDULE 40	SWGR-02 BUS "B"	ATS-4B-DWB	480V Power	VIA PB-4A-DW AND PB-4C-DW
P-014-B	5"	3 - #600 KCMIL W 1#3/0 GND	PVC SCHEDULE 40	SWGR-02 BUS "B"	ATS-4B-DWB	480V Power	VIA PB-4A-DW AND PB-4C-DW
P-014-C	5"	3 - #600 KCMIL W 1#3/0 GND	PVC SCHEDULE 40	SWGR-02 BUS "B"	ATS-4B-DWB	480V Power	VIA PB-4A-DW AND PB-4C-DW
P-DB-10B-SPARE-A	5"	SPARE	PVC SCHEDULE 40	SWGR-02 BUS "B"	DEWATERING BUILDING "PB-4B-DW"	480V Power	
P-015	5"	3 - #600 KCMIL W 1#3 GND	PVC SCHEDULE 40	SWGR-02 BUS "B"	ATS-WATERSHED	480V Power	
P-DB-11B-SPARE-A	5"	SPARE	PVC SCHEDULE 40	SWGR-02 BUS "B"	ATS-WATERSHED	480V Power	
P-016-A	5"	3 - #600 KCMIL W 1#1/0 GND	PVC SCHEDULE 40	SWGR-02 BUS "B"	EXISTING MCC-5 BACKWASH FACILITY	480V Power	

CABLE AND CONDUIT SCHEDULE - WEST PARISH WTF							
CONDUIT NO.	SIZE	CABLE & SIZE	CONDUIT TYPE	FROM	TO	PURPOSE	REMARKS
P-016-B	5"	3 - #600 KCMIL W 1#1/0 GND	PVC SCHEDULE 40	SWGR-02 BUS "B"	EXISTING MCC-5 BACKWASH FACILITY	480V Power	
P-017-A	5"	3 - #600 KCMIL W 1#3/0 GND	PVC SCHEDULE 40	SWGR-03	ATS-4A-DWB	480V Power	VIA PB-4B-DW AND PB-4D-DW
P-017-B	5"	3 - #600 KCMIL W 1#3/0 GND	PVC SCHEDULE 40	SWGR-03	ATS-4A-DWB	480V Power	VIA PB-4B-DW AND PB-4D-DW
P-017-C	5"	3 - #600 KCMIL W 1#3/0 GND	PVC SCHEDULE 40	SWGR-03	ATS-4A-DWB	480V Power	VIA PB-4B-DW AND PB-4D-DW
P-018-A	5"	3 - #600 KCMIL W 1#3/0 GND	PVC SCHEDULE 40	SWGR-03	ATS-4B-DWB	480V Power	VIA PB-4B-DW AND PB-4D-DW
P-018-B	5"	3 - #600 KCMIL W 1#3/0 GND	PVC SCHEDULE 40	SWGR-03	ATS-4B-DWB	480V Power	VIA PB-4B-DW AND PB-4D-DW
P-018-C	5"	3 - #600 KCMIL W 1#3/0 GND	PVC SCHEDULE 40	SWGR-03	ATS-4B-DWB	480V Power	VIA PB-4B-DW AND PB-4D-DW
P-DB-12A-SPARE-A	5"	SPARE	PVC SCHEDULE 40	SWGR-03	ATS-4A-DWB	480V Power	
P-DB-12B-SPARE-A	5"	SPARE	PVC SCHEDULE 40	SWGR-03	ATS-4B-DWB	480V Power	
P-DB-13A-SPARE-A	5"	SPARE	PVC SCHEDULE 40	SWGR-03	ATS-4A-DWB	480V Power	

CABLE AND CONDUIT SCHEDULE - WEST PARISH WTF							
CONDUIT NO.	SIZE	CABLE & SIZE	CONDUIT TYPE	FROM	TO	PURPOSE	REMARKS
P-DB-13B-SPARE-A	5"	SPARE	PVC SCHEDULE 40	SWGR-03	ATS-4B-DWB	480V Power	
P-019-A	5"	3 - #600 KCMIL W 1#3/0 GND	PVC SCHEDULE 40	EXISTING 800 KW STANDBY GENERATOR	GENERATOR MANUAL TRANSFER SWITCH	480V Power	
P-019-B	5"	3 - #600 KCMIL W 1#3/0 GND	PVC SCHEDULE 40	EXISTING 800 KW STANDBY GENERATOR	GENERATOR MANUAL TRANSFER SWITCH	480V Power	
P-019-C	5"	3 - #600 KCMIL W 1#3/0 GND	PVC SCHEDULE 40	EXISTING 800 KW STANDBY GENERATOR	GENERATOR MANUAL TRANSFER SWITCH	480V Power	
P-020-A	5"	3 - #600 KCMIL W 1#3/0 GND	PVC SCHEDULE 40	GENERATOR MANUAL TRANSFER SWITCH	SWGR-03	480V Power	
P-020-B	5"	3 - #600 KCMIL W 1#3/0 GND	PVC SCHEDULE 40	GENERATOR MANUAL TRANSFER SWITCH	SWGR-03	480V Power	
P-020-C	5"	3 - #600 KCMIL W 1#3/0 GND	PVC SCHEDULE 40	GENERATOR MANUAL TRANSFER SWITCH	SWGR-03	480V Power	
P-DB-15A-SPARE-A	5"	SPARE	PVC SCHEDULE 40	800 KW GENERATOR MANUAL TRANSFER SWITCH	SWGR-03	480V Power	
P-021-A	5"	3 - #600 KCMIL W 1#1/0 GND	PVC SCHEDULE 40	SWGR-03	EXISTING RAPID SAND FILTER MAIN SWITCHGEAR	480V Power	

CABLE AND CONDUIT SCHEDULE - WEST PARISH WTF							
CONDUIT NO.	SIZE	CABLE & SIZE	CONDUIT TYPE	FROM	TO	PURPOSE	REMARKS
P-021-B	5"	3 - #600 KCMIL W 1#1/0 GND	PVC SCHEDULE 40	SWGR-03	EXISTING RAPID SAND FILTER MAIN SWITCHGEAR	480V Power	
P-022	5"	3 - #600 KCMIL W 1#3 GND	PVC SCHEDULE 40	ATS-WATERSHED	EXISTING DPWB WATERSHED BUILDING	480V Power	
P-023	1"	2 - #10 AWG W 1#12 GND	PVC SCHEDULE 40	ADMIN BUILDING (LP-1A-ADM)	GATE 3	208V Power	
P-DB-19-SPARE-A	1"	SPARE	PVC SCHEDULE 40	ADMIN BUILDING	GATE 3	208V Power	
P-023.1	1"	2 - #10 AWG W 1#10 GND	PVC SCHEDULE 40	EXISTING RAPID SAND FILTER BUILDING	GATE 4	208V Power	
P-DB-19-SPARE-B	1"	SPARE	PVC SCHEDULE 40	EXISTING RAPID SAND FILTER BUILDING	GATE 4	208V Power	
P-024	1"	2 - #8 AWG W 1#10 GND	PVC SCHEDULE 40	ADMIN BUILDING (LP-1A-ADM)	GATE 2	208V Power	
P-DB-20-SPARE-A	1"	SPARE	PVC SCHEDULE 40	ADMIN BUILDING	GATE 2	208V Power	
P-025	1"	2 - 6 AWG W 1#10 GND	PVC SCHEDULE 40	ADMIN BUILDING (LP-EV-ADM)	EV CHARGER 1	208V Power	
P-026	1"	2 - 6 AWG W 1#10 GND	PVC SCHEDULE 40	ADMIN BUILDING (LP-EV-ADM)	EV CHARGER 2	208V Power	

CABLE AND CONDUIT SCHEDULE - WEST PARISH WTF							
CONDUIT NO.	SIZE	CABLE & SIZE	CONDUIT TYPE	FROM	TO	PURPOSE	REMARKS
P-027	1"	2 - 6 AWG W 1#10 GND	PVC SCHEDULE 40	ADMIN BUILDING (LP-EV-ADM)	EV CHARGER 3	208V Power	
P-028	1"	2 - 6 AWG W 1#10 GND	PVC SCHEDULE 40	ADMIN BUILDING (LP-EV-ADM)	EV CHARGER 4	208V Power	
P-029	1"	2 - 6 AWG W 1#10 GND	PVC SCHEDULE 40	ADMIN BUILDING (LP-EV-ADM)	EV CHARGER 5	208V Power	
P-030	1"	2 - 6 AWG W 1#10 GND	PVC SCHEDULE 40	ADMIN BUILDING (LP-EV-ADM)	EV CHARGER 6	208V Power	
P-DB-22-SPARE-A	1"	SPARE	PVC SCHEDULE 40	ADMIN BUILDING	EV CHARGER	208V Power	
-	-	-	-	-	-	-	-
P-DB-25-SPARE-A	2"	SPARE	PVC SCHEDULE 40	DEWATERING BUILDING	WASTE WASHWATER TANK (WWT)		
P-032	1"	3 - #12 AWG W 1#12 GND	PVC SCHEDULE 40	MCC-2A	SLS-01/LCP-01	480V Power	
P-DB-16-SPARE-A	1"	SPARE	PVC SCHEDULE 40	MCC-2A	SLS-01	480V Power	
P-033	1"	3 - #12 AWG W 1#12 GND	PVC SCHEDULE 40	MCC-2B	SLS-02/LCP-02	480V Power	
P-DB-17-SPARE-A	1"	SPARE	PVC SCHEDULE 40	MCC-2B	SLS-02	480V Power	

CABLE AND CONDUIT SCHEDULE - WEST PARISH WTF							
CONDUIT NO.	SIZE	CABLE & SIZE	CONDUIT TYPE	FROM	TO	PURPOSE	REMARKS
P-033.1	1 1/2"	4 - #2 AWG W 1#8 GND	PVC SCHEDULE 40	LP-1-CHEM-TB	GENERATOR PANEL	208V Power	
P-033.2	1"	2 - #10 AWG W 1#10 GND	PVC SCHEDULE 40	LP-3A-ADM	T-70740 (LAB WASTE HOLDING TANK)	120V Power	VIA HH #2B
P-033.3	1"	2 - #10 AWG W 1#10 GND	PVC SCHEDULE 40	LP-1-PLUMB-TB	METER CHAMBER	120V Power	
P-033.4	1"	2 - #6 AWG W 1#10 GND	PVC SCHEDULE 40	LP-1-PLUMB-TB	SP-03	120V Power	
ADMIN C&C							
P-034-A	5"	3 - #600 KCMIL W 1#1/0 GND	RGS	SWGR-02 BUS "A"	ATS-MAIN-ADM	480V Power	
P-034-B	5"	3 - #600 KCMIL W 1#1/0 GND	RGS	SWGR-02 BUS "A"	ATS-MAIN-ADM	480V Power	
P-035-A	5"	3 - #600 KCMIL W 1#1/0 GND	RGS	SWGR-02 BUS "B"	ATS-MAIN-ADM	480V Power	
P-035-B	5"	3 - #600 KCMIL W 1#1/0 GND	RGS	SWGR-02 BUS "B"	ATS-MAIN-ADM	480V Power	
P-036-A	5"	3 - #600 KCMIL W 1#1/0 GND	RGS	ATS-MAIN-ADM	PP-MAIN-ADM	480V Power	
P-036-B	5"	3 - #600 KCMIL W 1#1/0 GND	RGS	ATS-MAIN-ADM	PP-MAIN-ADM	480V Power	

CABLE AND CONDUIT SCHEDULE - WEST PARISH WTF							
CONDUIT NO.	SIZE	CABLE & SIZE	CONDUIT TYPE	FROM	TO	PURPOSE	REMARKS
P-037	2"	3 - #4/0 AWG W 1#6 GND	RGS	PP-MAIN-ADM	PP-1-ADM	480V Power	
P-038	2"	3 - #4/0 AWG W 1#6 GND	RGS	PP-MAIN-ADM	PP-2-ADM	480V Power	
P-039-A	3"	3 - #350 KCMIL W 1#1 GND	RGS	PP-MAIN-ADM	PP-3-ADM	480V Power	
P-039-B	3"	3 - #350 KCMIL W 1#1 GND	RGS	PP-MAIN-ADM	PP-3-ADM	480V Power	
P-040	2"	3 - #2 AWG W 1#8 GND	RGS	PP-MAIN-ADM	DSW-UPS-ADM	480V Power	
-	-	-	-	-	-	-	-
P-042	2"	3 - #2 AWG W 1#8 GND	RGS	DSW-UPS-ADM	UPS-ADM	240V Power	
P-043	2"	4 - #2 AWG W 1#8 GND	RGS	UPS-ADM	LP-UPS-ADM	240V Power	
P-044	1"	3 - #6 AWG W 1#10 GND	RGS	PP-MAIN-ADM	DSW-TX-UPS-EMER-1-ADM	480V Power	
P-045	1"	3 - #6 AWG W 1#10 GND	RGS	DSW-TX-UPS-EMER-1-ADM	TX-UPS-EMER-1-ADM	480V Power	
P-046	1 1/2"	3 - #3 AWG W 1#8 GND	RGS	TX-UPS-EMER-1-ADM	UPS-EMER-1-ADM	240V Power	
P-047	1 1/2"	3 - #3 AWG W 1#8 GND	RGS	UPS-EMER-1-ADM	LP-UPS-EMER-1-ADM	240V Power	
P-047.1	1 1/2"	3 - #1 AWG W 1#6 GND	RGS	PP-MAIN-ADM	DSW-TX-EV-ADM	480V Power	
P-047.2	1 1/2"	3 - #1 AWG W 1#6 GND	RGS	DSW-TX-EV-ADM	TX-EV-ADM	480V Power	
P-047.3	2 1/2"	4 - #250 KCMIL W 1#4 GND	RGS	TX-EV-ADM	LP-EV-ADM	208V Power	

CABLE AND CONDUIT SCHEDULE - WEST PARISH WTF							
CONDUIT NO.	SIZE	CABLE & SIZE	CONDUIT TYPE	FROM	TO	PURPOSE	REMARKS
P-048	3/4"	3 - #10 AWG W 1#10 GND	RGS	PP-1-ADM	DSW-CWP-01	480V Power	
P-048.1	3/4"	3 - #10 AWG W 1#10 GND	RGS	DSW-CWP-01	VFD-CWP-01	480V Power	
P-049	3/4"	3 - #10 AWG W 1#10 GND	RGS	VFD-CWP-01	CWP-01	480V Power	
P-050	3/4"	3 - #10 AWG W 1#10 GND	RGS	PP-1-ADM	DSW-CWP-02 (STANDBY)	480V Power	
P-050.1	3/4"	3 - #10 AWG W 1#10 GND	RGS	DSW-CWP-02 (STANDBY)	VFD-CWP-02 (STANDBY)	480V Power	
P-051	3/4"	3 - #10 AWG W 1#10 GND	RGS	VFD-CWP-02 (STANDBY)	CWP-02 (STANDBY)	480V Power	
P-052	1"	3 - #6 AWG W 1#10 GND	RGS	PP-1-ADM	TX-1-ADM	480V Power	
P-053	1"	4 - #3 AWG W 1#8 GND	RGS	TX-1-ADM	LP-1A-ADM	208V Power	
P-054	3/4"	3 - #12 AWG W 1#12 GND	RGS	PP-1-ADM	DSW-SP-01	480V Power	
P-055	3/4"	3 - #12 AWG W 1#12 GND	RGS	DSW-SP-01	SP-01	480V Power	
P-056	3/4"	3 - #12 AWG W 1#12 GND	RGS	PP-1-ADM	DSW-EUH-53	480V Power	
P-057	3/4"	3 - #12 AWG W 1#12 GND	RGS	DSW-EUH-53	EUH-53	480V Power	
P-058	1"	3 - #8 AWG W 1#10 GND	RGS	PP-1-ADM	DSW-ELEVATOR	480V Power	
P-059	1"	3 - #8 AWG W 1#10 GND	RGS	DSW-ELEVATOR	ELEVATOR	480V Power	
P-060	3/4"	3 - #10 AWG W 1#10 GND	RGS	PP-2-ADM	DSW-WH-01	480V Power	
P-061	3/4"	3 - #10 AWG W 1#10 GND	RGS	DSW-WH-01	WH-01	480V Power	

CABLE AND CONDUIT SCHEDULE - WEST PARISH WTF							
CONDUIT NO.	SIZE	CABLE & SIZE	CONDUIT TYPE	FROM	TO	PURPOSE	REMARKS
P-062	3/4"	3 - #10 AWG W 1#10 GND	RGS	PP-2-ADM	DSW-WH-02	480V Power	
P-063	3/4"	3 - #10 AWG W 1#10 GND	RGS	DSW-WH-02	WH-02	480V Power	
P-064	2"	3 - #4/0 AWG W 1#4 GND	RGS	PP-2-ADM	TX-2-ADM	480V Power	
P-065	3"	4 - #600 KCMIL W 1#3 GND	RGS	TX-2-ADM	LP-2-ADM	480V Power	
P-066	3/4"	3 - #8 AWG W 1#10 GND	RGS	PP-3-ADM	DSW-VRF-01	480V Power	
P-067	3/4"	3 - #8 AWG W 1#10 GND	RGS	DSW-VRF-01	VRF-01	480V Power	
P-068	3/4"	3 - #10 AWG W 1#10 GND	RGS	PP-3-ADM	DSW-VRF-02	480V Power	
P-069	3/4"	3 - #10 AWG W 1#10 GND	RGS	DSW-VRF-02	VRF-02	480V Power	
P-070	3/4"	3 - #10 AWG W 1#10 GND	RGS	PP-3-ADM	DSW-VRF-03	480V Power	
P-071	3/4"	3 - #10 AWG W 1#10 GND	RGS	DSW-VRF-03	VRF-03	480V Power	
P-072	3/4"	3 - #8 AWG W 1#10 GND	RGS	PP-3-ADM	DSW-VRF-04	480V Power	
P-073	3/4"	3 - #8 AWG W 1#10 GND	RGS	DSW-VRF-04	VRF-04	480V Power	
P-074	3/4"	3 - #10 AWG W 1#10 GND	RGS	PP-3-ADM	DSW-VRF-05	480V Power	
P-075	3/4"	3 - #10 AWG W 1#10 GND	RGS	DSW-VRF-05	VRF-05	480V Power	
P-076	1 1/2"	3 - #2 AWG W 1#6 GND	RGS	PP-3-ADM	DSW-DOAS-01	480V Power	

CABLE AND CONDUIT SCHEDULE - WEST PARISH WTF							
CONDUIT NO.	SIZE	CABLE & SIZE	CONDUIT TYPE	FROM	TO	PURPOSE	REMARKS
P-077	1 1/2"	3 - #2 AWG W 1#6 GND	RGS	DSW-DOAS-01	DOAS-01	480V Power	
P-078	1 1/2"	3 - #2 AWG W 1#6 GND	RGS	PP-3-ADM	DSW-DOAS-02	480V Power	
P-079	1 1/2"	3 - #2 AWG W 1#6 GND	RGS	DSW-DOAS-02	DOAS-02	480V Power	
P-080	2"	3 - #3/0 AWG W 1#6 GND	RGS	PP-3-ADM	TX-3-ADM	480V Power	
P-081	2 1/2"	4 - #250 KCMIL W 1#4 GND	RGS	TX-3-ADM	LP-3-ADM	480V Power	
P-082	3/4"	3 - #12 AWG W 1#12 GND	RGS	PP-3-ADM	DSW-EF-19	480V Power	
P-083	3/4"	3 - #12 AWG W 1#12 GND	RGS	DSW-EF-19	EF-19	480V Power	
-	-	-	-	-	-	-	-
-	-	-	-	-	-	-	-
P-086	3/4"	3 - #12 AWG W 1#12 GND	RGS	LP-1A-ADM	DSW-EWH-01	208V Power	
P-087	3/4"	3 - #12 AWG W 1#12 GND	RGS	DSW-EWH-01	EWH-01	208V Power	
P-088	3/4"	3 - #12 AWG W 1#12 GND	RGS	LP-1A-ADM	DSW-EWH-02	208V Power	
P-089	3/4"	3 - #12 AWG W 1#12 GND	RGS	DSW-EWH-02	EWH-02	208V Power	
P-090	3/4"	2 - #12 AWG W 1#12 GND	RGS	LP-1A-ADM	GMU-01	120V Power	
-	-	-	-	-	-	-	-
-	-	-	-	-	-	-	-
-	-	-	-	-	-	-	-

CABLE AND CONDUIT SCHEDULE - WEST PARISH WTF							
CONDUIT NO.	SIZE	CABLE & SIZE	CONDUIT TYPE	FROM	TO	PURPOSE	REMARKS
P-094	3/4"	2 - #12 AWG W 1#12 GND	RGS	LP-1A-ADM	ELEVATOR F/A CONTROLLER	120V Power	
P-095	3/4"	2 - #12 AWG W 1#12 GND	RGS	LP-1A-ADM	DDC-11	120V Power	
P-096	3/4"	2 - #12 AWG W 1#12 GND	RGS	LP-1A-ADM	LCS-CWP-01	120V Power	
P-097	3/4"	2 - #12 AWG W 1#12 GND	RGS	LP-1A-ADM	LCS-CWP-02	120V Power	
P-098	1 1/2"	4 - #2 AWG W 1#8 GND	RGS	LP-2-ADM	LP-2A-ADM	208V Power	
P-099	1 1/2"	4 - #2 AWG W 1#8 GND	RGS	LP-2-ADM	LP-2B-ADM	208V Power	
P-100	1 1/2"	4 - #2 AWG W 1#8 GND	RGS	LP-2-ADM	LP-2C-ADM	208V Power	
P-101	1 1/2"	4 - #2 AWG W 1#8 GND	RGS	LP-2-ADM	LP-BR-ADM	208V Power	
P-102	2"	4 - #1/0 AWG W 1#6 GND	RGS	LP-2-ADM	LP-LAB-ADM	208V Power	
P-103	1 1/2"	4 - #2 AWG W 1#8 GND	RGS	LP-2-ADM	LP-2D-ADM	208V Power	
P-104	3/4"	2 - #12 AWG W 1#12 GND	RGS	LP-2A-ADM	BC-01	208V Power	
P-105	3/4"	2 - #12 AWG W 1#12 GND	RGS	LP-2A-ADM	FTR-07	208V Power	
P-106	3/4"	2 - #12 AWG W 1#12 GND	RGS	LP-2A-ADM	FTR-08	208V Power	
P-107	3/4"	2 - #12 AWG W 1#12 GND	RGS	LP-2A-ADM	FTR-09	208V Power	
P-108	3/4"	2 - #12 AWG W 1#12 GND	RGS	LP-2A-ADM	FTR-10	208V Power	
P-109	3/4"	2 - #12 AWG W 1#12 GND	RGS	LP-2A-ADM	FCU-05	208V Power	

CABLE AND CONDUIT SCHEDULE - WEST PARISH WTF							
CONDUIT NO.	SIZE	CABLE & SIZE	CONDUIT TYPE	FROM	TO	PURPOSE	REMARKS
P-110	3/4"	2 - #12 AWG W 1#12 GND	RGS	LP-2A-ADM	FCU-06	208V Power	
P-111	3/4"	2 - #12 AWG W 1#12 GND	RGS	LP-2A-ADM	FCU-07	208V Power	
P-112	3/4"	2 - #12 AWG W 1#12 GND	RGS	LP-2A-ADM	FCU-08	208V Power	
P-113	3/4"	2 - #12 AWG W 1#12 GND	RGS	LP-2A-ADM	FCU-09	208V Power	
P-114	3/4"	2 - #12 AWG W 1#12 GND	RGS	LP-2A-ADM	FCU-10	208V Power	
P-115	3/4"	2 - #12 AWG W 1#12 GND	RGS	LP-2A-ADM	FCU-11	208V Power	
P-116	3/4"	2 - #12 AWG W 1#12 GND	RGS	LP-2A-ADM	FCU-12	208V Power	
P-117	3/4"	2 - #12 AWG W 1#12 GND	RGS	LP-2A-ADM	FCU-13	208V Power	
P-118	3/4"	2 - #12 AWG W 1#12 GND	RGS	LP-2A-ADM	TP-02 (ROOM 1208)	120V Power	Locker Room Suite Electronic Trap Primer
P-119	3/4"	2 - #12 AWG W 1#12 GND	RGS	LP-2B-ADM	BC-02	208V Power	
P-120	3/4"	2 - #12 AWG W 1#12 GND	RGS	LP-2B-ADM	FTR-01	208V Power	
P-121	3/4"	2 - #12 AWG W 1#12 GND	RGS	LP-2B-ADM	FTR-02	208V Power	
P-122	3/4"	2 - #12 AWG W 1#12 GND	RGS	LP-2B-ADM	FTR-03	208V Power	
P-123	3/4"	2 - #12 AWG W 1#12 GND	RGS	LP-2B-ADM	FTR-04	208V Power	
P-124	3/4"	2 - #12 AWG W 1#12 GND	RGS	LP-2B-ADM	FTR-05	208V Power	

CABLE AND CONDUIT SCHEDULE - WEST PARISH WTF							
CONDUIT NO.	SIZE	CABLE & SIZE	CONDUIT TYPE	FROM	TO	PURPOSE	REMARKS
P-125	3/4"	2 - #12 AWG W 1#12 GND	RGS	LP-2B-ADM	FTR-06	208V Power	
P-126	3/4"	2 - #12 AWG W 1#12 GND	RGS	LP-2B-ADM	FCU-14	208V Power	
P-127	3/4"	2 - #12 AWG W 1#12 GND	RGS	LP-2B-ADM	FCU-15	208V Power	
P-128	3/4"	2 - #12 AWG W 1#12 GND	RGS	LP-2B-ADM	FCU-16	208V Power	
-	-	-	-	-	-	-	-
P-130	3/4"	2 - #12 AWG W 1#12 GND	RGS	LP-2B-ADM	FCU-18	208V Power	
P-131	3/4"	2 - #12 AWG W 1#12 GND	RGS	LP-2B-ADM	FCU-19	208V Power	
P-132	3/4"	2 - #12 AWG W 1#12 GND	RGS	LP-2B-ADM	FCU-20	208V Power	
P-133	3/4"	2 - #12 AWG W 1#12 GND	RGS	LP-2B-ADM	FCU-23	208V Power	
P-134	3/4"	2 - #12 AWG W 1#12 GND	RGS	LP-2C-ADM	FCU-21	120V Power	
P-135	3/4"	2 - #12 AWG W 1#12 GND	RGS	LP-2C-ADM	FCU-22	120V Power	
P-136	3/4"	2 - #12 AWG W 1#12 GND	RGS	LP-2C-ADM	WPS-01	120V Power	
P-137	3/4"	2 - #12 AWG W 1#12 GND	RGS	LP-2C-ADM	RCP-01	120V Power	
P-138	3/4"	2 - #12 AWG W 1#12 GND	RGS	LP-2C-ADM	TP-01 (ROOM 1218)	120V Power	1st Floor Admin JC Electronic Trap Primer
P-139	3/4"	2 - #12 AWG W 1#12 GND	RGS	LP-2C-ADM	BC-03	208V Power	
P-140	3/4"	2 - #12 AWG W 1#12 GND	RGS	LP-2C-ADM	RCP-02	120V Power	

CABLE AND CONDUIT SCHEDULE - WEST PARISH WTF							
CONDUIT NO.	SIZE	CABLE & SIZE	CONDUIT TYPE	FROM	TO	PURPOSE	REMARKS
-	-	-	-	-	-	-	-
P-142	3/4"	2 - #12 AWG W 1#12 GND	RGS	LP-2C-ADM	DDC-13	120V Power	
P-143	3/4"	2 - #12 AWG W 1#12 GND	RGS	LP-2C-ADM	DDC-15	120V Power	
P-143.1	3/4"	2 - #12 AWG W 1#12 GND	RGS	LP-2C-ADM	LCP-AP01	120V Power	
P-143.2	3/4"	2 - #12 AWG W 1#12 GND	RGS	LP-2C-ADM	LCP-AP02	120V Power	
P-143.3	3/4"	2 - #12 AWG W 1#12 GND	RGS	LP-2C-ADM	LCP-AP03	120V Power	
P-143.4	3/4"	2 - #12 AWG W 1#12 GND	RGS	LP-2C-ADM	FCU-24	208V Power	
P-143.5	3/4"	2 - #12 AWG W 1#12 GND	RGS	LP-2C-ADM	FCU-25	208V Power	
P-143.6	3/4"	2 - #12 AWG W 1#12 GND	RGS	LP-2C-ADM	FCU-26	208V Power	
P-143.7	3/4"	2 - #12 AWG W 1#12 GND	RGS	LP-2C-ADM	FCU-27	208V Power	
P-143.8	3/4"	2 - #12 AWG W 1#12 GND	RGS	LP-2C-ADM	FCU-28	208V Power	
P-144	3/4"	2 - #12 AWG W 1#12 GND	RGS	LP-2D-ADM	ADM LTG - (1100, 1101, 1103)	120V Power	
P-145	3/4"	2 - #12 AWG W 1#12 GND	RGS	LP-2D-ADM	ADM LTG - (1210, 1211, 1212, 1213,1214, 1215)	120V Power	
P-146	3/4"	2 - #12 AWG W 1#12 GND	RGS	LP-2D-ADM	ADM LTG - (1221, 1222,	120V Power	

CABLE AND CONDUIT SCHEDULE - WEST PARISH WTF							
CONDUIT NO.	SIZE	CABLE & SIZE	CONDUIT TYPE	FROM	TO	PURPOSE	REMARKS
					1223, 1224)		
P-147	3/4"	2 - #12 AWG W 1#12 GND	RGS	LP-2D-ADM	ADM RECP - EL.457.00	120V Power	
P-148	1"	2 - #8 AWG W 1#10 GND	PVC SCHEDULE 40	LP-2D-ADM	OUTDOOR LTG - ADMIN SOUTH	208V Power	
P-149	1"	2 - #8 AWG W 1#10 GND	PVC SCHEDULE 40	LP-2D-ADM	OUTDOOR LTG - DWB	208V Power	
P-150	3/4"	2 - #12 AWG W 1#12 GND	RGS	LP-2D-ADM	ADM LTG - (1200, 1201, 1202)	120V Power	
P-151	3/4"	2 - #12 AWG W 1#12 GND	RGS	LP-2D-ADM	ADM LTG - (1203, 1204, 1205, 1206, 1207, 1208, 1209)	120V Power	
P-152	3/4"	2 - #10 AWG W 1#10 GND	RGS	LP-2D-ADM	ADM LTG - (1216, 1217, 1218, 1219, 1220)	120V Power	
P-153	3/4"	2 - #12 AWG W 1#12 GND	RGS	LP-2D-ADM	ADM RECP - EL.457.00	120V Power	
P-154	1"	2 - #8 AWG W 1#10 GND	PVC SCHEDULE 40	LP-2D-ADM	OUTDOOR LTG - ADMIN SOUTH	208V Power	
P-155	1"	2 - #8 AWG W 1#10 GND	PVC SCHEDULE 40	LP-2D-ADM	OUTDOOR LTG - LB1/LB2	120V Power	

CABLE AND CONDUIT SCHEDULE - WEST PARISH WTF							
CONDUIT NO.	SIZE	CABLE & SIZE	CONDUIT TYPE	FROM	TO	PURPOSE	REMARKS
P-155.1	3/4"	2 - #8 AWG W 1#10 GND	RGS	LP-2D-ADM	ADM EAST RECP - EL.471.00	120V Power	
P-155.2	3/4"	2 - #8 AWG W 1#10 GND	RGS	LP-2D-ADM	ADM EAST RECP - EL.471.00	120V Power	
P-155.3	3/4"	2 - #8 AWG W 1#10 GND	RGS	LP-2D-ADM	ADM EAST RECP - EL.471.00	120V Power	
P-155.4	3/4"	2 - #12 AWG W 1#12 GND	RGS	LP-2D-ADM	ADM LTG - (1201)	120V Power	
P-155.5	3/4"	2 - #8 AWG W 1#10 GND	RGS	LP-2D-ADM	ADM EAST RECP - EL.471.00	120V Power	
P-155.6	3/4"	2 - #8 AWG W 1#10 GND	RGS	LP-2D-ADM	ADM EAST RECP - EL.471.00	120V Power	
P-155.7	3/4"	2 - #12 AWG W 1#12 GND	RGS	LP-2D-ADM	ADM LTG - (OUTSIDE CANOPY)	120V Power	
P-155.8	3/4"	2 - #12 AWG W 1#12 GND	RGS	LP-2D-ADM	ADM LTG - BREAK ROOM 1202	120V Power	
P-155.9	3/4"	2 - #12 AWG W 1#12 GND	RGS	LP-2D-ADM	ADM RECP - RECPT DSK EL.457.00	120V Power	
P-155.10	3/4"	2 - #10 AWG W 1#10 GND	RGS	LP-2D-ADM	ADM WEST RECP - EL.471.00	120V Power	
P-155.11	3/4"	2 - #12 AWG W 1#12 GND	RGS	LP-2D-ADM	ADM RECP - LOBY DISPLAY EL.471	120V Power	

CABLE AND CONDUIT SCHEDULE - WEST PARISH WTF							
CONDUIT NO.	SIZE	CABLE & SIZE	CONDUIT TYPE	FROM	TO	PURPOSE	REMARKS
P-155.12	3/4"	2 - #12 AWG W 1#12 GND	RGS	LP-2D-ADM	ADM RECP - LOBY WALL EL.471	120V Power	
P-155.13	3/4"	2 - #10 AWG W 1#10 GND	RGS	LP-2D-ADM	ADM WEST RECP - EL.471.00	120V Power	
P-155.14	3/4"	2 - #10 AWG W 1#10 GND	RGS	LP-2D-ADM	ADM WEST RECP - EL.471.00	120V Power	
P-156	3/4"	2 - #12 AWG W 1#12 GND	RGS	LP-BR-ADM	FCU-01	208V Power	
P-157	3/4"	2 - #12 AWG W 1#12 GND	RGS	LP-BR-ADM	FCU-02	208V Power	
P-158	3/4"	2 - #12 AWG W 1#12 GND	RGS	LP-BR-ADM	FCU-03	208V Power	
P-159	3/4"	2 - #12 AWG W 1#12 GND	RGS	LP-BR-ADM	FCU-04	208V Power	
P-160	3/4"	2 - #12 AWG W 1#12 GND	RGS	LP-BR-ADM	RECP BREAK RM - EL.471.00	120V Power	
P-161	3/4"	2 - #10 AWG W 1#10 GND	RGS	LP-BR-ADM	TRAINING RM - EL.471.00	120V Power	
P-162	3/4"	2 - #10 AWG W 1#10 GND	RGS	LP-BR-ADM	TRAINING RM - EL.471.00	120V Power	
P-163	3/4"	2 - #10 AWG W 1#10 GND	RGS	LP-BR-ADM	ADM EAST RECP - EL.471.00	120V Power	
P-163.1	3/4"	2 - #10 AWG W 1#10 GND	RGS	LP-BR-ADM	ADM EAST RECP - EL.471.00	120V Power	
P-163.2	3/4"	2 - #12 AWG W 1#12 GND	RGS	LP-BR-ADM	RECP BREAK RM - EL.471.00	120V Power	

CABLE AND CONDUIT SCHEDULE - WEST PARISH WTF							
CONDUIT NO.	SIZE	CABLE & SIZE	CONDUIT TYPE	FROM	TO	PURPOSE	REMARKS
P-163.3	3/4"	2 - #10 AWG W 1#10 GND	RGS	LP-BR-ADM	TRAINING RM - EL.471.00	120V Power	
P-163.4	3/4"	2 - #10 AWG W 1#10 GND	RGS	LP-BR-ADM	ADM EAST RECP - EL.471.00	120V Power	
P-163.5	3/4"	2 - #10 AWG W 1#10 GND	RGS	LP-BR-ADM	ADM EAST RECP - EL.471.00	120V Power	
P-164	3/4"	2 - #10 AWG W 1#10 GND	RGS	LP-BR-ADM	RECP BREAK RM - DISHWASHER	208V Power	
P-165	3/4"	2 - #12 AWG W 1#12 GND	RGS	LP-BR-ADM	RECP BREAK RM - EL.471.00	120V Power	
P-166	3/4"	2 - #12 AWG W 1#12 GND	RGS	LP-BR-ADM	RECP BREAK RM REFRIGERATO R	120V Power	
P-167	3/4"	2 - #12 AWG W 1#12 GND	RGS	LP-BR-ADM	RECP BREAK RM - MICROWAVE	120V Power	
P-168	3/4"	2 - #12 AWG W 1#12 GND	RGS	LP-BR-ADM	RECEP BREAK ROOM - MONITOR	120V Power	
P-168.1	3/4"	2 - #12 AWG W 1#12 GND	RGS	LP-BR-ADM	RECEP TRAINING ROOM - MONITOR	120V Power	
P-168.2	3/4"	2 - #12 AWG W 1#12 GND	RGS	LP-BR-ADM	RECEP TRAINING ROOM - MONITOR	120V Power	

CABLE AND CONDUIT SCHEDULE - WEST PARISH WTF							
CONDUIT NO.	SIZE	CABLE & SIZE	CONDUIT TYPE	FROM	TO	PURPOSE	REMARKS
P-168.3	3/4"	2 - #10 AWG W 1#10 GND	RGS	LP-BR-ADM	TRAINING RM - EL.471.00	120V Power	
P-169	3/4"	2 - #12 AWG W 1#12 GND	RGS	LP-LAB-ADM	TP-01 (Room 1221)	120V Power	Laboratory Electronic Trap Primer
P-170	3/4"	2 - #12 AWG W 1#12 GND	RGS	LP-LAB-ADM	FS (Rm 1221)	120V Power	Laboratory Emergency Shower Flow Switch
P-171	3/4"	2 - #12 AWG W 1#12 GND	RGS	LP-LAB-ADM	FS (Rm 1220)	120V Power	Microbiology Lab Emergency Eyewash Flow Switch
P-172	3/4"	2 - #12 AWG W 1#12 GND	RGS	LP-LAB-ADM	FSH-70001	120V Power	
-	-	-	-	-	-	-	-
P-173.1	3/4"	2 - #12 AWG W 1#12 GND	RGS	LP-LAB-ADM	ADM LAB RECP - EL.471.00	120V Power	
P-173.2	3/4"	2 - #12 AWG W 1#12 GND	RGS	LP-LAB-ADM	ADM LAB RECP - EL.471.00	120V Power	
P-173.3	3/4"	2 - #12 AWG W 1#12 GND	RGS	LP-LAB-ADM	ADM LAB RECP - EL.471.00	120V Power	
P-173.4	3/4"	2 - #12 AWG W 1#12 GND	RGS	LP-LAB-ADM	ADM LAB RECP - EL.471.00	120V Power	
P-173.5	3/4"	2 - #12 AWG W 1#12 GND	RGS	LP-LAB-ADM	ADM LAB RECP - EL.471.00	120V Power	

CABLE AND CONDUIT SCHEDULE - WEST PARISH WTF							
CONDUIT NO.	SIZE	CABLE & SIZE	CONDUIT TYPE	FROM	TO	PURPOSE	REMARKS
P-173.6	3/4"	2 - #12 AWG W 1#12 GND	RGS	LP-LAB-ADM	ADM LAB RECP - EL.471.00	120V Power	
P-173.7	3/4"	2 - #12 AWG W 1#12 GND	RGS	LP-LAB-ADM	ADM LAB RECP - EL.471.00	120V Power	
P-173.8	3/4"	2 - #12 AWG W 1#12 GND	RGS	LP-LAB-ADM	ADM LAB RECP - EL.471.00	120V Power	
P-173.9	3/4"	2 - #12 AWG W 1#12 GND	RGS	LP-LAB-ADM	ADM LAB RECP - EL.471.00	120V Power	
P-173.10	3/4"	2 - #12 AWG W 1#12 GND	RGS	LP-LAB-ADM	AUTOCLAVE	120V Power	
P-173.11	3/4"	2 - #12 AWG W 1#12 GND	RGS	LP-LAB-ADM	AUTOCLAVE	120V Power	
P-173.12	3/4"	2 - #12 AWG W 1#12 GND	RGS	LP-LAB-ADM	INCUBATOR	120V Power	
P-173.13	3/4"	2 - #12 AWG W 1#12 GND	RGS	LP-LAB-ADM	INCUBATOR	120V Power	
P-173.14	3/4"	2 - #12 AWG W 1#12 GND	RGS	LP-LAB-ADM	INCUBATOR	120V Power	
P-173.15	3/4"	2 - #12 AWG W 1#12 GND	RGS	LP-LAB-ADM	DRYING OVEN	120V Power	
P-173.16	3/4"	2 - #12 AWG W 1#12 GND	RGS	LP-LAB-ADM	DRYING OVEN	120V Power	
P-173.17	3/4"	2 - #12 AWG W 1#12 GND	RGS	LP-LAB-ADM	UNDECOUNTE R FREEZER	120V Power	
P-173.18	3/4"	2 - #12 AWG W 1#12 GND	RGS	LP-LAB-ADM	UNDERCOUNT ER ICE MAKER	120V Power	
P-173.19	3/4"	2 - #12 AWG W 1#12 GND	RGS	LP-LAB-ADM	FUME HOOD	120V Power	

CABLE AND CONDUIT SCHEDULE - WEST PARISH WTF							
CONDUIT NO.	SIZE	CABLE & SIZE	CONDUIT TYPE	FROM	TO	PURPOSE	REMARKS
P-173.20	3/4"	2 - #12 AWG W 1#12 GND	RGS	LP-LAB-ADM	LAB REFRIGERATOR	120V Power	
P-173.21	3/4"	2 - #12 AWG W 1#12 GND	RGS	LP-LAB-ADM	LAB REFRIGERATOR	120V Power	
P-173.22	3/4"	2 - #12 AWG W 1#12 GND	RGS	LP-LAB-ADM	RH UNDR COUNTR LAB REFRIG	120V Power	
-	-	-	-	-	-	-	-
P-173.24	3/4"	2 - #12 AWG W 1#12 GND	RGS	LP-LAB-ADM	ADM LAB RECP REG RACK- EL.471	120V Power	
P-173.25	3/4"	2 - #12 AWG W 1#12 GND	RGS	LP-LAB-ADM	ADM LAB RECP REG RACK- EL.471	120V Power	
P-173.26	3/4"	2 - #12 AWG W 1#12 GND	RGS	LP-LAB-ADM	ADM LAB RECP - EL.471.00	120V Power	
P-173.27	3/4"	2 - #12 AWG W 1#12 GND	RGS	LP-LAB-ADM	ADM LAB RECP REG RACK- EL.471	120V Power	
P-173.28	3/4"	2 - #12 AWG W 1#12 GND	RGS	LP-LAB-ADM	ADM LAB RECP REG RACK- EL.471	120V Power	
P-173.29	3/4"	2 - #10 AWG W 1#10 GND	RGS	LP-LAB-ADM	LAB DISHWASHER	208V Power	
P-174	1 1/2"	4 - #2 AWG W 1#8 GND	RGS	LP-3-ADM	LP-3A-ADM	208V Power	
P-175	1 1/2"	4 - #2 AWG W 1#8 GND	RGS	LP-3-ADM	LP-3B-ADM	208V Power	

CABLE AND CONDUIT SCHEDULE - WEST PARISH WTF							
CONDUIT NO.	SIZE	CABLE & SIZE	CONDUIT TYPE	FROM	TO	PURPOSE	REMARKS
P-176	1 1/2"	4 - #2 AWG W 1#8 GND	RGS	LP-3-ADM	LP-3C-ADM	208V Power	
P-177	2 1/2"	4 - #4/0 AWG W 1#6 GND	RGS	LP-3-ADM	LP-3D-ADM	208V Power	
P-178	3/4"	2 - #12 AWG W 1#12 GND	RGS	LP-3A-ADM	FCU-29	208V Power	
P-179	3/4"	2 - #12 AWG W 1#12 GND	RGS	LP-3A-ADM	FCU-30	208V Power	
P-180	3/4"	2 - #12 AWG W 1#12 GND	RGS	LP-3A-ADM	FCU-31	208V Power	
P-181	3/4"	2 - #12 AWG W 1#12 GND	RGS	LP-3A-ADM	FCU-32	208V Power	
P-182	3/4"	2 - #12 AWG W 1#12 GND	RGS	LP-3A-ADM	FCU-33	208V Power	
P-183	3/4"	2 - #12 AWG W 1#12 GND	RGS	LP-3A-ADM	FCU-34	208V Power	
P-184	3/4"	2 - #12 AWG W 1#12 GND	RGS	LP-3A-ADM	FCU-35	208V Power	
P-185	3/4"	2 - #12 AWG W 1#12 GND	RGS	LP-3A-ADM	FCU-36	208V Power	
P-186	3/4"	2 - #12 AWG W 1#12 GND	RGS	LP-3A-ADM	BC-04	208V Power	
P-187	1"	2 - #8 AWG W 1#10 GND	RGS	LP-3A-ADM	WH-03	208V Power	
P-188	1"	2 - #8 AWG W 1#10 GND	RGS	LP-3A-ADM	WH-04	208V Power	
P-189	3/4"	2 - #12 AWG W 1#12 GND	RGS	LP-3A-ADM	TP-01 (Room 1311)	120V Power	2nd Floor Admin JC Electronic Trap Primer
P-190	3/4"	2 - #12 AWG W 1#12 GND	RGS	LP-3A-ADM	TP-01 (Room 1313)	120V Power	2nd Floor Mech Room Electronic Trap Primer

CABLE AND CONDUIT SCHEDULE - WEST PARISH WTF							
CONDUIT NO.	SIZE	CABLE & SIZE	CONDUIT TYPE	FROM	TO	PURPOSE	REMARKS
P-191	3/4"	2 - #12 AWG W 1#12 GND	RGS	LP-3A-ADM	DOAS-1	120V Power	
P-192	3/4"	2 - #12 AWG W 1#12 GND	RGS	LP-3A-ADM	RCP-03	120V Power	
P-193	3/4"	2 - #12 AWG W 1#12 GND	RGS	LP-3A-ADM	DSW-EF-17	120V Power	
P-193.1	3/4"	2 - #12 AWG W 1#12 GND	RGS	LP-3A-ADM	LCS-70740	120V Power	
P-194	3/4"	2 - #12 AWG W 1#12 GND	RGS	DSW-EF-17	EF-17	120V Power	
P-195	3/4"	2 - #12 AWG W 1#12 GND	RGS	LP-3A-ADM	DDC-07	120V Power	
P-196	3/4"	2 - #12 AWG W 1#12 GND	RGS	LP-3B-ADM	FCU-37	208V Power	
P-197	3/4"	2 - #12 AWG W 1#12 GND	RGS	LP-3B-ADM	FCU-38	208V Power	
P-198	3/4"	2 - #12 AWG W 1#12 GND	RGS	LP-3B-ADM	FCU-39	208V Power	
P-199	3/4"	2 - #12 AWG W 1#12 GND	RGS	LP-3B-ADM	FCU-40	208V Power	
P-200	3/4"	2 - #12 AWG W 1#12 GND	RGS	LP-3B-ADM	FCU-41	208V Power	
P-201	3/4"	2 - #12 AWG W 1#12 GND	RGS	LP-3B-ADM	FCU-42	208V Power	
P-202	3/4"	2 - #12 AWG W 1#12 GND	RGS	LP-3B-ADM	FCU-43	208V Power	
P-203	3/4"	2 - #12 AWG W 1#12 GND	RGS	LP-3B-ADM	FCU-44	208V Power	
P-204	3/4"	2 - #12 AWG W 1#12 GND	RGS	LP-3B-ADM	FCU-45	208V Power	
P-205	3/4"	2 - #12 AWG W 1#12 GND	RGS	LP-3B-ADM	BC-05	208V Power	

CABLE AND CONDUIT SCHEDULE - WEST PARISH WTF							
CONDUIT NO.	SIZE	CABLE & SIZE	CONDUIT TYPE	FROM	TO	PURPOSE	REMARKS
P-206	3/4"	2 - #12 AWG W 1#12 GND	RGS	LP-3B-ADM	DOAS-2	208V Power	
P-207	3/4"	2 - #12 AWG W 1#12 GND	RGS	LP-3B-ADM	BMS-01	120V Power	
P-208	3/4"	2 - #12 AWG W 1#12 GND	RGS	LP-3B-ADM	BMS-MCP	120V Power	
P-209	3/4"	2 - #12 AWG W 1#12 GND	RGS	LP-3B-ADM	LCS-EF-21	120V Power	
P-210	3/4"	2 - #12 AWG W 1#12 GND	RGS	LP-3B-ADM	VRF CENTRALIZED CONTROLLER	120V Power	
P-211	3/4"	2 - #12 AWG W 1#12 GND	RGS	LP-3B-ADM	LCS-EF-20	120V Power	
P-212	3/4"	2 - #12 AWG W 1#12 GND	RGS	LP-3B-ADM	BMS-04	120V Power	
P-212.1	3/4"	2 - #12 AWG W 1#12 GND	RGS	LP-3B-ADM	LCP-AP04	120V Power	
P-212.2	3/4"	2 - #12 AWG W 1#12 GND	RGS	LP-3B-ADM	LCP-AP05	120V Power	
P-212.3	3/4"	2 - #12 AWG W 1#12 GND	RGS	LP-3B-ADM	LCP-AP06	120V Power	
P-213	3/4"	2 - #12 AWG W 1#12 GND	RGS	LP-3C-ADM	FCU-46	208V Power	
P-214	3/4"	2 - #12 AWG W 1#12 GND	RGS	LP-3C-ADM	FCU-47	208V Power	
P-215	3/4"	2 - #12 AWG W 1#12 GND	RGS	LP-3C-ADM	FCU-48	208V Power	
P-216	3/4"	2 - #12 AWG W 1#12 GND	RGS	LP-3C-ADM	FCU-49	208V Power	
P-217	3/4"	2 - #12 AWG W 1#12 GND	RGS	LP-3C-ADM	FCU-50	208V Power	

CABLE AND CONDUIT SCHEDULE - WEST PARISH WTF							
CONDUIT NO.	SIZE	CABLE & SIZE	CONDUIT TYPE	FROM	TO	PURPOSE	REMARKS
P-218	3/4"	2 - #12 AWG W 1#12 GND	RGS	LP-3C-ADM	FCU-51	208V Power	
P-219	3/4"	2 - #12 AWG W 1#12 GND	RGS	LP-3C-ADM	FCU-52	208V Power	
P-220	3/4"	2 - #12 AWG W 1#12 GND	RGS	LP-3C-ADM	FCU-53	208V Power	
P-221	3/4"	2 - #12 AWG W 1#12 GND	RGS	LP-3C-ADM	FCU-54	208V Power	
P-222	3/4"	2 - #12 AWG W 1#12 GND	RGS	LP-3C-ADM	FCU-55	208V Power	
-	-	-	-	-	-	-	-
P-224	3/4"	2 - #10 AWG W 1#10 GND	RGS	LP-3C-ADM	HP-01	208V Power	
P-225	3/4"	2 - #12 AWG W 1#12 GND	RGS	LP-3C-ADM	DSW-EF-18	120V Power	
P-226	3/4"	2 - #12 AWG W 1#12 GND	RGS	DSW-EF-18	EF-18	120V Power	
P-227	3/4"	2 - #12 AWG W 1#12 GND	RGS	LP-3C-ADM	DSW-EF-20	120V Power	
P-228	3/4"	2 - #12 AWG W 1#12 GND	RGS	DSW-EF-20	EF-20	120V Power	
P-229	3/4"	2 - #12 AWG W 1#12 GND	RGS	LP-3C-ADM	DSW-EF-21	120V Power	
P-230	3/4"	2 - #12 AWG W 1#12 GND	RGS	DSW-EF-21	EF-21	120V Power	
P-231	3/4"	2 - #12 AWG W 1#12 GND	RGS	LP-3C-ADM	DDC-05	120V Power	
P-231.1	3/4"	2 - #12 AWG W 1#12 GND	RGS	LP-3C-ADM	DDC-06	120V Power	
P-232	3/4"	2 - #12 AWG W 1#12 GND	RGS	LP-3C-ADM	LCS-EF-17	120V Power	

CABLE AND CONDUIT SCHEDULE - WEST PARISH WTF							
CONDUIT NO.	SIZE	CABLE & SIZE	CONDUIT TYPE	FROM	TO	PURPOSE	REMARKS
P-233	3/4"	2 - #12 AWG W 1#12 GND	RGS	LP-3C-ADM	LCS-EF-18	120V Power	
P-234	3/4"	2 - #12 AWG W 1#12 GND	RGS	LP-3C-ADM	LCS-EF-19	120V Power	
P-234.1	3/4"	2 - #12 AWG W 1#12 GND	RGS	LP-3C-ADM	IG-RCP-01 (INERT GAS PANEL)	120V Power	
P-234.2	3/4"	2 - #12 AWG W 1#12 GND	RGS	LP-3C-ADM	RELEASING PANEL COMPRESSOR	120V Power	
P-234.3	3/4"	2 - #12 AWG W 1#12 GND	RGS	LP-3C-ADM	PRE-ACTION RELEASING PANEL	120V Power	
P-235	3/4"	2 - #8 AWG W 1#10 GND	RGS	LP-3D-ADM	ADM WEST RECP - EL.485.00	120V Power	
P-236	3/4"	2 - #8 AWG W 1#10 GND	RGS	LP-3D-ADM	ADM WEST RECP - EL.485.00	120V Power	
P-237	3/4"	2 - #8 AWG W 1#10 GND	RGS	LP-3D-ADM	ADM WEST RECP - EL.485.00	120V Power	
P-238	3/4"	2 - #8 AWG W 1#10 GND	RGS	LP-3D-ADM	ADM WEST RECP - EL.485.00	120V Power	
P-239	3/4"	2 - #8 AWG W 1#10 GND	RGS	LP-3D-ADM	ADM WEST RECP - EL.485.00	120V Power	
P-240	3/4"	2 - #8 AWG W 1#10 GND	RGS	LP-3D-ADM	ADM WEST RECP - EL.485.00	120V Power	

CABLE AND CONDUIT SCHEDULE - WEST PARISH WTF							
CONDUIT NO.	SIZE	CABLE & SIZE	CONDUIT TYPE	FROM	TO	PURPOSE	REMARKS
P-241	3/4"	2 - #8 AWG W 1#10 GND	RGS	LP-3D-ADM	ADM WEST RECP - EL.485.00	120V Power	
P-242	3/4"	2 - #8 AWG W 1#10 GND	RGS	LP-3D-ADM	ADM WEST RECP - EL.485.00	120V Power	
P-243	1"	2 - #10 AWG W 1#10 GND	RGS	LP-3D-ADM	ADM RECP - EL.499.00	120V Power	
P-244	3/4"	2 - #10 AWG W 1#10 GND	RGS	LP-3D-ADM	LTG - (1300,1301,1302)	120V Power	
P-245	3/4"	2 - #12 AWG W 1#12 GND	RGS	LP-3D-ADM	LTG - (1303,1304,1305,1306, 1307,1308,1309)	120V Power	
P-246	3/4"	2 - #12 AWG W 1#12 GND	RGS	LP-3D-ADM	LTG - (1310,1311,1312)	120V Power	
P-247	3/4"	2 - #12 AWG W 1#12 GND	RGS	LP-3D-ADM	LTG - (1313,1314,1315,1316)	120V Power	
P-248	3/4"	2 - #12 AWG W 1#12 GND	RGS	LP-3D-ADM	ADM LTG - ROOF	120V Power	
P-249	3/4"	2 - #12 AWG W 1#12 GND	RGS	LP-3D-ADM	LTG - (1300)	120V Power	
P-250	3/4"	2 - #12 AWG W 1#12 GND	RGS	LP-3D-ADM	LTG - (1317,1318,1319)	120V Power	
P-251	3/4"	2 - #12 AWG W 1#12 GND	RGS	LP-3D-ADM	LTG - (1320,1321,1322)	120V Power	

CABLE AND CONDUIT SCHEDULE - WEST PARISH WTF							
CONDUIT NO.	SIZE	CABLE & SIZE	CONDUIT TYPE	FROM	TO	PURPOSE	REMARKS
P-252	3/4"	2 - #12 AWG W 1#12 GND	RGS	LP-3D-ADM	LTG - (1323,1324,1325)	120V Power	
P-253	3/4"	2 - #12 AWG W 1#12 GND	RGS	LP-3D-ADM	LTG - (1326,1327,1328,1329,1330,1331)	120V Power	
P-253.1	3/4"	2 - #8 AWG W 1#10 GND	RGS	LP-3D-ADM	ADM EAST RECP - EL.485.00	120V Power	
P-253.2	3/4"	2 - #8 AWG W 1#10 GND	RGS	LP-3D-ADM	ADM EAST RECP - EL.485.00	120V Power	
P-253.3	3/4"	2 - #8 AWG W 1#10 GND	RGS	LP-3D-ADM	ADM EAST RECP - EL.485.00	120V Power	
P-253.4	3/4"	2 - #8 AWG W 1#10 GND	RGS	LP-3D-ADM	ADM EAST RECP - EL.485.00	120V Power	
P-253.5	3/4"	2 - #8 AWG W 1#10 GND	RGS	LP-3D-ADM	ADM EAST RECP - EL.485.00	120V Power	
P-253.6	3/4"	2 - #8 AWG W 1#10 GND	RGS	LP-3D-ADM	ADM EAST RECP - EL.485.00	120V Power	
P-253.7	3/4"	2 - #8 AWG W 1#10 GND	RGS	LP-3D-ADM	ADM EAST RECP - EL.485.00	120V Power	
P-253.8	3/4"	2 - #10 AWG W 1#10 GND	RGS	LP-3D-ADM	ADM EAST RECP - EL.485.00	120V Power	

CABLE AND CONDUIT SCHEDULE - WEST PARISH WTF							
CONDUIT NO.	SIZE	CABLE & SIZE	CONDUIT TYPE	FROM	TO	PURPOSE	REMARKS
P-253.9	3/4"	2 - #10 AWG W 1#10 GND	RGS	LP-3D-ADM	RECP BREAK RM REFRIGERATOR	120V Power	
P-253.10	3/4"	2 - #10 AWG W 1#10 GND	RGS	LP-3D-ADM	RECP BREAK RM - MICROWAVE	120V Power	
P-253.11	3/4"	2 - #10 AWG W 1#10 GND	RGS	LP-3D-ADM	ADM WEST RECP - EL.485.00	120V Power	
P-254	1"	2 - #8 AWG W 1#10 GND	RGS	LP-UPS-EMER-1-ADM	EM/EXIT LTG - EL. 457,STAIR A (ADM)	120V Power	
P-255	1"	2 - #8 AWG W 1#10 GND	RGS	LP-UPS-EMER-1-ADM	EM/EXIT LTG - EL 485 (ADM)	120V Power	
P-256	1"	2 - #8 AWG W 1#10 GND	RGS	LP-UPS-EMER-1-ADM	EM/EXIT LTG - EL. 457 RM 2100/2102 (TB)	120V Power	
P-257	1"	2 - #8 AWG W 1#10 GND	RGS/PVC COATED RGS/PVC SCH 80	LP-UPS-EMER-1-ADM	EM/EXIT LTG - EL. 471 RM EAST(TB)	120V Power	PVC COATED RGS OR PVC SCHEDULE 80 WHERE APPLICABLE
P-258	1"	2 - #8 AWG W 1#10 GND	RGS	LP-UPS-EMER-1-ADM	EM/EXIT LTG - EL. 485 RM 2300(TB)	120V Power	
P-259	1"	2 - #8 AWG W 1#10 GND	RGS	LP-UPS-EMER-1-ADM	EXIT DOOR EXTERIOR ADM/TB LTG	120V Power	
P-260	1"	2 - #8 AWG W 1#10 GND	RGS	LP-UPS-EMER-1-ADM	TB ROOF LTG	120V Power	

CABLE AND CONDUIT SCHEDULE - WEST PARISH WTF							
CONDUIT NO.	SIZE	CABLE & SIZE	CONDUIT TYPE	FROM	TO	PURPOSE	REMARKS
P-261	1"	2 - #8 AWG W 1#10 GND	RGS	LP-UPS-EMER-1-ADM	TB ROOF LTG	120V Power	
P-262	1"	2 - #8 AWG W 1#10 GND	RGS	LP-UPS-EMER-1-ADM	EM/EXIT LTG - EL 471 (ADM)	120V Power	
P-263	1"	2 - #8 AWG W 1#10 GND	RGS	LP-UPS-EMER-1-ADM	EM/EXIT LTG - EL. 457 RM 2101 (TB)	120V Power	
P-264	1"	2 - #8 AWG W 1#10 GND	RGS	LP-UPS-EMER-1-ADM	EM/EXIT LTG - EL. 471 RM WEST, STAIR C, STAIR D (TB)	120V Power	
P-265	1"	2 - #8 AWG W 1#10 GND	RGS	LP-UPS-EMER-1-ADM	EM/EXIT LTG - EL. 485 RM 2301 NORTH (TB)	120V Power	
P-265.1	1"	2 - #8 AWG W 1#10 GND	RGS	LP-UPS-EMER-1-ADM	EM/EXIT LTG - EL. 485 RM 2302/2303(TB)	120V Power	
P-265.2	1"	2 - #8 AWG W 1#10 GND	RGS	LP-UPS-EMER-1-ADM	EM/EXIT LTG - EL. 471 RM EAST, STAIR B (TB)	120V Power	
P-265.3	1"	2 - #8 AWG W 1#10 GND	RGS	LP-UPS-EMER-1-ADM	EM/EXIT LTG - EL. 485 RM 2301 SOUTH (TB)	120V Power	
P-266	3/4"	2 - #12 AWG W 1#12 GND	RGS	LP-UPS-ADM	SCADA SERVER NO. 1	120V Power	
P-267	3/4"	2 - #12 AWG W 1#12 GND	RGS	LP-UPS-ADM	SCADA SERVER NO. 2	120V Power	

CABLE AND CONDUIT SCHEDULE - WEST PARISH WTF							
CONDUIT NO.	SIZE	CABLE & SIZE	CONDUIT TYPE	FROM	TO	PURPOSE	REMARKS
P-268	3/4"	2 - #12 AWG W 1#12 GND	RGS	LP-UPS-ADM	SCADA SERVER NO. 3	120V Power	
P-269	3/4"	2 - #12 AWG W 1#12 GND	RGS	LP-UPS-ADM	OPERATOR CONSOLE & MONITOR 1	120V Power	
P-270	3/4"	2 - #12 AWG W 1#12 GND	RGS	LP-UPS-ADM	OPERATOR CONSOLE & MONITOR 2	120V Power	
P-271	3/4"	2 - #12 AWG W 1#12 GND	RGS	LP-UPS-ADM	OPERATOR CONSOLE & MONITOR 3	120V Power	
P-272	3/4"	2 - #12 AWG W 1#12 GND	RGS	LP-UPS-ADM	OPERATOR SCREEN & MONITORS	120V Power	
P-273	3/4"	2 - #12 AWG W 1#12 GND	RGS	LP-UPS-ADM	PLC CABINET NO. 1 (TRAIN A)	120V Power	
P-274	3/4"	2 - #12 AWG W 1#12 GND	RGS	LP-UPS-ADM	PLC CABINET NO. 2 (TRAIN B)	120V Power	
P-275	3/4"	2 - #12 AWG W 1#12 GND	RGS	LP-UPS-ADM	PLC CABINET NO. 3 (BOP)	120V Power	
P-276	3/4"	2 - #12 AWG W 1#12 GND	RGS	LP-UPS-ADM	IT SERVER # 1	120V Power	
P-277	3/4"	2 - #12 AWG W 1#12 GND	RGS	LP-UPS-ADM	IT SERVER # 2	120V Power	
P-278	3/4"	2 - #12 AWG W 1#12 GND	RGS	LP-UPS-ADM	IT SERVER # 3	120V Power	
P-279	3/4"	2 - #12 AWG W 1#12 GND	RGS	LP-UPS-ADM	IT DATA DIODE	120V Power	
P-280	3/4"	2 - #12 AWG W 1#12 GND	RGS	LP-UPS-ADM	IT FIREWALL	120V Power	

CABLE AND CONDUIT SCHEDULE - WEST PARISH WTF							
CONDUIT NO.	SIZE	CABLE & SIZE	CONDUIT TYPE	FROM	TO	PURPOSE	REMARKS
P-281	3/4"	2 - #12 AWG W 1#12 GND	RGS	LP-UPS-ADM	SCADA DATA DIODE	120V Power	
P-282	3/4"	2 - #12 AWG W 1#12 GND	RGS	LP-UPS-ADM	NETWORK ROUTER	120V Power	
P-283	3/4"	2 - #12 AWG W 1#12 GND	RGS	LP-UPS-ADM	IT NAS2	120V Power	
P-284	3/4"	2 - #12 AWG W 1#12 GND	RGS	LP-UPS-ADM	SCADA NAS1	120V Power	
P-285	3/4"	2 - #12 AWG W 1#12 GND	RGS	LP-UPS-ADM	PROGRAMMIN G STATION & MONITOR	120V Power	
P-286	3/4"	2 - #12 AWG W 1#12 GND	RGS	LP-UPS-ADM	ETHERNET SWITCH NO. 1	120V Power	
P-287	3/4"	2 - #12 AWG W 1#12 GND	RGS	LP-UPS-ADM	ETHERNET SWITCH NO. 2	120V Power	
P-288	3/4"	2 - #12 AWG W 1#12 GND	RGS	LP-UPS-ADM	ETHERNET SWITCH NO. 3	120V Power	
P-289	3/4"	2 - #12 AWG W 1#12 GND	RGS	LP-UPS-ADM	ETHERNET SWITCH NO. 4	120V Power	
P-290	3/4"	2 - #12 AWG W 1#12 GND	RGS	LP-UPS-ADM	ETHERNET SWITCH NO. 5	120V Power	
P-290.1	3/4"	2 - #12 AWG W 1#12 GND	RGS	LP-UPS-ADM	ACP-ADM	120V Power	
-	-	-	-	-	-	-	-
-	-	-	-	-	-	-	-
TB C&C							
P-291-A	5"	3 - #600 KCMIL W 1#3/0 GND	RGS	SWGR-02 BUS "A"	MCC-1A	480V Power	

CABLE AND CONDUIT SCHEDULE - WEST PARISH WTF							
CONDUIT NO.	SIZE	CABLE & SIZE	CONDUIT TYPE	FROM	TO	PURPOSE	REMARKS
P-291-B	5"	3 - #600 KCMIL W 1#3/0 GND	RGS	SWGR-02 BUS "A"	MCC-1A	480V Power	
P-291-C	5"	3 - #600 KCMIL W 1#3/0 GND	RGS	SWGR-02 BUS "A"	MCC-1A	480V Power	
P-292-A	5"	3 - #600 KCMIL W 1#3/0 GND	RGS	SWGR-02 BUS "A"	MCC-2A	480V Power	
P-292-B	5"	3 - #600 KCMIL W 1#3/0 GND	RGS	SWGR-02 BUS "A"	MCC-2A	480V Power	
P-292-C	5"	3 - #600 KCMIL W 1#3/0 GND	RGS	SWGR-02 BUS "A"	MCC-2A	480V Power	
P-293-A	5"	3 - #600 KCMIL W 1#3/0 GND	RGS	SWGR-02 BUS "A"	MCC-3A	480V Power	
P-293-B	5"	3 - #600 KCMIL W 1#3/0 GND	RGS	SWGR-02 BUS "A"	MCC-3A	480V Power	
P-293-C	5"	3 - #600 KCMIL W 1#3/0 GND	RGS	SWGR-02 BUS "A"	MCC-3A	480V Power	
P-294-A	5"	3 - #600 KCMIL W 1#1/0 GND	RGS	SWGR-02 BUS "A"	SWBD-1A	480V Power	
P-294-B	5"	3 - #600 KCMIL W 1#1/0 GND	RGS	SWGR-02 BUS "A"	SWBD-1A	480V Power	

CABLE AND CONDUIT SCHEDULE - WEST PARISH WTF							
CONDUIT NO.	SIZE	CABLE & SIZE	CONDUIT TYPE	FROM	TO	PURPOSE	REMARKS
P-295-A	5"	3 - #600 KCMIL W 1#3/0 GND	RGS	SWGR-02 BUS "B"	MCC-1B	480V Power	
P-295-B	5"	3 - #600 KCMIL W 1#3/0 GND	RGS	SWGR-02 BUS "B"	MCC-1B	480V Power	
P-295-C	5"	3 - #600 KCMIL W 1#3/0 GND	RGS	SWGR-02 BUS "B"	MCC-1B	480V Power	
P-296-A	5"	3 - #600 KCMIL W 1#3/0 GND	RGS	SWGR-02 BUS "B"	MCC-2B	480V Power	
P-296-B	5"	3 - #600 KCMIL W 1#3/0 GND	RGS	SWGR-02 BUS "B"	MCC-2B	480V Power	
P-296-C	5"	3 - #600 KCMIL W 1#3/0 GND	RGS	SWGR-02 BUS "B"	MCC-2B	480V Power	
P-297-A	5"	3 - #600 KCMIL W 1#3/0 GND	RGS	SWGR-02 BUS "B"	MCC-3B	480V Power	
P-297-B	5"	3 - #600 KCMIL W 1#3/0 GND	RGS	SWGR-02 BUS "B"	MCC-3B	480V Power	
P-297-C	5"	3 - #600 KCMIL W 1#3/0 GND	RGS	SWGR-02 BUS "B"	MCC-3B	480V Power	
P-298-A	5"	3 - #600 KCMIL W 1#1/0 GND	RGS	SWGR-02 BUS "B"	SWBD-1B	480V Power	

CABLE AND CONDUIT SCHEDULE - WEST PARISH WTF							
CONDUIT NO.	SIZE	CABLE & SIZE	CONDUIT TYPE	FROM	TO	PURPOSE	REMARKS
P-298-B	5"	3 - #600 KCMIL W 1#1/0 GND	RGS	SWGR-02 BUS "B"	SWBD-1B	480V Power	
P-299-A	5"	SPARE	RGS	SWGR-02 BUS "A"	SPARE BREAKER	480V Power	
P-299-B	5"	SPARE	RGS	SWGR-02 BUS "A"	SPARE BREAKER	480V Power	
P-300-A	5"	SPARE	RGS	SWGR-02 BUS "A"	SPARE BREAKER	480V Power	
P-300-B	5"	SPARE	RGS	SWGR-02 BUS "A"	SPARE BREAKER	480V Power	
P-300-C	5"	SPARE	RGS	SWGR-02 BUS "A"	SPARE BREAKER	480V Power	
P-301-A	5"	SPARE	RGS	SWGR-02 BUS "B"	SPARE BREAKER	480V Power	
P-301-B	5"	SPARE	RGS	SWGR-02 BUS "B"	SPARE BREAKER	480V Power	
P-302-A	5"	SPARE	RGS	SWGR-02 BUS "B"	SPARE BREAKER	480V Power	
P-302-B	5"	SPARE	RGS	SWGR-02 BUS "B"	SPARE BREAKER	480V Power	
P-302-C	5"	SPARE	RGS	SWGR-02 BUS "B"	SPARE BREAKER	480V Power	
P-303	3/4"	3 - #10 AWG W 1#10 GND	RGS	MCC-1A	DSW-MONORAIL 1	480V Power	
P-304	3/4"	3 - #10 AWG W 1#10 GND	RGS	DSW-MONORAIL 1	MONORAIL 1	480V Power	
P-305	3/4"	3 - #12 AWG W 1#12 GND	RGS	MCC-1A	DSW-WH-05	480V Power	
P-306	3/4"	3 - #12 AWG W 1#12 GND	RGS	DSW-WH-05	WH-05	480V Power	

CABLE AND CONDUIT SCHEDULE - WEST PARISH WTF							
CONDUIT NO.	SIZE	CABLE & SIZE	CONDUIT TYPE	FROM	TO	PURPOSE	REMARKS
P-307	1"	3 - #8 AWG W 1#10 GND	RGS	MCC-1A	DSW-DHC-01	480V Power	
P-308	1"	3 - #8 AWG W 1#10 GND	RGS	DSW-DHC-01	DHC-01	480V Power	
P-309	3/4"	3 - #12 AWG W 1#12 GND	PVC COATED RGS	MCC-1A	DSW-P-56060	480V Power	
P-310	3/4"	3 - #12 AWG W 1#12 GND	PVC COATED RGS	DSW-P-56060	P-56060	480V Power	
P-311	3"	3 - #500 KCMIL W 1#3 GND	RGS	MCC-1A	VFD-33030	480V Power	
P-312	3"	3 - #500 KCMIL W 1#3 GND	RGS	VFD-33030	P-33030	480V Power	
P-313	3"	3 - #500 KCMIL W 1#3 GND	RGS	MCC-1A	VFD-33010	480V Power	
P-314	3"	3 - #500 KCMIL W 1#3 GND	RGS	VFD-33010	P-33010	480V Power	
P-315	3/4"	3 - #12 AWG W 1#12 GND	PVC SCHEDULE 80	MCC-1A	DSW-P-52080	480V Power	
P-316	3/4"	3 - #12 AWG W 1#12 GND	PVC SCHEDULE 80	DSW-P-52080	P-52080	480V Power	
P-317	3/4"	3 - #12 AWG W 1#12 GND	PVC SCHEDULE 80	MCC-1A	DSW-P-54060	480V Power	

CABLE AND CONDUIT SCHEDULE - WEST PARISH WTF							
CONDUIT NO.	SIZE	CABLE & SIZE	CONDUIT TYPE	FROM	TO	PURPOSE	REMARKS
P-318	3/4"	3 - #12 AWG W 1#12 GND	PVC SCHEDULE 80	DSW-P-54060	P-54060	480V Power	
P-319	3/4"	3 - #12 AWG W 1#12 GND	PVC SCHEDULE 80	MCC-1A	DSW-P-53060	480V Power	
P-320	3/4"	3 - #12 AWG W 1#12 GND	PVC SCHEDULE 80	DSW-P-53060	P-53060	480V Power	
P-321	3/4"	3 - #12 AWG W 1#12 GND	PVC SCHEDULE 80	MCC-1A	DSW-P-52060	480V Power	
P-322	3/4"	3 - #12 AWG W 1#12 GND	PVC SCHEDULE 80	DSW-P-52060	P-52060	480V Power	
P-323	3/4"	3 - #12 AWG W 1#12 GND	PVC COATED RGS	MCC-1A	DSW-P-51060	480V Power	
P-324	3/4"	3 - #12 AWG W 1#12 GND	PVC COATED RGS	DSW-P-51060	P-51060	480V Power	
P-325	1"	3 - #6 AWG W 1#10 GND	RGS	MCC-1A	DSW-AC-01	480V Power	
P-326	1"	3 - #6 AWG W 1#10 GND	RGS	DSW-AC-01	AC-01	480V Power	
P-327	3/4"	3 - #12 AWG W 1#12 GND	RGS	MCC-1A	DSW-P-35020	480V Power	
P-328	3/4"	3 - #12 AWG W 1#12 GND	RGS	DSW-P-35020	P-35020	480V Power	
P-329	3/4"	3 - #12 AWG W 1#12 GND	RGS	MCC-1A	DSW-P-35060	480V Power	

CABLE AND CONDUIT SCHEDULE - WEST PARISH WTF							
CONDUIT NO.	SIZE	CABLE & SIZE	CONDUIT TYPE	FROM	TO	PURPOSE	REMARKS
P-330	3/4"	3 - #12 AWG W 1#12 GND	RGS	DSW-P-35060	P-35060	480V Power	
P-331	3/4"	3 - #12 AWG W 1#12 GND	PVC COATED RGS	MCC-1B	DSW-P-51070	480V Power	
P-332	3/4"	3 - #12 AWG W 1#12 GND	PVC COATED RGS	DSW-P-51070	P-51070	480V Power	
P-333	3/4"	3 - #12 AWG W 1#12 GND	PVC SCHEDULE 80	MCC-1B	DSW-P-52070	480V Power	
P-334	3/4"	3 - #12 AWG W 1#12 GND	PVC SCHEDULE 80	DSW-P-52070	P-52070	480V Power	
P-335	3/4"	3 - #12 AWG W 1#12 GND	PVC SCHEDULE 80	MCC-1B	DSW-P-53070	480V Power	
P-336	3/4"	3 - #12 AWG W 1#12 GND	PVC SCHEDULE 80	DSW-P-53070	P-53070	480V Power	
P-337	3/4"	3 - #12 AWG W 1#12 GND	PVC SCHEDULE 80	MCC-1B	DSW-P-54070	480V Power	
P-338	3/4"	3 - #12 AWG W 1#12 GND	PVC SCHEDULE 80	DSW-P-54070	P-54070	480V Power	
P-339	3/4"	3 - #12 AWG W 1#12 GND	PVC SCHEDULE 80	MCC-1B	DSW-P-52090	480V Power	
P-340	3/4"	3 - #12 AWG W 1#12 GND	PVC SCHEDULE 80	DSW-P-52090	P-52090	480V Power	

CABLE AND CONDUIT SCHEDULE - WEST PARISH WTF							
CONDUIT NO.	SIZE	CABLE & SIZE	CONDUIT TYPE	FROM	TO	PURPOSE	REMARKS
P-341	3"	3 - #500 KCMIL W 1#3 GND	RGS	MCC-1B	VFD-33020	480V Power	
P-342	3"	3 - #500 KCMIL W 1#3 GND	RGS	VFD-33020	P-33020	480V Power	
P-343	3"	3 - #500 KCMIL W 1#3 GND	RGS	MCC-1B	VFD-33040	480V Power	
P-344	3"	3 - #500 KCMIL W 1#3 GND	RGS	VFD-33040	P-33040	480V Power	
P-345	3/4"	3 - #12 AWG W 1#12 GND	RGS	MCC-1B	DSW-P-35030	480V Power	
P-346	3/4"	3 - #12 AWG W 1#12 GND	RGS	DSW-P-35030	P-35030	480V Power	
P-347	3/4"	3 - #12 AWG W 1#12 GND	RGS	MCC-1B	DSW-P-35070	480V Power	
P-348	3/4"	3 - #12 AWG W 1#12 GND	RGS	DSW-P-35070	P-35070	480V Power	
P-349	3/4"	3 - #12 AWG W 1#12 GND	PVC COATED RGS	MCC-1B	DSW-P-56070	480V Power	
P-350	3/4"	3 - #12 AWG W 1#12 GND	PVC COATED RGS	DSW-P-56070	P-56070	480V Power	
P-351	3/4"	3 - #12 AWG W 1#12 GND	RGS	MCC-1B	DSW-P-35030	480V Power	
P-352	3/4"	3 - #12 AWG W 1#12 GND	RGS	DSW-P-35030	P-35030	480V Power	
P-353	3/4"	3 - #12 AWG W 1#12 GND	RGS	MCC-1B	DSW-P-35070	480V Power	

CABLE AND CONDUIT SCHEDULE - WEST PARISH WTF							
CONDUIT NO.	SIZE	CABLE & SIZE	CONDUIT TYPE	FROM	TO	PURPOSE	REMARKS
P-354	3/4"	3 - #12 AWG W 1#12 GND	RGS	DSW-P-35070	P-35070	480V Power	
P-355	1"	3 - #6 AWG W 1#10 GND	RGS	MCC-1B	DSW-BCU-01	480V Power	
P-356	1"	3 - #6 AWG W 1#10 GND	RGS	DSW-BCU-01	BCU-01	480V Power	
P-357	1"	3 - #6 AWG W 1#10 GND	RGS	MCC-1B	DSW-AC-02	480V Power	
P-358	1"	3 - #6 AWG W 1#10 GND	RGS	DSW-AC-02	AC-02	480V Power	
P-359	3/4"	3 - #12 AWG W 1#12 GND	RGS	MCC-2A	DSW-MONORAIL 2	480V Power	
P-360	3/4"	3 - #12 AWG W 1#12 GND	RGS	DSW-MONORAIL 2	MONORAIL 2	480V Power	
P-361	3/4"	3 - #12 AWG W 1#12 GND	RGS	MCC-2A/VFD-20120	DSW-FLOC-20120	480V Power	
P-362	3/4"	3 - #12 AWG W 1#12 GND	RGS	DSW-FLOC-20120	FLOC-20120	480V Power	
P-363	3/4"	3 - #12 AWG W 1#12 GND	RGS	MCC-2A/VFD-20130	DSW-FLOC-20130	480V Power	
P-364	3/4"	3 - #12 AWG W 1#12 GND	RGS	DSW-FLOC-20130	FLOC-20130	480V Power	
P-365	3/4"	3 - #12 AWG W 1#12 GND	RGS	MCC-2A/VFD-20220	DSW-FLOC-20220	480V Power	
P-366	3/4"	3 - #12 AWG W 1#12 GND	RGS	DSW-FLOC-20220	FLOC-20220	480V Power	
P-367	3/4"	3 - #12 AWG W 1#12 GND	RGS	MCC-2A/VFD-20230	DSW-FLOC-20230	480V Power	
P-368	3/4"	3 - #12 AWG W 1#12 GND	RGS	DSW-FLOC-20230	FLOC-20230	480V Power	
P-369	3/4"	3 - #12 AWG W 1#12 GND	RGS	MCC-2A/VFD-20320	DSW-FLOC-20320	480V Power	

CABLE AND CONDUIT SCHEDULE - WEST PARISH WTF							
CONDUIT NO.	SIZE	CABLE & SIZE	CONDUIT TYPE	FROM	TO	PURPOSE	REMARKS
P-370	3/4"	3 - #12 AWG W 1#12 GND	RGS	DSW-FLOC-20320	FLOC-20320	480V Power	
P-371	3/4"	3 - #12 AWG W 1#12 GND	RGS	MCC-2A/VFD-20330	DSW-FLOC-20330	480V Power	
P-372	3/4"	3 - #12 AWG W 1#12 GND	RGS	DSW-FLOC-20330	FLOC-20330	480V Power	
P-373	3/4"	3 - #12 AWG W 1#12 GND	RGS	MCC-2A/VFD-20420	DSW-FLOC-20420	480V Power	
P-374	3/4"	3 - #12 AWG W 1#12 GND	RGS	DSW-FLOC-20420	FLOC-20420	480V Power	
P-375	3/4"	3 - #12 AWG W 1#12 GND	RGS	MCC-2A/VFD-20430	DSW-FLOC-20430	480V Power	
P-376	3/4"	3 - #12 AWG W 1#12 GND	RGS	DSW-FLOC-20430	FLOC-20430	480V Power	
P-377	3/4"	3 - #12 AWG W 1#12 GND	RGS	MCC-2A/VFD-20520	DSW-FLOC-20520	480V Power	
P-378	3/4"	3 - #12 AWG W 1#12 GND	RGS	DSW-FLOC-20520	FLOC-20520	480V Power	
P-379	3/4"	3 - #12 AWG W 1#12 GND	RGS	MCC-2A/VFD-20530	DSW-FLOC-20530	480V Power	
P-380	3/4"	3 - #12 AWG W 1#12 GND	RGS	DSW-FLOC-20530	FLOC-20530	480V Power	
P-381	2"	3 - #250 KCMIL W 1#4 GND	RGS	MCC-2A	BL-45010	480V Power	
P-382	3/4"	3 - #12 AWG W 1#12 GND	RGS	MCC-2A/VFD-30160	DSW-SKMR-30160	480V Power	
P-383	3/4"	3 - #12 AWG W 1#12 GND	RGS	DSW-SKMR-30160	SKMR-30160	480V Power	
P-384	3/4"	3 - #12 AWG W 1#12 GND	RGS	MCC-2A/VFD-30260	DSW-SKMR-30260	480V Power	

CABLE AND CONDUIT SCHEDULE - WEST PARISH WTF							
CONDUIT NO.	SIZE	CABLE & SIZE	CONDUIT TYPE	FROM	TO	PURPOSE	REMARKS
P-385	3/4"	3 - #12 AWG W 1#12 GND	RGS	DSW-SKMR-30260	SKMR-30260	480V Power	
P-386	3/4"	3 - #12 AWG W 1#12 GND	RGS	MCC-2A/VFD-30360	DSW-SKMR-30360	480V Power	
P-387	3/4"	3 - #12 AWG W 1#12 GND	RGS	DSW-SKMR-30360	SKMR-30360	480V Power	
P-388	3/4"	3 - #12 AWG W 1#12 GND	RGS	MCC-2A/VFD-30460	DSW-SKMR-30460	480V Power	
P-389	3/4"	3 - #12 AWG W 1#12 GND	RGS	DSW-SKMR-30460	SKMR-30460	480V Power	
P-390	3/4"	3 - #12 AWG W 1#12 GND	RGS	MCC-2A/VFD-30560	DSW-SKMR-30560	480V Power	
P-391	3/4"	3 - #12 AWG W 1#12 GND	RGS	DSW-SKMR-30560	SKMR-30560	480V Power	
P-392	2"	3 - #3/0 AWG W 1#6 GND	RGS	MCC-2A	LCP-34010/COMP-34010	480V Power	
P-393	3/4"	3 - #12 AWG W 1#12 GND	RGS	MCC-2B/VFD-20620	DSW-FLOC-20620	480V Power	
P-394	3/4"	3 - #12 AWG W 1#12 GND	RGS	DSW-FLOC-20620	FLOC-20620	480V Power	
P-395	3/4"	3 - #12 AWG W 1#12 GND	RGS	MCC-2B/VFD-20630	DSW-FLOC-20630	480V Power	
P-396	3/4"	3 - #12 AWG W 1#12 GND	RGS	DSW-FLOC-20630	FLOC-20630	480V Power	
P-397	3/4"	3 - #12 AWG W 1#12 GND	RGS	MCC-2B/VFD-20720	DSW-FLOC-20720	480V Power	
P-398	3/4"	3 - #12 AWG W 1#12 GND	RGS	DSW-FLOC-20720	FLOC-20720	480V Power	
P-399	3/4"	3 - #12 AWG W 1#12 GND	RGS	MCC-2B/VFD-20730	DSW-FLOC-20730	480V Power	

CABLE AND CONDUIT SCHEDULE - WEST PARISH WTF							
CONDUIT NO.	SIZE	CABLE & SIZE	CONDUIT TYPE	FROM	TO	PURPOSE	REMARKS
P-400	3/4"	3 - #12 AWG W 1#12 GND	RGS	DSW-FLOC-20730	FLOC-20730	480V Power	
P-401	3/4"	3 - #12 AWG W 1#12 GND	RGS	MCC-2B/VFD-20820	DSW-FLOC-20820	480V Power	
P-402	3/4"	3 - #12 AWG W 1#12 GND	RGS	DSW-FLOC-20820	FLOC-20820	480V Power	
P-403	3/4"	3 - #12 AWG W 1#12 GND	RGS	MCC-2B/VFD-20830	DSW-FLOC-20830	480V Power	
P-404	3/4"	3 - #12 AWG W 1#12 GND	RGS	DSW-FLOC-20830	FLOC-20830	480V Power	
P-405	3/4"	3 - #12 AWG W 1#12 GND	RGS	MCC-2B/VFD-20920	DSW-FLOC-20920	480V Power	
P-406	3/4"	3 - #12 AWG W 1#12 GND	RGS	DSW-FLOC-20920	FLOC-20920	480V Power	
P-407	3/4"	3 - #12 AWG W 1#12 GND	RGS	MCC-2B/VFD-20930	DSW-FLOC-20930	480V Power	
P-408	3/4"	3 - #12 AWG W 1#12 GND	RGS	DSW-FLOC-20930	FLOC-20930	480V Power	
P-409	3/4"	3 - #12 AWG W 1#12 GND	RGS	MCC-2B/VFD-21020	DSW-FLOC-21020	480V Power	
P-410	3/4"	3 - #12 AWG W 1#12 GND	RGS	DSW-FLOC-21020	FLOC-21020	480V Power	
P-411	3/4"	3 - #12 AWG W 1#12 GND	RGS	MCC-2B/VFD-21030	DSW-FLOC-21030	480V Power	
P-412	3/4"	3 - #12 AWG W 1#12 GND	RGS	DSW-FLOC-21030	FLOC-21030	480V Power	
P-413	2"	3 - #250 KCMIL W 1#4 GND	RGS	MCC-2B	BL-45030	480V Power	
P-414	3/4"	3 - #12 AWG W 1#12 GND	RGS	MCC-2B/VFD-30660	DSW-SKMR-30660	480V Power	

CABLE AND CONDUIT SCHEDULE - WEST PARISH WTF							
CONDUIT NO.	SIZE	CABLE & SIZE	CONDUIT TYPE	FROM	TO	PURPOSE	REMARKS
P-415	3/4"	3 - #12 AWG W 1#12 GND	RGS	DSW-SKMR-30660	SKMR-30660	480V Power	
P-416	3/4"	3 - #12 AWG W 1#12 GND	RGS	MCC-2B/VFD-30760	DSW-SKMR-30760	480V Power	
P-417	3/4"	3 - #12 AWG W 1#12 GND	RGS	DSW-SKMR-30760	SKMR-30760	480V Power	
P-418	3/4"	3 - #12 AWG W 1#12 GND	RGS	MCC-2B/VFD-30860	DSW-SKMR-30860	480V Power	
P-419	3/4"	3 - #12 AWG W 1#12 GND	RGS	DSW-SKMR-30860	SKMR-30860	480V Power	
P-420	3/4"	3 - #12 AWG W 1#12 GND	RGS	MCC-2B/VFD-30960	DSW-SKMR-30960	480V Power	
P-421	3/4"	3 - #12 AWG W 1#12 GND	RGS	DSW-SKMR-30960	SKMR-30960	480V Power	
P-422	3/4"	3 - #12 AWG W 1#12 GND	RGS	MCC-2B/VFD-31060	DSW-SKMR-31060	480V Power	
P-423	3/4"	3 - #12 AWG W 1#12 GND	RGS	DSW-SKMR-31060	SKMR-31060	480V Power	
P-424	2"	3 - #3/0 AWG W 1#6 GND	RGS	MCC-2B	LCP-34020/COMP-34020	480V Power	
P-425-A	3"	3 - #250 KCMIL W 1#2 GND	RGS	MCC-2B	HV-03	480V Power	
P-425-B	3"	3 - #250 KCMIL W 1#2 GND	RGS	MCC-2B	HV-03	480V Power	
P-426	3/4"	3 - #12 AWG W 1#12 GND	RGS	MCC-2B	DSW-MONORAIL 3	480V Power	
P-427	3/4"	3 - #12 AWG W 1#12 GND	RGS	DSW-MONORAIL 3	MONORAIL 3	480V Power	

CABLE AND CONDUIT SCHEDULE - WEST PARISH WTF							
CONDUIT NO.	SIZE	CABLE & SIZE	CONDUIT TYPE	FROM	TO	PURPOSE	REMARKS
P-428	3"	3 - #350 KCMIL W 1#4 GND	RGS	MCC-3A	HV-01	480V Power	
P-429	3/4"	3 - #12 AWG W 1#12 GND	RGS	MCC-3A	DSW-ACCU-01	480V Power	
P-430	3/4"	3 - #12 AWG W 1#12 GND	RGS	DSW-ACCU-01	ACCU-01	480V Power	
P-431	3/4"	3 - #12 AWG W 1#12 GND	RGS	MCC-3A	DSW-ACCU-03	480V Power	
P-432	3/4"	3 - #12 AWG W 1#12 GND	RGS	DSW-ACCU-03	ACCU-03	480V Power	
P-433	4"	3 - #600 KCMIL W 1#3 GND	RGS	MCC-3A	DHU-01	480V Power	
P-434	3/4"	3 - #6 AWG W 1#10 GND	RGS	MCC-3A	DSW-AC-03	480V Power	
P-435	3/4"	3 - #6 AWG W 1#10 GND	RGS	DSW-AC-03	AC-03	480V Power	
P-436	1"	3 - #3 AWG W 1#8 GND	RGS	MCC-3A	DSW-WH-10	480V Power	
P-437	1"	3 - #3 AWG W 1#8 GND	RGS	DSW-WH-10	WH-10	480V Power	
P-438	3"	3 - #350 KCMIL W 1#4 GND	RGS	MCC-3B	HV-02	480V Power	
P-439	3/4"	3 - #12 AWG W 1#12 GND	RGS	MCC-3B	DSW-ACCU-02	480V Power	
P-440	3/4"	3 - #12 AWG W 1#12 GND	RGS	DSW-ACCU-02	ACCU-02	480V Power	
P-441	3/4"	3 - #12 AWG W 1#12 GND	RGS	MCC-3B	DSW-ACCU-04	480V Power	

CABLE AND CONDUIT SCHEDULE - WEST PARISH WTF							
CONDUIT NO.	SIZE	CABLE & SIZE	CONDUIT TYPE	FROM	TO	PURPOSE	REMARKS
P-442	3/4"	3 - #12 AWG W 1#12 GND	RGS	DSW-ACCU-04	ACCU-04	480V Power	
P-443	3/4"	3 - #6 AWG W 1#10 GND	RGS	MCC-3B	DSW-AC-04	480V Power	
P-444	3/4"	3 - #6 AWG W 1#10 GND	RGS	DSW-AC-04	AC-04	480V Power	
P-445	1 1/2"	3 - #2 AWG W 1#8 GND	RGS	SWBD-1A	PP-1A-TB	480V Power	
P-446	1 1/2"	3 - #2 AWG W 1#8 GND	RGS	SWBD-1A	PP-1B-TB	480V Power	
P-447	1 1/2"	3 - #2 AWG W 1#8 GND	RGS	SWBD-1A	PP-1C-TB	480V Power	
P-448	1 1/2"	3 - #2 AWG W 1#8 GND	RGS	SWBD-1A	PP-1D-TB	480V Power	
P-449	1 1/2"	3 - #2 AWG W 1#8 GND	RGS	SWBD-1B	PP-1E-TB	480V Power	
P-450	1 1/2"	3 - #2 AWG W 1#8 GND	RGS	SWBD-1B	PP-1F-TB	480V Power	
P-451	1 1/2"	3 - #2 AWG W 1#8 GND	RGS	SWBD-1B	PP-1G-TB	480V Power	
P-452	1 1/2"	3 - #2 AWG W 1#8 GND	RGS	SWBD-1B	PP-1H-TB	480V Power	
P-453	1 1/2"	3 - #2 AWG W 1#8 GND	RGS	SWBD-1A	PP-1-TB	480V Power	
P-454	1 1/2"	3 - #2 AWG W 1#8 GND	RGS	SWBD-1A	PP-2-TB	480V Power	
P-455	1 1/2"	3 - #2 AWG W 1#8 GND	RGS	SWBD-1B	PP-3-TB	480V Power	
P-456	1 1/2"	3 - #3 AWG W 1#8 GND	RGS	SWBD-1A	PP-2A-TB	480V Power	
P-457	1 1/2"	3 - #3 AWG W 1#8 GND	RGS	SWBD-1A	PP-2B-TB	480V Power	

CABLE AND CONDUIT SCHEDULE - WEST PARISH WTF							
CONDUIT NO.	SIZE	CABLE & SIZE	CONDUIT TYPE	FROM	TO	PURPOSE	REMARKS
P-458	1 1/2"	3 - #3 AWG W 1#8 GND	RGS	SWBD-1A	PP-2C-TB	480V Power	
P-459	1 1/2"	3 - #3 AWG W 1#8 GND	RGS	SWBD-1A	PP-2D-TB	480V Power	
P-460	1 1/2"	3 - #2 AWG W 1#8 GND	RGS	SWBD-1B	PP-2E-TB	480V Power	
P-461	1 1/2"	3 - #2 AWG W 1#8 GND	RGS	SWBD-1B	PP-2F-TB	480V Power	
P-462	1 1/2"	3 - #2 AWG W 1#8 GND	RGS	SWBD-1B	PP-2G-TB	480V Power	
P-463	1 1/2"	3 - #2 AWG W 1#8 GND	RGS	SWBD-1B	PP-2H-TB	480V Power	
P-464	1 1/2"	3 - #2 AWG W 1#8 GND	RGS	SWBD-1B	PP-2I-TB	480V Power	
P-465	1 1/2"	3 - #2 AWG W 1#8 GND	RGS	SWBD-1A	PP-2J-TB	480V Power	
P-466	1 1/2"	3 - #2 AWG W 1#8 GND	RGS	SWBD-1A	PP-2K-TB	480V Power	
P-467	1 1/2"	3 - #2 AWG W 1#8 GND	RGS	SWBD-1A	PP-2L-TB	480V Power	
P-468	1 1/2"	3 - #2 AWG W 1#8 GND	RGS	SWBD-1A	PP-2M-TB	480V Power	
P-469	1 1/2"	3 - #2 AWG W 1#8 GND	RGS	SWBD-1B	PP-2N-TB	480V Power	
P-470	3/4"	3 - #8 AWG W 1#10 GND	RGS	SWBD-1A	TX-UPS-1-MOV-TB	480V Power	
P-471	1 1/2"	3 - #2 AWG W 1#8 GND	RGS	TX-UPS-1-MOV-TB	UPS-1-MOV-TB	240V Power	
P-472	1 1/2"	3 - #2 AWG W 1#8 GND	RGS	UPS-1-MOV-TB	LP-1-UPS-MOV-TB	240V Power	
P-473	3/4"	3 - #8 AWG W 1#10 GND	RGS	SWBD-1B	TX-UPS-2-MOV-TB	480V Power	

CABLE AND CONDUIT SCHEDULE - WEST PARISH WTF							
CONDUIT NO.	SIZE	CABLE & SIZE	CONDUIT TYPE	FROM	TO	PURPOSE	REMARKS
P-474	1 1/2"	3 - #2 AWG W 1#8 GND	RGS	TX-UPS-2-MOV-TB	UPS-2-MOV-TB	240V Power	
P-475	1 1/2"	3 - #2 AWG W 1#8 GND	RGS	UPS-2-MOV-TB	LP-2-UPS-MOV-TB	240V Power	
P-476	1 1/2"	3 - #1 AWG W 1#6 GND	RGS	SWBD-1B	DSW-TX-LP-457-TB	480V Power	
P-477	1 1/2"	3 - #1 AWG W 1#6 GND	RGS	DSW-TX-LP-457-TB	TX-LP-457-TB	480V Power	
P-478	2"	4 - #3/0 AWG W 1#6 GND	RGS	TX-LP-457-TB	LP-457-TB	208V Power	
P-479	2 1/2"	3 - #300 KCMIL W 1# 4GND	RGS	SWBD-1B	DSW-TX-LP-471-TB	480V Power	
P-480	2 1/2"	3 - #300 KCMIL W 1# 4GND	RGS	DSW-TX-LP-471-TB	TX-LP-471-TB	480V Power	
P-481	3"	4 - #600 KCMIL W 1# 3GND	RGS	TX-LP-471-TB	LP-471-TB	208V Power	
P-482	1 1/2"	3 - #1 AWG W 1#6 GND	RGS	SWBD-1B	DSW-TX-LP-485-TB	480V Power	
P-483	1 1/2"	3 - #1 AWG W 1#6 GND	RGS	DSW-TX-LP-485-TB	TX-LP-485-TB	480V Power	
P-484	2 1/2"	4 - #4/0 AWG W 1#6 GND	RGS	TX-LP-485-TB	LP-485-TB	208V Power	
P-485	3/4"	3 - #12 AWG W 1#12 GND	RGS	PANEL PP-1A-TB	DSW-FCV-10111	480V Power	
P-486	3/4"	3 - #12 AWG W 1#12 GND	RGS	DSW-FCV-10111	FCV-10111	480V Power	
P-487	3/4"	3 - #12 AWG W 1#12 GND	RGS	PANEL PP-1A-TB	DSW-MOV-40130	480V Power	

CABLE AND CONDUIT SCHEDULE - WEST PARISH WTF							
CONDUIT NO.	SIZE	CABLE & SIZE	CONDUIT TYPE	FROM	TO	PURPOSE	REMARKS
P-488	3/4"	3 - #12 AWG W 1#12 GND	RGS	DSW-MOV-40130	MOV-40130	480V Power	
P-489	3/4"	3 - #12 AWG W 1#12 GND	RGS	PANEL PP-1A-TB	DSW-MOV-40140	480V Power	
P-490	3/4"	3 - #12 AWG W 1#12 GND	RGS	DSW-MOV-40140	MOV-40140	480V Power	
P-491	3/4"	3 - #12 AWG W 1#12 GND	RGS	PANEL PP-1A-TB	DSW-MOV-40150	480V Power	
P-492	3/4"	3 - #12 AWG W 1#12 GND	RGS	DSW-MOV-40150	MOV-40150	480V Power	
P-493	3/4"	3 - #12 AWG W 1#12 GND	RGS	PANEL PP-1A-TB	DSW-MOV-40170	480V Power	
P-494	3/4"	3 - #12 AWG W 1#12 GND	RGS	DSW-MOV-40170	MOV-40170	480V Power	
P-495	3/4"	3 - #12 AWG W 1#12 GND	RGS	PANEL PP-1A-TB	DSW-MOV-40230	480V Power	
P-496	3/4"	3 - #12 AWG W 1#12 GND	RGS	DSW-MOV-40230	MOV-40230	480V Power	
P-497	3/4"	3 - #12 AWG W 1#12 GND	RGS	PANEL PP-1A-TB	DSW-MOV-40240	480V Power	
P-498	3/4"	3 - #12 AWG W 1#12 GND	RGS	DSW-MOV-40240	MOV-40240	480V Power	
P-499	3/4"	3 - #12 AWG W 1#12 GND	RGS	PANEL PP-1A-TB	DSW-MOV-40250	480V Power	
P-500	3/4"	3 - #12 AWG W 1#12 GND	RGS	DSW-MOV-40250	MOV-40250	480V Power	
P-501	3/4"	3 - #12 AWG W 1#12 GND	RGS	PANEL PP-1A-TB	DSW-FCV-46001	480V Power	
P-502	3/4"	3 - #12 AWG W 1#12 GND	RGS	DSW-FCV-46001	FCV-46001	480V Power	
P-503	3/4"	3 - #12 AWG W 1#12 GND	RGS	PANEL PP-1A-TB	DSW-FCV-46002	480V Power	

CABLE AND CONDUIT SCHEDULE - WEST PARISH WTF							
CONDUIT NO.	SIZE	CABLE & SIZE	CONDUIT TYPE	FROM	TO	PURPOSE	REMARKS
P-504	3/4"	3 - #12 AWG W 1#12 GND	RGS	DSW-FCV-46002	FCV-46002	480V Power	
P-505	3/4"	3 - #12 AWG W 1#12 GND	RGS	PANEL PP-1B-TB	DSW-MOV-40270	480V Power	
P-506	3/4"	3 - #12 AWG W 1#12 GND	RGS	DSW-MOV-40270	MOV-40270	480V Power	
P-507	3/4"	3 - #12 AWG W 1#12 GND	RGS	PANEL PP-1B-TB	DSW-MOV-40330	480V Power	
P-508	3/4"	3 - #12 AWG W 1#12 GND	RGS	DSW-MOV-40330	MOV-40330	480V Power	
P-509	3/4"	3 - #12 AWG W 1#12 GND	RGS	PANEL PP-1B-TB	DSW-MOV-40340	480V Power	
P-510	3/4"	3 - #12 AWG W 1#12 GND	RGS	DSW-MOV-40340	MOV-40340	480V Power	
P-511	3/4"	3 - #12 AWG W 1#12 GND	RGS	PANEL PP-1B-TB	DSW-MOV-40350	480V Power	
P-512	3/4"	3 - #12 AWG W 1#12 GND	RGS	DSW-MOV-40350	MOV-40350	480V Power	
P-513	3/4"	3 - #12 AWG W 1#12 GND	RGS	PANEL PP-1B-TB	DSW-MOV-40370	480V Power	
P-514	3/4"	3 - #12 AWG W 1#12 GND	RGS	DSW-MOV-40370	MOV-40370	480V Power	
P-515	3/4"	3 - #12 AWG W 1#12 GND	RGS	PANEL PP-1B-TB	DSW-MOV-40430	480V Power	
P-516	3/4"	3 - #12 AWG W 1#12 GND	RGS	DSW-MOV-40430	MOV-40430	480V Power	
P-517	3/4"	3 - #12 AWG W 1#12 GND	RGS	PANEL PP-1B-TB	DSW-MOV-40440	480V Power	
P-518	3/4"	3 - #12 AWG W 1#12 GND	RGS	DSW-MOV-40440	MOV-40440	480V Power	
P-519	3/4"	3 - #12 AWG W 1#12 GND	RGS	PANEL PP-1B-TB	DSW-MOV-40450	480V Power	

CABLE AND CONDUIT SCHEDULE - WEST PARISH WTF							
CONDUIT NO.	SIZE	CABLE & SIZE	CONDUIT TYPE	FROM	TO	PURPOSE	REMARKS
P-520	3/4"	3 - #12 AWG W 1#12 GND	RGS	DSW-MOV-40450	MOV-40450	480V Power	
P-521	3/4"	3 - #12 AWG W 1#12 GND	RGS	PANEL PP-1B-TB	DSW-FCV-60504	480V Power	
P-522	3/4"	3 - #12 AWG W 1#12 GND	RGS	DSW-FCV-60504	FCV-60504	480V Power	
P-523	3/4"	3 - #12 AWG W 1#12 GND	RGS	PANEL PP-1B-TB	DSW-FCV-60505	480V Power	
P-524	3/4"	3 - #12 AWG W 1#12 GND	RGS	DSW-FCV-60505	FCV-60505	480V Power	
P-525	3/4"	3 - #12 AWG W 1#12 GND	RGS	PANEL PP-1C-TB	DSW-MOV-40470	480V Power	
P-526	3/4"	3 - #12 AWG W 1#12 GND	RGS	DSW-MOV-40470	MOV-40470	480V Power	
P-527	3/4"	3 - #12 AWG W 1#12 GND	RGS	PANEL PP-1C-TB	DSW-MOV-40530	480V Power	
P-528	3/4"	3 - #12 AWG W 1#12 GND	RGS	DSW-MOV-40530	MOV-40530	480V Power	
P-529	3/4"	3 - #12 AWG W 1#12 GND	RGS	PANEL PP-1C-TB	DSW-MOV-40540	480V Power	
P-530	3/4"	3 - #12 AWG W 1#12 GND	RGS	DSW-MOV-40540	MOV-40540	480V Power	
P-531	3/4"	3 - #12 AWG W 1#12 GND	RGS	PANEL PP-1C-TB	DSW-MOV-40550	480V Power	
P-532	3/4"	3 - #12 AWG W 1#12 GND	RGS	DSW-MOV-40550	MOV-40550	480V Power	
P-533	3/4"	3 - #12 AWG W 1#12 GND	RGS	PANEL PP-1C-TB	DSW-MOV-40570	480V Power	
P-534	3/4"	3 - #12 AWG W 1#12 GND	RGS	DSW-MOV-40570	MOV-40570	480V Power	
P-535	3/4"	3 - #12 AWG W 1#12 GND	RGS	PANEL PP-1C-TB	DSW-MOV-30001	480V Power	

CABLE AND CONDUIT SCHEDULE - WEST PARISH WTF							
CONDUIT NO.	SIZE	CABLE & SIZE	CONDUIT TYPE	FROM	TO	PURPOSE	REMARKS
P-536	3/4"	3 - #12 AWG W 1#12 GND	RGS	DSW-MOV-30001	MOV-30001	480V Power	
P-537	3/4"	3 - #12 AWG W 1#12 GND	RGS	PANEL PP-1C-TB	DSW-MOV-30002	480V Power	
P-538	3/4"	3 - #12 AWG W 1#12 GND	RGS	DSW-MOV-30002	MOV-30002	480V Power	
P-539	3/4"	3 - #12 AWG W 1#12 GND	RGS	PANEL PP-1C-TB	DSW-MOV-30003	480V Power	
P-540	3/4"	3 - #12 AWG W 1#12 GND	RGS	DSW-MOV-30003	MOV-30003	480V Power	
P-541	3/4"	3 - #12 AWG W 1#12 GND	RGS	PANEL PP-1C-TB	DSW-FCV-40100	480V Power	
P-542	3/4"	3 - #12 AWG W 1#12 GND	RGS	DSW-FCV-40100	FCV-40100	480V Power	
P-543	3/4"	3 - #12 AWG W 1#12 GND	RGS	PANEL PP-1D-TB	DSW-MOV-40630	480V Power	
P-544	3/4"	3 - #12 AWG W 1#12 GND	RGS	DSW-MOV-40630	MOV-40630	480V Power	
P-545	3/4"	3 - #12 AWG W 1#12 GND	RGS	PANEL PP-1D-TB	DSW-MOV-40640	480V Power	
P-546	3/4"	3 - #12 AWG W 1#12 GND	RGS	DSW-MOV-40640	MOV-40640	480V Power	
P-547	3/4"	3 - #12 AWG W 1#12 GND	RGS	PANEL PP-1D-TB	DSW-MOV-40650	480V Power	
P-548	3/4"	3 - #12 AWG W 1#12 GND	RGS	DSW-MOV-40650	MOV-40650	480V Power	
P-549	3/4"	3 - #12 AWG W 1#12 GND	RGS	PANEL PP-1D-TB	DSW-MOV-40670	480V Power	
P-550	3/4"	3 - #12 AWG W 1#12 GND	RGS	DSW-MOV-40670	MOV-40670	480V Power	
P-551	3/4"	3 - #12 AWG W 1#12 GND	RGS	PANEL PP-1D-TB	DSW-MOV-40730	480V Power	

CABLE AND CONDUIT SCHEDULE - WEST PARISH WTF							
CONDUIT NO.	SIZE	CABLE & SIZE	CONDUIT TYPE	FROM	TO	PURPOSE	REMARKS
P-552	3/4"	3 - #12 AWG W 1#12 GND	RGS	DSW-MOV-40730	MOV-40730	480V Power	
P-553	3/4"	3 - #12 AWG W 1#12 GND	RGS	PANEL PP-1D-TB	DSW-MOV-40740	480V Power	
P-554	3/4"	3 - #12 AWG W 1#12 GND	RGS	DSW-MOV-40740	MOV-40740	480V Power	
P-555	3/4"	3 - #12 AWG W 1#12 GND	RGS	PANEL PP-1D-TB	DSW-MOV-40750	480V Power	
P-556	3/4"	3 - #12 AWG W 1#12 GND	RGS	DSW-MOV-40750	MOV-40750	480V Power	
P-557	3/4"	3 - #12 AWG W 1#12 GND	RGS	PANEL PP-1D-TB	DSW-MOV-40770	480V Power	
P-558	3/4"	3 - #12 AWG W 1#12 GND	RGS	DSW-MOV-40770	MOV-40770	480V Power	
P-559	3/4"	3 - #12 AWG W 1#12 GND	RGS	PANEL PP-1E-TB	DSW-FCV-10121	480V Power	
P-560	3/4"	3 - #12 AWG W 1#12 GND	RGS	DSW-FCV-10121	FCV-10121	480V Power	
P-561	3/4"	3 - #12 AWG W 1#12 GND	RGS	PANEL PP-1E-TB	DSW-MOV-40830	480V Power	
P-562	3/4"	3 - #12 AWG W 1#12 GND	RGS	DSW-MOV-40830	MOV-40830	480V Power	
P-563	3/4"	3 - #12 AWG W 1#12 GND	RGS	PANEL PP-1E-TB	DSW-MOV-40840	480V Power	
P-564	3/4"	3 - #12 AWG W 1#12 GND	RGS	DSW-MOV-40840	MOV-40840	480V Power	
P-565	3/4"	3 - #12 AWG W 1#12 GND	RGS	PANEL PP-1E-TB	DSW-MOV-40850	480V Power	
P-566	3/4"	3 - #12 AWG W 1#12 GND	RGS	DSW-MOV-40850	MOV-40850	480V Power	
P-567	3/4"	3 - #12 AWG W 1#12 GND	RGS	PANEL PP-1E-TB	DSW-MOV-40870	480V Power	

CABLE AND CONDUIT SCHEDULE - WEST PARISH WTF							
CONDUIT NO.	SIZE	CABLE & SIZE	CONDUIT TYPE	FROM	TO	PURPOSE	REMARKS
P-568	3/4"	3 - #12 AWG W 1#12 GND	RGS	DSW-MOV-40870	MOV-40870	480V Power	
P-569	3/4"	3 - #12 AWG W 1#12 GND	RGS	PANEL PP-1E-TB	DSW-MOV-40930	480V Power	
P-570	3/4"	3 - #12 AWG W 1#12 GND	RGS	DSW-MOV-40930	MOV-40930	480V Power	
P-571	3/4"	3 - #12 AWG W 1#12 GND	RGS	PANEL PP-1E-TB	DSW-MOV-40940	480V Power	
P-572	3/4"	3 - #12 AWG W 1#12 GND	RGS	DSW-MOV-40940	MOV-40940	480V Power	
P-573	3/4"	3 - #12 AWG W 1#12 GND	RGS	PANEL PP-1E-TB	DSW-MOV-40950	480V Power	
P-574	3/4"	3 - #12 AWG W 1#12 GND	RGS	DSW-MOV-40950	MOV-40950	480V Power	
P-575	3/4"	3 - #12 AWG W 1#12 GND	RGS	PANEL PP-1F-TB	DSW-MOV-40970	480V Power	
P-576	3/4"	3 - #12 AWG W 1#12 GND	RGS	DSW-MOV-40970	MOV-40970	480V Power	
P-577	3/4"	3 - #12 AWG W 1#12 GND	RGS	PANEL PP-1F-TB	DSW-MOV-41030	480V Power	
P-578	3/4"	3 - #12 AWG W 1#12 GND	RGS	DSW-MOV-41030	MOV-41030	480V Power	
P-579	3/4"	3 - #12 AWG W 1#12 GND	RGS	PANEL PP-1F-TB	DSW-MOV-41040	480V Power	
P-580	3/4"	3 - #12 AWG W 1#12 GND	RGS	DSW-MOV-41040	MOV-41040	480V Power	
P-581	3/4"	3 - #12 AWG W 1#12 GND	RGS	PANEL PP-1F-TB	DSW-MOV-41050	480V Power	
P-582	3/4"	3 - #12 AWG W 1#12 GND	RGS	DSW-MOV-41050	MOV-41050	480V Power	
P-583	3/4"	3 - #12 AWG W 1#12 GND	RGS	PANEL PP-1F-TB	DSW-MOV-41070	480V Power	

CABLE AND CONDUIT SCHEDULE - WEST PARISH WTF							
CONDUIT NO.	SIZE	CABLE & SIZE	CONDUIT TYPE	FROM	TO	PURPOSE	REMARKS
P-584	3/4"	3 - #12 AWG W 1#12 GND	RGS	DSW-MOV-41070	MOV-41070	480V Power	
P-585	3/4"	3 - #12 AWG W 1#12 GND	RGS	PANEL PP-1F-TB	DSW-MOV-41130	480V Power	
P-586	3/4"	3 - #12 AWG W 1#12 GND	RGS	DSW-MOV-41130	MOV-41130	480V Power	
P-587	3/4"	3 - #12 AWG W 1#12 GND	RGS	PANEL PP-1F-TB	DSW-MOV-41140	480V Power	
P-588	3/4"	3 - #12 AWG W 1#12 GND	RGS	DSW-MOV-41140	MOV-41140	480V Power	
P-589	3/4"	3 - #12 AWG W 1#12 GND	RGS	PANEL PP-1F-TB	DSW-MOV-41150	480V Power	
P-590	3/4"	3 - #12 AWG W 1#12 GND	RGS	DSW-MOV-41150	MOV-41150	480V Power	
P-591	3/4"	3 - #12 AWG W 1#12 GND	RGS	PANEL PP-1F-TB	DSW-MOV-41170	480V Power	
P-592	3/4"	3 - #12 AWG W 1#12 GND	RGS	DSW-MOV-41170	MOV-41170	480V Power	
P-593	3/4"	3 - #12 AWG W 1#12 GND	RGS	PANEL PP-1G-TB	DSW-MOV-41230	480V Power	
P-594	3/4"	3 - #12 AWG W 1#12 GND	RGS	DSW-MOV-41230	MOV-41230	480V Power	
P-595	3/4"	3 - #12 AWG W 1#12 GND	RGS	PANEL PP-1G-TB	DSW-MOV-41240	480V Power	
P-596	3/4"	3 - #12 AWG W 1#12 GND	RGS	DSW-MOV-41240	MOV-41240	480V Power	
P-597	3/4"	3 - #12 AWG W 1#12 GND	RGS	PANEL PP-1G-TB	DSW-MOV-41250	480V Power	
P-598	3/4"	3 - #12 AWG W 1#12 GND	RGS	DSW-MOV-41250	MOV-41250	480V Power	
P-599	3/4"	3 - #12 AWG W 1#12 GND	RGS	PANEL PP-1G-TB	DSW-MOV-41270	480V Power	

CABLE AND CONDUIT SCHEDULE - WEST PARISH WTF							
CONDUIT NO.	SIZE	CABLE & SIZE	CONDUIT TYPE	FROM	TO	PURPOSE	REMARKS
P-600	3/4"	3 - #12 AWG W 1#12 GND	RGS	DSW-MOV-41270	MOV-41270	480V Power	
P-601	3/4"	3 - #12 AWG W 1#12 GND	RGS	PANEL PP-1G-TB	DSW-MOV-41330	480V Power	
P-602	3/4"	3 - #12 AWG W 1#12 GND	RGS	DSW-MOV-41330	MOV-41330	480V Power	
P-603	3/4"	3 - #12 AWG W 1#12 GND	RGS	PANEL PP-1G-TB	DSW-MOV-41340	480V Power	
P-604	3/4"	3 - #12 AWG W 1#12 GND	RGS	DSW-MOV-41340	MOV-41340	480V Power	
P-605	3/4"	3 - #12 AWG W 1#12 GND	RGS	PANEL PP-1G-TB	DSW-MOV-41350	480V Power	
P-606	3/4"	3 - #12 AWG W 1#12 GND	RGS	DSW-MOV-41350	MOV-41350	480V Power	
P-607	3/4"	3 - #12 AWG W 1#12 GND	RGS	PANEL PP-1G-TB	DSW-MOV-41370	480V Power	
P-608	3/4"	3 - #12 AWG W 1#12 GND	RGS	DSW-MOV-41370	MOV-41370	480V Power	
P-609	3/4"	3 - #12 AWG W 1#12 GND	RGS	PANEL PP-1H-TB	DSW-MOV-41430	480V Power	
P-610	3/4"	3 - #12 AWG W 1#12 GND	RGS	DSW-MOV-41430	MOV-41430	480V Power	
P-611	3/4"	3 - #12 AWG W 1#12 GND	RGS	PANEL PP-1H-TB	DSW-MOV-41440	480V Power	
P-612	3/4"	3 - #12 AWG W 1#12 GND	RGS	DSW-MOV-41440	MOV-41440	480V Power	
P-613	3/4"	3 - #12 AWG W 1#12 GND	RGS	PANEL PP-1H-TB	DSW-MOV-41450	480V Power	
P-614	3/4"	3 - #12 AWG W 1#12 GND	RGS	DSW-MOV-41450	MOV-41450	480V Power	
P-615	3/4"	3 - #12 AWG W 1#12 GND	RGS	PANEL PP-1H-TB	DSW-MOV-41470	480V Power	

CABLE AND CONDUIT SCHEDULE - WEST PARISH WTF							
CONDUIT NO.	SIZE	CABLE & SIZE	CONDUIT TYPE	FROM	TO	PURPOSE	REMARKS
P-616	3/4"	3 - #12 AWG W 1#12 GND	RGS	DSW-MOV-41470	MOV-41470	480V Power	
P-617	3/4"	3 - #12 AWG W 1#12 GND	RGS	PANEL PP-1H-TB	DSW-MOG-42050	480V Power	
P-618	3/4"	3 - #12 AWG W 1#12 GND	RGS	DSW-MOG-42050	MOG-42050	480V Power	
P-619	3/4"	3 - #12 AWG W 1#12 GND	RGS	PANEL PP-1H-TB	DSW-MOG-42060	480V Power	
P-620	3/4"	3 - #12 AWG W 1#12 GND	RGS	DSW-MOG-42060	MOG-42060	480V Power	
P-621	3/4"	3 - #12 AWG W 1#12 GND	RGS	PANEL PP-1H-TB	DSW-EUH-52	480V Power	
P-622	3/4"	3 - #12 AWG W 1#12 GND	RGS	DSW-EUH-52	EUH-52	480V Power	
P-623	3/4"	3 - #12 AWG W 1#12 GND	RGS	PANEL PP-1-TB	DSW-EUH-26 (LOWER CENTRAL GALLERY-1)	480V Power	
P-624	3/4"	3 - #12 AWG W 1#12 GND	RGS	DSW-EUH-26 (LOWER CENTRAL GALLERY-1)	EUH-26 (LOWER CENTRAL GALLERY-1)	480V Power	
P-625	3/4"	3 - #12 AWG W 1#12 GND	RGS	PANEL PP-1-TB	DSW-EUH-27 (LOWER CENTRAL GALLERY-2)	480V Power	
P-626	3/4"	3 - #12 AWG W 1#12 GND	RGS	DSW-EUH-27 (LOWER CENTRAL GALLERY-2)	EUH-27 (LOWER CENTRAL GALLERY-2)	480V Power	

CABLE AND CONDUIT SCHEDULE - WEST PARISH WTF							
CONDUIT NO.	SIZE	CABLE & SIZE	CONDUIT TYPE	FROM	TO	PURPOSE	REMARKS
P-627	3/4"	3 - #12 AWG W 1#12 GND	RGS	PANEL PP-1-TB	DSW-EUH-45 (CHEMICAL CORRIDOR)	480V Power	
P-628	3/4"	3 - #12 AWG W 1#12 GND	RGS	DSW-EUH-45 (CHEMICAL CORRIDOR)	EUH-45 (CHEMICAL CORRIDOR)	480V Power	
P-629	3/4"	3 - #12 AWG W 1#12 GND	RGS	PANEL PP-1-TB	DSW-EUH-49 (STAIRS NORTH)	480V Power	
P-630	3/4"	3 - #12 AWG W 1#12 GND	RGS	DSW-EUH-49 (STAIRS NORTH)	EUH-49 (STAIRS NORTH)	480V Power	
P-631	3/4"	3 - #12 AWG W 1#12 GND	RGS	PANEL PP-1-TB	DSW-EUH-28 (LOWER CENTRAL GALLERY-3)	480V Power	
P-632	3/4"	3 - #12 AWG W 1#12 GND	RGS	DSW-EUH-28 (LOWER CENTRAL GALLERY-3)	EUH-28 (LOWER CENTRAL GALLERY-3)	480V Power	
P-633	3/4"	3 - #12 AWG W 1#12 GND	PVC SCHEDULE 80	PANEL PP-1-TB	DSW-EUH-36 (CAUSTIC RM)	480V Power	
P-634	3/4"	3 - #12 AWG W 1#12 GND	PVC SCHEDULE 80	DSW-EUH-36 (CAUSTIC RM)	EUH-36 (CAUSTIC RM)	480V Power	
P-635	3/4"	3 - #12 AWG W 1#12 GND	PVC SCHEDULE 80	PANEL PP-1-TB	DSW-EUH-37 (HYPO RM-1)	480V Power	
P-636	3/4"	3 - #12 AWG W 1#12 GND	PVC SCHEDULE 80	DSW-EUH-37 (HYPO RM-1)	EUH-37 (HYPO RM-1)	480V Power	

CABLE AND CONDUIT SCHEDULE - WEST PARISH WTF							
CONDUIT NO.	SIZE	CABLE & SIZE	CONDUIT TYPE	FROM	TO	PURPOSE	REMARKS
P-637	3/4"	3 - #12 AWG W 1#12 GND	PVC SCHEDULE 80	PANEL PP-1-TB	DSW-EUH-38 (HYPO RM-2)	480V Power	
P-638	3/4"	3 - #12 AWG W 1#12 GND	PVC SCHEDULE 80	DSW-EUH-38 (HYPO RM-2)	EUH-38 (HYPO RM-2)	480V Power	
P-639	3/4"	3 - #12 AWG W 1#12 GND	RGS	PANEL PP-1-TB	ROLL-UP DOOR (WTP CHEMICAL CORRIDOR - EAST SIDE)	480V Power	
P-640	3/4"	3 - #12 AWG W 1#12 GND	RGS	PANEL PP-1-TB	ROLL-UP DOOR (WTP WTP GALLERY - NORTH SIDE)	480V Power	
P-641	3/4"	3 - #12 AWG W 1#12 GND	PVC SCHEDULE 80	PANEL PP-2-TB	DSW-EUH-39 (PHOS ACID RM)	480V Power	
P-642	3/4"	3 - #12 AWG W 1#12 GND	PVC SCHEDULE 80	DSW-EUH-39 (PHOS ACID RM)	EUH-39 (PHOS ACID RM)	480V Power	
P-643	3/4"	3 - #12 AWG W 1#12 GND	PVC COATED RGS	PANEL PP-2-TB	DSW-EUH-40 (PACI RM-1)	480V Power	
P-644	3/4"	3 - #12 AWG W 1#12 GND	PVC COATED RGS	DSW-EUH-40 (PACI RM-1)	EUH-40 (PACI RM-1)	480V Power	
P-645	3/4"	3 - #12 AWG W 1#12 GND	PVC COATED RGS	PANEL PP-2-TB	DSW-EUH-41 (PACI RM-2)	480V Power	

CABLE AND CONDUIT SCHEDULE - WEST PARISH WTF							
CONDUIT NO.	SIZE	CABLE & SIZE	CONDUIT TYPE	FROM	TO	PURPOSE	REMARKS
P-646	3/4"	3 - #12 AWG W 1#12 GND	PVC COATED RGS	DSW-EUH-41 (PACI RM-2)	EUH-41 (PACI RM-2)	480V Power	
P-647	3/4"	3 - #12 AWG W 1#12 GND	PVC COATED RGS	PANEL PP-2-TB	DSW-EUH-42 (FILTER AID POLY RM)	480V Power	
P-648	3/4"	3 - #12 AWG W 1#12 GND	PVC COATED RGS	DSW-EUH-42 (FILTER AID POLY RM)	EUH-42 (FILTER AID POLY RM)	480V Power	
P-649	3/4"	3 - #12 AWG W 1#12 GND	PVC COATED RGS	PANEL PP-2-TB	DSW-EUH-43 (CATIONIC POLY Rm)	480V Power	
P-650	3/4"	3 - #12 AWG W 1#12 GND	PVC COATED RGS	DSW-EUH-43 (CATIONIC POLY Rm)	EUH-43 (CATIONIC POLY Rm)	480V Power	
P-651	3/4"	3 - #12 AWG W 1#12 GND	PVC SCHEDULE 80	PANEL PP-2-TB	DSW-EUH-44 (FUTURE CHEM RM)	480V Power	
P-652	3/4"	3 - #12 AWG W 1#12 GND	PVC SCHEDULE 80	DSW-EUH-44 (FUTURE CHEM RM)	EUH-44 (FUTURE CHEM RM)	480V Power	
P-653	3/4"	3 - #12 AWG W 1#12 GND	RGS	PANEL PP-2-TB	DSW-EUH-51 (STAIR WEST)	480V Power	
P-654	3/4"	3 - #12 AWG W 1#12 GND	RGS	DSW-EUH-51 (STAIR WEST)	EUH-51 (STAIR WEST)	480V Power	
P-655	3/4"	3 - #12 AWG W 1#12 GND	RGS	PANEL PP-2-TB	DSW-EUH-25 (FILTER GALLERY-5)	480V Power	
P-656	3/4"	3 - #12 AWG W 1#12 GND	RGS	DSW-EUH-25 (FILTER GALLERY-5)	EUH-25 (FILTER GALLERY-5)	480V Power	

CABLE AND CONDUIT SCHEDULE - WEST PARISH WTF							
CONDUIT NO.	SIZE	CABLE & SIZE	CONDUIT TYPE	FROM	TO	PURPOSE	REMARKS
P-657	3/4"	3 - #12 AWG W 1#12 GND	RGS	PANEL PP-2-TB	ROLL-UP DOOR (WTP WORKSHOP - NORTH SIDE)	480V Power	
P-658	3/4"	3 - #12 AWG W 1#12 GND	RGS	PANEL PP-3-TB	DSW-EUH-21 (FILTER GALLERY-1)	480V Power	
P-659	3/4"	3 - #12 AWG W 1#12 GND	RGS	DSW-EUH-21 (FILTER GALLERY-1)	EUH-21 (FILTER GALLERY-1)	480V Power	
P-660	3/4"	3 - #12 AWG W 1#12 GND	RGS	PANEL PP-3-TB	DSW-EUH-22 (FILTER GALLERY-2)	480V Power	
P-661	3/4"	3 - #12 AWG W 1#12 GND	RGS	DSW-EUH-22 (FILTER GALLERY-2)	EUH-22 (FILTER GALLERY-2)	480V Power	
P-662	3/4"	3 - #12 AWG W 1#12 GND	RGS	PANEL PP-3-TB	DSW-EUH-23 (FILTER GALLERY-3)	480V Power	
P-663	3/4"	3 - #12 AWG W 1#12 GND	RGS	DSW-EUH-23 (FILTER GALLERY-3)	EUH-23 (FILTER GALLERY-3)	480V Power	
P-664	3/4"	3 - #12 AWG W 1#12 GND	RGS	PANEL PP-3-TB	DSW-EUH-24 (FILTER GALLERY-4)	480V Power	
P-665	3/4"	3 - #12 AWG W 1#12 GND	RGS	DSW-EUH-24 (FILTER GALLERY-4)	EUH-24 (FILTER GALLERY-4)	480V Power	
P-666	3/4"	3 - #12 AWG W 1#12 GND	RGS	PANEL PP-3-TB	DSW-EUH-29 (LOWER CENTRAL GALLERY-4)	480V Power	

CABLE AND CONDUIT SCHEDULE - WEST PARISH WTF							
CONDUIT NO.	SIZE	CABLE & SIZE	CONDUIT TYPE	FROM	TO	PURPOSE	REMARKS
P-667	3/4"	3 - #12 AWG W 1#12 GND	RGS	DSW-EUH-29 (LOWER CENTRAL GALLERY-4)	EUH-29 (LOWER CENTRAL GALLERY-4)	480V Power	
P-668	3/4"	3 - #12 AWG W 1#12 GND	RGS	PANEL PP-3-TB	DSW-EUH-30 (LOWER CENTRAL GALLERY-5)	480V Power	
P-669	3/4"	3 - #12 AWG W 1#12 GND	RGS	DSW-EUH-30 (LOWER CENTRAL GALLERY-5)	EUH-30 (LOWER CENTRAL GALLERY-5)	480V Power	
P-670	3/4"	3 - #12 AWG W 1#12 GND	RGS	PANEL PP-3-TB	DSW-EUH-46 (SPRINKLER RISER ROOM)	480V Power	
P-671	3/4"	3 - #12 AWG W 1#12 GND	RGS	DSW-EUH-46 (SPRINKLER RISER ROOM)	EUH-46 (SPRINKLER RISER ROOM)	480V Power	
P-672	3/4"	3 - #12 AWG W 1#12 GND	RGS	PANEL PP-3-TB	DSW-EUH-47 (STAIRS EAST)	480V Power	
P-673	3/4"	3 - #12 AWG W 1#12 GND	RGS	DSW-EUH-47 (STAIRS EAST)	EUH-47 (STAIRS EAST)	480V Power	
P-674	3/4"	3 - #12 AWG W 1#12 GND	RGS	PANEL PP-3-TB	DSW-EUH-48 (FILTERED WATER ROOM)	480V Power	
P-675	3/4"	3 - #12 AWG W 1#12 GND	RGS	DSW-EUH-48 (FILTERED WATER ROOM)	EUH-48 (FILTERED WATER ROOM)	480V Power	
P-676	3/4"	3 - #12 AWG W 1#12 GND	RGS	PANEL PP-2A-TB	DSW-MOV-30110	480V Power	
P-677	3/4"	3 - #12 AWG W 1#12 GND	RGS	DSW-MOV-30110	MOV-30110	480V Power	

CABLE AND CONDUIT SCHEDULE - WEST PARISH WTF							
CONDUIT NO.	SIZE	CABLE & SIZE	CONDUIT TYPE	FROM	TO	PURPOSE	REMARKS
P-678	3/4"	3 - #12 AWG W 1#12 GND	RGS	PANEL PP-2A-TB	DSW-MOV-30120	480V Power	
P-679	3/4"	3 - #12 AWG W 1#12 GND	RGS	DSW-MOV-30120	MOV-30120	480V Power	
P-680	3/4"	3 - #12 AWG W 1#12 GND	RGS	PANEL PP-2A-TB	DSW-MOV-30130	480V Power	
P-681	3/4"	3 - #12 AWG W 1#12 GND	RGS	DSW-MOV-30130	MOV-30130	480V Power	
P-682	3/4"	3 - #12 AWG W 1#12 GND	RGS	PANEL PP-2A-TB	DSW-MOV-30140	480V Power	
P-683	3/4"	3 - #12 AWG W 1#12 GND	RGS	DSW-MOV-30140	MOV-30140	480V Power	
P-684	3/4"	3 - #12 AWG W 1#12 GND	RGS	PANEL PP-2A-TB	DSW-MOV-30150	480V Power	
P-685	3/4"	3 - #12 AWG W 1#12 GND	RGS	DSW-MOV-30150	MOV-30150	480V Power	
P-686	3/4"	3 - #12 AWG W 1#12 GND	RGS	PANEL PP-2A-TB	DSW-MOV-30210	480V Power	
P-687	3/4"	3 - #12 AWG W 1#12 GND	RGS	DSW-MOV-30210	MOV-30210	480V Power	
P-688	3/4"	3 - #12 AWG W 1#12 GND	RGS	PANEL PP-2A-TB	DSW-MOV-30220	480V Power	
P-689	3/4"	3 - #12 AWG W 1#12 GND	RGS	DSW-MOV-30220	MOV-30220	480V Power	
P-690	3/4"	3 - #12 AWG W 1#12 GND	RGS	PANEL PP-2A-TB	DSW-MOV-30230	480V Power	
P-691	3/4"	3 - #12 AWG W 1#12 GND	RGS	DSW-MOV-30230	MOV-30230	480V Power	
P-692	3/4"	3 - #12 AWG W 1#12 GND	RGS	PANEL PP-2A-TB	DSW-MOV-30240	480V Power	
P-693	3/4"	3 - #12 AWG W 1#12 GND	RGS	DSW-MOV-30240	MOV-30240	480V Power	

CABLE AND CONDUIT SCHEDULE - WEST PARISH WTF							
CONDUIT NO.	SIZE	CABLE & SIZE	CONDUIT TYPE	FROM	TO	PURPOSE	REMARKS
P-694	3/4"	3 - #12 AWG W 1#12 GND	RGS	PANEL PP-2A-TB	DSW-MOV-30250	480V Power	
P-695	3/4"	3 - #12 AWG W 1#12 GND	RGS	DSW-MOV-30250	MOV-30250	480V Power	
P-696	3/4"	3 - #12 AWG W 1#12 GND	RGS	PANEL PP-2B-TB	DSW-MOV-30310	480V Power	
P-697	3/4"	3 - #12 AWG W 1#12 GND	RGS	DSW-MOV-30310	MOV-30310	480V Power	
P-698	3/4"	3 - #12 AWG W 1#12 GND	RGS	PANEL PP-2B-TB	DSW-MOV-30320	480V Power	
P-699	3/4"	3 - #12 AWG W 1#12 GND	RGS	DSW-MOV-30320	MOV-30320	480V Power	
P-700	3/4"	3 - #12 AWG W 1#12 GND	RGS	PANEL PP-2B-TB	DSW-MOV-30330	480V Power	
P-701	3/4"	3 - #12 AWG W 1#12 GND	RGS	DSW-MOV-30330	MOV-30330	480V Power	
P-702	3/4"	3 - #12 AWG W 1#12 GND	RGS	PANEL PP-2B-TB	DSW-MOV-30340	480V Power	
P-703	3/4"	3 - #12 AWG W 1#12 GND	RGS	DSW-MOV-30340	MOV-30340	480V Power	
P-704	3/4"	3 - #12 AWG W 1#12 GND	RGS	PANEL PP-2B-TB	DSW-MOV-30350	480V Power	
P-705	3/4"	3 - #12 AWG W 1#12 GND	RGS	DSW-MOV-30350	MOV-30350	480V Power	
P-706	3/4"	3 - #12 AWG W 1#12 GND	RGS	PANEL PP-2B-TB	DSW-MOV-30410	480V Power	
P-707	3/4"	3 - #12 AWG W 1#12 GND	RGS	DSW-MOV-30410	MOV-30410	480V Power	
P-708	3/4"	3 - #12 AWG W 1#12 GND	RGS	PANEL PP-2B-TB	DSW-MOV-30420	480V Power	
P-709	3/4"	3 - #12 AWG W 1#12 GND	RGS	DSW-MOV-30420	MOV-30420	480V Power	

CABLE AND CONDUIT SCHEDULE - WEST PARISH WTF							
CONDUIT NO.	SIZE	CABLE & SIZE	CONDUIT TYPE	FROM	TO	PURPOSE	REMARKS
P-710	3/4"	3 - #12 AWG W 1#12 GND	RGS	PANEL PP-2B-TB	DSW-MOV-30430	480V Power	
P-711	3/4"	3 - #12 AWG W 1#12 GND	RGS	DSW-MOV-30430	MOV-30430	480V Power	
P-712	3/4"	3 - #12 AWG W 1#12 GND	RGS	PANEL PP-2B-TB	DSW-MOV-30440	480V Power	
P-713	3/4"	3 - #12 AWG W 1#12 GND	RGS	DSW-MOV-30440	MOV-30440	480V Power	
P-714	3/4"	3 - #12 AWG W 1#12 GND	RGS	PANEL PP-2B-TB	DSW-MOV-30450	480V Power	
P-715	3/4"	3 - #12 AWG W 1#12 GND	RGS	DSW-MOV-30450	MOV-30450	480V Power	
P-716	3/4"	3 - #12 AWG W 1#12 GND	RGS	PANEL PP-2C-TB	DSW-MOV-30510	480V Power	
P-717	3/4"	3 - #12 AWG W 1#12 GND	RGS	DSW-MOV-30510	MOV-30510	480V Power	
P-718	3/4"	3 - #12 AWG W 1#12 GND	RGS	PANEL PP-2C-TB	DSW-MOV-30520	480V Power	
P-719	3/4"	3 - #12 AWG W 1#12 GND	RGS	DSW-MOV-30520	MOV-30520	480V Power	
P-720	3/4"	3 - #12 AWG W 1#12 GND	RGS	PANEL PP-2C-TB	DSW-MOV-30530	480V Power	
P-721	3/4"	3 - #12 AWG W 1#12 GND	RGS	DSW-MOV-30530	MOV-30530	480V Power	
P-722	3/4"	3 - #12 AWG W 1#12 GND	RGS	PANEL PP-2C-TB	DSW-MOV-30540	480V Power	
P-723	3/4"	3 - #12 AWG W 1#12 GND	RGS	DSW-MOV-30540	MOV-30540	480V Power	
P-724	3/4"	3 - #12 AWG W 1#12 GND	RGS	PANEL PP-2C-TB	DSW-MOV-30550	480V Power	
P-725	3/4"	3 - #12 AWG W 1#12 GND	RGS	DSW-MOV-30550	MOV-30550	480V Power	

CABLE AND CONDUIT SCHEDULE - WEST PARISH WTF							
CONDUIT NO.	SIZE	CABLE & SIZE	CONDUIT TYPE	FROM	TO	PURPOSE	REMARKS
P-725.1	3/4"	3 - #12 AWG W 1#12 GND	RGS	PANEL PP-2C-TB	DSW-MOV-33054	480V Power	
P-725.2	3/4"	3 - #12 AWG W 1#12 GND	RGS	DSW-MOV-33054	MOV-33054	480V Power	
P-726	3/4"	3 - #12 AWG W 1#12 GND	RGS	PANEL PP-2D-TB	DSW-MOV-20110	480V Power	
P-727	3/4"	3 - #12 AWG W 1#12 GND	RGS	DSW-MOV-20110	MOV-20110	480V Power	
P-728	3/4"	3 - #12 AWG W 1#12 GND	RGS	PANEL PP-2D-TB	DSW-MOV-20210	480V Power	
P-729	3/4"	3 - #12 AWG W 1#12 GND	RGS	DSW-MOV-20210	MOV-20210	480V Power	
P-730	3/4"	3 - #12 AWG W 1#12 GND	RGS	PANEL PP-2D-TB	DSW-MOV-20310	480V Power	
P-731	3/4"	3 - #12 AWG W 1#12 GND	RGS	DSW-MOV-20310	MOV-20310	480V Power	
P-732	3/4"	3 - #12 AWG W 1#12 GND	RGS	PANEL PP-2D-TB	DSW-MOV-20410	480V Power	
P-733	3/4"	3 - #12 AWG W 1#12 GND	RGS	DSW-MOV-20410	MOV-20410	480V Power	
P-734	3/4"	3 - #12 AWG W 1#12 GND	RGS	PANEL PP-2D-TB	DSW-MOV-20510	480V Power	
P-735	3/4"	3 - #12 AWG W 1#12 GND	RGS	DSW-MOV-20510	MOV-20510	480V Power	
-	-	-	-	-	-	-	-
-	-	-	-	-	-	-	-
P-738	3/4"	3 - #12 AWG W 1#12 GND	RGS	PANEL PP-2E-TB	DSW-EUH-11 (DAF-1)	480V Power	
P-739	3/4"	3 - #12 AWG W 1#12 GND	RGS	DSW-EUH-11 (DAF-1)	EUH-11 (DAF-1)	480V Power	
P-740	3/4"	3 - #12 AWG W 1#12 GND	RGS	PANEL PP-2E-TB	DSW-EUH-12 (DAF-2)	480V Power	

CABLE AND CONDUIT SCHEDULE - WEST PARISH WTF							
CONDUIT NO.	SIZE	CABLE & SIZE	CONDUIT TYPE	FROM	TO	PURPOSE	REMARKS
P-741	3/4"	3 - #12 AWG W 1#12 GND	RGS	DSW-EUH-12 (DAF-2)	EUH-12 (DAF-2)	480V Power	
P-742	3/4"	3 - #12 AWG W 1#12 GND	RGS	PANEL PP-2E-TB	DSW-EUH-13 (DAF-3)	480V Power	
P-743	3/4"	3 - #12 AWG W 1#12 GND	RGS	DSW-EUH-13 (DAF-3)	EUH-13 (DAF-3)	480V Power	
P-744	3/4"	3 - #12 AWG W 1#12 GND	RGS	PANEL PP-2E-TB	DSW-EUH-14 (DAF-4)	480V Power	
P-745	3/4"	3 - #12 AWG W 1#12 GND	RGS	DSW-EUH-14 (DAF-4)	EUH-14 (DAF-4)	480V Power	
P-746	3/4"	3 - #12 AWG W 1#12 GND	RGS	PANEL PP-2E-TB	DSW-EUH-20 (DAF-10)	480V Power	
P-747	3/4"	3 - #12 AWG W 1#12 GND	RGS	DSW-EUH-20 (DAF-10)	EUH-20 (DAF-10)	480V Power	
P-748	3/4"	3 - #12 AWG W 1#12 GND	RGS	PANEL PP-2E-TB	DSW-EUH-31 (UPPER CENTRAL GALLERY-1)	480V Power	
P-749	3/4"	3 - #12 AWG W 1#12 GND	RGS	DSW-EUH-31 (UPPER CENTRAL GALLERY-1)	EUH-31 (UPPER CENTRAL GALLERY-1)	480V Power	
P-750	3/4"	3 - #12 AWG W 1#12 GND	RGS	PANEL PP-2E-TB	DSW-EUH-32 (UPPER CENTRAL GALLERY-2)	480V Power	
P-751	3/4"	3 - #12 AWG W 1#12 GND	RGS	DSW-EUH-32 (UPPER CENTRAL GALLERY-2)	EUH-32 (UPPER CENTRAL GALLERY-2)	480V Power	
P-752	3/4"	3 - #12 AWG W 1#12 GND	RGS	PANEL PP-2E-TB	DSW-EUH-33 (UPPER	480V Power	

CABLE AND CONDUIT SCHEDULE - WEST PARISH WTF							
CONDUIT NO.	SIZE	CABLE & SIZE	CONDUIT TYPE	FROM	TO	PURPOSE	REMARKS
					CENTRAL GALLERY-3)		
P-753	3/4"	3 - #12 AWG W 1#12 GND	RGS	DSW-EUH-33 (UPPER CENTRAL GALLERY-3)	EUH-33 (UPPER CENTRAL GALLERY-3)	480V Power	
P-754	3/4"	3 - #12 AWG W 1#12 GND	RGS	PANEL PP-2E-TB	DSW-EF-09 (DAF ROOM EF/RF)	480V Power	
P-754.1	3/4"	3 - #12 AWG W 1#12 GND	RGS	DSW-EF-09 (DAF ROOM EF/RF)	VFD-EF-09 (DAF ROOM EF/RF)	480V Power	
P-755	3/4"	3 - #12 AWG W 1#12 GND	RGS	VFD-EF-09 (DAF ROOM EF/RF)	EF-09 (DAF ROOM EF/RF)	480V Power	
P-756	3/4"	3 - #12 AWG W 1#12 GND	RGS	PANEL PP-2F-TB	DSW-MOV-30610	480V Power	
P-757	3/4"	3 - #12 AWG W 1#12 GND	RGS	DSW-MOV-30610	MOV-30610	480V Power	
P-758	3/4"	3 - #12 AWG W 1#12 GND	RGS	PANEL PP-2F-TB	DSW-MOV-30620	480V Power	
P-759	3/4"	3 - #12 AWG W 1#12 GND	RGS	DSW-MOV-30620	MOV-30620	480V Power	
P-760	3/4"	3 - #12 AWG W 1#12 GND	RGS	PANEL PP-2F-TB	DSW-MOV-30630	480V Power	
P-761	3/4"	3 - #12 AWG W 1#12 GND	RGS	DSW-MOV-30630	MOV-30630	480V Power	
P-762	3/4"	3 - #12 AWG W 1#12 GND	RGS	PANEL PP-2F-TB	DSW-MOV-30640	480V Power	
P-763	3/4"	3 - #12 AWG W 1#12 GND	RGS	DSW-MOV-30640	MOV-30640	480V Power	
P-764	3/4"	3 - #12 AWG W 1#12 GND	RGS	PANEL PP-2F-TB	DSW-MOV-30650	480V Power	

CABLE AND CONDUIT SCHEDULE - WEST PARISH WTF							
CONDUIT NO.	SIZE	CABLE & SIZE	CONDUIT TYPE	FROM	TO	PURPOSE	REMARKS
P-765	3/4"	3 - #12 AWG W 1#12 GND	RGS	DSW-MOV-30650	MOV-30650	480V Power	
P-766	3/4"	3 - #12 AWG W 1#12 GND	RGS	PANEL PP-2F-TB	DSW-MOV-30710	480V Power	
P-767	3/4"	3 - #12 AWG W 1#12 GND	RGS	DSW-MOV-30710	MOV-30710	480V Power	
P-768	3/4"	3 - #12 AWG W 1#12 GND	RGS	PANEL PP-2F-TB	DSW-MOV-30720	480V Power	
P-769	3/4"	3 - #12 AWG W 1#12 GND	RGS	DSW-MOV-30720	MOV-30720	480V Power	
P-770	3/4"	3 - #12 AWG W 1#12 GND	RGS	PANEL PP-2F-TB	DSW-MOV-30730	480V Power	
P-771	3/4"	3 - #12 AWG W 1#12 GND	RGS	DSW-MOV-30730	MOV-30730	480V Power	
P-772	3/4"	3 - #12 AWG W 1#12 GND	RGS	PANEL PP-2F-TB	DSW-MOV-30740	480V Power	
P-773	3/4"	3 - #12 AWG W 1#12 GND	RGS	DSW-MOV-30740	MOV-30740	480V Power	
P-774	3/4"	3 - #12 AWG W 1#12 GND	RGS	PANEL PP-2F-TB	DSW-MOV-30750	480V Power	
P-775	3/4"	3 - #12 AWG W 1#12 GND	RGS	DSW-MOV-30750	MOV-30750	480V Power	
P-776	3/4"	3 - #12 AWG W 1#12 GND	RGS	PANEL PP-2G-TB	DSW-MOV-30810	480V Power	
P-777	3/4"	3 - #12 AWG W 1#12 GND	RGS	DSW-MOV-30810	MOV-30810	480V Power	
P-778	3/4"	3 - #12 AWG W 1#12 GND	RGS	PANEL PP-2G-TB	DSW-MOV-30820	480V Power	
P-779	3/4"	3 - #12 AWG W 1#12 GND	RGS	DSW-MOV-30820	MOV-30820	480V Power	
P-780	3/4"	3 - #12 AWG W 1#12 GND	RGS	PANEL PP-2G-TB	DSW-MOV-30830	480V Power	

CABLE AND CONDUIT SCHEDULE - WEST PARISH WTF							
CONDUIT NO.	SIZE	CABLE & SIZE	CONDUIT TYPE	FROM	TO	PURPOSE	REMARKS
P-781	3/4"	3 - #12 AWG W 1#12 GND	RGS	DSW-MOV-30830	MOV-30830	480V Power	
P-782	3/4"	3 - #12 AWG W 1#12 GND	RGS	PANEL PP-2G-TB	DSW-MOV-30840	480V Power	
P-783	3/4"	3 - #12 AWG W 1#12 GND	RGS	DSW-MOV-30840	MOV-30840	480V Power	
P-784	3/4"	3 - #12 AWG W 1#12 GND	RGS	PANEL PP-2G-TB	DSW-MOV-30850	480V Power	
P-785	3/4"	3 - #12 AWG W 1#12 GND	RGS	DSW-MOV-30850	MOV-30850	480V Power	
P-786	3/4"	3 - #12 AWG W 1#12 GND	RGS	PANEL PP-2G-TB	DSW-MOV-30910	480V Power	
P-787	3/4"	3 - #12 AWG W 1#12 GND	RGS	DSW-MOV-30910	MOV-30910	480V Power	
P-788	3/4"	3 - #12 AWG W 1#12 GND	RGS	PANEL PP-2G-TB	DSW-MOV-30920	480V Power	
P-789	3/4"	3 - #12 AWG W 1#12 GND	RGS	DSW-MOV-30920	MOV-30920	480V Power	
P-790	3/4"	3 - #12 AWG W 1#12 GND	RGS	PANEL PP-2G-TB	DSW-MOV-30930	480V Power	
P-791	3/4"	3 - #12 AWG W 1#12 GND	RGS	DSW-MOV-30930	MOV-30930	480V Power	
P-792	3/4"	3 - #12 AWG W 1#12 GND	RGS	PANEL PP-2G-TB	DSW-MOV-30940	480V Power	
P-793	3/4"	3 - #12 AWG W 1#12 GND	RGS	DSW-MOV-30940	MOV-30940	480V Power	
P-794	3/4"	3 - #12 AWG W 1#12 GND	RGS	PANEL PP-2G-TB	DSW-MOV-30950	480V Power	
P-795	3/4"	3 - #12 AWG W 1#12 GND	RGS	DSW-MOV-30950	MOV-30950	480V Power	
P-796	3/4"	3 - #12 AWG W 1#12 GND	RGS	PANEL PP-2H-TB	DSW-LCV-34051	480V Power	

CABLE AND CONDUIT SCHEDULE - WEST PARISH WTF							
CONDUIT NO.	SIZE	CABLE & SIZE	CONDUIT TYPE	FROM	TO	PURPOSE	REMARKS
P-797	3/4"	3 - #12 AWG W 1#12 GND	RGS	DSW-LCV-34051	LCV-34051	480V Power	
P-798	3/4"	3 - #12 AWG W 1#12 GND	RGS	PANEL PP-2H-TB	DSW-MOV-31010	480V Power	
P-799	3/4"	3 - #12 AWG W 1#12 GND	RGS	DSW-MOV-31010	MOV-31010	480V Power	
P-800	3/4"	3 - #12 AWG W 1#12 GND	RGS	PANEL PP-2H-TB	DSW-MOV-31020	480V Power	
P-801	3/4"	3 - #12 AWG W 1#12 GND	RGS	DSW-MOV-31020	MOV-31020	480V Power	
P-802	3/4"	3 - #12 AWG W 1#12 GND	RGS	PANEL PP-2H-TB	DSW-MOV-31030	480V Power	
P-803	3/4"	3 - #12 AWG W 1#12 GND	RGS	DSW-MOV-31030	MOV-31030	480V Power	
P-804	3/4"	3 - #12 AWG W 1#12 GND	RGS	PANEL PP-2H-TB	DSW-MOV-31040	480V Power	
P-805	3/4"	3 - #12 AWG W 1#12 GND	RGS	DSW-MOV-31040	MOV-31040	480V Power	
P-806	3/4"	3 - #12 AWG W 1#12 GND	RGS	PANEL PP-2H-TB	DSW-MOV-31050	480V Power	
P-807	3/4"	3 - #12 AWG W 1#12 GND	RGS	DSW-MOV-31050	MOV-31050	480V Power	
P-808	3/4"	3 - #12 AWG W 1#12 GND	RGS	PANEL PP-2H-TB	DSW-LCV-34081	480V Power	
P-809	3/4"	3 - #12 AWG W 1#12 GND	RGS	DSW-LCV-34081	LCV-34081	480V Power	
P-810	3/4"	3 - #12 AWG W 1#12 GND	RGS	PANEL PP-2I-TB	DSW-MOV-20610	480V Power	
P-811	3/4"	3 - #12 AWG W 1#12 GND	RGS	DSW-MOV-20610	MOV-20610	480V Power	
P-812	3/4"	3 - #12 AWG W 1#12 GND	RGS	PANEL PP-2I-TB	DSW-MOV-20710	480V Power	

CABLE AND CONDUIT SCHEDULE - WEST PARISH WTF							
CONDUIT NO.	SIZE	CABLE & SIZE	CONDUIT TYPE	FROM	TO	PURPOSE	REMARKS
P-813	3/4"	3 - #12 AWG W 1#12 GND	RGS	DSW-MOV-20710	MOV-20710	480V Power	
P-814	3/4"	3 - #12 AWG W 1#12 GND	RGS	PANEL PP-2I-TB	DSW-MOV-20810	480V Power	
P-815	3/4"	3 - #12 AWG W 1#12 GND	RGS	DSW-MOV-20810	MOV-20810	480V Power	
P-816	3/4"	3 - #12 AWG W 1#12 GND	RGS	PANEL PP-2I-TB	DSW-MOV-20910	480V Power	
P-817	3/4"	3 - #12 AWG W 1#12 GND	RGS	DSW-MOV-20910	MOV-20910	480V Power	
P-818	3/4"	3 - #12 AWG W 1#12 GND	RGS	PANEL PP-2I-TB	DSW-MOV-21010	480V Power	
P-819	3/4"	3 - #12 AWG W 1#12 GND	RGS	DSW-MOV-21010	MOV-21010	480V Power	
P-820	3/4"	3 - #12 AWG W 1#12 GND	RGS	PANEL PP-2J-TB	DSW-EUH-15 (DAF-5)	480V Power	
P-821	3/4"	3 - #12 AWG W 1#12 GND	RGS	DSW-EUH-15 (DAF-5)	EUH-15 (DAF-5)	480V Power	
P-822	3/4"	3 - #12 AWG W 1#12 GND	RGS	PANEL PP-2J-TB	DSW-EUH-16 (DAF-6)	480V Power	
P-823	3/4"	3 - #12 AWG W 1#12 GND	RGS	DSW-EUH-16 (DAF-6)	EUH-16 (DAF-6)	480V Power	
P-824	3/4"	3 - #12 AWG W 1#12 GND	RGS	PANEL PP-2J-TB	DSW-EUH-17 (DAF-7)	480V Power	
P-825	3/4"	3 - #12 AWG W 1#12 GND	RGS	DSW-EUH-17 (DAF-7)	EUH-17 (DAF-7)	480V Power	
P-826	3/4"	3 - #12 AWG W 1#12 GND	RGS	PANEL PP-2J-TB	DSW-EUH-18 (DAF-8)	480V Power	
P-827	3/4"	3 - #12 AWG W 1#12 GND	RGS	DSW-EUH-18 (DAF-8)	EUH-18 (DAF-8)	480V Power	
P-828	3/4"	3 - #12 AWG W 1#12 GND	RGS	PANEL PP-2J-TB	DSW-EUH-19 (DAF-9)	480V Power	

CABLE AND CONDUIT SCHEDULE - WEST PARISH WTF							
CONDUIT NO.	SIZE	CABLE & SIZE	CONDUIT TYPE	FROM	TO	PURPOSE	REMARKS
P-829	3/4"	3 - #12 AWG W 1#12 GND	RGS	DSW-EUH-19 (DAF-9)	EUH-19 (DAF-9)	480V Power	
P-830	3/4"	3 - #12 AWG W 1#12 GND	RGS	PANEL PP-2J-TB	DSW-EUH-34 (UPPER CENTRAL GALLERY-4)	480V Power	
P-831	3/4"	3 - #12 AWG W 1#12 GND	RGS	DSW-EUH-34 (UPPER CENTRAL GALLERY-4)	EUH-34 (UPPER CENTRAL GALLERY-4)	480V Power	
P-832	3/4"	3 - #12 AWG W 1#12 GND	RGS	PANEL PP-2J-TB	DSW-EUH-35 (UPPER CENTRAL GALLERY-5)	480V Power	
P-833	3/4"	3 - #12 AWG W 1#12 GND	RGS	DSW-EUH-35 (UPPER CENTRAL GALLERY-5)	EUH-35 (UPPER CENTRAL GALLERY-5)	480V Power	
P-833.1	3/4"	3 - #12 AWG W 1#12 GND	RGS	PANEL PP-2J-TB	DSW-SF-01	480V Power	
P-833.2	3/4"	3 - #12 AWG W 1#12 GND	RGS	DSW-SF-01	SF-01	480V Power	
P-834	3/4"	3 - #12 AWG W 1#12 GND	RGS	PANEL PP-2K-TB	DSW-EUH-1 (FILTER-1)	480V Power	
P-835	3/4"	3 - #12 AWG W 1#12 GND	RGS	DSW-EUH-1 (FILTER-1)	EUH-1 (FILTER-1)	480V Power	
P-836	3/4"	3 - #12 AWG W 1#12 GND	RGS	PANEL PP-2K-TB	DSW-EUH-2 (FILTER-2)	480V Power	
P-837	3/4"	3 - #12 AWG W 1#12 GND	RGS	DSW-EUH-2 (FILTER-2)	EUH-2 (FILTER-2)	480V Power	
P-838	3/4"	3 - #12 AWG W 1#12 GND	RGS	PANEL PP-2K-TB	DSW-EUH-3 (FILTER-3)	480V Power	

CABLE AND CONDUIT SCHEDULE - WEST PARISH WTF							
CONDUIT NO.	SIZE	CABLE & SIZE	CONDUIT TYPE	FROM	TO	PURPOSE	REMARKS
P-839	3/4"	3 - #12 AWG W 1#12 GND	RGS	DSW-EUH-3 (FILTER-3)	EUH-3 (FILTER-3)	480V Power	
P-840	3/4"	3 - #12 AWG W 1#12 GND	RGS	PANEL PP-2K-TB	DSW-EUH-4 (FILTER-4)	480V Power	
P-841	3/4"	3 - #12 AWG W 1#12 GND	RGS	DSW-EUH-4 (FILTER-4)	EUH-4 (FILTER-4)	480V Power	
P-842	3/4"	3 - #12 AWG W 1#12 GND	RGS	PANEL PP-2K-TB	DSW-EUH-5 (FILTER-5)	480V Power	
P-843	3/4"	3 - #12 AWG W 1#12 GND	RGS	DSW-EUH-5 (FILTER-5)	EUH-5 (FILTER-5)	480V Power	
P-844	3/4"	3 - #12 AWG W 1#12 GND	RGS	PANEL PP-2K-TB	DSW-EUH-6 (FILTER-6)	480V Power	
P-845	3/4"	3 - #12 AWG W 1#12 GND	RGS	DSW-EUH-6 (FILTER-6)	EUH-6 (FILTER-6)	480V Power	
P-846	3/4"	3 - #12 AWG W 1#12 GND	RGS	PANEL PP-2K-TB	DSW-EUH-7 (FILTER-7)	480V Power	
P-847	3/4"	3 - #12 AWG W 1#12 GND	RGS	DSW-EUH-7 (FILTER-7)	EUH-7 (FILTER-7)	480V Power	
P-848	3/4"	3 - #12 AWG W 1#12 GND	RGS	PANEL PP-2K-TB	DSW-EUH-8 (FILTER-8)	480V Power	
P-849	3/4"	3 - #12 AWG W 1#12 GND	RGS	DSW-EUH-8 (FILTER-8)	EUH-8 (FILTER-8)	480V Power	
P-850	3/4"	3 - #12 AWG W 1#12 GND	RGS	PANEL PP-2K-TB	DSW-EUH-9 (FILTER-9)	480V Power	
P-851	3/4"	3 - #12 AWG W 1#12 GND	RGS	DSW-EUH-9 (FILTER-9)	EUH-9 (FILTER-9)	480V Power	
P-852	3/4"	3 - #12 AWG W 1#12 GND	RGS	PANEL PP-2K-TB	DSW-EUH-10 (FILTER-10)	480V Power	
P-853	3/4"	3 - #12 AWG W 1#12 GND	RGS	DSW-EUH-10 (FILTER-10)	EUH-10 (FILTER-10)	480V Power	

CABLE AND CONDUIT SCHEDULE - WEST PARISH WTF							
CONDUIT NO.	SIZE	CABLE & SIZE	CONDUIT TYPE	FROM	TO	PURPOSE	REMARKS
P-854	3/4"	3 - #12 AWG W 1#12 GND	PVC SCHEDULE 80	PANEL PP-2L-TB	DSW-EF-01 (Hypo Rm)	480V Power	
P-854.1	3/4"	3 - #12 AWG W 1#12 GND	PVC SCHEDULE 80	DSW-EF-01 (Hypo Rm)	VFD-EF-01 (Hypo Rm)	480V Power	
P-855	3/4"	3 - #12 AWG W 1#12 GND	PVC SCHEDULE 80	VFD-EF-01 (Hypo Rm)	EF-01 (Hypo Rm)	480V Power	
P-856	3/4"	3 - #12 AWG W 1#12 GND	PVC COATED RGS	PANEL PP-2L-TB	DSW-EF-02 (PACl Rm)	480V Power	
P-856.1	3/4"	3 - #12 AWG W 1#12 GND	PVC COATED RGS	DSW-EF-02 (PACl Rm)	VFD-EF-02 (PACl Rm)	480V Power	
P-857	3/4"	3 - #12 AWG W 1#12 GND	PVC COATED RGS	VFD-EF-02 (PACl Rm)	EF-02 (PACl Rm)	480V Power	
P-858	3/4"	3 - #12 AWG W 1#12 GND	PVC COATED RGS	PANEL PP-2L-TB	DSW-EF-03 (Filter Aid Poly Rm)	480V Power	
P-858.1	3/4"	3 - #12 AWG W 1#12 GND	PVC COATED RGS	DSW-EF-03 (Filter Aid Poly Rm)	VFD-EF-03 (Filter Aid Poly Rm)	480V Power	
P-859	3/4"	3 - #12 AWG W 1#12 GND	PVC COATED RGS	VFD-EF-03 (Filter Aid Poly Rm)	EF-03 (Filter Aid Poly Rm)	480V Power	
P-860	3/4"	3 - #12 AWG W 1#12 GND	PVC SCHEDULE 80	PANEL PP-2L-TB	DSW-EF-04 (Caustic Rm)	480V Power	

CABLE AND CONDUIT SCHEDULE - WEST PARISH WTF							
CONDUIT NO.	SIZE	CABLE & SIZE	CONDUIT TYPE	FROM	TO	PURPOSE	REMARKS
P-860.1	3/4"	3 - #12 AWG W 1#12 GND	PVC SCHEDULE 80	DSW-EF-04 (Caustic Rm)	VFD-EF-04 (Caustic Rm)	480V Power	
P-861	3/4"	3 - #12 AWG W 1#12 GND	PVC SCHEDULE 80	VFD-EF-04 (Caustic Rm)	EF-04 (Caustic Rm)	480V Power	
P-862	3/4"	3 - #12 AWG W 1#12 GND	PVC SCHEDULE 80	PANEL PP-2L-TB	DSW-EF-05 (Phos Acid Rm)	480V Power	
P-862.1	3/4"	3 - #12 AWG W 1#12 GND	PVC SCHEDULE 80	DSW-EF-05 (Phos Acid Rm)	VFD-EF-05 (Phos Acid Rm)	480V Power	
P-863	3/4"	3 - #12 AWG W 1#12 GND	PVC SCHEDULE 80	VFD-EF-05 (Phos Acid Rm)	EF-05 (Phos Acid Rm)	480V Power	
P-864	3/4"	3 - #12 AWG W 1#12 GND	PVC COATED RGS	PANEL PP-2L-TB	DSW-EF-06 (Coag Poly Rm)	480V Power	
P-864.1	3/4"	3 - #12 AWG W 1#12 GND	PVC COATED RGS	DSW-EF-06 (Coag Poly Rm)	VFD-EF-06 (Coag Poly Rm)	480V Power	
P-865	3/4"	3 - #12 AWG W 1#12 GND	PVC COATED RGS	VFD-EF-06 (Coag Poly Rm)	EF-06 (Coag Poly Rm)	480V Power	
P-866	3/4"	3 - #12 AWG W 1#12 GND	PVC SCHEDULE 80	PANEL PP-2L-TB	DSW-EF-07 (Future Rm)	480V Power	
P-866.1	3/4"	3 - #12 AWG W 1#12 GND	PVC SCHEDULE 80	DSW-EF-07 (Future Rm)	VFD-EF-07 (Future Rm)	480V Power	

CABLE AND CONDUIT SCHEDULE - WEST PARISH WTF							
CONDUIT NO.	SIZE	CABLE & SIZE	CONDUIT TYPE	FROM	TO	PURPOSE	REMARKS
P-867	3/4"	3 - #12 AWG W 1#12 GND	PVC SCHEDULE 80	VFD-EF-07 (Future Rm)	EF-07 (Future Rm)	480V Power	
P-868	3/4"	3 - #12 AWG W 1#12 GND	RGS	PANEL PP-2L-TB	DSW-EF-08 (Filter Room EF/RF)	480V Power	
P-868.1	3/4"	3 - #12 AWG W 1#12 GND	RGS	DSW-EF-08 (Filter Room EF/RF)	VFD-EF-08 (Filter Room EF/RF)	480V Power	
P-869	3/4"	3 - #12 AWG W 1#12 GND	RGS	VFD-EF-08 (Filter Room EF/RF)	EF-08 (Filter Room EF/RF)	480V Power	
P-870	3/4"	3 - #12 AWG W 1#12 GND	RGS	PANEL PP-2M-TB	DSW-MOV-40120	480V Power	
P-871	3/4"	3 - #12 AWG W 1#12 GND	RGS	DSW-MOV-40120	MOV-40120	480V Power	
P-872	3/4"	3 - #12 AWG W 1#12 GND	RGS	PANEL PP-2M-TB	DSW-MOV-40220	480V Power	
P-873	3/4"	3 - #12 AWG W 1#12 GND	RGS	DSW-MOV-40220	MOV-40220	480V Power	
P-874	3/4"	3 - #12 AWG W 1#12 GND	RGS	PANEL PP-2M-TB	DSW-MOV-40320	480V Power	
P-875	3/4"	3 - #12 AWG W 1#12 GND	RGS	DSW-MOV-40320	MOV-40320	480V Power	
P-876	3/4"	3 - #12 AWG W 1#12 GND	RGS	PANEL PP-2M-TB	DSW-MOV-40420	480V Power	
P-877	3/4"	3 - #12 AWG W 1#12 GND	RGS	DSW-MOV-40420	MOV-40420	480V Power	
P-878	3/4"	3 - #12 AWG W 1#12 GND	RGS	PANEL PP-2M-TB	DSW-MOV-40520	480V Power	
P-879	3/4"	3 - #12 AWG W 1#12 GND	RGS	DSW-MOV-40520	MOV-40520	480V Power	

CABLE AND CONDUIT SCHEDULE - WEST PARISH WTF							
CONDUIT NO.	SIZE	CABLE & SIZE	CONDUIT TYPE	FROM	TO	PURPOSE	REMARKS
P-880	3/4"	3 - #12 AWG W 1#12 GND	RGS	PANEL PP-2M-TB	DSW-MOV-40620	480V Power	
P-881	3/4"	3 - #12 AWG W 1#12 GND	RGS	DSW-MOV-40620	MOV-40620	480V Power	
P-882	3/4"	3 - #12 AWG W 1#12 GND	RGS	PANEL PP-2M-TB	DSW-MOV-40720	480V Power	
P-883	3/4"	3 - #12 AWG W 1#12 GND	RGS	DSW-MOV-40720	MOV-40720	480V Power	
P-884	3/4"	3 - #12 AWG W 1#12 GND	RGS	PANEL PP-2N-TB	DSW-MOV-40820	480V Power	
P-885	3/4"	3 - #12 AWG W 1#12 GND	RGS	DSW-MOV-40820	MOV-40820	480V Power	
P-886	3/4"	3 - #12 AWG W 1#12 GND	RGS	PANEL PP-2N-TB	DSW-MOV-40920	480V Power	
P-887	3/4"	3 - #12 AWG W 1#12 GND	RGS	DSW-MOV-40920	MOV-40920	480V Power	
P-888	3/4"	3 - #12 AWG W 1#12 GND	RGS	PANEL PP-2N-TB	DSW-MOV-41020	480V Power	
P-889	3/4"	3 - #12 AWG W 1#12 GND	RGS	DSW-MOV-41020	MOV-41020	480V Power	
P-890	3/4"	3 - #12 AWG W 1#12 GND	RGS	PANEL PP-2N-TB	DSW-MOV-41120	480V Power	
P-891	3/4"	3 - #12 AWG W 1#12 GND	RGS	DSW-MOV-41120	MOV-41120	480V Power	
P-892	3/4"	3 - #12 AWG W 1#12 GND	RGS	PANEL PP-2N-TB	DSW-MOV-41220	480V Power	
P-893	3/4"	3 - #12 AWG W 1#12 GND	RGS	DSW-MOV-41220	MOV-41220	480V Power	
P-894	3/4"	3 - #12 AWG W 1#12 GND	RGS	PANEL PP-2N-TB	DSW-MOV-41320	480V Power	
P-895	3/4"	3 - #12 AWG W 1#12 GND	RGS	DSW-MOV-41320	MOV-41320	480V Power	

CABLE AND CONDUIT SCHEDULE - WEST PARISH WTF							
CONDUIT NO.	SIZE	CABLE & SIZE	CONDUIT TYPE	FROM	TO	PURPOSE	REMARKS
P-896	3/4"	3 - #12 AWG W 1#12 GND	RGS	PANEL PP-2N-TB	DSW-MOV-41420	480V Power	
P-897	3/4"	3 - #12 AWG W 1#12 GND	RGS	DSW-MOV-41420	MOV-41420	480V Power	
P-898	3/4"	3 - #12 AWG W 1#12 GND	RGS	PANEL PP-2N-TB	DSW-MOV-45020	480V Power	
P-899	3/4"	3 - #12 AWG W 1#12 GND	RGS	DSW-MOV-45020	MOV-45020	480V Power	
P-900	1 1/2"	4 - #2 AWG W 1# 8GND	RGS	LP-457-TB	LP-1-SAMPLE-TB	208V Power	
P-901	1 1/2"	4 - #2 AWG W 1# 8GND	RGS	LP-457-TB	LP-1-INSTR-TB	208V Power	
P-902	1 1/2"	4 - #2 AWG W 1# 8GND	RGS	LP-457-TB	LP-2-INSTR-TB	208V Power	
P-903	1 1/2"	4 - #2 AWG W 1# 8GND	RGS	LP-457-TB	LP-3-INSTR-TB	208V Power	
P-904	1 1/2"	4 - #2 AWG W 1# 8GND	RGS	LP-457-TB	LP-LTG-457-TB	208V Power	
P-905	3/4"	2 - #12 AWG W 1#12 GND	RGS	LP-1-SAMPLE-TB	DSW-P-10310	230V Power	
P-906	3/4"	2 - #12 AWG W 1#12 GND	RGS	DSW-P-10310	P-10310	230V Power	
P-907	3/4"	2 - #12 AWG W 1#12 GND	RGS	LP-1-SAMPLE-TB	DSW-P-10330	230V Power	
P-908	3/4"	2 - #12 AWG W 1#12 GND	RGS	DSW-P-10330	P-10330	230V Power	
P-909	1"	2 - #10 AWG W 1#10 GND	RGS	LP-1-SAMPLE-TB	DSW-P-42030	230V Power	
P-910	1"	2 - #10 AWG W 1#10 GND	RGS	DSW-P-42030	P-42030	230V Power	
P-911	1"	2 - #10 AWG W 1#10 GND	RGS	LP-1-SAMPLE-TB	DSW-P-42040	230V Power	

CABLE AND CONDUIT SCHEDULE - WEST PARISH WTF							
CONDUIT NO.	SIZE	CABLE & SIZE	CONDUIT TYPE	FROM	TO	PURPOSE	REMARKS
P-912	1"	2 - #10 AWG W 1#10 GND	RGS	DSW-P-42040	P-42040	230V Power	
-	-	-	-	-	-	-	-
-	-	-	-	-	-	-	-
-	-	-	-	-	-	-	-
-	-	-	-	-	-	-	-
P-917	3/4"	2 - #12 AWG W 1#12 GND	RGS	LP-1-SAMPLE-TB	DSW-P-30010	230V Power	
P-918	3/4"	2 - #12 AWG W 1#12 GND	RGS	DSW-P-30010	P-30010	230V Power	
P-919	3/4"	2 - #12 AWG W 1#12 GND	RGS	LP-1-SAMPLE-TB	DSW-P-30020	230V Power	
P-920	3/4"	2 - #12 AWG W 1#12 GND	RGS	DSW-P-30020	P-30020	230V Power	
P-921	3/4"	2 - #12 AWG W 1#12 GND	RGS	LP-1-SAMPLE-TB	TP-01 (RM 2101)	120V Power	Filter Gallery Electronic Trap Primer (1)
P-922	3/4"	2 - #12 AWG W 1#12 GND	RGS	LP-1-SAMPLE-TB	TP-01 (RM 2101)	120V Power	Filter Gallery Electronic Trap Primer (2)
P-923	3/4"	2 - #12 AWG W 1#12 GND	RGS	LP-1-SAMPLE-TB	TP-01 (RM 2101)	120V Power	Filter Gallery Electronic Trap Primer (3)
P-924	3/4"	2 - #12 AWG W 1#12 GND	RGS	LP-1-SAMPLE-TB	TP-01 (RM 2101)	120V Power	Filter Gallery Electronic Trap Primer (4)
P-925	3/4"	2 - #12 AWG W 1#12 GND	RGS	LP-1-SAMPLE-TB	TP-01 (RM 2100)	120V Power	Central Pipe Gallery Electric Trap Primer (1)
P-926	3/4"	2 - #12 AWG W 1#12 GND	RGS	LP-1-SAMPLE-TB	TP-01 (RM 2100)	120V Power	Central Pipe Gallery Electric Trap Primer (2)

CABLE AND CONDUIT SCHEDULE - WEST PARISH WTF							
CONDUIT NO.	SIZE	CABLE & SIZE	CONDUIT TYPE	FROM	TO	PURPOSE	REMARKS
P-927	3/4"	2 - #12 AWG W 1#12 GND	RGS	LP-1-UPS-MOV-TB	DSW-MOV-40160	230V Power	
P-928	3/4"	2 - #12 AWG W 1#12 GND	RGS	DSW-MOV-40160	MOV-40160	230V Power	
P-929	3/4"	2 - #12 AWG W 1#12 GND	RGS	LP-1-UPS-MOV-TB	DSW-MOV-40260	230V Power	
P-930	3/4"	2 - #12 AWG W 1#12 GND	RGS	DSW-MOV-40260	MOV-40260	230V Power	
P-931	3/4"	2 - #12 AWG W 1#12 GND	RGS	LP-1-UPS-MOV-TB	DSW-MOV-40360	230V Power	
P-932	3/4"	2 - #12 AWG W 1#12 GND	RGS	DSW-MOV-40360	MOV-40360	230V Power	
P-933	3/4"	2 - #12 AWG W 1#12 GND	RGS	LP-1-UPS-MOV-TB	DSW-MOV-40460	230V Power	
P-934	3/4"	2 - #12 AWG W 1#12 GND	RGS	DSW-MOV-40460	MOV-40460	230V Power	
P-935	3/4"	2 - #12 AWG W 1#12 GND	RGS	LP-1-UPS-MOV-TB	DSW-MOV-40560	230V Power	
P-936	3/4"	2 - #12 AWG W 1#12 GND	RGS	DSW-MOV-40560	MOV-40560	230V Power	
P-937	3/4"	2 - #12 AWG W 1#12 GND	RGS	LP-1-UPS-MOV-TB	DSW-MOV-40660	230V Power	
P-938	3/4"	2 - #12 AWG W 1#12 GND	RGS	DSW-MOV-40660	MOV-40660	230V Power	
P-939	3/4"	2 - #12 AWG W 1#12 GND	RGS	LP-1-UPS-MOV-TB	DSW-MOV-40760	230V Power	
P-940	3/4"	2 - #12 AWG W 1#12 GND	RGS	DSW-MOV-40760	MOV-40760	230V Power	
P-941	3/4"	2 - #12 AWG W 1#12 GND	RGS	LP-1-UPS-MOV-TB	DSW-MOV-10110	230V Power	
P-942	3/4"	2 - #12 AWG W 1#12 GND	RGS	DSW-MOV-10110	MOV-10110	230V Power	

CABLE AND CONDUIT SCHEDULE - WEST PARISH WTF							
CONDUIT NO.	SIZE	CABLE & SIZE	CONDUIT TYPE	FROM	TO	PURPOSE	REMARKS
P-943	1"	2 - #10 AWG W 1#10 GND	RGS	LP-1-UPS-MOV-TB	DSW-MOV-34060	230V Power	
P-944	1"	2 - #10 AWG W 1#10 GND	RGS	DSW-MOV-34060	MOV-34060	230V Power	
P-945	3/4"	2 - #12 AWG W 1#12 GND	RGS	LP-2-UPS-MOV-TB	DSW-MOV-40860	230V Power	
P-946	3/4"	2 - #12 AWG W 1#12 GND	RGS	DSW-MOV-40860	MOV-40860	230V Power	
P-947	3/4"	2 - #12 AWG W 1#12 GND	RGS	LP-2-UPS-MOV-TB	DSW-MOV-40960	230V Power	
P-948	3/4"	2 - #12 AWG W 1#12 GND	RGS	DSW-MOV-40960	MOV-40960	230V Power	
P-949	3/4"	2 - #12 AWG W 1#12 GND	RGS	LP-2-UPS-MOV-TB	DSW-MOV-41060	230V Power	
P-950	3/4"	2 - #12 AWG W 1#12 GND	RGS	DSW-MOV-41060	MOV-41060	230V Power	
P-951	3/4"	2 - #12 AWG W 1#12 GND	RGS	LP-2-UPS-MOV-TB	DSW-MOV-41160	230V Power	
P-952	3/4"	2 - #12 AWG W 1#12 GND	RGS	DSW-MOV-41160	MOV-41160	230V Power	
P-953	3/4"	2 - #12 AWG W 1#12 GND	RGS	LP-2-UPS-MOV-TB	DSW-MOV-41260	230V Power	
P-954	3/4"	2 - #12 AWG W 1#12 GND	RGS	DSW-MOV-41260	MOV-41260	230V Power	
P-955	3/4"	2 - #12 AWG W 1#12 GND	RGS	LP-2-UPS-MOV-TB	DSW-MOV-41360	230V Power	
P-956	3/4"	2 - #12 AWG W 1#12 GND	RGS	DSW-MOV-41360	MOV-41360	230V Power	
P-957	3/4"	2 - #12 AWG W 1#12 GND	RGS	LP-2-UPS-MOV-TB	DSW-MOV-41460	230V Power	
P-958	3/4"	2 - #12 AWG W 1#12 GND	RGS	DSW-MOV-41460	MOV-41460	230V Power	

CABLE AND CONDUIT SCHEDULE - WEST PARISH WTF							
CONDUIT NO.	SIZE	CABLE & SIZE	CONDUIT TYPE	FROM	TO	PURPOSE	REMARKS
P-959	3/4"	2 - #12 AWG W 1#12 GND	RGS	LP-2-UPS-MOV-TB	DSW-MOV-10120	230V Power	
P-960	3/4"	2 - #12 AWG W 1#12 GND	RGS	DSW-MOV-10120	MOV-10120	230V Power	
P-961	1"	2 - #10 AWG W 1#10 GND	RGS	LP-2-UPS-MOV-TB	DSW-MOV-34090	230V Power	
P-962	1"	2 - #10 AWG W 1#10 GND	RGS	DSW-MOV-34090	MOV-34090	230V Power	
P-963	3/4"	2 - #12 AWG W 1#12 GND	RGS	LP-1-INSTR-TB	FIT-10111	120V Power	
P-964	3/4"	2 - #12 AWG W 1#12 GND	RGS	LP-1-INSTR-TB	FIT-10121	120V Power	
P-965	3/4"	2 - #12 AWG W 1#12 GND	RGS	LP-1-INSTR-TB	AIT-10311	120V Power	
P-966	3/4"	2 - #12 AWG W 1#12 GND	RGS	LP-1-INSTR-TB	AIT-10312	120V Power	
P-967	3/4"	2 - #12 AWG W 1#12 GND	RGS	LP-1-INSTR-TB	AIT-10331	120V Power	
P-968	3/4"	2 - #12 AWG W 1#12 GND	RGS	LP-1-INSTR-TB	AIT-10332	120V Power	
P-969	3/4"	2 - #12 AWG W 1#12 GND	RGS	LP-1-INSTR-TB	AIT-10321	120V Power	
P-970	3/4"	2 - #12 AWG W 1#12 GND	RGS	LP-1-INSTR-TB	AIT-10322	120V Power	
P-971	3/4"	2 - #12 AWG W 1#12 GND	RGS	LP-1-INSTR-TB	AIT-10341	120V Power	
P-972	3/4"	2 - #12 AWG W 1#12 GND	RGS	LP-1-INSTR-TB	AIT-10342	120V Power	
P-973	3/4"	2 - #12 AWG W 1#12 GND	RGS	LP-1-INSTR-TB	AIT-30012	120V Power	
P-974	3/4"	2 - #12 AWG W 1#12 GND	RGS	LP-1-INSTR-TB	AIT-30022	120V Power	

CABLE AND CONDUIT SCHEDULE - WEST PARISH WTF							
CONDUIT NO.	SIZE	CABLE & SIZE	CONDUIT TYPE	FROM	TO	PURPOSE	REMARKS
P-975	3/4"	2 - #12 AWG W 1#12 GND	RGS	LP-1-INSTR-TB	FSL-33012	120V Power	
P-976	3/4"	2 - #12 AWG W 1#12 GND	RGS	LP-1-INSTR-TB	FSL-33022	120V Power	
P-977	3/4"	2 - #12 AWG W 1#12 GND	RGS	LP-1-INSTR-TB	FSL-33032	120V Power	
P-978	3/4"	2 - #12 AWG W 1#12 GND	RGS	LP-1-INSTR-TB	FSL-33042	120V Power	
P-979	3/4"	2 - #12 AWG W 1#12 GND	RGS	LP-1-INSTR-TB	AIT-40104	120V Power	
P-980	3/4"	2 - #12 AWG W 1#12 GND	RGS	LP-1-INSTR-TB	FIT-40105	120V Power	
P-981	3/4"	2 - #12 AWG W 1#12 GND	RGS	LP-1-INSTR-TB	AIT-40204	120V Power	
P-982	3/4"	2 - #12 AWG W 1#12 GND	RGS	LP-1-INSTR-TB	FIT-40205	120V Power	
P-983	3/4"	2 - #12 AWG W 1#12 GND	RGS	LP-1-INSTR-TB	AIT-42041	120V Power	
P-984	3/4"	2 - #12 AWG W 1#12 GND	RGS	LP-1-INSTR-TB	AIT-42042	120V Power	
P-985	3/4"	2 - #12 AWG W 1#12 GND	RGS	LP-1-INSTR-TB	AIT-40304	120V Power	
P-986	3/4"	2 - #12 AWG W 1#12 GND	RGS	LP-1-INSTR-TB	FIT-40305	120V Power	
-	-	-	-	-	-	-	-
P-988	3/4"	2 - #12 AWG W 1#12 GND	RGS	LP-1-INSTR-TB	RIO-FLT-A1	120V Power	
P-989	3/4"	2 - #12 AWG W 1#12 GND	RGS	LP-1-INSTR-TB	RIO-FLT-B1	120V Power	
P-990	3/4"	2 - #12 AWG W 1#12 GND	RGS	LP-2-INSTR-TB	AIT-40404	120V Power	

CABLE AND CONDUIT SCHEDULE - WEST PARISH WTF							
CONDUIT NO.	SIZE	CABLE & SIZE	CONDUIT TYPE	FROM	TO	PURPOSE	REMARKS
P-991	3/4"	2 - #12 AWG W 1#12 GND	RGS	LP-2-INSTR-TB	AIT-40504	120V Power	
P-992	3/4"	2 - #12 AWG W 1#12 GND	RGS	LP-2-INSTR-TB	AIT-40604	120V Power	
P-993	3/4"	2 - #12 AWG W 1#12 GND	RGS	LP-2-INSTR-TB	AIT-40704	120V Power	
P-994	3/4"	2 - #12 AWG W 1#12 GND	RGS	LP-2-INSTR-TB	AIT-40804	120V Power	
P-995	3/4"	2 - #12 AWG W 1#12 GND	RGS	LP-2-INSTR-TB	AIT-40904	120V Power	
P-996	3/4"	2 - #12 AWG W 1#12 GND	RGS	LP-2-INSTR-TB	AIT-41004	120V Power	
P-997	3/4"	2 - #12 AWG W 1#12 GND	RGS	LP-2-INSTR-TB	AIT-41104	120V Power	
P-998	3/4"	2 - #12 AWG W 1#12 GND	RGS	LP-2-INSTR-TB	AIT-41204	120V Power	
P-999	3/4"	2 - #12 AWG W 1#12 GND	RGS	LP-2-INSTR-TB	FIT-40405	120V Power	
P-1000	3/4"	2 - #12 AWG W 1#12 GND	RGS	LP-2-INSTR-TB	FIT-40505	120V Power	
P-1001	3/4"	2 - #12 AWG W 1#12 GND	RGS	LP-2-INSTR-TB	FIT-40605	120V Power	
P-1002	3/4"	2 - #12 AWG W 1#12 GND	RGS	LP-2-INSTR-TB	FIT-40705	120V Power	
P-1003	3/4"	2 - #12 AWG W 1#12 GND	RGS	LP-2-INSTR-TB	FIT-40805	120V Power	
P-1004	3/4"	2 - #12 AWG W 1#12 GND	RGS	LP-2-INSTR-TB	FIT-40905	120V Power	
P-1005	3/4"	2 - #12 AWG W 1#12 GND	RGS	LP-2-INSTR-TB	FIT-41005	120V Power	
P-1006	3/4"	2 - #12 AWG W 1#12 GND	RGS	LP-2-INSTR-TB	FIT-41105	120V Power	

CABLE AND CONDUIT SCHEDULE - WEST PARISH WTF							
CONDUIT NO.	SIZE	CABLE & SIZE	CONDUIT TYPE	FROM	TO	PURPOSE	REMARKS
P-1007	3/4"	2 - #12 AWG W 1#12 GND	RGS	LP-2-INSTR-TB	FIT-41205	120V Power	
P-1008	3/4"	2 - #12 AWG W 1#12 GND	RGS	LP-2-INSTR-TB	FSL-10314	120V Power	
P-1009	3/4"	2 - #12 AWG W 1#12 GND	RGS	LP-2-INSTR-TB	FSL-10334	120V Power	
P-1010	3/4"	2 - #12 AWG W 1#12 GND	RGS	LP-2-INSTR-TB	LCS-42030	120V Power	
P-1011	3/4"	2 - #12 AWG W 1#12 GND	RGS	LP-2-INSTR-TB	LCS-42040	120V Power	
P-1012	3/4"	2 - #12 AWG W 1#12 GND	RGS	LP-2-INSTR-TB	AIT-46004	120V Power	
P-1013	3/4"	2 - #12 AWG W 1#12 GND	RGS	LP-2-INSTR-TB	FIT-60504	120V Power	
P-1014	3/4"	2 - #12 AWG W 1#12 GND	RGS	LP-2-INSTR-TB	FIT-60505	120V Power	
P-1015	3/4"	2 - #12 AWG W 1#12 GND	RGS	LP-2-INSTR-TB	AIT-60506	120V Power	
P-1016	3/4"	2 - #12 AWG W 1#12 GND	RGS	LP-2-INSTR-TB	FSL-42053	120V Power	
P-1017	3/4"	2 - #12 AWG W 1#12 GND	RGS	LP-2-INSTR-TB	FSL-42058	120V Power	
P-1018	3/4"	2 - #12 AWG W 1#12 GND	RGS	LP-2-INSTR-TB	FSL-30014	120V Power	
P-1019	3/4"	2 - #12 AWG W 1#12 GND	RGS	LP-2-INSTR-TB	FSL-30024	120V Power	
P-1019.1	3/4"	2 - #12 AWG W 1#12 GND	RGS	LP-2-INSTR-TB	LSH-70730	120V Power	
P-1020	3/4"	2 - #12 AWG W 1#12 GND	RGS	LP-3-INSTR-TB	AIT-41304	120V Power	
P-1021	3/4"	2 - #12 AWG W 1#12 GND	RGS	LP-3-INSTR-TB	AIT-41404	120V Power	

CABLE AND CONDUIT SCHEDULE - WEST PARISH WTF							
CONDUIT NO.	SIZE	CABLE & SIZE	CONDUIT TYPE	FROM	TO	PURPOSE	REMARKS
P-1022	3/4"	2 - #12 AWG W 1#12 GND	RGS	LP-3-INSTR-TB	FIT-41305	120V Power	
P-1023	3/4"	2 - #12 AWG W 1#12 GND	RGS	LP-3-INSTR-TB	FIT-41405	120V Power	
P-1024	3/4"	2 - #12 AWG W 1#12 GND	RGS	LP-3-INSTR-TB	AIT-42061	120V Power	
P-1025	3/4"	2 - #12 AWG W 1#12 GND	RGS	LP-3-INSTR-TB	AIT-42062	120V Power	
P-1026	3/4"	2 - #12 AWG W 1#12 GND	RGS	LP-3-INSTR-TB	FSL-10325	120V Power	
P-1027	3/4"	2 - #12 AWG W 1#12 GND	RGS	LP-3-INSTR-TB	FSL-10345	120V Power	
P-1028	3/4"	2 - #12 AWG W 1#12 GND	RGS	LP-3-INSTR-TB	FIT-46001	120V Power	
P-1029	3/4"	2 - #12 AWG W 1#12 GND	RGS	LP-3-INSTR-TB	FIT-46002	120V Power	
P-1030	3/4"	2 - #12 AWG W 1#12 GND	RGS	LP-3-INSTR-TB	DDC-04	120V Power	
P-1031	3/4"	2 - #12 AWG W 1#12 GND	RGS	LP-3-INSTR-TB	DDC-12	120V Power	
P-1032	3/4"	2 - #12 AWG W 1#12 GND	RGS	LP-3-INSTR-TB	ESD-07	120V Power	
P-1033	3/4"	2 - #12 AWG W 1#12 GND	RGS	LP-3-INSTR-TB	BMS-03	120V Power	
P-1034	3/4"	2 - #12 AWG W 1#12 GND	RGS	LP-3-INSTR-TB	DDC-09	120V Power	
P-1035	3/4"	2 - #12 AWG W 1#12 GND	RGS	LP-3-INSTR-TB	ESD-02	120V Power	
P-1035.1	3/4"	2 - #12 AWG W 1#12 GND	RGS	LP-3-INSTR-TB	LCP-AP45	120V Power	
P-1035.2	3/4"	2 - #12 AWG W 1#12 GND	RGS	LP-3-INSTR-TB	LCP-AP50	120V Power	

CABLE AND CONDUIT SCHEDULE - WEST PARISH WTF							
CONDUIT NO.	SIZE	CABLE & SIZE	CONDUIT TYPE	FROM	TO	PURPOSE	REMARKS
P-1035.3	3/4"	2 - #12 AWG W 1#12 GND	RGS	LP-3-INSTR-TB	LCP-AP55	120V Power	
P-1035.4	3/4"	2 - #12 AWG W 1#12 GND	RGS	LP-3-INSTR-TB	LCP-AP60	120V Power	
P-1035.5	3/4"	2 - #12 AWG W 1#12 GND	RGS	LP-3-INSTR-TB	OWS-FLT-A1	120V Power	
P-1035.6	3/4"	2 - #12 AWG W 1#12 GND	RGS	LP-3-INSTR-TB	OWS-FLT-B1	120V Power	
P-1035.7	3/4"	2 - #12 AWG W 1#12 GND	RGS	LP-3-INSTR-TB	ESD-01	120V Power	
P-1035.8	3/4"	2 - #12 AWG W 1#12 GND	RGS	LP-3-INSTR-TB	ESD-03	120V Power	
P-1035.9	3/4"	2 - #12 AWG W 1#12 GND	RGS	LP-3-INSTR-TB	ESD-04	120V Power	
P-1035.10	3/4"	2 - #12 AWG W 1#12 GND	RGS	LP-3-INSTR-TB	ESD-05	120V Power	
P-1035.11	3/4"	2 - #12 AWG W 1#12 GND	RGS	LP-3-INSTR-TB	ESD-06	120V Power	
P-1036	3/4"	2 - #8 AWG W 1#10 GND	RGS	LP-LTG-457-TB	TB RECP - EL. 457.00	120V Power	
P-1037	3/4"	2 - #8 AWG W 1#10 GND	RGS	LP-LTG-457-TB	TB RECP - EL. 457.00	120V Power	
P-1038	3/4"	2 - #10 AWG W 1#10 GND	RGS	LP-LTG-457-TB	TB LTG - CENTRAL PIPE GALLERY	120V Power	
P-1039	3/4"	2 - #10 AWG W 1#10 GND	RGS	LP-LTG-457-TB	TB LTG - FILTER PIPE GALLERY	120V Power	
P-1040	3/4"	2 - #8 AWG W 1#10 GND	RGS	LP-LTG-457-TB	TB RECP - EL. 457.00	120V Power	

CABLE AND CONDUIT SCHEDULE - WEST PARISH WTF							
CONDUIT NO.	SIZE	CABLE & SIZE	CONDUIT TYPE	FROM	TO	PURPOSE	REMARKS
P-1041	3/4"	2 - #10 AWG W 1#10 GND	RGS	LP-LTG-457-TB	TB LTG - CENTRAL PIPE GALLERY	120V Power	
P-1042	3/4"	2 - #10 AWG W 1#10 GND	RGS	LP-LTG-457-TB	TB LTG - FILTER PIPE GALLERY	120V Power	
P-1043	3/4"	2 - #12 AWG W 1#12 GND	RGS	LP-LTG-457-TB	TB LTG - STORAGE	120V Power	
P-1044	2"	4 - #4/0 AWG W 1#6 GND	RGS	LP-471-TB	LP-1-CHEM-TB	208V Power	
P-1045	1 1/2"	4 - #2 AWG W 1# 8GND	RGS	LP-471-TB	LP-2-CHEM-TB	208V Power	
P-1046	1 1/2"	4 - #2 AWG W 1# 8GND	RGS	LP-471-TB	LP-4-INSTR-TB	208V Power	
P-1047	1 1/2"	4 - #2 AWG W 1# 8GND	RGS	LP-471-TB	LP-5-INSTR-TB	208V Power	
P-1048	1 1/2"	4 - #2 AWG W 1# 8GND	RGS	LP-471-TB	LP-6-INSTR-TB	208V Power	
P-1049	1 1/2"	4 - #2 AWG W 1# 8GND	RGS	LP-471-TB	LP-1-PLUMB-TB	208V Power	
P-1050	2"	4 - #4/0 AWG W 1# 6GND	RGS	LP-471-TB	LP-LTG-471-TB	208V Power	
P-1051	3/4"	2 - #12 AWG W 1#12 GND	PVC COATED RGS	LP-1-CHEM-TB	P-51120	230V Power	
P-1052	3/4"	2 - #12 AWG W 1#12 GND	PVC COATED RGS	LP-1-CHEM-TB	P-51130	230V Power	
P-1053	3/4"	2 - #12 AWG W 1#12 GND	PVC COATED RGS	LP-1-CHEM-TB	P-51140	230V Power	

CABLE AND CONDUIT SCHEDULE - WEST PARISH WTF							
CONDUIT NO.	SIZE	CABLE & SIZE	CONDUIT TYPE	FROM	TO	PURPOSE	REMARKS
P-1054	3/4"	2 - #12 AWG W 1#12 GND	PVC COATED RGS	LP-1-CHEM-TB	P-51150	230V Power	
P-1055	3/4"	2 - #12 AWG W 1#12 GND	PVC SCHEDULE 80	LP-1-CHEM-TB	P-52120	230V Power	
P-1056	3/4"	2 - #12 AWG W 1#12 GND	PVC SCHEDULE 80	LP-1-CHEM-TB	P-52130	230V Power	
P-1057	3/4"	2 - #12 AWG W 1#12 GND	PVC SCHEDULE 80	LP-1-CHEM-TB	P-52140	230V Power	
P-1058	3/4"	2 - #12 AWG W 1#12 GND	PVC SCHEDULE 80	LP-1-CHEM-TB	P-52150	230V Power	
P-1059	3/4"	2 - #10 AWG W 1#10 GND	PVC COATED RGS	LP-1-CHEM-TB	SKID-55120	120V Power	
P-1060	3/4"	2 - #10 AWG W 1#10 GND	PVC COATED RGS	LP-1-CHEM-TB	SKID-55130	120V Power	
P-1060.1	3/4"	2 - #12 AWG W 1#12 GND	PVC COATED RGS	LP-1-CHEM-TB	SKID-56120	120V Power	
P-1060.2	3/4"	2 - #12 AWG W 1#12 GND	PVC COATED RGS	LP-1-CHEM-TB	SKID-56130	120V Power	
P-1061	3/4"	2 - #10 AWG W 1#10 GND	PVC COATED RGS	LP-1-CHEM-TB	DSW-MX-55112	120V Power	

CABLE AND CONDUIT SCHEDULE - WEST PARISH WTF							
CONDUIT NO.	SIZE	CABLE & SIZE	CONDUIT TYPE	FROM	TO	PURPOSE	REMARKS
P-1062	3/4"	2 - #10 AWG W 1#10 GND	PVC COATED RGS	DSW-MX-55112	MX-55112	120V Power	
P-1063	3/4"	2 - #10 AWG W 1#10 GND	PVC COATED RGS	LP-1-CHEM-TB	DSW-MX-55117	120V Power	
P-1064	3/4"	2 - #10 AWG W 1#12 GND	PVC COATED RGS	DSW-MX-55117	MX-55117	120V Power	
P-1064.1	1 1/2"	4 - #2 AWG W 1# 8GND	RGS	LP-1-CHEM-TB	GENERATOR PANEL	208V Power	
P-1065	3/4"	2 - #12 AWG W 1#12 GND	PVC SCHEDULE 80	LP-2-CHEM-TB	P-52160	230V Power	
P-1066	3/4"	2 - #12 AWG W 1#12 GND	PVC SCHEDULE 80	LP-2-CHEM-TB	P-52170	230V Power	
P-1067	3/4"	2 - #12 AWG W 1#12 GND	PVC SCHEDULE 80	LP-2-CHEM-TB	P-52180	230V Power	
P-1068	3/4"	2 - #12 AWG W 1#12 GND	PVC SCHEDULE 80	LP-2-CHEM-TB	P-52190	230V Power	
P-1069	3/4"	2 - #12 AWG W 1#12 GND	PVC SCHEDULE 80	LP-2-CHEM-TB	P-53120	230V Power	
P-1070	3/4"	2 - #12 AWG W 1#12 GND	PVC SCHEDULE 80	LP-2-CHEM-TB	P-53130	230V Power	
P-1071	3/4"	2 - #12 AWG W 1#12 GND	PVC SCHEDULE 80	LP-2-CHEM-TB	P-53140	230V Power	

CABLE AND CONDUIT SCHEDULE - WEST PARISH WTF							
CONDUIT NO.	SIZE	CABLE & SIZE	CONDUIT TYPE	FROM	TO	PURPOSE	REMARKS
P-1072	3/4"	2 - #12 AWG W 1#12 GND	PVC SCHEDULE 80	LP-2-CHEM-TB	P-53150	230V Power	
P-1073	3/4"	2 - #12 AWG W 1#12 GND	PVC SCHEDULE 80	LP-2-CHEM-TB	P-54120	230V Power	
P-1074	3/4"	2 - #12 AWG W 1#12 GND	PVC SCHEDULE 80	LP-2-CHEM-TB	P-54130	230V Power	
P-1075	3/4"	2 - #12 AWG W 1#12 GND	PVC SCHEDULE 80	LP-2-CHEM-TB	P-54140	230V Power	
P-1076	3/4"	2 - #12 AWG W 1#12 GND	PVC SCHEDULE 80	LP-2-CHEM-TB	P-54150	230V Power	
P-1077	3/4"	2 - #12 AWG W 1#12 GND	RGS	LP-4-INSTR-TB	LCS-51000	120V Power	
P-1078	3/4"	2 - #12 AWG W 1#12 GND	PVC COATED RGS	LP-4-INSTR-TB	LSH-51012	120V Power	
P-1079	3/4"	2 - #12 AWG W 1#12 GND	PVC COATED RGS	LP-4-INSTR-TB	LSH-51022	120V Power	
P-1080	3/4"	2 - #12 AWG W 1#12 GND	PVC COATED RGS	LP-4-INSTR-TB	LSH-51032	120V Power	
P-1081	3/4"	2 - #12 AWG W 1#12 GND	PVC COATED RGS	LP-4-INSTR-TB	LSH-51042	120V Power	
P-1082	3/4"	2 - #12 AWG W 1#12 GND	PVC COATED RGS	LP-4-INSTR-TB	LSH-51101	120V Power	

CABLE AND CONDUIT SCHEDULE - WEST PARISH WTF							
CONDUIT NO.	SIZE	CABLE & SIZE	CONDUIT TYPE	FROM	TO	PURPOSE	REMARKS
P-1083	3/4"	2 - #12 AWG W 1#12 GND	PVC COATED RGS	LP-4-INSTR-TB	FSH-51102	120V Power	
P-1083.1	3/4"	2 - #12 AWG W 1#12 GND	PVC COATED RGS	LP-4-INSTR-TB	FSH-51103	120V Power	
P-1084	3/4"	2 - #12 AWG W 1#12 GND	PVC COATED RGS	LP-4-INSTR-TB	LSH-51112	120V Power	
P-1085	3/4"	2 - #12 AWG W 1#12 GND	PVC COATED RGS	LP-4-INSTR-TB	LCP-51120	120V Power	
P-1086	3/4"	2 - #12 AWG W 1#12 GND	PVC COATED RGS	LP-4-INSTR-TB	LCP-51130	120V Power	
P-1087	3/4"	2 - #12 AWG W 1#12 GND	PVC COATED RGS	LP-4-INSTR-TB	LCP-51140	120V Power	
P-1088	3/4"	2 - #12 AWG W 1#12 GND	PVC COATED RGS	LP-4-INSTR-TB	LCP-51150	120V Power	
P-1089	3/4"	2 - #12 AWG W 1#12 GND	RGS	LP-4-INSTR-TB	FSH-51001	120V Power	
P-1090	3/4"	2 - #12 AWG W 1#12 GND	RGS	LP-4-INSTR-TB	LCS-56000	120V Power	
P-1091	3/4"	2 - #12 AWG W 1#12 GND	PVC COATED RGS	LP-4-INSTR-TB	FSH-56102	120V Power	
P-1092	3/4"	2 - #12 AWG W 1#12 GND	PVC COATED RGS	LP-4-INSTR-TB	LSH-56012	120V Power	

CABLE AND CONDUIT SCHEDULE - WEST PARISH WTF							
CONDUIT NO.	SIZE	CABLE & SIZE	CONDUIT TYPE	FROM	TO	PURPOSE	REMARKS
P-1093	3/4"	2 - #12 AWG W 1#12 GND	PVC COATED RGS	LP-4-INSTR-TB	LSH-56022	120V Power	
P-1094	3/4"	2 - #12 AWG W 1#12 GND	PVC COATED RGS	LP-4-INSTR-TB	LSH-56101	120V Power	
P-1095	3/4"	2 - #12 AWG W 1#12 GND	PVC COATED RGS	LP-4-INSTR-TB	LSH-56112	120V Power	
P-1096	3/4"	2 - #12 AWG W 1#12 GND	PVC COATED RGS	LP-4-INSTR-TB	LCP-56120	120V Power	
P-1097	3/4"	2 - #12 AWG W 1#12 GND	PVC COATED RGS	LP-4-INSTR-TB	LCP-56130	120V Power	
P-1098	3/4"	2 - #12 AWG W 1#12 GND	RGS	LP-4-INSTR-TB	LCS-53000	120V Power	
P-1099	3/4"	2 - #12 AWG W 1#12 GND	PVC SCHEDULE 80	LP-4-INSTR-TB	LSH-53012	120V Power	
P-1100	3/4"	2 - #12 AWG W 1#12 GND	PVC SCHEDULE 80	LP-4-INSTR-TB	LSH-53022	120V Power	
P-1101	3/4"	2 - #12 AWG W 1#12 GND	PVC SCHEDULE 80	LP-4-INSTR-TB	FSH-53102	120V Power	
P-1102	3/4"	2 - #12 AWG W 1#12 GND	PVC SCHEDULE 80	LP-4-INSTR-TB	LSH-53101	120V Power	
P-1103	3/4"	2 - #12 AWG W 1#12 GND	PVC SCHEDULE 80	LP-4-INSTR-TB	LSH-53112	120V Power	

CABLE AND CONDUIT SCHEDULE - WEST PARISH WTF							
CONDUIT NO.	SIZE	CABLE & SIZE	CONDUIT TYPE	FROM	TO	PURPOSE	REMARKS
P-1104	3/4"	2 - #12 AWG W 1#12 GND	PVC SCHEDULE 80	LP-4-INSTR-TB	LCP-53120	120V Power	
P-1105	3/4"	2 - #12 AWG W 1#12 GND	PVC SCHEDULE 80	LP-4-INSTR-TB	LCP-53130	120V Power	
P-1106	3/4"	2 - #12 AWG W 1#12 GND	PVC SCHEDULE 80	LP-4-INSTR-TB	LCP-53140	120V Power	
P-1107	3/4"	2 - #12 AWG W 1#12 GND	PVC SCHEDULE 80	LP-4-INSTR-TB	LCP-53150	120V Power	
P-1108	3/4"	2 - #12 AWG W 1#12 GND	PVC SCHEDULE 80	LP-5-INSTR-TB	LCP-52120	120V Power	
P-1109	3/4"	2 - #12 AWG W 1#12 GND	PVC SCHEDULE 80	LP-5-INSTR-TB	LCP-52130	120V Power	
P-1110	3/4"	2 - #12 AWG W 1#12 GND	PVC SCHEDULE 80	LP-5-INSTR-TB	LCP-52140	120V Power	
P-1111	3/4"	2 - #12 AWG W 1#12 GND	PVC SCHEDULE 80	LP-5-INSTR-TB	LCP-52150	120V Power	
P-1112	3/4"	2 - #12 AWG W 1#12 GND	PVC SCHEDULE 80	LP-5-INSTR-TB	LCP-52160	120V Power	
P-1113	3/4"	2 - #12 AWG W 1#12 GND	PVC SCHEDULE 80	LP-5-INSTR-TB	LCP-52170	120V Power	

CABLE AND CONDUIT SCHEDULE - WEST PARISH WTF							
CONDUIT NO.	SIZE	CABLE & SIZE	CONDUIT TYPE	FROM	TO	PURPOSE	REMARKS
P-1114	3/4"	2 - #12 AWG W 1#12 GND	PVC SCHEDULE 80	LP-5-INSTR-TB	LCP-52180	120V Power	
P-1115	3/4"	2 - #12 AWG W 1#12 GND	PVC SCHEDULE 80	LP-5-INSTR-TB	LCP-52190	120V Power	
P-1116	3/4"	2 - #12 AWG W 1#12 GND	RGS	LP-5-INSTR-TB	LCS-52000	120V Power	
P-1117	3/4"	2 - #12 AWG W 1#12 GND	PVC SCHEDULE 80	LP-5-INSTR-TB	LSH-52012	120V Power	
P-1118	3/4"	2 - #12 AWG W 1#12 GND	PVC SCHEDULE 80	LP-5-INSTR-TB	LSH-52022	120V Power	
P-1119	3/4"	2 - #12 AWG W 1#12 GND	PVC SCHEDULE 80	LP-5-INSTR-TB	FSH-52101	120V Power	
P-1120	3/4"	2 - #12 AWG W 1#12 GND	PVC SCHEDULE 80	LP-5-INSTR-TB	LSH-52102	120V Power	
P-1121	3/4"	2 - #12 AWG W 1#12 GND	PVC SCHEDULE 80	LP-5-INSTR-TB	LSH-52112	120V Power	
P-1121.1	3/4"	2 - #12 AWG W 1#12 GND	PVC SCHEDULE 80	LP-5-INSTR-TB	LSH-52117	120V Power	
P-1122	3/4"	2 - #12 AWG W 1#12 GND	RGS	LP-5-INSTR-TB	FSH-51002	120V Power	
P-1123	3/4"	2 - #12 AWG W 1#12 GND	RGS	LP-5-INSTR-TB	LCS-54000	120V Power	

CABLE AND CONDUIT SCHEDULE - WEST PARISH WTF							
CONDUIT NO.	SIZE	CABLE & SIZE	CONDUIT TYPE	FROM	TO	PURPOSE	REMARKS
P-1124	3/4"	2 - #12 AWG W 1#12 GND	PVC SCHEDULE 80	LP-5-INSTR-TB	LSH-54012	120V Power	
P-1125	3/4"	2 - #12 AWG W 1#12 GND	PVC SCHEDULE 80	LP-5-INSTR-TB	LSH-54022	120V Power	
P-1126	3/4"	2 - #12 AWG W 1#12 GND	PVC SCHEDULE 80	LP-5-INSTR-TB	LSH-54032	120V Power	
P-1127	3/4"	2 - #12 AWG W 1#12 GND	PVC SCHEDULE 80	LP-5-INSTR-TB	LSH-54042	120V Power	
P-1128	3/4"	2 - #12 AWG W 1#12 GND	PVC SCHEDULE 80	LP-5-INSTR-TB	LSH-54052	120V Power	
P-1129	3/4"	2 - #12 AWG W 1#12 GND	PVC SCHEDULE 80	LP-5-INSTR-TB	LSH-54112	120V Power	
P-1130	3/4"	2 - #12 AWG W 1#12 GND	PVC SCHEDULE 80	LP-5-INSTR-TB	LSH-54101	120V Power	
P-1131	3/4"	2 - #12 AWG W 1#12 GND	PVC SCHEDULE 80	LP-5-INSTR-TB	FSH-54102	120V Power	
P-1132	3/4"	2 - #12 AWG W 1#12 GND	PVC SCHEDULE 80	LP-5-INSTR-TB	LCP-54120	120V Power	
P-1133	3/4"	2 - #12 AWG W 1#12 GND	PVC SCHEDULE 80	LP-5-INSTR-TB	LCP-54130	120V Power	

CABLE AND CONDUIT SCHEDULE - WEST PARISH WTF							
CONDUIT NO.	SIZE	CABLE & SIZE	CONDUIT TYPE	FROM	TO	PURPOSE	REMARKS
P-1134	3/4"	2 - #12 AWG W 1#12 GND	PVC SCHEDULE 80	LP-5-INSTR-TB	LCP-54140	120V Power	
P-1135	3/4"	2 - #12 AWG W 1#12 GND	PVC SCHEDULE 80	LP-5-INSTR-TB	LCP-54150	120V Power	
P-1136	3/4"	2 - #12 AWG W 1#12 GND	RGS	LP-5-INSTR-TB	RIO-MCC-1A	120V Power	
P-1137	3/4"	2 - #12 AWG W 1#12 GND	RGS	LP-5-INSTR-TB	RIO-MCC-1D	120V Power	
P-1137.1	3/4"	2 - #12 AWG W 1#12 GND	RGS	LP-6-INSTR-TB	OWP-CHEM	120V Power	
P-1138	3/4"	2 - #12 AWG W 1#12 GND	PVC SCHEDULE 80	LP-6-INSTR-TB	FSL-52105	120V Power	
P-1139	3/4"	2 - #12 AWG W 1#12 GND	PVC SCHEDULE 80	LP-6-INSTR-TB	FSL-52106	120V Power	
P-1140	3/4"	2 - #12 AWG W 1#12 GND	PVC SCHEDULE 80	LP-6-INSTR-TB	FSL-52107	120V Power	
P-1141	3/4"	2 - #12 AWG W 1#12 GND	PVC SCHEDULE 80	LP-6-INSTR-TB	FSL-52108	120V Power	
P-1142	3/4"	2 - #12 AWG W 1#12 GND	RGS	LP-6-INSTR-TB	FSH-51003	120V Power	
P-1143	3/4"	2 - #12 AWG W 1#12 GND	RGS	LP-6-INSTR-TB	FSH-51004	120V Power	
P-1144	3/4"	2 - #12 AWG W 1#12 GND	PVC COATED RGS	LP-6-INSTR-TB	LSH-55101	120V Power	

CABLE AND CONDUIT SCHEDULE - WEST PARISH WTF							
CONDUIT NO.	SIZE	CABLE & SIZE	CONDUIT TYPE	FROM	TO	PURPOSE	REMARKS
P-1145	3/4"	2 - #12 AWG W 1#12 GND	PVC COATED RGS	LP-6-INSTR-TB	FSH-55102	120V Power	
P-1146	3/4"	2 - #12 AWG W 1#12 GND	PVC COATED RGS	LP-6-INSTR-TB	LCS-55112	120V Power	
P-1147	3/4"	2 - #12 AWG W 1#12 GND	PVC COATED RGS	LP-6-INSTR-TB	LCS-55117	120V Power	
P-1148	3/4"	2 - #12 AWG W 1#12 GND	PVC COATED RGS	LP-6-INSTR-TB	LCP-55120	120V Power	
P-1149	3/4"	2 - #12 AWG W 1#12 GND	PVC COATED RGS	LP-6-INSTR-TB	LCP-55130	120V Power	
P-1150	3/4"	2 - #12 AWG W 1#12 GND	PVC COATED RGS	LP-6-INSTR-TB	WIT-55111	120V Power	
P-1151	3/4"	2 - #12 AWG W 1#12 GND	PVC COATED RGS	LP-6-INSTR-TB	WIT-55116	120V Power	
P-1152	3/4"	2 - #12 AWG W 1#12 GND	RGS	LP-6-INSTR-TB	RIO-CHEM-A	120V Power	
P-1153	3/4"	2 - #12 AWG W 1#12 GND	RGS	LP-6-INSTR-TB	RIO-CHEM-B	120V Power	
P-1154	3/4"	2 - #12 AWG W 1#12 GND	RGS	LP-6-INSTR-TB	RIO-CHEM-C	120V Power	
P-1155	3/4"	2 - #12 AWG W 1#12 GND	RGS	LP-6-INSTR-TB	FSL-42045	120V Power	
P-1156	3/4"	2 - #12 AWG W 1#12 GND	RGS	LP-6-INSTR-TB	FSL-42046	120V Power	

CABLE AND CONDUIT SCHEDULE - WEST PARISH WTF							
CONDUIT NO.	SIZE	CABLE & SIZE	CONDUIT TYPE	FROM	TO	PURPOSE	REMARKS
P-1157	3/4"	2 - #12 AWG W 1#12 GND	RGS	LP-6-INSTR-TB	FSL-42047	120V Power	
P-1158	3/4"	2 - #12 AWG W 1#12 GND	RGS	LP-6-INSTR-TB	FSL-42048	120V Power	
-	-	-	-	-	-	-	-
P-1160	3/4"	2 - #12 AWG W 1#12 GND	RGS	LP-6-INSTR-TB	FIT-34009	120V Power	
P-1161	3/4"	2 - #12 AWG W 1#12 GND	PVC SCHEDULE 80	LP-6-INSTR-TB	LSH-54103	120V Power	
P-1162	3/4"	2 - #12 AWG W 1#12 GND	PVC SCHEDULE 80	LP-6-INSTR-TB	FSH-54104	120V Power	
P-1162.1	3/4"	2 - #10 AWG W 1#12 GND	RGS	LP-6-INSTR-TB	LCP-AP35	120V Power	
P-1162.2	3/4"	2 - #10 AWG W 1#12 GND	RGS	LP-6-INSTR-TB	LCP-AP40	120V Power	
P-1163	3/4"	2 - #12 AWG W 1#12 GND	RGS	LP-1-PLUMB	FS (RM 2207)	120V Power	Chemical Assay Emergency Shower Flow Switch
P-1164	3/4"	2 - #12 AWG W 1#12 GND	PVC COATED RGS	LP-1-PLUMB	FS (RM 2210)	120V Power	PACL Storage Room Emergency Shower Flow Switch
P-1165	3/4"	2 - #12 AWG W 1#12 GND	PVC COATED RGS	LP-1-PLUMB	FS (RM 2210)	120V Power	Future Chemical Storage Room Emergency Shower Flow Switch
P-1166	3/4"	2 - #12 AWG W 1#12 GND	PVC SCHEDULE 80	LP-1-PLUMB	FS (RM 2212)	120V Power	Exterior Chemical Delivery Emergency Shower Flow Switch

CABLE AND CONDUIT SCHEDULE - WEST PARISH WTF							
CONDUIT NO.	SIZE	CABLE & SIZE	CONDUIT TYPE	FROM	TO	PURPOSE	REMARKS
P-1167	3/4"	2 - #12 AWG W 1#12 GND	RGS	LP-1-PLUMB	FS (RM 2209)	120V Power	Chemical Corridor Emergency Shower Flow Switch (1)
P-1168	3/4"	2 - #12 AWG W 1#12 GND	RGS	LP-1-PLUMB	FS (RM 2209)	120V Power	Chemical Corridor Emergency Shower Flow Switch (2)
P-1169	3/4"	2 - #12 AWG W 1#12 GND	RGS	LP-1-PLUMB	FS (RM 2209)	120V Power	Chemical Corridor Emergency Shower Flow Switch (3)
P-1170	3/4"	2 - #12 AWG W 1#12 GND	PVC SCHEDULE 80	LP-1-PLUMB	FS (RM 2211)	120V Power	Hypochlorite Storage Room Emergency Shower Flow Switch (1)
P-1171	3/4"	2 - #12 AWG W 1#12 GND	PVC SCHEDULE 80	LP-1-PLUMB	FS (RM 2211)	120V Power	Hypochlorite Storage Room Emergency Shower Flow Switch (2)
P-1172	3/4"	2 - #12 AWG W 1#12 GND	PVC COATED RGS	LP-1-PLUMB	FS (RM 2213)	120V Power	Coagulant Polymer Storage Room Emergency Shower Flow Switch
P-1173	3/4"	2 - #12 AWG W 1#12 GND	PVC SCHEDULE 80	LP-1-PLUMB	FS (RM 2214)	120V Power	Phosphoric Acid Storage Room Emergency Shower Flow Switch
P-1174	3/4"	2 - #12 AWG W 1#12 GND	PVC SCHEDULE 80	LP-1-PLUMB	FS (RM 2215)	120V Power	Sodium Hydroxide Storage Room Emergency Shower Flow Switch
P-1175	3/4"	2 - #12 AWG W 1#12 GND	PVC COATED RGS	LP-1-PLUMB	FS (RM 2216)	120V Power	Filter Aid Polymer Storage Room

CABLE AND CONDUIT SCHEDULE - WEST PARISH WTF							
CONDUIT NO.	SIZE	CABLE & SIZE	CONDUIT TYPE	FROM	TO	PURPOSE	REMARKS
							Emergency Shower Flow Switch
P-1176	3/4"	2 - #12 AWG W 1#12 GND	RGS	LP-1-PLUMB	TP-01 (RM 2202)	120V Power	Workshop Corridor Electronic Trap Primer
P-1177	3/4"	2 - #12 AWG W 1#12 GND	RGS	LP-1-PLUMB	TP-02 (RM 2202)	120V Power	Workshop Electronic Trap Primer
P-1178	3/4"	2 - #12 AWG W 1#12 GND	RGS	LP-1-PLUMB	TP-02 (RM 2206)	120V Power	Process Area Restroom/JC Electronic Trap Primer
P-1179	1"	2 - #10 AWG W 1#10 GND	RGS	LP-1-PLUMB	RCP-05	120V Power	
P-1180	1"	2 - #10 AWG W 1#10 GND	RGS	LP-1-PLUMB	RCP-06	120V Power	
P-1181	1"	2 - #8 AWG W 1#10 GND	RGS	LP-1-PLUMB	WH-06	208V Power	
P-1182	1"	2 - #10 AWG W 1#10 GND	RGS	LP-1-PLUMB	DSW-EF-10	120V Power	
P-1183	1"	2 - #10 AWG W 1#10 GND	RGS	DSW-EF-10	EF-10	120V Power	
P-1184	3/4"	2 - #10 AWG W 1#12 GND	RGS	LP-1-PLUMB	LCS-EF-10	120V Power	
P-1185	1"	2 - #6 AWG W 1#10 GND	RGS	LP-LTG-471-TB	TB RECP - EL. 471.00	120V Power	
P-1186	1"	2 - #6 AWG W 1#10 GND	RGS	LP-LTG-471-TB	TB RECP - EL. 471.00	120V Power	
P-1187	1"	2 - #6 AWG W 1#10 GND	RGS	LP-LTG-471-TB	TB RECP - EL. 471.00	120V Power	
P-1188	1"	2 - #6 AWG W 1#10 GND	RGS	LP-LTG-471-TB	TB RECP - EL. 471.00	120V Power	

CABLE AND CONDUIT SCHEDULE - WEST PARISH WTF							
CONDUIT NO.	SIZE	CABLE & SIZE	CONDUIT TYPE	FROM	TO	PURPOSE	REMARKS
P-1189	1"	2 - #6 AWG W 1#10 GND	RGS	LP-LTG-471-TB	TB RECP - EL. 471.00	120V Power	
P-1190	1"	2 - #6 AWG W 1#10 GND	RGS	LP-LTG-471-TB	TB RECP - EL. 471.00	120V Power	
P-1191	1"	2 - #6 AWG W 1#10 GND	RGS	LP-LTG-471-TB	TB RECP - EL. 471.00	120V Power	
P-1192	1"	2 - #6 AWG W 1#10 GND	RGS	LP-LTG-471-TB	TB RECP - EL. 471.00	120V Power	
P-1193	3/4"	2 - #12 AWG W 1#12 GND	PVC COATED RGS	LP-LTG-471-TB	TB RECP - POLYALMNM CHLORIDE	120V Power	
P-1194	3/4"	2 - #12 AWG W 1#12 GND	PVC SCHEDULE 80	LP-LTG-471-TB	TB RECP - FUTURE/PHOS. ACID	120V Power	
P-1195	3/4"	2 - #12 AWG W 1#12 GND	PVC SCHEDULE 80	LP-LTG-471-TB	TB RECP - SODIUM HYDROXIDE	120V Power	
P-1196	3/4"	2 - #12 AWG W 1#12 GND	PVC SCHEDULE 80	LP-LTG-471-TB	TB RECP - SODIUM HYPOCHLORIT E	120V Power	
P-1197	3/4"	2 - #12 AWG W 1#12 GND	PVC COATED RGS	LP-LTG-471-TB	TB RECP - COAG POLY	120V Power	
P-1198	3/4"	2 - #12 AWG W 1#12 GND	PVC COATED RGS	LP-LTG-471-TB	TB RECP - FILTER AID POLYMER	120V Power	
P-1199	1"	2 - #6 AWG W 1#10 GND	RGS	LP-LTG-471-TB	TB LTG - WORKSHOP AND STORAGE	120V Power	

CABLE AND CONDUIT SCHEDULE - WEST PARISH WTF							
CONDUIT NO.	SIZE	CABLE & SIZE	CONDUIT TYPE	FROM	TO	PURPOSE	REMARKS
P-1200	1"	2 - #6 AWG W 1#10 GND	RGS	LP-LTG-471-TB	TB LTG - ELECTRICAL ROOM	120V Power	
P-1201	3/4"	2 - #10 AWG W 1#10 GND	RGS	LP-LTG-471-TB	TB LTG - EQUIPMENT PLATFORM, VIEWING PLATFORM	120V Power	
P-1202	3/4"	2 - #12 AWG W 1#12 GND	RGS	LP-LTG-471-TB	TB LTG - CORRIDOR	120V Power	
P-1203	3/4"	2 - #12 AWG W 1#12 GND	PVC SCHEDULE 80	LP-LTG-471-TB	TB LTG - FUTURE, PHOSPHORIC ACID	120V Power	
P-1204	3/4"	2 - #12 AWG W 1#12 GND	PVC COATED RGS	LP-LTG-471-TB	TB LTG - POLYALMNM CHLORIDE	120V Power	
P-1205	3/4"	2 - #12 AWG W 1#12 GND	PVC SCHEDULE 80	LP-LTG-471-TB	TB LTG - SODIUM HYPOCHLORIT E	120V Power	
P-1206	3/4"	2 - #12 AWG W 1#12 GND	PVC COATED RGS	LP-LTG-471-TB	TB LTG - FILTER AID POLYMER, COAG POLY	120V Power	
P-1207	3/4"	2 - #12 AWG W 1#12 GND	PVC SCHEDULE 80	LP-LTG-471-TB	TB LTG - SODIUM HYDROXIDE	120V Power	
P-1208	3/4"	2 - #10 AWG W 1#10 GND	RGS	LP-LTG-471-TB	TB LTG - FIRE SPINK, FLTR WTR	120V Power	

CABLE AND CONDUIT SCHEDULE - WEST PARISH WTF							
CONDUIT NO.	SIZE	CABLE & SIZE	CONDUIT TYPE	FROM	TO	PURPOSE	REMARKS
P-1209	1"	2 - #8 AWG W 1#10 GND	RGS	LP-LTG-471-TB	TB LTG - FLOC/DAF NORTH	120V Power	
P-1210	1"	2 - #8 AWG W 1#10 GND	RGS	LP-LTG-471-TB	TB LTG - FLOC/DAF NORTH	120V Power	
P-1211	1"	2 - #8 AWG W 1#10 GND	RGS	LP-LTG-471-TB	TB LTG - FLOC/DAF NORTH	120V Power	
P-1212	1"	2 - #8 AWG W 1#10 GND	RGS	LP-LTG-471-TB	TB LTG - FLOC/DAF NORTH	120V Power	
P-1213	1"	2 - #8 AWG W 1#10 GND	RGS	LP-LTG-471-TB	TB LTG - FLOC/DAF NORTH	120V Power	
P-1214	1"	2 - #8 AWG W 1#10 GND	RGS	LP-LTG-471-TB	TB LTG - FLOC/DAF NORTH	120V Power	
P-1215	1"	2 - #8 AWG W 1#10 GND	RGS	LP-LTG-471-TB	TB LTG - FLOC/DAF SOUTH	120V Power	
P-1216	1"	2 - #8 AWG W 1#10 GND	RGS	LP-LTG-471-TB	TB LTG - FLOC/DAF SOUTH	120V Power	
P-1217	1"	2 - #8 AWG W 1#10 GND	RGS	LP-LTG-471-TB	TB LTG - FLOC/DAF SOUTH	120V Power	
P-1218	1"	2 - #8 AWG W 1#10 GND	RGS	LP-LTG-471-TB	TB LTG - FLOC/DAF SOUTH	120V Power	
-	-	-	-	-	-	-	-

CABLE AND CONDUIT SCHEDULE - WEST PARISH WTF							
CONDUIT NO.	SIZE	CABLE & SIZE	CONDUIT TYPE	FROM	TO	PURPOSE	REMARKS
P-1220	1 1/2"	4 - #2 AWG W 1#8 GND	RGS	LP-485-TB	LP-2-SAMPLE-TB	208V Power	
P-1221	1 1/2"	4 - #2 AWG W 1#8 GND	RGS	LP-485-TB	LP-7-INSTR-TB	208V Power	
P-1222	1 1/2"	4 - #2 AWG W 1#8 GND	RGS	LP-485-TB	LP-1-HV-TB	208V Power	
P-1223	2"	4 - #2/0 AWG W 1#6 GND	RGS	LP-485-TB	LP-LTG-485-TB	208V Power	
P-1224	3/4"	2 - #12 AWG W 1#12 GND	RGS	LP-2-SAMPLE-TB	DSW-P-10320	230V Power	
P-1225	3/4"	2 - #12 AWG W 1#12 GND	RGS	DSW-P-10320	P-10320	230V Power	
P-1226	3/4"	2 - #12 AWG W 1#12 GND	RGS	LP-2-SAMPLE-TB	DSW-P-10340	230V Power	
P-1227	3/4"	2 - #12 AWG W 1#12 GND	RGS	DSW-P-10340	P-10340	230V Power	
P-1228	3/4"	2 - #12 AWG W 1#12 GND	RGS	LP-2-SAMPLE-TB	DSW-STR-33050	120V Power	
P-1229	3/4"	2 - #12 AWG W 1#12 GND	RGS	DSW-STR-33051	STR-33050	120V Power	
P-1230	3/4"	2 - #12 AWG W 1#12 GND	RGS	LP-2-SAMPLE-TB	T-34030	120V Power	
P-1231	3/4"	2 - #12 AWG W 1#12 GND	RGS	LP-2-SAMPLE-TB	T-34040	120V Power	
P-1232	3/4"	2 - #12 AWG W 1#12 GND	RGS	LP-7-INSTR-TB	FIT-34000	120V Power	
P-1233	3/4"	2 - #12 AWG W 1#12 GND	RGS	LP-7-INSTR-TB	FIT-45001	120V Power	
P-1234	3/4"	2 - #12 AWG W 1#12 GND	RGS	LP-7-INSTR-TB	FSL-10316	120V Power	
P-1235	3/4"	2 - #12 AWG W 1#12 GND	RGS	LP-7-INSTR-TB	FSL-10317	120V Power	

CABLE AND CONDUIT SCHEDULE - WEST PARISH WTF							
CONDUIT NO.	SIZE	CABLE & SIZE	CONDUIT TYPE	FROM	TO	PURPOSE	REMARKS
P-1236	3/4"	2 - #12 AWG W 1#12 GND	RGS	LP-7-INSTR-TB	RIO-DAF-A1	120V Power	
P-1237	3/4"	2 - #12 AWG W 1#12 GND	RGS	LP-7-INSTR-TB	RIO-DAF-B1	120V Power	
P-1238	3/4"	2 - #12 AWG W 1#12 GND	RGS	LP-7-INSTR-TB	RIO-DAF-A2	120V Power	
P-1239	3/4"	2 - #12 AWG W 1#12 GND	RGS	LP-7-INSTR-TB	RIO-DAF-B2	120V Power	
P-1240	3/4"	2 - #10 AWG W 1#10 GND	RGS	LP-7-INSTR-TB	RIO-FLT-A2	120V Power	
P-1241	3/4"	2 - #10 AWG W 1#10 GND	RGS	LP-7-INSTR-TB	RIO-FLT-B2	120V Power	
P-1242	3/4"	2 - #10 AWG W 1#10 GND	RGS	LP-7-INSTR-TB	RIO-MCC-2A	120V Power	
P-1243	3/4"	2 - #10 AWG W 1#10 GND	RGS	LP-7-INSTR-TB	RIO-MCC-2D	120V Power	
P-1244	3/4"	2 - #10 AWG W 1#10 GND	RGS	LP-7-INSTR-TB	DDC-02	120V Power	
P-1245	3/4"	2 - #12 AWG W 1#12 GND	RGS	LP-7-INSTR-TB	BMS-02	120V Power	
P-1246	3/4"	2 - #12 AWG W 1#12 GND	RGS	LP-7-INSTR-TB	LCS-EF-11	120V Power	
P-1247	3/4"	2 - #12 AWG W 1#12 GND	RGS	LP-7-INSTR-TB	DDC-03	120V Power	
P-1248	3/4"	2 - #10 AWG W 1#10 GND	RGS	LP-7-INSTR-TB	LCS-EF-01	120V Power	
P-1249	3/4"	2 - #10 AWG W 1#10 GND	RGS	LP-7-INSTR-TB	LCS-EF-03	120V Power	
P-1250	3/4"	2 - #10 AWG W 1#10 GND	RGS	LP-7-INSTR-TB	LCS-EF-05	120V Power	
P-1251	3/4"	2 - #10 AWG W 1#10 GND	RGS	LP-7-INSTR-TB	LCS-EF-08	120V Power	

CABLE AND CONDUIT SCHEDULE - WEST PARISH WTF							
CONDUIT NO.	SIZE	CABLE & SIZE	CONDUIT TYPE	FROM	TO	PURPOSE	REMARKS
P-1252	3/4"	2 - #10 AWG W 1#10 GND	RGS	LP-7-INSTR-TB	LCS-EF-09	120V Power	
P-1253	3/4"	2 - #10 AWG W 1#10 GND	RGS	LP-7-INSTR-TB	LCS-EF-07	120V Power	
P-1254	3/4"	2 - #12 AWG W 1#12 GND	RGS	LP-7-INSTR-TB	LCS-EF-12	120V Power	
P-1255	3/4"	2 - #12 AWG W 1#12 GND	RGS	LP-7-INSTR-TB	LCS-SF-01	120V Power	
P-1256	3/4"	2 - #10 AWG W 1#10 GND	RGS	LP-7-INSTR-TB	LCS-EF-02	120V Power	
P-1257	3/4"	2 - #10 AWG W 1#10 GND	RGS	LP-7-INSTR-TB	LCS-EF-04	120V Power	
P-1258	3/4"	2 - #10 AWG W 1#10 GND	RGS	LP-7-INSTR-TB	LCS-EF-06	120V Power	
P-1259	3/4"	2 - #10 AWG W 1#10 GND	RGS	LP-7-INSTR-TB	DDC-01	120V Power	
P-1259.1	3/4"	2 - #12 AWG W 1#12 GND	RGS	LP-7-INSTR-TB	OWS-DAF-A1	120V Power	
P-1259.2	3/4"	2 - #12 AWG W 1#12 GND	RGS	LP-7-INSTR-TB	OWS-DAF-B1	120V Power	
P-1259.3	3/4"	2 - #10 AWG W 1#10 GND	RGS	LP-7-INSTR-TB	OWS-FLT-A2	120V Power	
P-1259.4	3/4"	2 - #10 AWG W 1#10 GND	RGS	LP-7-INSTR-TB	OWS-FLT-B2	120V Power	
P-1259.5	3/4"	2 - #10 AWG W 1#10 GND	RGS	LP-7-INSTR-TB	OWS-BOP	120V Power	
P-1260	3/4"	2 - #10 AWG W 1#10 GND	RGS	LP-1-HV-TB	HV-1	120V Power	
P-1261	3/4"	2 - #10 AWG W 1#10 GND	RGS	LP-1-HV-TB	HV-2	120V Power	
P-1262	3/4"	2 - #10 AWG W 1#10 GND	RGS	LP-1-HV-TB	HV-3	120V Power	

CABLE AND CONDUIT SCHEDULE - WEST PARISH WTF							
CONDUIT NO.	SIZE	CABLE & SIZE	CONDUIT TYPE	FROM	TO	PURPOSE	REMARKS
P-1263	3/4"	2 - #12 AWG W 1#12 GND	RGS	LP-1-HV-TB	DSW-EF-11	120V Power	
P-1264	3/4"	2 - #12 AWG W 1#12 GND	RGS	DSW-EF-11	EF-11	120V Power	
P-1265	3/4"	2 - #12 AWG W 1#12 GND	RGS	LP-1-HV-TB	DSW-EF-12	120V Power	
P-1266	3/4"	2 - #12 AWG W 1#12 GND	RGS	DSW-EF-12	EF-12	120V Power	
P-1266.1	3/4"	2 - #10 AWG W 1#10 GND	RGS	LP-1-HV-TB	LCP-AP10	120V Power	
P-1266.2	3/4"	2 - #12 AWG W 1#12 GND	RGS	LP-1-HV-TB	LCP-AP15	120V Power	
P-1266.3	3/4"	2 - #12 AWG W 1#12 GND	RGS	LP-1-HV-TB	LCP-AP20	120V Power	
P-1266.4	3/4"	2 - #12 AWG W 1#12 GND	RGS	LP-1-HV-TB	LCP-AP25	120V Power	
P-1266.5	3/4"	2 - #10 AWG W 1#10 GND	RGS	LP-1-HV-TB	LCP-AP30	120V Power	
P-1267	1"	2 - #6 AWG W 1#10 GND	RGS	LP-LTG-485-TB	TB RECP - EL. 485.00	120V Power	
P-1268	1"	2 - #6 AWG W 1#10 GND	RGS	LP-LTG-485-TB	TB RECP - EL. 485.00	120V Power	
P-1269	1"	2 - #6 AWG W 1#10 GND	RGS	LP-LTG-485-TB	TB RECP - EL. 485.00	120V Power	
P-1270	1"	2 - #6 AWG W 1#10 GND	RGS	LP-LTG-485-TB	TB RECP - EL. 485.00	120V Power	
P-1271	1"	2 - #6 AWG W 1#10 GND	RGS	LP-LTG-485-TB	TB RECP - EL. 485.00	120V Power	
P-1272	1"	2 - #6 AWG W 1#10 GND	RGS	LP-LTG-485-TB	TB RECP - EL. 485.00	120V Power	
P-1273	1"	2 - #6 AWG W 1#10 GND	RGS	LP-LTG-485-TB	TB RECP - EL. 485.00	120V Power	

CABLE AND CONDUIT SCHEDULE - WEST PARISH WTF							
CONDUIT NO.	SIZE	CABLE & SIZE	CONDUIT TYPE	FROM	TO	PURPOSE	REMARKS
P-1274	1"	2 - #6 AWG W 1#10 GND	RGS	LP-LTG-485-TB	TB RECP - EL. 485.00	120V Power	
P-1275	1"	2 - #6 AWG W 1#10 GND	RGS	LP-LTG-485-TB	TB RECP - EL. 499.00	120V Power	
P-1276	1"	2 - #6 AWG W 1#10 GND	RGS	LP-LTG-485-TB	TB LTG - DAF OPERATING AREA	120V Power	
P-1277	1"	2 - #6 AWG W 1#10 GND	RGS	LP-LTG-485-TB	TB LTG - DAF OPERATING AREA	120V Power	
P-1278	1"	2 - #6 AWG W 1#10 GND	RGS	LP-LTG-485-TB	TB LTG - DAF OPERATING AREA	120V Power	
P-1279	1"	2 - #6 AWG W 1#10 GND	RGS	LP-LTG-485-TB	TB LTG - DAF OPERATING AREA	120V Power	
P-1280	3/4"	2 - #10 AWG W 1#10 GND	RGS	LP-LTG-485-TB	TB LTG - 485 ELECTRICAL RM	120V Power	
P-1281	1"	2 - #6 AWG W 1#10 GND	RGS	LP-LTG-485-TB	TB LTG - FILTER OPERATING AREA	120V Power	
P-1282	3/4"	2 - #10 AWG W 1#10 GND	RGS	LP-LTG-485-TB	TB LTG - CENTRAL OPERATING AREA	120V Power	
P-1283	3/4"	2 - #10 AWG W 1#10 GND	RGS	LP-LTG-485-TB	TB LTG - CENTRAL OPERATING AREA	120V Power	

CABLE AND CONDUIT SCHEDULE - WEST PARISH WTF							
CONDUIT NO.	SIZE	CABLE & SIZE	CONDUIT TYPE	FROM	TO	PURPOSE	REMARKS
P-1284	1"	2 - #6 AWG W 1#10 GND	RGS	LP-LTG-485-TB	TB LTG - FILTER OPERATING AREA	120V Power	
P-1285	1"	2 - #6 AWG W 1#10 GND	RGS	LP-LTG-485-TB	TB LTG - FILTER OPERATING AREA	120V Power	
P-1286	1"	2 - #6 AWG W 1#10 GND	RGS	LP-LTG-485-TB	TB LTG - FILTER OPERATING AREA	120V Power	
DWB & WWT C&C							
P-1287-A	5"	3 - #600 KCMIL W 1#3/0 GND	RGS	ATS-4A-DWB	MCC-4A	480V Power	
P-1287-B	5"	3 - #600 KCMIL W 1#3/0 GND	RGS	ATS-4A-DWB	MCC-4A	480V Power	
P-1287-C	5"	3 - #600 KCMIL W 1#3/0 GND	RGS	ATS-4A-DWB	MCC-4A	480V Power	
P-1288-A	5"	3 - #600 KCMIL W 1#3/0 GND	RGS	ATS-4B-DWB	MCC-4B	480V Power	
P-1288-B	5"	3 - #600 KCMIL W 1#3/0 GND	RGS	ATS-4B-DWB	MCC-4B	480V Power	
P-1288-C	5"	3 - #600 KCMIL W 1#3/0 GND	RGS	ATS-4B-DWB	MCC-4B	480V Power	

CABLE AND CONDUIT SCHEDULE - WEST PARISH WTF							
CONDUIT NO.	SIZE	CABLE & SIZE	CONDUIT TYPE	FROM	TO	PURPOSE	REMARKS
P-1289	3"	3 - #350 KCMIL W 1#4 GND	RGS	MCC-4A	CCP-60210	480V Power	
P-1290	3"	3 - #350 KCMIL W 1#4 GND	RGS	CCP-60210	CENT-60210 (MAIN DRIVE)	480V Power	
P-1291	3"	3 - #350 KCMIL W 1#4 GND	RGS	CCP-60210	CENT-60210 (BACK DRIVE/HPU)	480V Power	
P-1292	3/4"	3 - #12 AWG W 1#12 GND	RGS	MCC-4A	DSW-CONV-60300	480V Power	
P-1293	3/4"	3 - #12 AWG W 1#12 GND	RGS	DSW-CONV-60300	CONV-60300	480V Power	
P-1294	3/4"	3 - #8 AWG W 1#10 GND	RGS	MCC-4A	VFD-60140	480V Power	
P-1294.1	3/4"	3 - #8 AWG W 1#10 GND	RGS	VFD-60140	DSW-P-60140	480V Power	
P-1295	3/4"	3 - #8 AWG W 1#10 GND	RGS	DSW-P-60140	P-60140	480V Power	
P-1296	2"	3 - #3/0 AWG W 1#6 GND	RGS	MCC-4A	PANEL PP-1-DW	480V Power	
P-1297	3/4"	3 - #12 AWG W 1#12 GND	RGS	MCC-4A/VFD-EF-13	DSW-EF-13	480V Power	
P-1298	3/4"	3 - #12 AWG W 1#12 GND	RGS	DSW-EF-13	EF-13	480V Power	
P-1299	1 1/2"	3 - #2 AWG W 1#8 GND	PVC SCHEDULE 40	MCC-4A	VFD-46010	480V Power	
P-1299.1	1 1/2"	3 - #2 AWG W 1#8 GND	PVC COATED RGS	VFD-46010	DSW-P-46010	480V Power	

CABLE AND CONDUIT SCHEDULE - WEST PARISH WTF							
CONDUIT NO.	SIZE	CABLE & SIZE	CONDUIT TYPE	FROM	TO	PURPOSE	REMARKS
P-1300	1 1/2"	3 - #2 AWG W 1#8 GND	PVC COATED RGS	DSW-P-46010	P-46010	480V Power	
P-1301	1 1/2"	3 - #2 AWG W 1#8 GND	PVC SCHEDULE 40	MCC-4A	VFD-46030	480V Power	
P-1301.1	1 1/2"	3 - #2 AWG W 1#8 GND	PVC COATED RGS	VFD-46030	DSW-P-46030	480V Power	
P-1302	1 1/2"	3 - #2 AWG W 1#8 GND	PVC COATED RGS	DSW-P-46030	P-46030	480V Power	
P-1303	1"	3 - #10 AWG W 1#10 GND	PVC SCHEDULE 40	MCC-4A	DSW-MX-46050	480V Power	
P-1304	1"	3 - #10 AWG W 1#10 GND	PVC COATED RGS	DSW-MX-46050	MX-46050	480V Power	
P-1305	1"	3 - #10 AWG W 1#10 GND	PVC COATED RGS	MCC-4A/VFD-60510	DSW-P-60510	480V Power	
P-1306	3/4"	3 - #12 AWG W 1#12 GND	RGS	DSW-P-60510	P-60510	480V Power	
P-1307	3/4"	3 - #12 AWG W 1#12 GND	RGS	MCC-4A	DSW-MX-60130	480V Power	
P-1308	3/4"	3 - #12 AWG W 1#12 GND	RGS	DSW-MX-60130	MX-60130	480V Power	
P-1309	3"	3 - #500 KCMIL W 1#3 GND	RGS	MCC-4A	HV-04	480V Power	
P-1310	3/4"	3 - #12 AWG W 1#12 GND	RGS	MCC-4A	DSW-MX-60530	480V Power	

CABLE AND CONDUIT SCHEDULE - WEST PARISH WTF							
CONDUIT NO.	SIZE	CABLE & SIZE	CONDUIT TYPE	FROM	TO	PURPOSE	REMARKS
P-1311	3/4"	3 - #12 AWG W 1#12 GND	RGS	DSW-MX-60530	MX-60530	480V Power	
P-1312	3/4"	3 - #12 AWG W 1#12 GND	RGS	MCC-4A	DSW-WH-07	480V Power	
P-1313	3/4"	3 - #12 AWG W 1#12 GND	RGS	DSW-WH-06	WH-07	480V Power	
P-1314	3/4"	3 - #12 AWG W 1#12 GND	RGS	MCC-4A	DSW-EUH-57	480V Power	
P-1315	3/4"	3 - #12 AWG W 1#12 GND	RGS	DSW-EUH-57	EUH-57	480V Power	
P-1316	3/4"	3 - #12 AWG W 1#12 GND	RGS	MCC-4A	DSW-EUH-56	480V Power	
P-1317	3/4"	3 - #12 AWG W 1#12 GND	RGS	DSW-EUH-56	EUH-56	480V Power	
P-1318	3/4"	3 - #12 AWG W 1#12 GND	RGS	MCC-4A	DSW-EUH-55	480V Power	
P-1319	3/4"	3 - #12 AWG W 1#12 GND	RGS	DSW-EUH-55	EUH-55	480V Power	
P-1320	3/4"	3 - #12 AWG W 1#12 GND	RGS	MCC-4A	DSW-EUH-54	480V Power	
P-1321	3/4"	3 - #12 AWG W 1#12 GND	RGS	DSW-EUH-54	EUH-54	480V Power	
P-1322	2"	3 - #1 AWG W 1#6 GND	RGS	MCC-4A	TX-4A-LP-DW	480V Power	
P-1323	2"	4 - #3/0 AWG W 1#6 GND	RGS	TX-4A-LP-DW	LP-DW	208V Power	
P-1324	3"	3 - #350 KCMIL W 1#4 GND	RGS	MCC-4B	CCP-60220	480V Power	
P-1325	3"	3 - #350 KCMIL W 1#4 GND	RGS	CCP-60220	CENT-60220 (MAIN DRIVE)	480V Power	

CABLE AND CONDUIT SCHEDULE - WEST PARISH WTF							
CONDUIT NO.	SIZE	CABLE & SIZE	CONDUIT TYPE	FROM	TO	PURPOSE	REMARKS
P-1326	3"	3 - #350 KCMIL W 1#4 GND	RGS	CCP-60220	CENT-60220 (BACK DRIVE/HPU)	480V Power	
P-1327	1"	3 - #3 AWG W 1#8 GND	RGS	MCC-4B	DSW-CRANE-60230	480V Power	
P-1328	1"	3 - #3 AWG W 1#8 GND	RGS	DSW-CRANE-60230	CRANE-60230	480V Power	
P-1329	3/4"	3 - #12 AWG W 1#12 GND	RGS	MCC-4B	DSW-CONV-60310	480V Power	
P-1330	3/4"	3 - #12 AWG W 1#12 GND	RGS	DSW-CONV-60310	CONV-60310	480V Power	
P-1331	3/4"	3 - #12 AWG W 1#12 GND	RGS	MCC-4B	DSW-CONV-60320	480V Power	
P-1332	3/4"	3 - #12 AWG W 1#12 GND	RGS	DSW-CONV-60320	CONV-60320	480V Power	
P-1333	3/4"	3 - #8 AWG W 1#10 GND	RGS	MCC-4B	VFD-60160	480V Power	
P-1333.1	3/4"	3 - #8 AWG W 1#10 GND	RGS	VFD-60160	DSW-P-60160	480V Power	
P-1334	3/4"	3 - #8 AWG W 1#10 GND	RGS	DSW-P-60160	P-60160	480V Power	
P-1335	1 1/2"	3 - #2 AWG W 1#8 GND	PVC SCHEDULE 40	MCC-4B	VFD-46020	480V Power	
P-1335.1	1 1/2"	3 - #2 AWG W 1#8 GND	PVC COATED RGS	VFD-46020	DSW-P-46020	480V Power	
P-1336	1 1/2"	3 - #2 AWG W 1#8 GND	PVC COATED RGS	DSW-P-46020	P-46020	480V Power	

CABLE AND CONDUIT SCHEDULE - WEST PARISH WTF							
CONDUIT NO.	SIZE	CABLE & SIZE	CONDUIT TYPE	FROM	TO	PURPOSE	REMARKS
P-1337	1 1/2"	3 - #2 AWG W 1#8 GND	PVC SCHEDULE 40	MCC-4B	VFD-46040	480V Power	
P-1337.1	1 1/2"	3 - #2 AWG W 1#8 GND	PVC COATED RGS	VFD-46040	DSW-P-46040	480V Power	
P-1338	1 1/2"	3 - #2 AWG W 1#8 GND	PVC COATED RGS	DSW-P-46040	P-46040	480V Power	
P-1339	1"	3 - #10 AWG W 1#10 GND	PVC SCHEDULE 40	MCC-4B	DSW-MX-46060	480V Power	
P-1340	1"	3 - #10 AWG W 1#10 GND	PVC COATED RGS	DSW-MX-46060	MX-46060	480V Power	
P-1341	1"	3 - #10 AWG W 1#10 GND	PVC COATED RGS	MCC-4B/VFD-60520	DSW-P-60520	480V Power	
P-1342	3/4"	3 - #12 AWG W 1#12 GND	RGS	DSW-P-60520	P-60520	480V Power	
P-1343	3/4"	3 - #12 AWG W 1#12 GND	RGS	MCC-4B	DSW-MX-60150	480V Power	
P-1344	3/4"	3 - #12 AWG W 1#12 GND	RGS	DSW-MX-60150	MX-60150	480V Power	
P-1345	3/4"	3 - #12 AWG W 1#12 GND	RGS	MCC-4B/VFD-EF-14	DSW-EF-14	480V Power	
P-1346	3/4"	3 - #12 AWG W 1#12 GND	RGS	DSW-EF-14	EF-14	480V Power	
P-1347	3/4"	3 - #12 AWG W 1#12 GND	RGS	MCC-4B	DSW-MX-60540	480V Power	
P-1348	3/4"	3 - #12 AWG W 1#12 GND	RGS	DSW-MX-60540	MX-60540	480V Power	

CABLE AND CONDUIT SCHEDULE - WEST PARISH WTF							
CONDUIT NO.	SIZE	CABLE & SIZE	CONDUIT TYPE	FROM	TO	PURPOSE	REMARKS
P-1349	3/4"	3 - #12 AWG W 1#12 GND	RGS	MCC-4B	DSW-EUH-58	480V Power	
P-1350	3/4"	3 - #12 AWG W 1#12 GND	RGS	DSW-EUH-58	EUH-58	480V Power	
P-1351	3/4"	3 - #12 AWG W 1#12 GND	RGS	MCC-4B	DSW-EUH-59	480V Power	
P-1352	3/4"	3 - #12 AWG W 1#12 GND	RGS	DSW-EUH-59	EUH-59	480V Power	
P-1353	3/4"	3 - #12 AWG W 1#12 GND	RGS	MCC-4B	DSW-EUH-60	480V Power	
P-1354	3/4"	3 - #12 AWG W 1#12 GND	RGS	DSW-EUH-60	EUH-60	480V Power	
P-1355	1 1/2"	3 - #1/0 AWG W 1#6 GND	RGS	MCC-4B	DSW-WH-09	480V Power	
P-1356	1 1/2"	3 - #1/0 AWG W 1#6 GND	RGS	DSW-WH-09	WH-09	480V Power	
P-1357	2"	3 - #3/0 AWG W 1#6 GND	RGS	MCC-4B	PANEL PP-1-DW	480V Power	
P-1358	2"	3 - #1 AWG W 1#6 GND	RGS	MCC-4B	TX-4B-LP-DW	480V Power	
P-1359	2"	4 - #3/0 AWG W 1#6 GND	RGS	TX-4B-LP-DW	LP-DW	208V Power	
P-1360	3/4"	3 - #12 AWG W 1#12 GND	RGS	MCC-4B	DSW-SP-02	480V Power	
P-1361	3/4"	3 - #12 AWG W 1#12 GND	RGS	DSW-SP-02	SP-02	480V Power	
P-1362	3/4"	3 - #8 AWG W 1#10 GND	RGS	MCC-4B	DSW-VRF-06	480V Power	
P-1363	3/4"	3 - #8 AWG W 1#10 GND	RGS	DSW-VRF-06	VRF-06	480V Power	
P-1364	3/4"	3 - #12 AWG W 1#12 GND	RGS	PP-1-DW	DSW-MOV-60115	480V Power	

CABLE AND CONDUIT SCHEDULE - WEST PARISH WTF							
CONDUIT NO.	SIZE	CABLE & SIZE	CONDUIT TYPE	FROM	TO	PURPOSE	REMARKS
P-1365	3/4"	3 - #12 AWG W 1#12 GND	RGS	DSW-MOV-60115	MOV-60115	480V Power	
P-1366	3/4"	3 - #12 AWG W 1#12 GND	RGS	PP-1-DW	DSW-MOV-60125	480V Power	
P-1367	3/4"	3 - #12 AWG W 1#12 GND	RGS	DSW-MOV-60125	MOV-60125	480V Power	
P-1368	3/4"	3 - #12 AWG W 1#12 GND	RGS	PP-1-DW	ROLL-UP-DOOR (DWB - WEST SIDE)	480V Power	
P-1369	3/4"	3 - #12 AWG W 1#12 GND	RGS	PP-1-DW	ROLL-UP-DOOR (DWB - WEST SIDE)	480V Power	
P-1370	3/4"	3 - #8 AWG W 1#10 GND	RGS	PP-1-DW	LCP-60300	480V Power	
P-1371	3/4"	3 - #12 AWG W 1#12 GND	RGS	PP-1-DW	DSW-MOV-60311	480V Power	
P-1372	3/4"	3 - #12 AWG W 1#12 GND	RGS	DSW-MOV-60311	MOV-60311	480V Power	
P-1373	3/4"	3 - #12 AWG W 1#12 GND	RGS	PP-1-DW	DSW-MOV-60312	480V Power	
P-1374	3/4"	3 - #12 AWG W 1#12 GND	RGS	DSW-MOV-60312	MOV-60312	480V Power	
P-1375	3/4"	3 - #12 AWG W 1#12 GND	RGS	PP-1-DW	DSW-MOV-60321	480V Power	
P-1376	3/4"	3 - #12 AWG W 1#12 GND	RGS	DSW-MOV-60321	MOV-60321	480V Power	
P-1377	3/4"	3 - #12 AWG W 1#12 GND	RGS	PP-1-DW	DSW-MOV-60322	480V Power	
P-1378	3/4"	3 - #12 AWG W 1#12 GND	RGS	DSW-MOV-60322	MOV-60322	480V Power	

CABLE AND CONDUIT SCHEDULE - WEST PARISH WTF							
CONDUIT NO.	SIZE	CABLE & SIZE	CONDUIT TYPE	FROM	TO	PURPOSE	REMARKS
P-1379	3/4"	3 - #12 AWG W 1#12 GND	RGS	PP-1-DW	CENT-60211 (DIVERTER GATE 1)	480V Power	
P-1380	3/4"	3 - #12 AWG W 1#12 GND	RGS	PP-1-DW	CENT-60212 (DIVERTER GATE 2)	480V Power	
P-1381	1 1/2"	4 - #2 AWG W 1#8 GND	RGS	LP-DW	LP-1-DW	208V Power	
P-1382	1 1/2"	4 - #2 AWG W 1#8 GND	RGS	LP-DW	LP-2-DW	208V Power	
P-1383	1 1/2"	4 - #2 AWG W 1#8 GND	RGS	LP-DW	LP-3-DW	208V Power	
P-1385	1 1/2"	4 - #2 AWG W 1#8 GND	RGS	LP-DW	LP-INSTR-DW	208V Power	
P-1385.1	1 1/2"	3 - #2 AWG W 1#8 GND	RGS	LP-DW	TX-3-DW	208V Power	
P-1385.2	1 1/2"	3 - #2 AWG W 1#8 GND	RGS	TX-3-DW	UPS-EMER-1-DW	240V Power	
P-1385.3	1 1/2"	3 - #2 AWG W 1#8 GND	RGS	UPS-EMER-1-DW	LP-UPS-EMER-1-DW	240V Power	
P-1386	3/4"	2 - #12 AWG W 1#12 GND	RGS	LP-1-DW	DSW-MX-60425	120V Power	
P-1387	3/4"	2 - #12 AWG W 1#12 GND	RGS	DSW-MX-60425	MX-60425	120V Power	
P-1388	3/4"	2 - #12 AWG W 1#12 GND	RGS	LP-1-DW	DSW-MX-60465	120V Power	
P-1389	3/4"	2 - #12 AWG W 1#12 GND	RGS	DSW-MX-60465	MX-60465	120V Power	
P-1390	3/4"	2 - #8 AWG W 1#10 GND	RGS	LP-1-DW	DSW-SKID-60430	120V Power	
P-1391	3/4"	2 - #8 AWG W 1#10 GND	RGS	DSW-SKID-60430	SKID-60430	120V Power	

CABLE AND CONDUIT SCHEDULE - WEST PARISH WTF							
CONDUIT NO.	SIZE	CABLE & SIZE	CONDUIT TYPE	FROM	TO	PURPOSE	REMARKS
P-1392	3/4"	2 - #8 AWG W 1#10 GND	RGS	LP-1-DW	DSW-SKID-60470 (STANDBY)	120V Power	
P-1393	3/4"	2 - #8 AWG W 1#10 GND	RGS	DSW-SKID-60470 (STANDBY)	SKID-60470 (STANDBY)	120V Power	
P-1394	3/4"	2 - #12 AWG W 1#12 GND	RGS	LP-1-DW	DSW-P-60410	120V Power	
P-1395	3/4"	2 - #12 AWG W 1#12 GND	RGS	DSW-P-60410	P-60410	120V Power	
P-1396	3/4"	2 - #12 AWG W 1#12 GND	RGS	LP-1-DW	DSW-P-60450 (STANDBY)	120V Power	
P-1397	3/4"	2 - #12 AWG W 1#12 GND	RGS	DSW-P-60450 (STANDBY)	P-60450 (STANDBY)	120V Power	
P-1398	3/4"	2 - #12 AWG W 1#12 GND	RGS	LP-1-DW	WE-60421	120V Power	
P-1399	3/4"	2 - #12 AWG W 1#12 GND	RGS	LP-1-DW	WE-60461	120V Power	
P-1400	3/4"	2 - #10 AWG W 1#10 GND	RGS	LP-1-DW	CCP-60210	120V Power	
P-1401	3/4"	2 - #10 AWG W 1#10 GND	RGS	LP-1-DW	CCP-60220 (STANDBY)	120V Power	
P-1402	3/4"	3 - #12 AWG W 1#12 GND	RGS	LP-1-DW	SOV-60302	120V Power	
P-1403	3/4"	3 - #12 AWG W 1#12 GND	RGS	LP-1-DW	SOV-60303	120V Power	
P-1404	3/4"	3 - #12 AWG W 1#12 GND	RGS	LP-1-DW	SOV-60304	120V Power	
P-1405	3/4"	3 - #12 AWG W 1#12 GND	RGS	LP-1-DW	SOV-60322	120V Power	
P-1406	3/4"	3 - #12 AWG W 1#12 GND	RGS	LP-1-DW	SOV-60323	120V Power	

CABLE AND CONDUIT SCHEDULE - WEST PARISH WTF							
CONDUIT NO.	SIZE	CABLE & SIZE	CONDUIT TYPE	FROM	TO	PURPOSE	REMARKS
P-1407	3/4"	3 - #12 AWG W 1#12 GND	RGS	LP-1-DW	SOV-60324	120V Power	
P-1408	3/4"	3 - #12 AWG W 1#12 GND	RGS	LP-2-DW	FCU-57	208V Power	
P-1409	3/4"	3 - #12 AWG W 1#12 GND	RGS	LP-2-DW	FCU-58	208V Power	
P-1410	3/4"	3 - #12 AWG W 1#12 GND	RGS	LP-2-DW	FCU-59	208V Power	
P-1411	3/4"	3 - #12 AWG W 1#12 GND	RGS	LP-2-DW	FCU-60	208V Power	
P-1412	3/4"	3 - #12 AWG W 1#12 GND	RGS	LP-2-DW	FCU-61	208V Power	
P-1413	3/4"	3 - #12 AWG W 1#12 GND	RGS	LP-2-DW	FCU-56	208V Power	
P-1414	3/4"	3 - #12 AWG W 1#12 GND	RGS	LP-2-DW	BC-06	208V Power	
P-1415	3/4"	3 - #12 AWG W 1#12 GND	RGS	LP-2-DW	RCP-06	120V Power	
P-1416	3/4"	3 - #12 AWG W 1#12 GND	RGS	LP-2-DW	RCP-07	120V Power	
P-1417	3/4"	3 - #12 AWG W 1#12 GND	RGS	LP-2-DW	HV-4	120V Power	
P-1418	3/4"	3 - #12 AWG W 1#12 GND	RGS	LP-2-DW	TP-02	120V Power	DWB Electronic Trap Primer
P-1419	3/4"	2 - #10 AWG W 1#10 GND	RGS	LP-2-DW	DSW-WH-08	208V Power	
P-1420	3/4"	2 - #8 AWG W 1#10 GND	RGS	DSW-WH-08	WH-08	208V Power	
P-1421	3/4"	2 - #8 AWG W 1#10 GND	RGS	LP-2-DW	DSW-EF-15	120V Power	
P-1422	3/4"	2 - #12 AWG W 1#12 GND	RGS	DSW-EF-15	EF-15	120V Power	

CABLE AND CONDUIT SCHEDULE - WEST PARISH WTF							
CONDUIT NO.	SIZE	CABLE & SIZE	CONDUIT TYPE	FROM	TO	PURPOSE	REMARKS
P-1423	3/4"	2 - #12 AWG W 1#12 GND	RGS	LP-2-DW	DSW-EF-16	120V Power	
P-1424	3/4"	2 - #12 AWG W 1#12 GND	RGS	DSW-EF-16	EF-16	120V Power	
P-1425	3/4"	2 - #12 AWG W 1#12 GND	RGS	LP-2-DW	LCS-EF-13	120V Power	
P-1426	3/4"	2 - #12 AWG W 1#12 GND	RGS	LP-2-DW	LCS-EF-14	120V Power	
P-1427	3/4"	2 - #12 AWG W 1#12 GND	RGS	LP-2-DW	LCS-EF-16	120V Power	
P-1428	3/4"	2 - #12 AWG W 1#12 GND	RGS	LP-2-DW	DDC-14	120V Power	
P-1429	3/4"	2 - #12 AWG W 1#12 GND	RGS	LP-2-DW	DDC-08	120V Power	
P-1430	3/4"	2 - #12 AWG W 1#12 GND	RGS	LP-2-DW	LCS-EF-15	120V Power	
P-1430.1	3/4"	2 - #12 AWG W 1#12 GND	RGS	LP-2-DW	FS (ROOM 3201)	120V Power	Dewatering Polymer Storage Room Emergency Shower Flow Switch
P-1430.2	3/4"	2 - #12 AWG W 1#12 GND	RGS	LP-2-DW	FS (ROOM 3305)	120V Power	DWB Sample Room Emergency Eyewash Flow Switch
P-1431	3/4"	2 - #10 AWG W 1#10 GND	RGS	LP-3-DW	DWB RECP - EL. 450.00	120V Power	
P-1432	1"	2 - #6 AWG W 1#10 GND	RGS	LP-3-DW	DWB RECP - EL. 464.50	120V Power	
P-1433	3/4"	2 - #10 AWG W 1#10 GND	RGS	LP-3-DW	DWB RECP - EL. 484.50	120V Power	

CABLE AND CONDUIT SCHEDULE - WEST PARISH WTF							
CONDUIT NO.	SIZE	CABLE & SIZE	CONDUIT TYPE	FROM	TO	PURPOSE	REMARKS
P-1434	3/4"	2 - #10 AWG W 1#10 GND	RGS	LP-3-DW	DWB RECP - EL. 450.00	120V Power	
P-1435	1"	2 - #6 AWG W 1#10 GND	RGS	LP-3-DW	DWB RECP - EL. 464.50	120V Power	
P-1436	3/4"	2 - #10 AWG W 1#10 GND	RGS	LP-3-DW	DWB RECP - EL. 484.50	120V Power	
P-1437	3/4"	2 - #10 AWG W 1#10 GND	RGS	LP-3-DW	DWB LTG - SOLIDS REMOVAL	120V Power	
P-1438	3/4"	2 - #12 AWG W 1#12 GND	RGS	LP-3-DW	DWB LTG - PUMP ROOM	120V Power	
P-1439	3/4"	2 - #12 AWG W 1#12 GND	RGS	LP-3-DW	DWB LTG - POLYMER ROOM	120V Power	
-	-	-	-	-	-	-	-
P-1441	3/4"	2 - #12 AWG W 1#12 GND	RGS	LP-3-DW	DWB LTG - RESTROOM	120V Power	
P-1442	3/4"	2 - #10 AWG W 1#10 GND	RGS	LP-3-DW	DWB LTG - EXTERIOR	120V Power	
P-1443	3/4"	2 - #12 AWG W 1#12 GND	RGS	LP-3-DW	DWB LTG - CENT ROOM	120V Power	
P-1444	3/4"	2 - #12 AWG W 1#12 GND	RGS	LP-3-DW	DWB LTG - ELEC ROOM	120V Power	
P-1445	3/4"	2 - #12 AWG W 1#12 GND	RGS	LP-3-DW	DWB LTG - JANITOR & SAMPLE ROOMS	120V Power	
P-1446	3/4"	2 - #12 AWG W 1#12 GND	RGS	LP-3-DW	DWB LTG - CONTROL ROOM	120V Power	

CABLE AND CONDUIT SCHEDULE - WEST PARISH WTF							
CONDUIT NO.	SIZE	CABLE & SIZE	CONDUIT TYPE	FROM	TO	PURPOSE	REMARKS
P-1446.1	3/4"	2 - #12 AWG W 1#12 GND	RGS	LP-3-DW	DWB RECP - CONTROL ROOM	120V Power	
P-1446.2	3/4"	2 - #10 AWG W 1#10 GND	RGS	LP-3-DW	DWB RECP - CONTROL ROOM	120V Power	
P-1446.3	3/4"	2 - #12 AWG W 1#12 GND	RGS	LP-3-DW	DWB RECP - CTRL AND I&C RMS	120V Power	
P-1446.4	1"	2 - #10 AWG W 1#10 GND	PVC SCHEDULE 40	LP-3-DW	WAST WASHWATER TANK - REC	120V Power	
P-1446.5	1"	2 - #10 AWG W 1#10 GND	PVC SCHEDULE 40	LP-3-DW	WAST WASHWATER TANK - LTG	120V Power	
P-1447	3/4"	2 - #12 AWG W 1#12 GND	RGS	LP-INSTR-DW	TSH-60140	120V Power	
P-1448	3/4"	2 - #12 AWG W 1#12 GND	RGS	LP-INSTR-DW	TSH-60160	120V Power	
P-1449	3/4"	2 - #12 AWG W 1#12 GND	RGS	LP-INSTR-DW	FIT-60201	120V Power	
P-1450	3/4"	2 - #12 AWG W 1#12 GND	RGS	LP-INSTR-DW	FIT-60202	120V Power	
P-1451	3/4"	2 - #12 AWG W 1#12 GND	RGS	LP-INSTR-DW	FIT-60301	120V Power	
P-1452	3/4"	2 - #12 AWG W 1#12 GND	RGS	LP-INSTR-DW	FIT-60401	120V Power	
P-1453	3/4"	2 - #12 AWG W 1#12 GND	RGS	LP-INSTR-DW	LCS-60425	120V Power	
P-1454	3/4"	2 - #12 AWG W 1#12 GND	RGS	LP-INSTR-DW	LCS-60465	120V Power	

CABLE AND CONDUIT SCHEDULE - WEST PARISH WTF							
CONDUIT NO.	SIZE	CABLE & SIZE	CONDUIT TYPE	FROM	TO	PURPOSE	REMARKS
P-1455	3/4"	2 - #12 AWG W 1#12 GND	RGS	LP-INSTR-DW	WIT-60421	120V Power	
P-1456	3/4"	2 - #12 AWG W 1#12 GND	RGS	LP-INSTR-DW	WIT-60461	120V Power	
P-1457	3/4"	2 - #12 AWG W 1#12 GND	RGS	LP-INSTR-DW	LCP-60430	120V Power	
P-1458	3/4"	2 - #12 AWG W 1#12 GND	RGS	LP-INSTR-DW	LCP-60470	120V Power	
P-1459	3/4"	2 - #12 AWG W 1#12 GND	RGS	LP-INSTR-DW	RIO-RESIDUALS	120V Power	
P-1460	3/4"	2 - #12 AWG W 1#12 GND	RGS	LP-INSTR-DW	AIT-60203	120V Power	
P-1461	3/4"	2 - #12 AWG W 1#12 GND	RGS	LP-INSTR-DW	AIT-60204	120V Power	
P-1461.1	3/4"	2 - #12 AWG W 1#12 GND	RGS	LP-INSTR-DW	LCP-AP65	120V Power	
P-1461.2	3/4"	2 - #12 AWG W 1#12 GND	RGS	LP-INSTR-DW	LCP-AP70	120V Power	
P-1461.3	3/4"	2 - #12 AWG W 1#12 GND	RGS	LP-INSTR-DW	OWP-RESID	120V Power	
P-1462	3/4"	2 - #10 AWG W 1#10 GND	RGS	LP-UPS-EMER-1-DW	EM/EXIT LTG - EL. 450.00, STAIR A	120V Power	
P-1463	3/4"	2 - #12 AWG W 1#12 GND	RGS	LP-UPS-EMER-1-DW	EM/EXIT LTG - EL. 464.50	120V Power	
P-1464	3/4"	2 - #12 AWG W 1#12 GND	RGS	LP-UPS-EMER-1-DW	EM/EXIT LTG - EL. 484.50	120V Power	
P-1465	3/4"	2 - #10 AWG W 1#10 GND	RGS	LP-UPS-EMER-1-DW	DWB LTG - EXTERIOR	120V Power	
P-1466	3/4"	2 - #10 AWG W 1#10 GND	RGS	LP-UPS-EMER-1-DW	ACP-DW	120V Power	

CABLE AND CONDUIT SCHEDULE - WEST PARISH WTF							
CONDUIT NO.	SIZE	CABLE & SIZE	CONDUIT TYPE	FROM	TO	PURPOSE	REMARKS
BACKWASH FACILITY C&C							
P-1467	3/4"	2 - #12 AWG W 1#12 GND	RGS	PANEL LP1 (EXISTING PANEL)	FCV-81040	120V Power	
P-1468	3/4"	2 - #12 AWG W 1#12 GND	RGS	PANEL LP1 (EXISTING PANEL)	MOV-81050	120V Power	
P-1469	3/4"	2 - #12 AWG W 1#12 GND	RGS	PANEL LP1 (EXISTING PANEL)	FCV-81060	120V Power	
P-1470	3/4"	2 - #12 AWG W 1#12 GND	RGS	PANEL LP1 (EXISTING PANEL)	FIT-81060	120V Power	
P-1471	3/4"	2 - #12 AWG W 1#12 GND	RGS	PANEL LP1 (EXISTING PANEL)	LCP-70360	120V Power	
P-1472	3/4"	2 - #12 AWG W 1#12 GND	RGS	PANEL LP1 (EXISTING PANEL)	LCP-70370	120V Power	
P-1473	3/4"	2 - #12 AWG W 1#12 GND	RGS	PANEL LP1 (EXISTING PANEL)	P-70360	120V Power	
P-1474	3/4"	2 - #12 AWG W 1#12 GND	RGS	PANEL LP1 (EXISTING PANEL)	P-70370	120V Power	
P-1475	3/4"	2 - #12 AWG W 1#12 GND	RGS	PANEL LP1 (EXISTING PANEL)	WIT-70352	120V Power	

CABLE AND CONDUIT SCHEDULE - WEST PARISH WTF						
CONDUIT NO.	SIZE	CABLE	CONDUIT TYPE	FROM	TO	REMARKS
OUTDOOR C&C						
C-001	4"	SINGLE MODE FIBER	PVC SCHEDULE 40	SWGR-02-A	ATS-1A	

CABLE AND CONDUIT SCHEDULE - WEST PARISH WTF						
CONDUIT NO.	SIZE	CABLE	CONDUIT TYPE	FROM	TO	REMARKS
C-002	4"	SINGLE MODE FIBER	PVC SCHEDULE 40	RAPID SAND FILTER BUILDING	ADMIN BUILDING	
C-003	1"	SINGLE MODE FIBER	PVC SCHEDULE 40	DDC-12	SLS-01	REFER TO H-DRAWINGS (DWG H-003) FOR BLOCK DIAGRAMS
C-004	1"	SINGLE MODE FIBER	PVC SCHEDULE 40	DDC-15	SLS-02	REFER TO H-DRAWINGS (DWG H-003) FOR BLOCK DIAGRAMS
C-005	4"	SINGLE MODE FIBER	PVC SCHEDULE 40	EXISTING POLE	ADMIN BUILDING (CONTROL ROOM)	VIA HH #1A
C-006	1"	SINGLE MODE FIBER	PVC SCHEDULE 40	ADMIN BUILDING	GATE 3	VIA HH #1C
C-006.1	1"	SINGLE MODE FIBER	PVC SCHEDULE 40	ADMIN BUILDING	GATE 4	
C-007	1"	SINGLE MODE FIBER	PVC SCHEDULE 40	ADMIN BUILDING	GATE 2	VIA HH #1C
C-008	2"	SINGLE MODE FIBER	PVC SCHEDULE 40	DEWATERING BUILDING	WASTE WASHWATER TANK (WWT)	VIA DB-24 (C-578, C-582, C-586, C-587, C-588, C-589, C-590, C-592, C-593, C-596)
C-DB-25-SPARE-A	2"	SPARE	PVC SCHEDULE 40	DEWATERING BUILDING	WASTE WASHWATER TANK (WWT)	
C-DWB-ATS-A	2"	SINGLE MODE FIBER	PVC SCHEDULE 40	SWGR-01	ATS-4A-DWB	
C-DWB-ATS-B	2"	SINGLE MODE FIBER	PVC SCHEDULE 40	SWGR-01	ATS-4B-DWB	

CABLE AND CONDUIT SCHEDULE - WEST PARISH WTF						
CONDUIT NO.	SIZE	CABLE	CONDUIT TYPE	FROM	TO	REMARKS
C-DB-10A-SPARE-A	4"	SPARE	PVC SCHEDULE 40	SWGR-02-A	ATS-1A	
C-DB-14-SPARE-A	4"	SPARE	PVC SCHEDULE 40	ADMIN BUILDING	RAPID SAND FILTER BUILDING	
C-DB-18-SPARE-A	4"	SPARE	PVC SCHEDULE 40	EXISTING POLE	ADMIN BUILDING	
ADMIN C&C						
C-009	1"	CAT6 CABLE	RGS	NETWORK SERVER RACK	PLC-TRAIN-A	
C-010	1"	CAT6 CABLE	RGS	NETWORK SERVER RACK	PLC-TRAIN-B	
C-011	1"	CAT6 CABLE	RGS	NETWORK SERVER RACK	PLC-BOP	
C-012	1"	SINGLE MODE FIBER	RGS	NETWORK SERVER RACK	RIO-WQSB	
C-013	1"	SINGLE MODE FIBER	RGS	NETWORK SERVER RACK	RIO-WQTH	
C-014	1"	SINGLE MODE FIBER	RGS	NETWORK SERVER RACK	CENT-PLC-001	
C-015	1"	SINGLE MODE FIBER	RGS	NETWORK SERVER RACK	CENT-PLC-002	
C-016	1"	SINGLE MODE FIBER	RGS	NETWORK SERVER RACK	EDV-CP	

CABLE AND CONDUIT SCHEDULE - WEST PARISH WTF						
CONDUIT NO.	SIZE	CABLE	CONDUIT TYPE	FROM	TO	REMARKS
C-017	1"	SINGLE MODE FIBER	RGS	NETWORK SERVER RACK	CLEARWELL-CP	
C-018	1"	SINGLE MODE FIBER	RGS	NETWORK SERVER RACK	EXISTING SCADA SYSTEM FAST SAND FILTER BUILDING	
C-019	1"	SINGLE MODE FIBER	RGS	NETWORK SERVER RACK	OWS-BOP	
C-020	3/4"	2 #14	RGS	RIO-DAF-B2	FIRE ALARM PANEL	XA-70410
C-021	3/4"	2 #14	RGS	RIO-DAF-B2	HVAC CONTROL PANEL	XA-TBD
C-022	3/4"	2 #14	RGS	RIO-DAF-B2	FSH-70001	FAH-70001
C-023	1"	2 #14	PVC SCHEDULE 40	LCS-70740	LSH-70742	VIA HH #2A
C-024	3/4"	2 #14	RGS	DOAS-01 VCP	FACP	REFER TO H-DRAWINGS (DWG H-003) FOR BLOCK DIAGRAMS
C-025	3/4"	2 #14	RGS	DDC-05	FACP	REFER TO H-DRAWINGS (DWG H-003) FOR BLOCK DIAGRAMS
C-026	3/4"	2 #14	RGS	DOAS-02 VCP	FACP	REFER TO H-DRAWINGS (DWG H-003) FOR BLOCK DIAGRAMS
C-027	3/4"	2 #14	RGS	DDC-06	FACP	REFER TO H-DRAWINGS (DWG H-003) FOR BLOCK DIAGRAMS
C-028	3/4"	8 #14	RGS	DDC-05	EF-17	REFER TO H-DRAWINGS (DWG H-003) FOR BLOCK DIAGRAMS
C-029	3/4"	8 #14	RGS	DDC-06	EF-18	REFER TO H-DRAWINGS (DWG H-003) FOR BLOCK DIAGRAMS
C-030	3/4"	CAT6 CABLE	RGS	DDC-11	VFD-CWP-01	REFER TO H-DRAWINGS (DWG H-003) FOR BLOCK DIAGRAMS
C-031	3/4"	CAT6 CABLE	RGS	DDC-11	VFD-CWP-02	REFER TO H-DRAWINGS (DWG H-003) FOR BLOCK DIAGRAMS

CABLE AND CONDUIT SCHEDULE - WEST PARISH WTF						
CONDUIT NO.	SIZE	CABLE	CONDUIT TYPE	FROM	TO	REMARKS
C-032	3/4"	CAT6 CABLE	RGS	DDC-06	VFD-EF-19	REFER TO H-DRAWINGS (DWG H-003) FOR BLOCK DIAGRAMS
C-033	3/4"	2#14	RGS	DDC-11	VFD-CWP-01	REFER TO H-DRAWINGS (DWG H-003) FOR BLOCK DIAGRAMS
C-034	3/4"	2#14	RGS	DDC-11	VFD-CWP-02	REFER TO H-DRAWINGS (DWG H-003) FOR BLOCK DIAGRAMS
C-035	3/4"	2#14	RGS	DDC-06	VFD-EF-19	REFER TO H-DRAWINGS (DWG H-003) FOR BLOCK DIAGRAMS
C-036	3/4"	8 #14	RGS	DDC-05	EF-20	REFER TO H-DRAWINGS (DWG H-003) FOR BLOCK DIAGRAMS
C-037	3/4"	8 #14	RGS	DDC-05	EF-21	REFER TO H-DRAWINGS (DWG H-003) FOR BLOCK DIAGRAMS
C-038	3/4"	6 #14	RGS	DDC-13	SP-01 VCP	REFER TO H-DRAWINGS (DWG H-003) FOR BLOCK DIAGRAMS
TB C&C						
C-039	1"	SINGLE MODE FIBER	RGS	PLC-TRAIN-A	RIO-DAF-A1	
C-040	1"	SINGLE MODE FIBER	RGS	PLC-TRAIN-A	RIO-FLT-A1	
C-041	1"	SINGLE MODE FIBER	RGS	PLC-TRAIN-A	RIO-DAF-A2	
C-042	1"	SINGLE MODE FIBER	RGS	PLC-TRAIN-A	RIO-FLT-A2	
C-043	1"	SINGLE MODE FIBER	RGS	PLC-TRAIN-B	RIO-DAF-B1	

CABLE AND CONDUIT SCHEDULE - WEST PARISH WTF						
CONDUIT NO.	SIZE	CABLE	CONDUIT TYPE	FROM	TO	REMARKS
C-044	1"	SINGLE MODE FIBER	RGS	PLC-TRAIN-B	RIO-FLT-B1	
C-045	1"	SINGLE MODE FIBER	RGS	PLC-TRAIN-B	RIO-DAF-B2	
C-046	1"	SINGLE MODE FIBER	RGS	PLC-TRAIN-B	RIO-FLT-B2	
C-047	1"	SINGLE MODE FIBER	RGS	PLC-BOP	RIO-CHEM-A	
C-048	1"	SINGLE MODE FIBER	RGS	PLC-BOP	RIO-CHEM-B	
C-049	1"	SINGLE MODE FIBER	RGS	PLC-BOP	RIO-CHEM-C	
C-050	1"	SINGLE MODE FIBER	RGS	PLC-BOP	RIO-MCC-1D	
C-051	1"	SINGLE MODE FIBER	RGS	PLC-BOP	RIO-MCC-2D	
C-052	1"	CAT 6 CABLE	RGS	RIO-MCC-1D	RIO-MCC-1A	
C-053	1"	CAT 6 CABLE	RGS	RIO-MCC-2D	RIO-MCC-2A	
C-054	1"	12 #14	RGS	RIO-DAF-B2	MOV-10120	ZSH-10120, ZSL-10120, YN-10120, YA-10120, ZCH-10120, ZCL-10120
C-055	1"	SINGLE MODE FIBER	RGS	RIO-DAF-A1	OWS-DAF-A1	

CABLE AND CONDUIT SCHEDULE - WEST PARISH WTF						
CONDUIT NO.	SIZE	CABLE	CONDUIT TYPE	FROM	TO	REMARKS
C-056	1"	SINGLE MODE FIBER	RGS	RIO-DAF-B1	OWS-DAF-B1	
C-057	1"	SINGLE MODE FIBER	RGS	RIO-FLT-A2	OWS-FLT-A2	
C-058	1"	SINGLE MODE FIBER	RGS	RIO-FLT-B2	OWS-FLT-B2	
C-059	1"	SINGLE MODE FIBER	RGS	RIO-CHEM-A	OWP-CHEM	
C-060	3/4"	2 #14	RGS	MOV-10120	LCS-10120	
C-061	1"	12 #14	RGS	RIO-DAF-A2	MOV-10110	ZSH-10110, ZSL-10110, YN-10110, YA-10110, ZCH-10110, ZCL-10110
C-062	3/4"	2 #14	RGS	MOV-10110	LCS-10110	
C-063	3/4"	4 #14	RGS	LCS-10310	P-10310	
C-064	3/4"	4 #14	RGS	LCS-10330	P-10330	
C-065	3/4"	2 #14	RGS	RIO-DAF-A2	FSL-10314	
C-066	3/4"	2 #14	RGS	RIO-DAF-B2	FSL-10334	
C-067	3/4"	6 #14	RGS	RIO-DAF-A2	FCV-10111	ZSL-10111, YN-10111, YA-10111
C-068	3/4"	2 #14	RGS	FCV-10111	LCS-10111	
C-069	3/4"	6 #14	RGS	RIO-DAF-B2	FCV-10121	ZSL-10121, YN-10121, YA-10121
C-070	3/4"	2 #14	RGS	FCV-10121	LCS-10121	
C-071	3/4"	4 #14	RGS	RIO-DAF-A2	ZSO-10313	ZSO-10313, ZSC-10313
C-072	3/4"	4 #14	RGS	RIO-DAF-B2	ZSO-10314	ZSO-10314, ZSC-10314
C-073	3/4"	4 #14	RGS	RIO-DAF-A2	ZSO-10311	ZSO-10311, ZSC-10311
C-074	3/4"	4 #14	RGS	RIO-DAF-B2	ZSO-10312	ZSO-10312, ZSC-10312
C-075	3/4"	2 #14	RGS	RIO-DAF-A2	FSL-10316	FAL-10316
C-076	3/4"	2 #14	RGS	RIO-DAF-B2	FSL-10317	FAL-10317

CABLE AND CONDUIT SCHEDULE - WEST PARISH WTF						
CONDUIT NO.	SIZE	CABLE	CONDUIT TYPE	FROM	TO	REMARKS
C-077	3/4"	4 #14	RGS	LCS-10320	P-10320	
C-078	3/4"	4 #14	RGS	LCS-10340	P-10340	
C-079	3/4"	2 #14	RGS	RIO-DAF-A2	FSL-10325	FAH-10325
C-080	3/4"	2 #14	RGS	RIO-DAF-B2	FSL-10345	FAL-10345
C-081	1"	12 #14	RGS	RIO-DAF-A1	MOV-20110	ZSH-A, ZSL-A, YN-A, YA-A, ZCH-A, ZCL-A
C-082	1"	12 #14	RGS	RIO-DAF-A1	MOV-20210	ZSH-A, ZSL-A, YN-A, YA-A, ZCH-A, ZCL-A
C-083	1"	12 #14	RGS	RIO-DAF-A1	MOV-20310	ZSH-A, ZSL-A, YN-A, YA-A, ZCH-A, ZCL-A
C-084	1"	12 #14	RGS	RIO-DAF-A2	MOV-20410	ZSH-A, ZSL-A, YN-A, YA-A, ZCH-A, ZCL-A
C-085	1"	12 #14	RGS	RIO-DAF-A2	MOV-20510	ZSH-A, ZSL-A, YN-A, YA-A, ZCH-A, ZCL-A
C-086	1"	12 #14	RGS	RIO-DAF-B1	MOV-20610	ZSH-A, ZSL-A, YN-A, YA-A, ZCH-A, ZCL-A
C-087	1"	12 #14	RGS	RIO-DAF-B1	MOV-20710	ZSH-A, ZSL-A, YN-A, YA-A, ZCH-A, ZCL-A
C-088	1"	12 #14	RGS	RIO-DAF-B1	MOV-20810	ZSH-A, ZSL-A, YN-A, YA-A, ZCH-A, ZCL-A
C-089	1"	12 #14	RGS	RIO-DAF-B2	MOV-20910	ZSH-A, ZSL-A, YN-A, YA-A, ZCH-A, ZCL-A
C-090	1"	12 #14	RGS	RIO-DAF-B2	MOV-21010	ZSH-A, ZSL-A, YN-A, YA-A, ZCH-A, ZCL-A
C-091	3/4"	8 #14	RGS	RIO-MCC-2D	VFD-20120	YSH-B, YN-B, YA-B, YCH-B
C-092	3/4"	8 #14	RGS	RIO-MCC-2D	VFD-20220	YSH-B, YN-B, YA-B, YCH-B
C-093	3/4"	8 #14	RGS	RIO-MCC-2D	VFD-20320	YSH-B, YN-B, YA-B, YCH-B
C-094	3/4"	8 #14	RGS	RIO-MCC-2D	VFD-20420	YSH-B, YN-B, YA-B, YCH-B
C-095	3/4"	8 #14	RGS	RIO-MCC-2D	VFD-20520	YSH-B, YN-B, YA-B, YCH-B
C-096	3/4"	8 #14	RGS	RIO-MCC-2D	VFD-20620	YSH-B, YN-B, YA-B, YCH-B
C-097	3/4"	8 #14	RGS	RIO-MCC-2D	VFD-20720	YSH-B, YN-B, YA-B, YCH-B

CABLE AND CONDUIT SCHEDULE - WEST PARISH WTF						
CONDUIT NO.	SIZE	CABLE	CONDUIT TYPE	FROM	TO	REMARKS
C-098	3/4"	8 #14	RGS	RIO-MCC-2D	VFD-20820	YSH-B, YN-B, YA-B, YCH-B
C-099	3/4"	8 #14	RGS	RIO-MCC-2D	VFD-20920	YSH-B, YN-B, YA-B, YCH-B
C-100	3/4"	8 #14	RGS	RIO-MCC-2D	VFD-21020	YSH-B, YN-B, YA-B, YCH-B
C-101	3/4"	8 #14	RGS	VFD-20120	FLOC-20120	
C-102	3/4"	8 #14	RGS	VFD-20220	FLOC-20220	
C-103	3/4"	8 #14	RGS	VFD-20320	FLOC-20320	
C-104	3/4"	8 #14	RGS	VFD-20420	FLOC-20420	
C-105	3/4"	8 #14	RGS	VFD-20520	FLOC-20520	
C-106	3/4"	8 #14	RGS	VFD-20620	FLOC-20620	
C-107	3/4"	8 #14	RGS	VFD-20720	FLOC-20720	
C-108	3/4"	8 #14	RGS	VFD-20820	FLOC-20820	
C-109	3/4"	8 #14	RGS	VFD-20920	FLOC-20920	
C-110	3/4"	8 #14	RGS	VFD-21020	FLOC-21020	
C-111	3/4"	8 #14	RGS	RIO-MCC-2D	VFD-20130	YSH-C, YN-C, YA-C, YCH-C
C-112	3/4"	8 #14	RGS	RIO-MCC-2D	VFD-20230	YSH-C, YN-C, YA-C, YCH-C
C-113	3/4"	8 #14	RGS	RIO-MCC-2D	VFD-20330	YSH-C, YN-C, YA-C, YCH-C
C-114	3/4"	8 #14	RGS	RIO-MCC-2D	VFD-20430	YSH-C, YN-C, YA-C, YCH-C
C-115	3/4"	8 #14	RGS	RIO-MCC-2D	VFD-20530	YSH-C, YN-C, YA-C, YCH-C
C-116	3/4"	8 #14	RGS	RIO-MCC-2D	VFD-20630	YSH-C, YN-C, YA-C, YCH-C
C-117	3/4"	8 #14	RGS	RIO-MCC-2D	VFD-20730	YSH-C, YN-C, YA-C, YCH-C
C-118	3/4"	8 #14	RGS	RIO-MCC-2D	VFD-20830	YSH-C, YN-C, YA-C, YCH-C
C-119	3/4"	8 #14	RGS	RIO-MCC-2D	VFD-20930	YSH-C, YN-C, YA-C, YCH-C
C-120	3/4"	8 #14	RGS	RIO-MCC-2D	VFD-21030	YSH-C, YN-C, YA-C, YCH-C
C-121	3/4"	8 #14	RGS	VFD-20130	FLOC-20130	
C-122	3/4"	8 #14	RGS	VFD-20230	FLOC-20230	
C-123	3/4"	8 #14	RGS	VFD-20330	FLOC-20330	
C-124	3/4"	8 #14	RGS	VFD-20430	FLOC-20430	
C-125	3/4"	8 #14	RGS	VFD-20530	FLOC-20530	

CABLE AND CONDUIT SCHEDULE - WEST PARISH WTF						
CONDUIT NO.	SIZE	CABLE	CONDUIT TYPE	FROM	TO	REMARKS
C-126	3/4"	8 #14	RGS	VFD-20630	FLOC-20630	
C-127	3/4"	8 #14	RGS	VFD-20730	FLOC-20730	
C-128	3/4"	8 #14	RGS	VFD-20830	FLOC-20830	
C-129	3/4"	8 #14	RGS	VFD-20930	FLOC-20930	
C-130	3/4"	8 #14	RGS	VFD-21030	FLOC-21030	
C-131	1"	12 #14	RGS	RIO-DAF-A1	MOV-30110	ZSH-E, ZSL-E, YN-E, YA-E, ZCH-E, ZCL-E
C-132	1"	12 #14	RGS	RIO-DAF-A1	MOV-30210	ZSH-E, ZSL-E, YN-E, YA-E, ZCH-E, ZCL-E
C-133	1"	12 #14	RGS	RIO-DAF-A1	MOV-30310	ZSH-E, ZSL-E, YN-E, YA-E, ZCH-E, ZCL-E
C-134	1"	12 #14	RGS	RIO-DAF-A2	MOV-30410	ZSH-E, ZSL-E, YN-E, YA-E, ZCH-E, ZCL-E
C-135	1"	12 #14	RGS	RIO-DAF-A2	MOV-30510	ZSH-E, ZSL-E, YN-E, YA-E, ZCH-E, ZCL-E
C-136	1"	12 #14	RGS	RIO-DAF-B1	MOV-30610	ZSH-E, ZSL-E, YN-E, YA-E, ZCH-E, ZCL-E
C-137	1"	12 #14	RGS	RIO-DAF-B1	MOV-30710	ZSH-E, ZSL-E, YN-E, YA-E, ZCH-E, ZCL-E
C-138	1"	12 #14	RGS	RIO-DAF-B1	MOV-30810	ZSH-E, ZSL-E, YN-E, YA-E, ZCH-E, ZCL-E
C-139	1"	12 #14	RGS	RIO-DAF-B2	MOV-30910	ZSH-E, ZSL-E, YN-E, YA-E, ZCH-E, ZCL-E
C-140	1"	12 #14	RGS	RIO-DAF-B2	MOV-31010	ZSH-E, ZSL-E, YN-E, YA-E, ZCH-E, ZCL-E
C-141	1"	12 #14	RGS	RIO-DAF-A1	MOV-30120	ZSH-F, ZSL-F, YN-F, YA-F, ZCH-F, ZCL-F
C-142	1"	12 #14	RGS	RIO-DAF-A1	MOV-30220	ZSH-F, ZSL-F, YN-F, YA-F, ZCH-F, ZCL-F
C-143	1"	12 #14	RGS	RIO-DAF-A1	MOV-30320	ZSH-F, ZSL-F, YN-F, YA-F, ZCH-F, ZCL-F

CABLE AND CONDUIT SCHEDULE - WEST PARISH WTF						
CONDUIT NO.	SIZE	CABLE	CONDUIT TYPE	FROM	TO	REMARKS
C-144	1"	12 #14	RGS	RIO-DAF-A2	MOV-30420	ZSH-F, ZSL-F, YN-F, YA-F, ZCH-F, ZCL-F
C-145	1"	12 #14	RGS	RIO-DAF-A2	MOV-30520	ZSH-F, ZSL-F, YN-F, YA-F, ZCH-F, ZCL-F
C-146	1"	12 #14	RGS	RIO-DAF-B1	MOV-30620	ZSH-F, ZSL-F, YN-F, YA-F, ZCH-F, ZCL-F
C-147	1"	12 #14	RGS	RIO-DAF-B1	MOV-30720	ZSH-F, ZSL-F, YN-F, YA-F, ZCH-F, ZCL-F
C-148	1"	12 #14	RGS	RIO-DAF-B1	MOV-30820	ZSH-F, ZSL-F, YN-F, YA-F, ZCH-F, ZCL-F
C-149	1"	12 #14	RGS	RIO-DAF-B2	MOV-30920	ZSH-F, ZSL-F, YN-F, YA-F, ZCH-F, ZCL-F
C-150	1"	12 #14	RGS	RIO-DAF-B2	MOV-31020	ZSH-F, ZSL-F, YN-F, YA-F, ZCH-F, ZCL-F
C-151	1"	12 #14	RGS	RIO-DAF-A1	MOV-30130	ZSH-G, ZSL-G, YN-G, YA-G, ZCH-G, ZCL-G
C-152	1"	12 #14	RGS	RIO-DAF-A1	MOV-30230	ZSH-G, ZSL-G, YN-G, YA-G, ZCH-G, ZCL-G
C-153	1"	12 #14	RGS	RIO-DAF-A1	MOV-30330	ZSH-G, ZSL-G, YN-G, YA-G, ZCH-G, ZCL-G
C-154	1"	12 #14	RGS	RIO-DAF-A2	MOV-30430	ZSH-G, ZSL-G, YN-G, YA-G, ZCH-G, ZCL-G
C-155	1"	12 #14	RGS	RIO-DAF-A2	MOV-30530	ZSH-G, ZSL-G, YN-G, YA-G, ZCH-G, ZCL-G
C-156	1"	12 #14	RGS	RIO-DAF-B1	MOV-30630	ZSH-G, ZSL-G, YN-G, YA-G, ZCH-G, ZCL-G
C-157	1"	12 #14	RGS	RIO-DAF-B1	MOV-30730	ZSH-G, ZSL-G, YN-G, YA-G, ZCH-G, ZCL-G
C-158	1"	12 #14	RGS	RIO-DAF-B1	MOV-30830	ZSH-G, ZSL-G, YN-G, YA-G, ZCH-G, ZCL-G
C-159	1"	12 #14	RGS	RIO-DAF-B2	MOV-30930	ZSH-G, ZSL-G, YN-G, YA-G, ZCH-G, ZCL-G

CABLE AND CONDUIT SCHEDULE - WEST PARISH WTF						
CONDUIT NO.	SIZE	CABLE	CONDUIT TYPE	FROM	TO	REMARKS
C-160	1"	12 #14	RGS	RIO-DAF-B2	MOV-31030	ZSH-G, ZSL-G, YN-G, YA-G, ZCH-G, ZCL-G
C-161	1"	12 #14	RGS	RIO-DAF-A1	MOV-30140	ZSH-H, ZSL-H, YN-H, YA-H, ZCH-H, ZCL-H
C-162	1"	12 #14	RGS	RIO-DAF-A1	MOV-30240	ZSH-H, ZSL-H, YN-H, YA-H, ZCH-H, ZCL-H
C-163	1"	12 #14	RGS	RIO-DAF-A1	MOV-30340	ZSH-H, ZSL-H, YN-H, YA-H, ZCH-H, ZCL-H
C-164	1"	12 #14	RGS	RIO-DAF-A2	MOV-30440	ZSH-H, ZSL-H, YN-H, YA-H, ZCH-H, ZCL-H
C-165	1"	12 #14	RGS	RIO-DAF-A2	MOV-30540	ZSH-H, ZSL-H, YN-H, YA-H, ZCH-H, ZCL-H
C-166	1"	12 #14	RGS	RIO-DAF-B1	MOV-30640	ZSH-H, ZSL-H, YN-H, YA-H, ZCH-H, ZCL-H
C-167	1"	12 #14	RGS	RIO-DAF-B1	MOV-30740	ZSH-H, ZSL-H, YN-H, YA-H, ZCH-H, ZCL-H
C-168	1"	12 #14	RGS	RIO-DAF-B1	MOV-30840	ZSH-H, ZSL-H, YN-H, YA-H, ZCH-H, ZCL-H
C-169	1"	12 #14	RGS	RIO-DAF-B2	MOV-30940	ZSH-H, ZSL-H, YN-H, YA-H, ZCH-H, ZCL-H
C-170	1"	12 #14	RGS	RIO-DAF-B2	MOV-31040	ZSH-H, ZSL-H, YN-H, YA-H, ZCH-H, ZCL-H
C-171	1"	12 #14	RGS	RIO-DAF-A1	MOV-30150	ZSH-J, ZSL-J, YN-J, YA-J, ZCH-J, ZCL-J
C-172	1"	12 #14	RGS	RIO-DAF-A1	MOV-30250	ZSH-J, ZSL-J, YN-J, YA-J, ZCH-J, ZCL-J
C-173	1"	12 #14	RGS	RIO-DAF-A1	MOV-30350	ZSH-J, ZSL-J, YN-J, YA-J, ZCH-J, ZCL-J
C-174	1"	12 #14	RGS	RIO-DAF-A2	MOV-30450	ZSH-J, ZSL-J, YN-J, YA-J, ZCH-J, ZCL-J
C-175	1"	12 #14	RGS	RIO-DAF-A2	MOV-30550	ZSH-J, ZSL-J, YN-J, YA-J, ZCH-J, ZCL-J

CABLE AND CONDUIT SCHEDULE - WEST PARISH WTF						
CONDUIT NO.	SIZE	CABLE	CONDUIT TYPE	FROM	TO	REMARKS
C-176	1"	12 #14	RGS	RIO-DAF-B1	MOV-30650	ZSH-J, ZSL-J, YN-J, YA-J, ZCH-J, ZCL-J
C-177	1"	12 #14	RGS	RIO-DAF-B1	MOV-30750	ZSH-J, ZSL-J, YN-J, YA-J, ZCH-J, ZCL-J
C-178	1"	12 #14	RGS	RIO-DAF-B1	MOV-30850	ZSH-J, ZSL-J, YN-J, YA-J, ZCH-J, ZCL-J
C-179	1"	12 #14	RGS	RIO-DAF-B2	MOV-30950	ZSH-J, ZSL-J, YN-J, YA-J, ZCH-J, ZCL-J
C-180	1"	12 #14	RGS	RIO-DAF-B2	MOV-31050	ZSH-J, ZSL-J, YN-J, YA-J, ZCH-J, ZCL-J
C-181	3/4"	8 #14	RGS	RIO-MCC-2D	VFD-30160	YSH-K, YN-K, YA-K, YCH-K
C-182	3/4"	8 #14	RGS	RIO-MCC-2D	VFD-30260	YSH-K, YN-K, YA-K, YCH-K
C-183	3/4"	8 #14	RGS	RIO-MCC-2D	VFD-30360	YSH-K, YN-K, YA-K, YCH-K
C-184	3/4"	8 #14	RGS	RIO-MCC-2D	VFD-30460	YSH-K, YN-K, YA-K, YCH-K
C-185	3/4"	8 #14	RGS	RIO-MCC-2D	VFD-30560	YSH-K, YN-K, YA-K, YCH-K
C-186	3/4"	8 #14	RGS	RIO-MCC-2D	VFD-30660	YSH-K, YN-K, YA-K, YCH-K
C-187	3/4"	8 #14	RGS	RIO-MCC-2D	VFD-30760	YSH-K, YN-K, YA-K, YCH-K
C-188	3/4"	8 #14	RGS	RIO-MCC-2D	VFD-30860	YSH-K, YN-K, YA-K, YCH-K
C-189	3/4"	8 #14	RGS	RIO-MCC-2D	VFD-30960	YSH-K, YN-K, YA-K, YCH-K
C-190	3/4"	8 #14	RGS	RIO-MCC-2D	VFD-31060	YSH-K, YN-K, YA-K, YCH-K
C-191	3/4"	8 #14	RGS	VFD-30160	SKMR-30160	
C-192	3/4"	8 #14	RGS	VFD-30260	SKMR-30260	
C-193	3/4"	8 #14	RGS	VFD-30360	SKMR-30360	
C-194	3/4"	8 #14	RGS	VFD-30460	SKMR-30460	
C-195	3/4"	8 #14	RGS	VFD-30560	SKMR-30560	
C-196	3/4"	8 #14	RGS	VFD-30660	SKMR-30660	
C-197	3/4"	8 #14	RGS	VFD-30760	SKMR-30760	
C-198	3/4"	8 #14	RGS	VFD-30860	SKMR-30860	
C-199	3/4"	8 #14	RGS	VFD-30960	SKMR-30960	
C-200	3/4"	8 #14	RGS	VFD-31060	SKMR-30960	

CABLE AND CONDUIT SCHEDULE - WEST PARISH WTF						
CONDUIT NO.	SIZE	CABLE	CONDUIT TYPE	FROM	TO	REMARKS
C-201	1"	12 #14	RGS	RIO-DAF-A2	MOV-30001	ZSH-30001, ZSL-30001, YN-30001, YA-30001, ZCH-30001, ZCL-30001
C-202	1"	12 #14	RGS	RIO-DAF-B2	MOV-30002	ZSH-30002, ZSL-30002, YN-30002, YA-30002, ZCH-30002, ZCL-30002
C-203	1"	12 #14	RGS	RIO-DAF-A2	MOV-30003	ZSH-30003, ZSL-30003, YN-30003, YA-30003, ZCH-30003, ZCL-30003
C-204	3/4"	4 #14	RGS	LCS-30010	P-30010	
C-205	3/4"	4 #14	RGS	LCS-30020	P-30020	
C-206	3/4"	2 #14	RGS	RIO-MCC-2D	FSL-30014	FAL-30014
C-207	3/4"	2 #14	RGS	RIO-MCC-2D	FSL-30024	FAL-30024
C-208	1"	12 #14	RGS	RIO-MCC-1D	VFD-33010	PSL-33011, YSH-33010, YN-33010, YA-33010, YCH-33010, FSL-33012
C-209	3/4"	2 #14	RGS	RIO-MCC-1D	PSL-33011	
C-210	1"	12#14	RGS	VFD-33010	LCS-33010	
C-211	3/4"	2 #14	RGS	RIO-MCC-1D	FSL-33012	
C-212	1"	12 #14	RGS	RIO-MCC-1D	VFD-33020	PSL-33021, YSH-33020, YN-33020, YA-33020, YCH-33020, FSL-33022
C-213	3/4"	2 #14	RGS	RIO-MCC-1D	PSL-33021	
C-214	1"	12#14	RGS	VFD-33020	LCS-33020	
C-215	3/4"	2 #14	RGS	RIO-MCC-1D	FSL-33022	
C-216	1"	12 #14	RGS	RIO-MCC-1D	VFD-33030	PSL-33031, YSH-33030, YN-33030, YA-33030, YCH-33030, FSL-33032
C-217	3/4"	2 #14	RGS	RIO-MCC-1D	PSL-33031	
C-218	1"	12#14	RGS	VFD-33030	LCS-33030	
C-219	3/4"	2 #14	RGS	RIO-MCC-1D	FSL-33032	
C-220	1"	12 #14	RGS	RIO-MCC-1D	VFD-33040	PSL-33041, YSH-33040, YN-33040, YA-33040, YCH-33040, FSL-33042
C-221	3/4"	2 #14	RGS	RIO-MCC-1D	PSL-33041	
C-222	1"	12#14	RGS	VFD-33040	LCS-33040	
C-223	3/4"	2 #14	RGS	RIO-MCC-1D	FSL-33042	

CABLE AND CONDUIT SCHEDULE - WEST PARISH WTF						
CONDUIT NO.	SIZE	CABLE	CONDUIT TYPE	FROM	TO	REMARKS
C-224	3/4"	6 #14	RGS	RIO-DAF-A2	LCP-33050	DPAH-33050, YI-33050, YA-33050
C-225	3/4"	2 #14	RGS	LCP-33050	STR-33050	
C-226	3/4"	2 #14	RGS	LCP-33050	PDSH-33053	
C-227	3/4"	2 #14	RGS	LCP-33050	MOV-33054	
C-228	3/4"	8 #14	RGS	RIO-MCC-2D	LCP-34010/COMP-34010	YSH-34010, YA-34010, PAL-34010, TAH-34010
C-229	3/4"	8 #14	RGS	RIO-MCC-2D	LCP-34020/COMP-34020	YSH-34020, YA-34020, PAL-34020, TAH-34020
C-230	3/4"	2 #14	RGS	RIO-MCC-2D	PSL-34032	PAL-34032
C-231	3/4"	2 #14	RGS	RIO-MCC-2D	PSL-34042	PAL-34042
C-232	3/4"	2 #14	RGS	RIO-DAF-A2	DPSL-34006	PDAH-34006
C-233	3/4"	2 #14	RGS	RIO-DAF-A2	DPSL-34003	PDAH-34003
C-234	3/4"	8 #14	RGS	RIO-DAF-A2	LCV-34051	YSH-34051, YN-34051, YA-34051, YCH-34051
C-235	3/4"	8 #14	RGS	RIO-DAF-A2	MOV-34060	YSH-34060, YN-34060, YA-34060, YCH-34060
C-236	3/4"	8 #14	RGS	RIO-DAF-B2	LCV-34081	YSH-34081, YN-34081, YA-34081, YCH-34081
C-237	3/4"	8 #14	RGS	RIO-DAF-B2	MOV-34090	YSH-34090, YN-34090, YA-34090, YCH-34090
C-238	3/4"	2 #14	RGS	RIO-DAF-A2	LSH-35012	
C-239	1"	12 #14	RGS	RIO-MCC-1D	MCC-1	PSL-35021, YSH-35020, YN-35020, YA-35020, YCH-35020, PSH-35022
C-240	3/4"	2 #14	RGS	RIO-MCC-1D	PSL-35021	
C-241	1"	12 #14	RGS	MCC-1	LCS-35020	
C-242	3/4"	2 #14	RGS	LCS-35020	TSH-35020	
C-243	3/4"	2 #14	RGS	RIO-MCC-1D	PSH-35022	
C-244	1"	12 #14	RGS	RIO-MCC-1D	MCC-1	PSL-35031, YSH-35030, YN-35030, YA-35030, YCH-35030, PSH-35032
C-245	3/4"	2 #14	RGS	RIO-MCC-1D	PSL-35031	

CABLE AND CONDUIT SCHEDULE - WEST PARISH WTF						
CONDUIT NO.	SIZE	CABLE	CONDUIT TYPE	FROM	TO	REMARKS
C-246	1"	12 #14	RGS	MCC-1	LCS-35030	
C-247	3/4"	2 #14	RGS	LCS-35030	TSH-35030	
C-248	3/4"	2 #14	RGS	RIO-MCC-1D	PSH-35032	
C-249	3/4"	2 #14	RGS	RIO-DAF-B2	LSH-35052	
C-250	1"	12 #14	RGS	RIO-MCC-1D	MCC-1	PSL-35061, YSH-35060, YN-35060, YA-35060, YCH-35060, PSH-35062
C-251	3/4"	2 #14	RGS	RIO-MCC-1D	PSL-35061	
C-252	1"	12 #14	RGS	MCC-1	LCS-35060	
C-253	3/4"	2 #14	RGS	LCS-35060	TSH-35060	
C-254	3/4"	2 #14	RGS	RIO-MCC-1D	PSH-35062	
C-255	1"	12 #14	RGS	RIO-MCC-1D	MCC-1	PSL-35071, YSH-35070, YN-35070, YA-35070, YCH-35070, PSH-35072
C-256	3/4"	2 #14	RGS	RIO-MCC-1D	PSL-35071	
C-257	1"	12 #14	RGS	MCC-1	LCS-35070	
C-258	3/4"	2 #14	RGS	LCS-35070	TSH-35070	
C-259	3/4"	2 #14	RGS	RIO-MCC-1D	PSH-35072	
C-260	1"	12 #14	RGS	RIO-FLT-A1	MOV-40120	ZSH-AA, ZSL-AA, YN-AA, YA-AA, ZCH-AA, ZCL-AA
C-261	1"	12 #14	RGS	RIO-FLT-A1	MOV-40220	ZSH-AA, ZSL-AA, YN-AA, YA-AA, ZCH-AA, ZCL-AA
C-262	1"	12 #14	RGS	RIO-FLT-A1	MOV-40320	ZSH-AA, ZSL-AA, YN-AA, YA-AA, ZCH-AA, ZCL-AA
C-263	1"	12 #14	RGS	RIO-FLT-A1	MOV-40420	ZSH-AA, ZSL-AA, YN-AA, YA-AA, ZCH-AA, ZCL-AA
C-264	1"	12 #14	RGS	RIO-FLT-A2	MOV-40520	ZSH-AA, ZSL-AA, YN-AA, YA-AA, ZCH-AA, ZCL-AA
C-265	1"	12 #14	RGS	RIO-FLT-A2	MOV-40620	ZSH-AA, ZSL-AA, YN-AA, YA-AA, ZCH-AA, ZCL-AA
C-266	1"	12 #14	RGS	RIO-FLT-A2	MOV-40720	ZSH-AA, ZSL-AA, YN-AA, YA-AA, ZCH-AA, ZCL-AA

CABLE AND CONDUIT SCHEDULE - WEST PARISH WTF						
CONDUIT NO.	SIZE	CABLE	CONDUIT TYPE	FROM	TO	REMARKS
C-267	1"	12 #14	RGS	RIO-FLT-B1	MOV-40820	ZSH-AA, ZSL-AA, YN-AA, YA-AA, ZCH-AA, ZCL-AA
C-268	1"	12 #14	RGS	RIO-FLT-B1	MOV-40920	ZSH-AA, ZSL-AA, YN-AA, YA-AA, ZCH-AA, ZCL-AA
C-269	1"	12 #14	RGS	RIO-FLT-B1	MOV-41020	ZSH-AA, ZSL-AA, YN-AA, YA-AA, ZCH-AA, ZCL-AA
C-270	1"	12 #14	RGS	RIO-FLT-B1	MOV-41120	ZSH-AA, ZSL-AA, YN-AA, YA-AA, ZCH-AA, ZCL-AA
C-271	1"	12 #14	RGS	RIO-FLT-B2	MOV-41220	ZSH-AA, ZSL-AA, YN-AA, YA-AA, ZCH-AA, ZCL-AA
C-272	1"	12 #14	RGS	RIO-FLT-B2	MOV-41320	ZSH-AA, ZSL-AA, YN-AA, YA-AA, ZCH-AA, ZCL-AA
C-273	1"	12 #14	RGS	RIO-FLT-B2	MOV-41420	ZSH-AA, ZSL-AA, YN-AA, YA-AA, ZCH-AA, ZCL-AA
C-274	1"	12 #14	RGS	RIO-FLT-A1	MOV-40130	ZSH-BB, ZSL-BB, YN-BB, YA-BB, ZCH-BB, ZCL-BB
C-275	1"	12 #14	RGS	RIO-FLT-A1	MOV-40230	ZSH-BB, ZSL-BB, YN-BB, YA-BB, ZCH-BB, ZCL-BB
C-276	1"	12 #14	RGS	RIO-FLT-A1	MOV-40330	ZSH-BB, ZSL-BB, YN-BB, YA-BB, ZCH-BB, ZCL-BB
C-277	1"	12 #14	RGS	RIO-FLT-A1	MOV-40430	ZSH-BB, ZSL-BB, YN-BB, YA-BB, ZCH-BB, ZCL-BB
C-278	1"	12 #14	RGS	RIO-FLT-A2	MOV-40530	ZSH-BB, ZSL-BB, YN-BB, YA-BB, ZCH-BB, ZCL-BB
C-279	1"	12 #14	RGS	RIO-FLT-A2	MOV-40630	ZSH-BB, ZSL-BB, YN-BB, YA-BB, ZCH-BB, ZCL-BB
C-280	1"	12 #14	RGS	RIO-FLT-A2	MOV-40730	ZSH-BB, ZSL-BB, YN-BB, YA-BB, ZCH-BB, ZCL-BB
C-281	1"	12 #14	RGS	RIO-FLT-B1	MOV-40830	ZSH-BB, ZSL-BB, YN-BB, YA-BB, ZCH-BB, ZCL-BB
C-282	1"	12 #14	RGS	RIO-FLT-B1	MOV-40930	ZSH-BB, ZSL-BB, YN-BB, YA-BB, ZCH-BB, ZCL-BB

CABLE AND CONDUIT SCHEDULE - WEST PARISH WTF						
CONDUIT NO.	SIZE	CABLE	CONDUIT TYPE	FROM	TO	REMARKS
C-283	1"	12 #14	RGS	RIO-FLT-B1	MOV-41030	ZSH-BB, ZSL-BB, YN-BB, YA-BB, ZCH-BB, ZCL-BB
C-284	1"	12 #14	RGS	RIO-FLT-B1	MOV-41130	ZSH-BB, ZSL-BB, YN-BB, YA-BB, ZCH-BB, ZCL-BB
C-285	1"	12 #14	RGS	RIO-FLT-B2	MOV-41230	ZSH-BB, ZSL-BB, YN-BB, YA-BB, ZCH-BB, ZCL-BB
C-286	1"	12 #14	RGS	RIO-FLT-B2	MOV-41330	ZSH-BB, ZSL-BB, YN-BB, YA-BB, ZCH-BB, ZCL-BB
C-287	1"	12 #14	RGS	RIO-FLT-B2	MOV-41430	ZSH-BB, ZSL-BB, YN-BB, YA-BB, ZCH-BB, ZCL-BB
C-288	1"	12 #14	RGS	RIO-FLT-A1	MOV-40140	ZSH-CC, ZSL-CC, YN-CC, YA-CC, ZCH-CC, ZCL-CC
C-289	1"	12 #14	RGS	RIO-FLT-A1	MOV-40240	ZSH-CC, ZSL-CC, YN-CC, YA-CC, ZCH-CC, ZCL-CC
C-290	1"	12 #14	RGS	RIO-FLT-A1	MOV-40340	ZSH-CC, ZSL-CC, YN-CC, YA-CC, ZCH-CC, ZCL-CC
C-291	1"	12 #14	RGS	RIO-FLT-A1	MOV-40440	ZSH-CC, ZSL-CC, YN-CC, YA-CC, ZCH-CC, ZCL-CC
C-292	1"	12 #14	RGS	RIO-FLT-A2	MOV-40540	ZSH-CC, ZSL-CC, YN-CC, YA-CC, ZCH-CC, ZCL-CC
C-293	1"	12 #14	RGS	RIO-FLT-A2	MOV-40640	ZSH-CC, ZSL-CC, YN-CC, YA-CC, ZCH-CC, ZCL-CC
C-294	1"	12 #14	RGS	RIO-FLT-A2	MOV-40740	ZSH-CC, ZSL-CC, YN-CC, YA-CC, ZCH-CC, ZCL-CC
C-295	1"	12 #14	RGS	RIO-FLT-B1	MOV-40840	ZSH-CC, ZSL-CC, YN-CC, YA-CC, ZCH-CC, ZCL-CC
C-296	1"	12 #14	RGS	RIO-FLT-B1	MOV-40940	ZSH-CC, ZSL-CC, YN-CC, YA-CC, ZCH-CC, ZCL-CC
C-297	1"	12 #14	RGS	RIO-FLT-B1	MOV-41040	ZSH-CC, ZSL-CC, YN-CC, YA-CC, ZCH-CC, ZCL-CC
C-298	1"	12 #14	RGS	RIO-FLT-B1	MOV-41140	ZSH-CC, ZSL-CC, YN-CC, YA-CC, ZCH-CC, ZCL-CC

CABLE AND CONDUIT SCHEDULE - WEST PARISH WTF						
CONDUIT NO.	SIZE	CABLE	CONDUIT TYPE	FROM	TO	REMARKS
C-299	1"	12 #14	RGS	RIO-FLT-B2	MOV-41240	ZSH-CC, ZSL-CC, YN-CC, YA-CC, ZCH-CC, ZCL-CC
C-300	1"	12 #14	RGS	RIO-FLT-B2	MOV-41340	ZSH-CC, ZSL-CC, YN-CC, YA-CC, ZCH-CC, ZCL-CC
C-301	1"	12 #14	RGS	RIO-FLT-B2	MOV-41440	ZSH-CC, ZSL-CC, YN-CC, YA-CC, ZCH-CC, ZCL-CC
C-302	1"	12 #14	RGS	RIO-FLT-A1	MOV-40150	ZSH-GG, ZSL-GG, YN-GG, YA-GG, ZCH-GG, ZCL-GG
C-303	1"	12 #14	RGS	RIO-FLT-A1	MOV-40250	ZSH-GG, ZSL-GG, YN-GG, YA-GG, ZCH-GG, ZCL-GG
C-304	1"	12 #14	RGS	RIO-FLT-A1	MOV-40350	ZSH-GG, ZSL-GG, YN-GG, YA-GG, ZCH-GG, ZCL-GG
C-305	1"	12 #14	RGS	RIO-FLT-A1	MOV-40450	ZSH-GG, ZSL-GG, YN-GG, YA-GG, ZCH-GG, ZCL-GG
C-306	1"	12 #14	RGS	RIO-FLT-A2	MOV-40550	ZSH-GG, ZSL-GG, YN-GG, YA-GG, ZCH-GG, ZCL-GG
C-307	1"	12 #14	RGS	RIO-FLT-A2	MOV-40650	ZSH-GG, ZSL-GG, YN-GG, YA-GG, ZCH-GG, ZCL-GG
C-308	1"	12 #14	RGS	RIO-FLT-A2	MOV-40750	ZSH-GG, ZSL-GG, YN-GG, YA-GG, ZCH-GG, ZCL-GG
C-309	1"	12 #14	RGS	RIO-FLT-B1	MOV-40850	ZSH-GG, ZSL-GG, YN-GG, YA-GG, ZCH-GG, ZCL-GG
C-310	1"	12 #14	RGS	RIO-FLT-B1	MOV-40950	ZSH-GG, ZSL-GG, YN-GG, YA-GG, ZCH-GG, ZCL-GG
C-311	1"	12 #14	RGS	RIO-FLT-B1	MOV-41050	ZSH-GG, ZSL-GG, YN-GG, YA-GG, ZCH-GG, ZCL-GG
C-312	1"	12 #14	RGS	RIO-FLT-B1	MOV-41150	ZSH-GG, ZSL-GG, YN-GG, YA-GG, ZCH-GG, ZCL-GG
C-313	1"	12 #14	RGS	RIO-FLT-B2	MOV-41250	ZSH-GG, ZSL-GG, YN-GG, YA-GG, ZCH-GG, ZCL-GG
C-314	1"	12 #14	RGS	RIO-FLT-B2	MOV-41350	ZSH-GG, ZSL-GG, YN-GG, YA-GG, ZCH-GG, ZCL-GG

CABLE AND CONDUIT SCHEDULE - WEST PARISH WTF						
CONDUIT NO.	SIZE	CABLE	CONDUIT TYPE	FROM	TO	REMARKS
C-315	1"	12 #14	RGS	RIO-FLT-B2	MOV-41450	ZSH-GG, ZSL-GG, YN-GG, YA-GG, ZCH-GG, ZCL-GG
C-316	3/4"	8 #14	RGS	RIO-FLT-A1	FCV-40100	ZSH-40100, ZSL-40100, YN-40100, YA-40100
C-317	3/4"	4 #14	RGS	FCV-40100	LCS-40100	
C-318	3/4"	6 #14	RGS	RIO-FLT-A1	MOV-40160	ZSL-MM, YN-MM, YA-MM
C-319	3/4"	6 #14	RGS	RIO-FLT-A1	MOV-40260	ZSL-MM, YN-MM, YA-MM
C-320	3/4"	6 #14	RGS	RIO-FLT-A1	MOV-40360	ZSL-MM, YN-MM, YA-MM
C-321	3/4"	6 #14	RGS	RIO-FLT-A1	MOV-40460	ZSL-MM, YN-MM, YA-MM
C-322	3/4"	6 #14	RGS	RIO-FLT-A2	MOV-40560	ZSL-MM, YN-MM, YA-MM
C-323	3/4"	6 #14	RGS	RIO-FLT-A2	MOV-40660	ZSL-MM, YN-MM, YA-MM
C-324	3/4"	6 #14	RGS	RIO-FLT-A2	MOV-40760	ZSL-MM, YN-MM, YA-MM
C-325	3/4"	6 #14	RGS	RIO-FLT-B1	MOV-40860	ZSL-MM, YN-MM, YA-MM
C-326	3/4"	6 #14	RGS	RIO-FLT-B1	MOV-40960	ZSL-MM, YN-MM, YA-MM
C-327	3/4"	6 #14	RGS	RIO-FLT-B1	MOV-41060	ZSL-MM, YN-MM, YA-MM
C-328	3/4"	6 #14	RGS	RIO-FLT-B1	MOV-41160	ZSL-MM, YN-MM, YA-MM
C-329	3/4"	6 #14	RGS	RIO-FLT-B2	MOV-41260	ZSL-MM, YN-MM, YA-MM
C-330	3/4"	6 #14	RGS	RIO-FLT-B2	MOV-41360	ZSL-MM, YN-MM, YA-MM
C-331	3/4"	6 #14	RGS	RIO-FLT-B2	MOV-41460	ZSL-MM, YN-MM, YA-MM
C-332	3/4"	6 #14	RGS	RIO-FLT-A1	MOV-40170	ZSL-NN, YN-NN, YA-NN
C-333	3/4"	6 #14	RGS	RIO-FLT-A1	MOV-40270	ZSL-NN, YN-NN, YA-NN
C-334	3/4"	6 #14	RGS	RIO-FLT-A1	MOV-40370	ZSL-NN, YN-NN, YA-NN
C-335	3/4"	6 #14	RGS	RIO-FLT-A1	MOV-40470	ZSL-NN, YN-NN, YA-NN
C-336	3/4"	6 #14	RGS	RIO-FLT-A2	MOV-40570	ZSL-NN, YN-NN, YA-NN
C-337	3/4"	6 #14	RGS	RIO-FLT-A2	MOV-40670	ZSL-NN, YN-NN, YA-NN
C-338	3/4"	6 #14	RGS	RIO-FLT-A2	MOV-40770	ZSL-NN, YN-NN, YA-NN
C-339	3/4"	6 #14	RGS	RIO-FLT-B1	MOV-40870	ZSL-NN, YN-NN, YA-NN
C-340	3/4"	6 #14	RGS	RIO-FLT-B1	MOV-40970	ZSL-NN, YN-NN, YA-NN
C-341	3/4"	6 #14	RGS	RIO-FLT-B1	MOV-41070	ZSL-NN, YN-NN, YA-NN

CABLE AND CONDUIT SCHEDULE - WEST PARISH WTF						
CONDUIT NO.	SIZE	CABLE	CONDUIT TYPE	FROM	TO	REMARKS
C-342	3/4"	6 #14	RGS	RIO-FLT-B1	MOV-41170	ZSL-NN, YN-NN, YA-NN
C-343	3/4"	6 #14	RGS	RIO-FLT-B2	MOV-41270	ZSL-NN, YN-NN, YA-NN
C-344	3/4"	6 #14	RGS	RIO-FLT-B2	MOV-41370	ZSL-NN, YN-NN, YA-NN
C-345	3/4"	6 #14	RGS	RIO-FLT-B2	MOV-41470	ZSL-NN, YN-NN, YA-NN
C-346	3/4"	2 #14	RGS	RIO-FLT-A2	FSL-42045	FAL-42045
C-347	3/4"	2 #14	RGS	RIO-FLT-A2	FSL-42046	FAL-42046
C-348	3/4"	2 #14	RGS	RIO-FLT-B2	FSL-42047	FAL-42048
C-349	3/4"	2 #14	RGS	RIO-FLT-B2	FSL-42048	FAL-42047
C-350	3/4"	4 #14	RGS	LCS-40430	P-42030	
C-351	3/4"	4 #14	RGS	LCS-40440	P-42040	
C-352	3/4"	2 #14	RGS	RIO-FLT-A2	FSL-42053	FAL-42053
C-353	3/4"	2 #14	RGS	RIO-FLT-B2	FSL-42058	FAL-42058
C-354	1"	12 #14	RGS	RIO-FLT-A2	MOG-42050	ZSH-42050, ZSL-42050, YN-42050, YA-42050, ZCH-42050, ZCL-42050
C-355	1"	12 #14	RGS	RIO-FLT-B2	MOG-42060	ZSH-42060, ZSL-42060, YN-42060, YA-42060, ZCH-42060, ZCL-42060
C-356	1"	14 #14	RGS	RIO-MCC-2D	MCC-2	YSH-45010, YN-45010, YA-45010, YCH-45010, PAH-45010, TAH-45010, YAK-45010
C-357	1"	18 #14	RGS	MCC-2	LCP-45010	
C-358	3/4"	8 #14	RGS	LCP-45010	BL-45010	
C-359	1"	14 #14	RGS	RIO-MCC-2D	MCC-2	YSH-45030, YN-45030, YA-45030, YCH-45030, PAH-45030, TAH-45030, YAH-45030
C-360	1"	18 #14	RGS	MCC-2	LCP-45030	
C-361	3/4"	8 #14	RGS	LCP-45030	BL-45030	
C-362	1"	12 #14	RGS	RIO-MCC-2D	MOV-45020	ZSH-45020, ZSL-45020, YN-45020, YA-45020, ZCH-45020, ZCL-45020

CABLE AND CONDUIT SCHEDULE - WEST PARISH WTF						
CONDUIT NO.	SIZE	CABLE	CONDUIT TYPE	FROM	TO	REMARKS
C-363	3/4"	10 #14	PVC COATED RGS	RIO-MCC-1D	LCS-51000	LAH-51012, LAH-51022, LAH-51032, LAH-51042, LAH-51101
C-364	3/4"	2 #14	PVC COATED RGS	LCS-51000	LSH-51012	
C-365	3/4"	2 #14	PVC COATED RGS	LCS-51000	LSH-51022	
C-366	3/4"	2 #14	PVC COATED RGS	LCS-51000	LSH-51032	
C-367	3/4"	2 #14	PVC COATED RGS	LCS-51000	LSH-51042	
C-368	3/4"	2 #14	RGS	RIO-CHEM-A	FSH-51001	FAH-51001
C-369	3/4"	2 #14	RGS	RIO-CHEM-A	FSH-51002	FAH-51002
C-370	3/4"	6 #14	RGS	RIO-MCC-1D	MCC-1	YSH-51060, YAK-51060, YA-51060
C-371	1"	12 #14	PVC COATED RGS	MCC-1	LCS-51060	
C-372	3/4"	2 #14	PVC COATED RGS	LSH-51112	LCS-51060	FROM PACL DAY TANK
C-373	3/4"	6 #14	RGS	RIO-MCC-1D	MCC-1	YSH-51070, YAK-51070, YA-51070
C-374	1"	12 #14	PVC COATED RGS	MCC-1	LCS-51070	
C-375	3/4"	2 #14	PVC COATED RGS	LSH-51112	LCS-51070	FROM PACL DAY TANK

CABLE AND CONDUIT SCHEDULE - WEST PARISH WTF						
CONDUIT NO.	SIZE	CABLE	CONDUIT TYPE	FROM	TO	REMARKS
C-376	3/4"	2 #14	PVC COATED RGS	RIO-CHEM-A	LSH-51101	LAH-51101
C-377	3/4"	2 #14	PVC COATED RGS	RIO-CHEM-A	FSH-51102	FAH-51102
C-377.1	3/4"	2 #14	PVC COATED RGS	RIO-CHEM-A	FSH-51103	FAH-51103
C-378	3/4"	2 #14	PVC COATED RGS	RIO-CHEM-A	LSH-51112	LAH-51112
C-379	3/4"	8 #14	PVC COATED RGS	RIO-CHEM-A	LCP-51120	YSH-51120, YN-51120, YA-51120, YCH-51120
C-380	3/4"	8 #14	PVC COATED RGS	RIO-CHEM-A	LCP-51130	YSH-51130, YN-51130, YA-51130, YCH-51130
C-381	3/4"	8 #14	PVC COATED RGS	RIO-CHEM-A	LCP-51140	YSH-51140, YN-51140, YA-51140, YCH-51140
C-382	3/4"	8 #14	PVC COATED RGS	RIO-CHEM-A	LCP-51150	YSH-51150, YN-51150, YA-51150, YCH-51150
C-383	3/4"	6 #14	PVC SCHEDULE 80	RIO-MCC-1D	LCS-52000	LAH-52012, LAH-52022, LAH-52101
C-384	3/4"	2 #14	PVC SCHEDULE 80	LCS-52000	LSH-52012	
C-385	3/4"	2 #14	PVC SCHEDULE 80	LCS-52000	LSH-52022	

CABLE AND CONDUIT SCHEDULE - WEST PARISH WTF						
CONDUIT NO.	SIZE	CABLE	CONDUIT TYPE	FROM	TO	REMARKS
C-386	3/4"	2 #14	RGS	RIO-CHEM-A	FSH-51003	FAH-51003
C-387	3/4"	6 #14	RGS	RIO-MCC-1D	MCC-1	YSH-52060, YAK-52060, YA-52060
C-388	1"	12 #14	PVC SCHEDULE 80	MCC-1	LCS-52060	
C-389	3/4"	2 #14	PVC SCHEDULE 80	LSH-52112	LCS-52060	FROM DAY TANK
C-390	3/4"	6 #14	RGS	RIO-MCC-1D	MCC-1	YSH-52070, YAK-52070, YA-52070
C-391	1"	12 #14	PVC SCHEDULE 80	MCC-1	LCS-52070	
C-392	3/4"	2 #14	PVC SCHEDULE 80	LSH-52112	LCS-52070	FROM DAY TANK
C-393	3/4"	6 #14	RGS	RIO-MCC-1D	MCC-1	YSH-52080, YAK-52080, YA-52080
C-394	1"	12 #14	PVC SCHEDULE 80	MCC-1	LCS-52080	
C-395	3/4"	2 #14	PVC SCHEDULE 80	LSH-52117	LCS-52080	FROM DAY TANK
C-396	3/4"	6 #14	RGS	RIO-MCC-1D	MCC-1	YSH-52090, YAK-52090, YA-52090
C-397	1"	12 #14	PVC SCHEDULE 80	MCC-1	LCS-52090	
C-398	3/4"	2 #14	PVC SCHEDULE 80	LSH-52117	LCS-52090	FROM DAY TANK
C-399	3/4"	2 #14	PVC SCHEDULE 80	RIO-CHEM-B	LSH-52101	LAH-52101

CABLE AND CONDUIT SCHEDULE - WEST PARISH WTF						
CONDUIT NO.	SIZE	CABLE	CONDUIT TYPE	FROM	TO	REMARKS
C-400	3/4"	2 #14	PVC SCHEDULE 80	RIO-CHEM-B	FSH-52102	FAH-52102
C-401	3/4"	2 #14	PVC SCHEDULE 80	RIO-CHEM-B	LSH-52112	LAH-52112
C-402	3/4"	8 #14	PVC SCHEDULE 80	RIO-CHEM-B	LCP-52120	YSH-52120, YN-52120, YA-52120, YCH-52120
C-403	3/4"	8 #14	PVC SCHEDULE 80	RIO-CHEM-B	LCP-52130	YSH-52130, YN-52130, YA-52130, YCH-52130
C-404	3/4"	8 #14	PVC SCHEDULE 80	RIO-CHEM-B	LCP-52140	YSH-52140, YN-52140, YA-52140, YCH-52140
C-405	3/4"	8 #14	PVC SCHEDULE 80	RIO-CHEM-B	LCP-52150	YSH-52150, YN-52150, YA-52150, YCH-52150
C-406	3/4"	2 #14	PVC SCHEDULE 80	RIO-CHEM-B	FSL-52105	FAL-52105
C-407	3/4"	2 #14	PVC SCHEDULE 80	RIO-CHEM-B	FSL-52106	FAL-52106
C-408	3/4"	2 #14	PVC SCHEDULE 80	RIO-CHEM-B	LSH-52117	LAH-52117
C-409	3/4"	8 #14	PVC SCHEDULE 80	RIO-CHEM-B	LCP-52160	YSH-52160, YN-52160, YA-52160, YCH-52160
C-410	3/4"	8 #14	PVC SCHEDULE 80	RIO-CHEM-B	LCP-52170	YSH-52170, YN-52170, YA-52170, YCH-52170

CABLE AND CONDUIT SCHEDULE - WEST PARISH WTF						
CONDUIT NO.	SIZE	CABLE	CONDUIT TYPE	FROM	TO	REMARKS
C-411	3/4"	8 #14	PVC SCHEDULE 80	RIO-CHEM-B	LCP-52180	YSH-52180, YN-52180, YA-52180, YCH-52180
C-412	3/4"	8 #14	PVC SCHEDULE 80	RIO-CHEM-B	LCP-52190	YSH-52190, YN-52190, YA-52190, YCH-52190
C-413	3/4"	2 #14	PVC SCHEDULE 80	RIO-CHEM-B	FSL-52107	FAL-52107
C-414	3/4"	2 #14	PVC SCHEDULE 80	RIO-CHEM-B	FSL-52108	FAL-52108
C-415	3/4"	6 #14	PVC SCHEDULE 80	RIO-MCC-1D	LCS-53000	LAH-53012, LAH-53022, LAH-53101
C-416	3/4"	2 #14	PVC SCHEDULE 80	LCS-53000	LSH-53012	
C-417	3/4"	2 #14	PVC SCHEDULE 80	LCS-53000	LSH-53022	
C-418	3/4"	2 #14	RGS	RIO-CHEM-A	FSH-51004	FAH-51004
C-419	3/4"	6 #14	RGS	RIO-MCC-1D	MCC-1	YSH-53060, YAK-53060, YA-53060
C-420	1"	12 #14	PVC SCHEDULE 80	MCC-1	LCS-53060	
C-421	3/4"	2 #14	PVC SCHEDULE 80	LSH-53112	LCS-53060	FROM DAY TANK
C-422	3/4"	6 #14	RGS	RIO-MCC-1D	MCC-1	YSH-53070, YAK-53070, YA-53070

CABLE AND CONDUIT SCHEDULE - WEST PARISH WTF						
CONDUIT NO.	SIZE	CABLE	CONDUIT TYPE	FROM	TO	REMARKS
C-423	1"	12 #14	PVC SCHEDULE 80	MCC-1	LCS-53070	
C-424	3/4"	2 #14	PVC SCHEDULE 80	LSH-53112	LCS-53070	FROM DAY TANK
C-425	3/4"	2 #14	PVC SCHEDULE 80	RIO-CHEM-C	LSH-53101	LAH-53101
C-426	3/4"	2 #14	PVC SCHEDULE 80	RIO-CHEM-C	FSH-53102	FAH-53102
C-427	3/4"	2 #14	PVC SCHEDULE 80	RIO-CHEM-C	LSH-53112	LAH-53112
C-428	3/4"	8 #14	PVC SCHEDULE 80	RIO-CHEM-C	LCP-53120	YSH-53120, YN-53120, YA-53120, YCH-53120
C-429	3/4"	8 #14	PVC SCHEDULE 80	RIO-CHEM-C	LCP-53130	YSH-53130, YN-53130, YA-53130, YCH-53130
C-430	3/4"	8 #14	PVC SCHEDULE 80	RIO-CHEM-C	LCP-53140	YSH-53140, YN-53140, YA-53140, YCH-53140
C-431	3/4"	8 #14	PVC SCHEDULE 80	RIO-CHEM-C	LCP-53150	YSH-53150, YN-53150, YA-53150, YCH-53150
C-432	1"	12 #14	PVC SCHEDULE 80	RIO-MCC-1D	LCS-54000	LAH-54012, LAH-54022, LAH-54032, LAH-54042, LAH-54052, LAH-54101
C-433	3/4"	2 #14	PVC SCHEDULE 80	LCS-54000	LSH-54012	

CABLE AND CONDUIT SCHEDULE - WEST PARISH WTF						
CONDUIT NO.	SIZE	CABLE	CONDUIT TYPE	FROM	TO	REMARKS
C-434	3/4"	2 #14	PVC SCHEDULE 80	LCS-54000	LSH-54022	
C-435	3/4"	2 #14	PVC SCHEDULE 80	LCS-54000	LSH-54032	
C-436	3/4"	2 #14	PVC SCHEDULE 80	LCS-54000	LSH-54042	
C-437	3/4"	2 #14	PVC SCHEDULE 80	LCS-54000	LSH-54052	
C-438	3/4"	6 #14	RGS	RIO-MCC-1D	MCC-1	YSH-54060, YAK-54060, YA-54060
C-439	1"	12 #14	PVC SCHEDULE 80	MCC-1	LCS-54060	
C-440	3/4"	2 #14	PVC SCHEDULE 80	LSH-54112	LCS-54060	FROM DAY TANK
C-441	3/4"	6 #14	RGS	RIO-MCC-1D	MCC-1	YSH-54070, YAK-54070, YA-54070
C-442	1"	12 #14	PVC SCHEDULE 80	MCC-1	LCS-54070	
C-443	3/4"	2 #14	PVC SCHEDULE 80	LSH-54112	LCS-54070	FROM DAY TANK
C-444	3/4"	2 #14	PVC SCHEDULE 80	RIO-CHEM-A	LSH-54101	LAH-54101
C-445	3/4"	2 #14	PVC SCHEDULE 80	RIO-CHEM-A	FSH-54102	FAH-54102

CABLE AND CONDUIT SCHEDULE - WEST PARISH WTF						
CONDUIT NO.	SIZE	CABLE	CONDUIT TYPE	FROM	TO	REMARKS
C-446	3/4"	2 #14	PVC SCHEDULE 80	RIO-CHEM-A	LSH-54103	LAH-54103
C-447	3/4"	2 #14	PVC SCHEDULE 80	RIO-CHEM-A	FSH-54104	FAH-54104
C-448	3/4"	2 #14	PVC SCHEDULE 80	RIO-CHEM-A	LSH-54112	LAH-54112
C-449	3/4"	8 #14	PVC SCHEDULE 80	RIO-CHEM-A	LCP-54120	YSH-54120, YN-54120, YA-54120, YCH-54120
C-450	3/4"	8 #14	PVC SCHEDULE 80	RIO-CHEM-A	LCP-54130	YSH-54130, YN-54130, YA-54130, YCH-54130
C-451	3/4"	8 #14	PVC SCHEDULE 80	RIO-CHEM-A	LCP-54140	YSH-54140, YN-54140, YA-54140, YCH-54140
C-452	3/4"	8 #14	PVC SCHEDULE 80	RIO-CHEM-A	LCP-54150	YSH-54150, YN-54150, YA-54150, YCH-54150
C-453	3/4"	4 #14	PVC COATED RGS	LCS-55112	MX-55112	
C-454	3/4"	2 #14	PVC COATED RGS	RIO-CHEM-B	LSH-55101	LAH-55101
C-455	3/4"	4 #14	PVC COATED RGS	LCS-55117	MX-55117	
C-456	3/4"	2 #14	PVC COATED RGS	RIO-CHEM-B	FSH-55102	FAH-55102

CABLE AND CONDUIT SCHEDULE - WEST PARISH WTF						
CONDUIT NO.	SIZE	CABLE	CONDUIT TYPE	FROM	TO	REMARKS
C-457	3/4"	8 #14	PVC COATED RGS	RIO-CHEM-B	SKID-55120	YSH-55120, YN-55120, YA-55120, YCH-55120
C-458	3/4"	8 #14	PVC COATED RGS	RIO-CHEM-B	SKID-55130	YSH-55130, YN-55130, YA-55130, YCH-55130
C-459	3/4"	6 #14	PVC COATED RGS	RIO-MCC-1D	LCS-56000	LAH-56012, LAH-56022, LAH-56101
C-460	3/4"	2 #14	PVC COATED RGS	LCS-56000	LSH-56012	
C-461	3/4"	2 #14	PVC COATED RGS	LCS-56000	LSH-56022	
C-462	3/4"	6 #14	RGS	RIO-MCC-1D	MCC-1	YSH-56060, YAK-56060, YA-56060
C-463	1"	12 #14	PVC COATED RGS	MCC-1	LCS-56060	
C-464	3/4"	2 #14	PVC COATED RGS	LSH-56112	LCS-56060	FROM DAY TANK
C-465	3/4"	6 #14	RGS	RIO-MCC-1D	MCC-1	YSH-56070, YAK-56070, YA-56070
C-466	1"	12 #14	PVC COATED RGS	MCC-1	LCS-56070	
C-467	3/4"	2 #14	PVC COATED RGS	LSH-56112	LCS-56070	FROM DAY TANK
C-468	3/4"	2 #14	PVC COATED RGS	RIO-CHEM-B	LSH-56101	LAH-56101

CABLE AND CONDUIT SCHEDULE - WEST PARISH WTF						
CONDUIT NO.	SIZE	CABLE	CONDUIT TYPE	FROM	TO	REMARKS
C-469	3/4"	2 #14	PVC COATED RGS	RIO-CHEM-B	LSH-56112	LAH-56112
C-470	3/4"	2 #14	PVC COATED RGS	RIO-CHEM-B	FSH-56102	FAH-56102
C-471	3/4"	8 #14	PVC COATED RGS	RIO-CHEM-B	SKID-56120	YSH-56120, YN-56120, YA-56120, YCH-56120
C-472	3/4"	8 #14	PVC COATED RGS	RIO-CHEM-B	SKID-56130	YSH-56130, YN-56130, YA-56130, YCH-56130
C-473	1"	SINGLE MODE FIBER	RGS	PLC-BOP	EXISTING GENERATOR	YLR-70501, XA-70501, YA-70501, XI-70501
C-474	1"	6 #14	RGS	RIO-MCC-1D	BKR-70510	ZSC-70510, ZSO-70510, YA-70510
C-475	1"	CAT6 CABLE	RGS	PLC-BOP	STANDBY GENERATOR	YLR-70520, XA-70520, YA-70520, XI-70520
C-476	1"	CAT6 CABLE	RGS	STANDBY GENERATOR	ELECTRICAL SYSTEM MONITORING	
C-477	1"	CAT6 CABLE	RGS	ELECTRICAL SYSTEM MONITORING	CONTROL ROOM ELECTRICAL SYSTEM MONITORING STATION	
C-478	1"	CAT6 CABLE	RGS	PLC-BOP	ELECTRICAL SYSTEM MONITORING	ZSC-70550, ZSO-70550, YA-70550, ZC-70550
C-479	1"	CAT6 CABLE	RGS	PLC-BOP	ELECTRICAL SYSTEM MONITORING	ZSC-70560, ZSO-70560, YA-70560, ZC-70560
C-480	1"	CAT6 CABLE	RGS	ELECTRICAL SYSTEM MONITORING	SWGR-70550 (SWGR NO. 1)	ZSC-70550, ZSO-70550, YA-70550, ZC-70550
C-481	1"	CAT6 CABLE	RGS	ELECTRICAL SYSTEM MONITORING	SWGR-70560 (SWGR NO. 2)	ZSC-70560, ZSO-70560, YA-70560, ZC-70560

CABLE AND CONDUIT SCHEDULE - WEST PARISH WTF						
CONDUIT NO.	SIZE	CABLE	CONDUIT TYPE	FROM	TO	REMARKS
C-482	3/4"	10 #14	RGS	PLC-BOP	UPS-ADM	EA-70551, YA-70551, JA-70551, ZA-70551, XA-70551
C-483	3/4"	2 #14	RGS	RIO-DAF-B2	LSH-70730	LAH-70730
C-484	3/4"	2 #14	RGS	HV-01 VCP	FACP	REFER TO H-DRAWINGS (DWG H-003) FOR BLOCK DIAGRAMS
C-485	3/4"	2 #14	RGS	DDC-01	FACP	REFER TO H-DRAWINGS (DWG H-003) FOR BLOCK DIAGRAMS
C-486	3/4"	2 #14	RGS	HV-02 VCP	FACP	REFER TO H-DRAWINGS (DWG H-003) FOR BLOCK DIAGRAMS
C-487	3/4"	2 #14	RGS	BCU-01 VCP	FACP	REFER TO H-DRAWINGS (DWG H-003) FOR BLOCK DIAGRAMS
C-488	3/4"	2 #14	RGS	DDC-02	FACP	REFER TO H-DRAWINGS (DWG H-003) FOR BLOCK DIAGRAMS
C-489	3/4"	2 #14	RGS	DHU-01 VCP	FACP	REFER TO H-DRAWINGS (DWG H-003) FOR BLOCK DIAGRAMS
C-490	3/4"	2 #14	RGS	SF-01 EC CONTROLLER	FACP	REFER TO H-DRAWINGS (DWG H-003) FOR BLOCK DIAGRAMS
C-491	3/4"	2 #14	RGS	DDC-03	FACP	REFER TO H-DRAWINGS (DWG H-003) FOR BLOCK DIAGRAMS
C-492	3/4"	2 #14	RGS	HV-03 VCP	FACP	REFER TO H-DRAWINGS (DWG H-003) FOR BLOCK DIAGRAMS
C-493	3/4"	2 #14	RGS	DDC-04	FACP	REFER TO H-DRAWINGS (DWG H-003) FOR BLOCK DIAGRAMS
C-494	3/4"	CAT6 CABLE	RGS	DDC-04	VFD-EF-01	REFER TO H-DRAWINGS (DWG H-003) FOR BLOCK DIAGRAMS
C-495	3/4"	CAT6 CABLE	RGS	DDC-04	VFD-EF-02	REFER TO H-DRAWINGS (DWG H-003) FOR BLOCK DIAGRAMS
C-496	3/4"	CAT6 CABLE	RGS	DDC-04	VFD-EF-03	REFER TO H-DRAWINGS (DWG H-003) FOR BLOCK DIAGRAMS
C-497	3/4"	CAT6 CABLE	RGS	DDC-04	VFD-EF-04	REFER TO H-DRAWINGS (DWG H-003) FOR BLOCK DIAGRAMS

CABLE AND CONDUIT SCHEDULE - WEST PARISH WTF						
CONDUIT NO.	SIZE	CABLE	CONDUIT TYPE	FROM	TO	REMARKS
C-498	3/4"	CAT6 CABLE	RGS	DDC-04	VFD-EF-05	REFER TO H-DRAWINGS (DWG H-003) FOR BLOCK DIAGRAMS
C-499	3/4"	CAT6 CABLE	RGS	DDC-01	VFD-EF-06	REFER TO H-DRAWINGS (DWG H-003) FOR BLOCK DIAGRAMS
C-500	3/4"	CAT6 CABLE	RGS	DDC-01	VFD-EF-07	REFER TO H-DRAWINGS (DWG H-003) FOR BLOCK DIAGRAMS
C-501	3/4"	CAT6 CABLE	RGS	DDC-01	VFD-EF-08	REFER TO H-DRAWINGS (DWG H-003) FOR BLOCK DIAGRAMS
C-502	3/4"	CAT6 CABLE	RGS	DDC-02	VFD-EF-09	REFER TO H-DRAWINGS (DWG H-003) FOR BLOCK DIAGRAMS
C-503	3/4"	2 #14	RGS	DDC-04	VFD-EF-01	REFER TO H-DRAWINGS (DWG H-003) FOR BLOCK DIAGRAMS
C-504	3/4"	2 #14	RGS	DDC-04	VFD-EF-02	REFER TO H-DRAWINGS (DWG H-003) FOR BLOCK DIAGRAMS
C-505	3/4"	2 #14	RGS	DDC-04	VFD-EF-03	REFER TO H-DRAWINGS (DWG H-003) FOR BLOCK DIAGRAMS
C-506	3/4"	2 #14	RGS	DDC-04	VFD-EF-04	REFER TO H-DRAWINGS (DWG H-003) FOR BLOCK DIAGRAMS
C-507	3/4"	2 #14	RGS	DDC-04	VFD-EF-05	REFER TO H-DRAWINGS (DWG H-003) FOR BLOCK DIAGRAMS
C-508	3/4"	2 #14	RGS	DDC-01	VFD-EF-06	REFER TO H-DRAWINGS (DWG H-003) FOR BLOCK DIAGRAMS
C-509	3/4"	2 #14	RGS	DDC-01	VFD-EF-07	REFER TO H-DRAWINGS (DWG H-003) FOR BLOCK DIAGRAMS
C-510	3/4"	2 #14	RGS	DDC-01	VFD-EF-08	REFER TO H-DRAWINGS (DWG H-003) FOR BLOCK DIAGRAMS
C-511	3/4"	2 #14	RGS	DDC-02	VFD-EF-09	REFER TO H-DRAWINGS (DWG H-003) FOR BLOCK DIAGRAMS
C-512	3/4"	8 #14	RGS	DDC-02	EF-10	REFER TO H-DRAWINGS (DWG H-003) FOR BLOCK DIAGRAMS
C-513	3/4"	8 #14	RGS	DDC-02	EF-11	REFER TO H-DRAWINGS (DWG H-003) FOR BLOCK DIAGRAMS

CABLE AND CONDUIT SCHEDULE - WEST PARISH WTF						
CONDUIT NO.	SIZE	CABLE	CONDUIT TYPE	FROM	TO	REMARKS
C-514	3/4"	8 #14	RGS	DDC-02	EF-12	REFER TO H-DRAWINGS (DWG H-003) FOR BLOCK DIAGRAMS
C-515	3/4"	2 #14	RGS	DDC-03	COMP-1	REFER TO H-DRAWINGS (DWG H-003) FOR BLOCK DIAGRAMS
C-516	3/4"	2 #14	RGS	DDC-03	COMP-2	REFER TO H-DRAWINGS (DWG H-003) FOR BLOCK DIAGRAMS
C-517	3/4"	CAT6 CABLE	RGS	DDC-7	WH-10 VCP	REFER TO H-DRAWINGS (DWG H-003) FOR BLOCK DIAGRAMS
DWB & WWT C&C						
C-518	1"	SINGLE MODE FIBER	RGS	PLC-BOP	RIO-RESIDUALS	
C-519	1"	SINGLE MODE FIBER	RGS	RIO-RESIDUALS	OWS-RESID	
C-520	1"	12 #14	RGS	RIO-RESIDUALS	MOV-60115	ZSH-60115, ZSL-60115, YN-60115, YA-60115, ZCH-60115, ZCL-60115
C-521	3/4"	2 #14	RGS	RIO-RESIDUALS	LSH-60112	
C-522	3/4"	10 #14	RGS	RIO-RESIDUALS	MCC-4	YSH-60130, YN-60130, YA-60130, YCH-60130, YAK-60130
C-523	3/4"	10 #14	RGS	MCC-4	LCS-60130	
C-524	3/4"	2 #14	RGS	CENT-60210	VFD-60140	FROM DEWATERING CENTRIFUGE NO.1
C-525	3/4"	2 #14	RGS	RIO-RESIDUALS	PSL-60141	
C-526	3/4"	2 #14	RGS	RIO-RESIDUALS	LSL-60112	
C-527	1"	12 #14	RGS	VFD-60140	LCS-60140	
C-528	3/4"	2 #14	RGS	LCS-60140	TSH-60140	
C-529	3/4"	2 #14	RGS	RIO-RESIDUALS	PSH-60142	
C-530	1"	12 #14	RGS	RIO-RESIDUALS	MOV-60125	ZSH-60125, ZSL-60125, YN-60125, YA-60125, ZCH-60125, ZCL-60125

CABLE AND CONDUIT SCHEDULE - WEST PARISH WTF						
CONDUIT NO.	SIZE	CABLE	CONDUIT TYPE	FROM	TO	REMARKS
C-531	3/4"	2 #14	RGS	RIO-RESIDUALS	LSH-60122	
C-532	3/4"	10 #14	RGS	RIO-RESIDUALS	MCC-4	YSH-60150, YN-60150, YA-60150, YCH-60150, YAK-60150
C-533	3/4"	10 #14	RGS	MCC-4	LCS-60150	
C-534	3/4"	2 #14	RGS	CENT-60220	VFD-60160	FROM DEWATERING CENTRIFUGE NO.2
C-535	3/4"	2 #14	RGS	RIO-RESIDUALS	PSL-60161	
C-536	1"	12 #14	RGS	VFD-60160	LCS-60160	
C-537	3/4"	2 #14	RGS	LCS-60160	TSH-60160	
C-538	3/4"	2 #14	RGS	LCS-60160	LSL-60122	
C-539	3/4"	2 #14	RGS	RIO-RESIDUALS	PSH-60162	
C-540	1 1/2"	SINGLE MODE FIBER	RGS	RIO-RESIDUALS	CENT-60210	
C-541	1 1/2"	SINGLE MODE FIBER	RGS	RIO-RESIDUALS	CENT-60220	
C-542	3/4"	2 #14	RGS	RIO-RESIDUALS	FSH-60301	FAH-60301
C-543	3/4"	2 #14	RGS	CENT-60210	LCP-60300	
C-544	3/4"	2 #14	RGS	CENT-60220	LCP-60300	
C-545	3/4"	2 #14	RGS	LCP-60300	YSK-60321	
C-546	3/4"	2 #14	RGS	LCP-60300	YSK-60311	
C-547	3/4"	2 #14	RGS	LCP-60300	YSK-60301	
C-548	3/4"	2 #14	RGS	LCP-60300	YSK-60302	
C-549	3/4"	2 #14	RGS	LCP-60300	SSL-60312	
C-550	3/4"	2 #14	RGS	LCP-60300	SSL-60320	
C-551	3/4"	2 #14	RGS	LCP-60300	CONV-60300	
C-552	3/4"	2 #14	RGS	LCP-60300	MOV-60311	
C-553	3/4"	2 #14	RGS	LCP-60300	MOV-60321	
C-554	3/4"	2 #14	RGS	LCP-60300	MOV-60312	

CABLE AND CONDUIT SCHEDULE - WEST PARISH WTF						
CONDUIT NO.	SIZE	CABLE	CONDUIT TYPE	FROM	TO	REMARKS
C-555	3/4"	2 #14	RGS	LCP-60300	MOV-60322	
C-556	3/4"	2 #14	RGS	LCP-60300	CONV-60310	
C-557	3/4"	2 #14	RGS	LCP-60300	CONV-60320	
C-558	3/4"	2 #14	RGS	RIO-RESIDUALS	FSH-60401	FAH-60401
C-559	3/4"	4 #14	RGS	LCS-60425	MX-60425	
C-560	3/4"	4 #14	RGS	LCS-60425	MX-60465	
C-561	3/4"	8 #14	RGS	RIO-RESIDUALS	SKID-60430	YSH-60430, YN-60430, YA-60430, YCH-60430
C-562	3/4"	2 #14	RGS	CENT-60210	SKID-60430	FROM DEWATERING CENTRIFUGE NO.1
C-563	3/4"	8 #14	RGS	RIO-RESIDUALS	SKID-60470	YSH-60470, YN-60470, YA-60470, YCH-60470
C-564	3/4"	2 #14	RGS	CENT-60220	SKID-60470	FROM DEWATERING CENTRIFUGE NO.2
C-565	3/4"	10 #14	RGS	RIO-RESIDUALS	VFD-60510	YSH-60510, YN-60510, YA-60510, YCH-60510, YAK-60510
C-566	1"	12 #14	RGS	VFD-60510	LCS-60510	
C-567	3/4"	2 #14	RGS	LCS-60510	TSH-60510	
C-568	3/4"	2#14	RGS	LCS-60510	LSLL-60504	
C-569	3/4"	10 #14	RGS	RIO-RESIDUALS	VFD-60520	YSH-60520, YN-60520, YA-60520, YCH-60520, YAK-60520
C-570	1"	12 #14	RGS	VFD-60520	LCS-60520	
C-571	3/4"	2 #14	RGS	LCS-60520	TSH-60520	
C-572	3/4"	2#14	RGS	LCS-60520	LSLL-60504	
C-573	3/4"	2 #14	RGS	RIO-RESIDUALS	LSH-60503	
C-574	1"	10 #14	RGS	RIO-RESIDUALS	MCC-4	YSH-60530, YN-60530, YA-60530, YCH-60530, YAK-60530
C-575	1"	10 #14	RGS	MCC-4	LCS-60530	
C-576	1"	10 #14	RGS	RIO-RESIDUALS	MCC-4	YSH-60540, YN-60540, YA-60540, YCH-60540, YAK-60540

CABLE AND CONDUIT SCHEDULE - WEST PARISH WTF						
CONDUIT NO.	SIZE	CABLE	CONDUIT TYPE	FROM	TO	REMARKS
C-577	1"	10 #14	RGS	MCC-4	LCS-60540	
C-578	1"	10 #14	PVC COATED RGS	RIO-RESIDUALS	VFD-46010	YSH-46010, YN-46010, YA-46010, YCH-46010, YAK-46010
C-579	1"	12 #14	PVC COATED RGS	VFD-46010	LCS-46010	
C-580	1"	2 #14	PVC COATED RGS	LCS-46010	TSH-46010	
C-581	1"	2 #14	PVC COATED RGS	LCS-46010	LSLL-46013	
C-582	1"	10 #14	PVC COATED RGS	RIO-RESIDUALS	VFD-46020	YSH-46020, YN-46020, YA-46020, YCH-46020, YAK-46020
C-583	1"	12 #14	PVC COATED RGS	VFD-46020	LCS-46020	
C-584	1"	2 #14	PVC COATED RGS	LCS-46020	TSH-46020	
C-584.1	1"	2 #14	PVC COATED RGS	LCS-46020	LSLL-46013	
C-585	1"	10 #14	PVC COATED RGS	RIO-RESIDUALS	MCC-4	YSH-46050, YN-46050, YA-46050, YCH-46050, YAK-46050
C-586	1"	10 #14	PVC COATED RGS	MCC-4	LCS-46050	

CABLE AND CONDUIT SCHEDULE - WEST PARISH WTF						
CONDUIT NO.	SIZE	CABLE	CONDUIT TYPE	FROM	TO	REMARKS
C-587	1"	2 #14	PVC COATED RGS	RIO-RESIDUALS	LSH-46012	LAH-46012
C-588	1"	4 #14	PVC COATED RGS	RIO-RESIDUALS	ZSO-46070/SLG-46070	ZSH-46070, ZSL-46070
C-589	1"	4 #14	PVC COATED RGS	RIO-RESIDUALS	ZSC-46070/SLG-46070	ZSH-46070, ZSL-46070
C-590	1"	2 #14	PVC COATED RGS	RIO-RESIDUALS	LSH-46022	LAH-46022
C-591	1"	10 #14	PVC COATED RGS	RIO-RESIDUALS	MCC-4	YSH-46060, YN-46060, YA-46060, YCH-46060, YAK-46060
C-592	1"	10 #14	PVC COATED RGS	MCC-4	LCS-46060	
C-593	1"	10 #14	PVC COATED RGS	RIO-RESIDUALS	VFD-46030	YSH-46030, YN-46030, YA-46030, YCH-46030, YAK-46030
C-594	1"	12 #14	PVC COATED RGS	VFD-46030	LCS-46030	
C-595	1"	2 #14	PVC COATED RGS	LCS-46030	TSH-46030	
C-595.1	1"	2 #14	PVC COATED RGS	LCS-46030	LSLL-46023	
C-596	1"	10 #14	PVC COATED RGS	RIO-RESIDUALS	VFD-46040	YSH-46040, YN-46040, YA-46040, YCH-46040, YAK-46040

CABLE AND CONDUIT SCHEDULE - WEST PARISH WTF						
CONDUIT NO.	SIZE	CABLE	CONDUIT TYPE	FROM	TO	REMARKS
C-597	1"	12 #14	PVC COATED RGS	VFD-46040	LCS-46040	
C-598	1"	2 #14	PVC COATED RGS	LCS-46040	TSH-46040	
C-599	1"	2 #14	PVC COATED RGS	LCS-46040	LSLL-46023	
C-600	3/4"	6 #14	RGS	RIO-DAF-A2	FCV-46001	ZSL-46001, YN-46001, YA-46001
C-601	3/4"	2 #14	RGS	FCV-46001	LCS-46001	
C-602	3/4"	6 #14	RGS	RIO-DAF-B2	FCV-46002	ZSL-46002, YN-46002, YA-46002
C-603	3/4"	2 #14	RGS	FCV-46002	LCS-46002	
C-604	3/4"	6 #14	RGS	RIO-DAF-A2	FCV-60504	ZSL-60504, YN-60504, YA-60504
C-605	3/4"	2 #14	RGS	FCV-60504	LCS-60504	
C-606	3/4"	6 #14	RGS	RIO-DAF-B2	FCV-60505	ZSL-60505, YN-60505, YA-60505
C-607	3/4"	2 #14	RGS	FCV-60505	LCS-60505	
C-608	3/4"	2 #14	RGS	HV-04 VCP	FACP	REFER TO H-DRAWINGS (DWG H-003) FOR BLOCK DIAGRAMS
C-609	3/4"	2 #14	RGS	DDC-08	FACP	REFER TO H-DRAWINGS (DWG H-003) FOR BLOCK DIAGRAMS
C-610	3/4"	CAT6 CABLE	RGS	DDC-08	VFD-EF-13	REFER TO H-DRAWINGS (DWG H-003) FOR BLOCK DIAGRAMS
C-611	3/4"	CAT6 CABLE	RGS	DDC-08	VFD-EF-14	REFER TO H-DRAWINGS (DWG H-003) FOR BLOCK DIAGRAMS
C-612	3/4"	2 #14	RGS	DDC-08	VFD-EF-13	REFER TO H-DRAWINGS (DWG H-003) FOR BLOCK DIAGRAMS
C-613	3/4"	2 #14	RGS	DDC-08	VFD-EF-14	REFER TO H-DRAWINGS (DWG H-003) FOR BLOCK DIAGRAMS
C-614	3/4"	8 #14	RGS	DDC-08	EF-15	REFER TO H-DRAWINGS (DWG H-003) FOR BLOCK DIAGRAMS

CABLE AND CONDUIT SCHEDULE - WEST PARISH WTF						
CONDUIT NO.	SIZE	CABLE	CONDUIT TYPE	FROM	TO	REMARKS
C-615	3/4"	8 #14	RGS	DDC-08	EF-16	REFER TO H-DRAWINGS (DWG H-003) FOR BLOCK DIAGRAMS
C-616	3/4"	6 #14	RGS	DDC-14	SP-02 VCP	REFER TO H-DRAWINGS (DWG H-003) FOR BLOCK DIAGRAMS
C-617	3/4"	CAT6 CABLE	RGS	DDC-16	WH-09 VCP	REFER TO H-DRAWINGS (DWG H-003) FOR BLOCK DIAGRAMS
BACKWASH FACILITY C&C						
C-618	1"	12 #14	RGS	PLC-CLEARWELL-CP	MOV-81050	ZSH-81050, ZSL-81050, YN-81050, YA-81050, ZCH-81050, ZCL-81050
C-619	3/4"	6 #14	RGS	PLC-CLEARWELL-CP	FCV-81060	ZSL-81060, YN-81060, YA-81060
C-620	3/4"	8 #14	RGS	PLC-CLEARWELL-CP	LCP-70360	YSH-70360, YN-70360, YA-70360, YCH-70360
C-621	3/4"	8 #14	RGS	PLC-CLEARWELL-CP	LCP-70370	YSH-70370, YN-70370, YA-70370, YCH-70370

CABLE AND CONDUIT SCHEDULE - WEST PARISH WTF						
CONDUIT NO.	SIZE	CABLE	CONDUIT TYPE	FROM	TO	REMARKS
ADMIN C&C						
I-001	1"	CAT6 CABLE	RGS	PLC-BOP	ELECTRICAL SYSTEM MONITORING	JI-70511, JI-70512
I-002	1"	CAT6 CABLE	RGS	PLC-BOP	ELECTRICAL SYSTEM MONITORING	JI-70521, JI-70522
I-003	1"	CAT6 CABLE	RGS	PLC-BOP	ELECTRICAL SYSTEM MONITORING	JI-70531, JI-70532

CABLE AND CONDUIT SCHEDULE - WEST PARISH WTF						
CONDUIT NO.	SIZE	CABLE	CONDUIT TYPE	FROM	TO	REMARKS
I-004	1"	CAT6 CABLE	RGS	PLC-BOP	ELECTRICAL SYSTEM MONITORING	JI-70541, JI-70542
I-005	3/4"	2/C #16TSH	RGS	LOCAL-BOP	LCS-70740	LI-70741
I-006	1"	2/C #16TSH	PVC SCHEDULE 40	LCS-70740	LIT-70741	VIA HH #2A
I-007	3/4"	2/C #16TSH	RGS	DDC-11	VFD-CWP-01	REFER TO H-DRAWINGS (DWG H-003) FOR BLOCK DIAGRAMS
I-008	3/4"	2/C #16TSH	RGS	DDC-11	VFD-CWP-02	REFER TO H-DRAWINGS (DWG H-003) FOR BLOCK DIAGRAMS
I-009	3/4"	2/C #16TSH	RGS	DDC-06	VFD-EF-19	REFER TO H-DRAWINGS (DWG H-003) FOR BLOCK DIAGRAMS
TB C&C						
I-010	1"	CAT6 CABLE	RGS	ELECTRICAL SYSTEM MONITORING	MCC-1	JI-70511, JI-70512
I-011	1"	CAT6 CABLE	RGS	ELECTRICAL SYSTEM MONITORING	MCC-2	JI-70521, JI-70522
I-012	1"	CAT6 CABLE	RGS	ELECTRICAL SYSTEM MONITORING	MCC-3	JI-70531, JI-70532
I-013	3/4"	2/C #16TSH	RGS	RIO-DAF-A2	AIT-10311	AI-10311
I-014	3/4"	MANF. PROV. CABLE	RGS	AIT-10311	AE-10311	
I-015	1"	2/C 2#16TSH	RGS	RIO-DAF-A2	AIT-10312	AI-10312, TI-10312

CABLE AND CONDUIT SCHEDULE - WEST PARISH WTF						
CONDUIT NO.	SIZE	CABLE	CONDUIT TYPE	FROM	TO	REMARKS
I-016	3/4"	MANF. PROV. CABLE	RGS	AIT-10312	AE-10312	
I-017	3/4"	2/C #16TSH	RGS	RIO-DAF-B2	AIT-10331	AI-10331
I-018	3/4"	MANF. PROV. CABLE	RGS	AIT-10331	AE-10331	
I-019	1"	2/C 2#16TSH	RGS	RIO-DAF-B2	AIT-10332	AI-10332, TI-10332
I-020	3/4"	MANF. PROV. CABLE	RGS	AIT-10332	AE-10332	
I-021	3/4"	2/C #16TSH	RGS	RIO-DAF-A2	FIT-10111	FI-10111
I-022	3/4"	MANF. PROV. CABLE	RGS	FIT-10111	FE-10111	
I-023	1"	2/C 2#16TSH	RGS	RIO-DAF-A2	FCV-10111	ZC-10111, ZI-10111
I-024	3/4"	2/C #16TSH	RGS	RIO-DAF-B2	FIT-10121	FI-10121
I-025	3/4"	MANF. PROV. CABLE	RGS	FIT-10121	FE-10121	
I-026	1"	2/C 2#16TSH	RGS	RIO-DAF-B2	FCV-10121	ZC-10121, ZI-10121
I-027	3/4"	2/C #16TSH	RGS	RIO-DAF-A2	AIT-10321	
I-028	3/4"	MANF. PROV. CABLE	RGS	AIT-10321	AE-10321	

CABLE AND CONDUIT SCHEDULE - WEST PARISH WTF						
CONDUIT NO.	SIZE	CABLE	CONDUIT TYPE	FROM	TO	REMARKS
I-029	1"	2/C 2#16TSH	RGS	RIO-DAF-A2	AIT-10322	AI-10322, TI-10322
I-030	3/4"	MANF. PROV. CABLE	RGS	AIT-10322	AE-10322	
I-031	3/4"	2/C #16TSH	RGS	RIO-DAF-B2	AIT-10341	
I-032	3/4"	MANF. PROV. CABLE	RGS	AIT-10341	AE-10341	
I-033	1"	2/C 2#16TSH	RGS	RIO-DAF-B2	AIT-10342	AI-10342, TI-10342
I-034	3/4"	MANF. PROV. CABLE	RGS	AIT-10342	AE-10342	
I-035	3/4"	2/C #16TSH	RGS	RIO-DAF-B2	LIT-10421	LI-10421
I-036	3/4"	2/C #16TSH	RGS	RIO-DAF-A2	LIT-10411	LI-10411
I-037	1"	2/C 2#16TSH	RGS	RIO-MCC-2A	VFD-20120	SI-B, SC-B
I-038	1"	2/C 2#16TSH	RGS	RIO-MCC-2A	VFD-20220	SI-B, SC-B
I-039	1"	2/C 2#16TSH	RGS	RIO-MCC-2A	VFD-20320	SI-B, SC-B
I-040	1"	2/C 2#16TSH	RGS	RIO-MCC-2A	VFD-20420	SI-B, SC-B
I-041	1"	2/C 2#16TSH	RGS	RIO-MCC-2A	VFD-20520	SI-B, SC-B
I-042	1"	2/C 2#16TSH	RGS	RIO-MCC-2A	VFD-20620	SI-B, SC-B
I-043	1"	2/C 2#16TSH	RGS	RIO-MCC-2A	VFD-20720	SI-B, SC-B

CABLE AND CONDUIT SCHEDULE - WEST PARISH WTF						
CONDUIT NO.	SIZE	CABLE	CONDUIT TYPE	FROM	TO	REMARKS
I-044	1"	2/C 2#16TSH	RGS	RIO-MCC-2A	VFD-20820	SI-B, SC-B
I-045	1"	2/C 2#16TSH	RGS	RIO-MCC-2A	VFD-20920	SI-B, SC-B
I-046	1"	2/C 2#16TSH	RGS	RIO-MCC-2A	VFD-21020	SI-B, SC-B
I-047	1"	2/C 2#16TSH	RGS	VFD-20120	FLOC-20120	
I-048	1"	2/C 2#16TSH	RGS	VFD-20220	FLOC-20220	
I-049	1"	2/C 2#16TSH	RGS	VFD-20320	FLOC-20320	
I-050	1"	2/C 2#16TSH	RGS	VFD-20420	FLOC-20420	
I-051	1"	2/C 2#16TSH	RGS	VFD-20520	FLOC-20520	
I-052	1"	2/C 2#16TSH	RGS	VFD-20620	FLOC-20620	
I-053	1"	2/C 2#16TSH	RGS	VFD-20720	FLOC-20720	
I-054	1"	2/C 2#16TSH	RGS	VFD-20820	FLOC-20820	
I-055	1"	2/C 2#16TSH	RGS	VFD-20920	FLOC-20920	
I-056	1"	2/C 2#16TSH	RGS	VFD-21020	FLOC-21020	
I-057	1"	2/C 2#16TSH	RGS	RIO-MCC-2A	VFD-20130	SI-C, SC-C
I-058	1"	2/C 2#16TSH	RGS	RIO-MCC-2A	VFD-20230	SI-C, SC-C
I-059	1"	2/C 2#16TSH	RGS	RIO-MCC-2A	VFD-20330	SI-C, SC-C

CABLE AND CONDUIT SCHEDULE - WEST PARISH WTF						
CONDUIT NO.	SIZE	CABLE	CONDUIT TYPE	FROM	TO	REMARKS
I-060	1"	2/C 2#16TSH	RGS	RIO-MCC-2A	VFD-20430	SI-C, SC-C
I-061	1"	2/C 2#16TSH	RGS	RIO-MCC-2A	VFD-20530	SI-C, SC-C
I-062	1"	2/C 2#16TSH	RGS	RIO-MCC-2A	VFD-20630	SI-C, SC-C
I-063	1"	2/C 2#16TSH	RGS	RIO-MCC-2A	VFD-20730	SI-C, SC-C
I-064	1"	2/C 2#16TSH	RGS	RIO-MCC-2A	VFD-20830	SI-C, SC-C
I-065	1"	2/C 2#16TSH	RGS	RIO-MCC-2A	VFD-20930	SI-C, SC-C
I-066	1"	2/C 2#16TSH	RGS	RIO-MCC-2A	VFD-21030	SI-C, SC-C
I-067	1"	2/C 2#16TSH	RGS	VFD-20130	FLOC-20130	
I-068	1"	2/C 2#16TSH	RGS	VFD-20230	FLOC-20230	
I-069	1"	2/C 2#16TSH	RGS	VFD-20330	FLOC-20330	
I-070	1"	2/C 2#16TSH	RGS	VFD-20430	FLOC-20430	
I-071	1"	2/C 2#16TSH	RGS	VFD-20530	FLOC-20530	
I-072	1"	2/C 2#16TSH	RGS	VFD-20630	FLOC-20630	
I-073	1"	2/C 2#16TSH	RGS	VFD-20730	FLOC-20730	
I-074	1"	2/C 2#16TSH	RGS	VFD-20830	FLOC-20830	
I-075	1"	2/C 2#16TSH	RGS	VFD-20930	FLOC-20930	

CABLE AND CONDUIT SCHEDULE - WEST PARISH WTF						
CONDUIT NO.	SIZE	CABLE	CONDUIT TYPE	FROM	TO	REMARKS
I-076	1"	2/C 2#16TSH	RGS	VFD-21030	FLOC-21030	
I-077	1"	2/C 2#16TSH	RGS	RIO-MCC-2A	VFD-30160	SI-C, SC-C
I-078	1"	2/C 2#16TSH	RGS	RIO-MCC-2A	VFD-30260	SI-C, SC-C
I-079	1"	2/C 2#16TSH	RGS	RIO-MCC-2A	VFD-30360	SI-C, SC-C
I-080	1"	2/C 2#16TSH	RGS	RIO-MCC-2A	VFD-30460	SI-C, SC-C
I-081	1"	2/C 2#16TSH	RGS	RIO-MCC-2A	VFD-30560	SI-C, SC-C
I-082	1"	2/C 2#16TSH	RGS	RIO-MCC-2A	VFD-30660	SI-C, SC-C
I-083	1"	2/C 2#16TSH	RGS	RIO-MCC-2A	VFD-30760	SI-C, SC-C
I-084	1"	2/C 2#16TSH	RGS	RIO-MCC-2A	VFD-30860	SI-C, SC-C
I-085	1"	2/C 2#16TSH	RGS	RIO-MCC-2A	VFD-30960	SI-C, SC-C
I-086	1"	2/C 2#16TSH	RGS	RIO-MCC-2A	VFD-31060	SI-C, SC-C
I-087	1"	2/C 2#16TSH	RGS	VFD-30160	SKMR-30160	
I-088	1"	2/C 2#16TSH	RGS	VFD-30260	SKMR-30260	
I-089	1"	2/C 2#16TSH	RGS	VFD-30360	SKMR-30360	
I-090	1"	2/C 2#16TSH	RGS	VFD-30460	SKMR-30460	
I-091	1"	2/C 2#16TSH	RGS	VFD-30560	SKMR-30560	

CABLE AND CONDUIT SCHEDULE - WEST PARISH WTF						
CONDUIT NO.	SIZE	CABLE	CONDUIT TYPE	FROM	TO	REMARKS
I-092	1"	2/C 2#16TSH	RGS	VFD-30660	SKMR-30660	
I-093	1"	2/C 2#16TSH	RGS	VFD-30760	SKMR-30760	
I-094	1"	2/C 2#16TSH	RGS	VFD-30860	SKMR-30860	
I-095	1"	2/C 2#16TSH	RGS	VFD-30960	SKMR-30960	
I-096	1"	2/C 2#16TSH	RGS	VFD-31060	SKMR-31060	
I-097	3/4"	2/C #16TSH	RGS	RIO-DAF-A2	LIT-30011	
I-098	3/4"	2/C #16TSH	RGS	RIO-DAF-B2	LIT-30021	
I-099	3/4"	2/C #16TSH	RGS	RIO-DAF-A2	AIT-30012	
I-100	3/4"	MANF. PROV. CABLE	RGS	AIT-30012	AE-30012	
I-101	3/4"	2/C #16TSH	RGS	RIO-DAF-B2	AIT-30022	
I-102	3/4"	MANF. PROV. CABLE	RGS	AIT-30022	AE-30022	
I-103	1"	2/C 2#16TSH	RGS	RIO-MCC-1A	VFD-33010	SI-33010, SC-33010
I-104	1"	2/C 2#16TSH	RGS	VFD-33010	LCS-33010	
I-105	1"	2/C 2#16TSH	RGS	RIO-MCC-1A	VFD-33020	SI-33020, SC-33020
I-106	1"	2/C 2#16TSH	RGS	VFD-33020	LCS-33020	

CABLE AND CONDUIT SCHEDULE - WEST PARISH WTF						
CONDUIT NO.	SIZE	CABLE	CONDUIT TYPE	FROM	TO	REMARKS
I-107	1"	2/C 2#16TSH	RGS	RIO-MCC-1A	VFD-33030	SI-33030, SC-33030
I-108	1"	2/C 2#16TSH	RGS	VFD-33030	LCS-33030	
I-109	1"	2/C 2#16TSH	RGS	RIO-MCC-1A	VFD-33040	SI-33040, SC-33040
I-110	1"	2/C 2#16TSH	RGS	VFD-33040	LCS-33040	
I-111	3/4"	2/C #16TSH	RGS	RIO-DAF-A2	PIT-33053	PI-33053
I-112	3/4"	2/C #16TSH	RGS	RIO-MCC-2A	PIT-34031	PG-34031
I-113	3/4"	2/C #16TSH	RGS	RIO-MCC-2A	PIT-34041	PG-34041
I-114	3/4"	2/C #16TSH	RGS	RIO-DAF-A2	FIT-34000	FI-34000
I-115	3/4"	MANF. PROV. CABLE	RGS	FIT-34000	FE-34000	
I-116	3/4"	2/C #16TSH	RGS	RIO-DAF-A2	FIT-34009	FI-34009
I-117	3/4"	2/C #16TSH	RGS	RIO-DAF-A2	LIT-34051	LI-34051
I-118	3/4"	MANF. PROV. CABLE	RGS	LIT-34051	LE-34051	
I-119	1"	2/C 2#16TSH	RGS	RIO-DAF-A2	LCV-34051	ZI-34051, ZC-34051
I-120	3/4"	2/C #16TSH	RGS	RIO-DAF-A2	PIT-34052	PG-34052
I-121	1"	2/C 2#16TSH	RGS	RIO-DAF-A2	MOV-34060	ZI-34060, ZC-34060

CABLE AND CONDUIT SCHEDULE - WEST PARISH WTF						
CONDUIT NO.	SIZE	CABLE	CONDUIT TYPE	FROM	TO	REMARKS
I-122	3/4"	2/C #16TSH	RGS	RIO-DAF-B2	LIT-34081	
I-123	3/4"	MANF. PROV. CABLE	RGS	LIT-34081	LE-34081	
I-124	1"	2/C 2#16TSH	RGS	RIO-DAF-B2	LCV-34081	ZI-34081, ZC-34081
I-125	3/4"	2/C #16TSH	RGS	RIO-DAF-B2	PIT-34082	PG-34082
I-126	1"	2/C 2#16TSH	RGS	RIO-DAF-B2	MOV-34090	ZI-34090, ZC-34090
I-127	3/4"	2/C #16TSH	RGS	RIO-DAF-A2	LIT-35011	
I-128	3/4"	2/C #16TSH	RGS	RIO-DAF-B2	LIT-35051	
I-129	3/4"	2/C #16TSH	RGS	RIO-FLT-A1	LIT-40101	LI-DD
I-130	3/4"	2/C #16TSH	RGS	RIO-FLT-A1	LIT-40201	LI-DD
I-131	3/4"	2/C #16TSH	RGS	RIO-FLT-A1	LIT-40301	LI-DD
I-132	3/4"	2/C #16TSH	RGS	RIO-FLT-A1	LIT-40401	LI-DD
I-133	3/4"	2/C #16TSH	RGS	RIO-FLT-A2	LIT-40501	LI-DD
I-134	3/4"	2/C #16TSH	RGS	RIO-FLT-A2	LIT-40601	LI-DD
I-135	3/4"	2/C #16TSH	RGS	RIO-FLT-A2	LIT-40701	LI-DD
I-136	3/4"	2/C #16TSH	RGS	RIO-FLT-B1	LIT-40801	LI-DD
I-137	3/4"	2/C #16TSH	RGS	RIO-FLT-B1	LIT-40901	LI-DD

CABLE AND CONDUIT SCHEDULE - WEST PARISH WTF						
CONDUIT NO.	SIZE	CABLE	CONDUIT TYPE	FROM	TO	REMARKS
I-138	3/4"	2/C #16TSH	RGS	RIO-FLT-B1	LIT-41001	LI-DD
I-139	3/4"	2/C #16TSH	RGS	RIO-FLT-B1	LIT-41101	LI-DD
I-140	3/4"	2/C #16TSH	RGS	RIO-FLT-B2	LIT-41201	LI-DD
I-141	3/4"	2/C #16TSH	RGS	RIO-FLT-B2	LIT-41301	LI-DD
I-142	3/4"	2/C #16TSH	RGS	RIO-FLT-B2	LIT-41401	LI-DD
I-143	1"	2/C 2#16TSH	RGS	RIO-FLT-A1	FCV-40100	ZCH-40100, ZI-40100
I-144	3/4"	2/C #16TSH	RGS	RIO-FLT-A1	PIT-40103	PI-FF
I-145	3/4"	2/C #16TSH	RGS	RIO-FLT-A1	PIT-40203	PI-FF
I-146	3/4"	2/C #16TSH	RGS	RIO-FLT-A1	PIT-40303	PI-FF
I-147	3/4"	2/C #16TSH	RGS	RIO-FLT-A1	PIT-40403	PI-FF
I-148	3/4"	2/C #16TSH	RGS	RIO-FLT-A2	PIT-40503	PI-FF
I-149	3/4"	2/C #16TSH	RGS	RIO-FLT-A2	PIT-40603	PI-FF
I-150	3/4"	2/C #16TSH	RGS	RIO-FLT-A2	PIT-40703	PI-FF
I-151	3/4"	2/C #16TSH	RGS	RIO-FLT-B1	PIT-40803	PI-FF
I-152	3/4"	2/C #16TSH	RGS	RIO-FLT-B1	PIT-40903	PI-FF
I-153	3/4"	2/C #16TSH	RGS	RIO-FLT-B1	PIT-41003	PI-FF

CABLE AND CONDUIT SCHEDULE - WEST PARISH WTF						
CONDUIT NO.	SIZE	CABLE	CONDUIT TYPE	FROM	TO	REMARKS
I-154	3/4"	2/C #16TSH	RGS	RIO-FLT-B1	PIT-41103	PI-FF
I-155	3/4"	2/C #16TSH	RGS	RIO-FLT-B2	PIT-41203	PI-FF
I-156	3/4"	2/C #16TSH	RGS	RIO-FLT-B2	PIT-41303	PI-FF
I-157	3/4"	2/C #16TSH	RGS	RIO-FLT-B2	PIT-41403	PI-FF
I-158	3/4"	2/C #16TSH	RGS	RIO-FLT-A1	AIT-40104	AI-JJ
I-159	3/4"	2/C #16TSH	RGS	RIO-FLT-A1	AIT-40204	AI-JJ
I-160	3/4"	2/C #16TSH	RGS	RIO-FLT-A1	AIT-40304	AI-JJ
I-161	3/4"	2/C #16TSH	RGS	RIO-FLT-A1	AIT-40404	AI-JJ
I-162	3/4"	2/C #16TSH	RGS	RIO-FLT-A2	AIT-40504	AI-JJ
I-163	3/4"	2/C #16TSH	RGS	RIO-FLT-A2	AIT-40604	AI-JJ
I-164	3/4"	2/C #16TSH	RGS	RIO-FLT-A2	AIT-40704	AI-JJ
I-165	3/4"	2/C #16TSH	RGS	RIO-FLT-B1	AIT-40804	AI-JJ
I-166	3/4"	2/C #16TSH	RGS	RIO-FLT-B1	AIT-40904	AI-JJ
I-167	3/4"	2/C #16TSH	RGS	RIO-FLT-B1	AIT-41004	AI-JJ
I-168	3/4"	2/C #16TSH	RGS	RIO-FLT-B1	AIT-41104	AI-JJ
I-169	3/4"	2/C #16TSH	RGS	RIO-FLT-B2	AIT-41204	AI-JJ

CABLE AND CONDUIT SCHEDULE - WEST PARISH WTF						
CONDUIT NO.	SIZE	CABLE	CONDUIT TYPE	FROM	TO	REMARKS
I-170	3/4"	2/C #16TSH	RGS	RIO-FLT-B2	AIT-41304	AI-JJ
I-171	3/4"	2/C #16TSH	RGS	RIO-FLT-B2	AIT-41404	AI-JJ
I-172	3/4"	MANF. PROV. CABLE	RGS	AIT-40104	AE-40104	
I-173	3/4"	MANF. PROV. CABLE	RGS	AIT-40204	AE-40204	
I-174	3/4"	MANF. PROV. CABLE	RGS	AIT-40304	AE-40304	
I-175	3/4"	MANF. PROV. CABLE	RGS	AIT-40404	AE-40404	
I-176	3/4"	MANF. PROV. CABLE	RGS	AIT-40504	AE-40504	
I-177	3/4"	MANF. PROV. CABLE	RGS	AIT-40604	AE-40604	
I-178	3/4"	MANF. PROV. CABLE	RGS	AIT-40704	AE-40704	
I-179	3/4"	MANF. PROV. CABLE	RGS	AIT-40804	AE-40804	
I-180	3/4"	MANF. PROV. CABLE	RGS	AIT-40904	AE-40904	

CABLE AND CONDUIT SCHEDULE - WEST PARISH WTF						
CONDUIT NO.	SIZE	CABLE	CONDUIT TYPE	FROM	TO	REMARKS
I-181	3/4"	MANF. PROV. CABLE	RGS	AIT-41004	AE-41004	
I-182	3/4"	MANF. PROV. CABLE	RGS	AIT-41104	AE-41104	
I-183	3/4"	MANF. PROV. CABLE	RGS	AIT-41204	AE-41204	
I-184	3/4"	MANF. PROV. CABLE	RGS	AIT-41304	AE-41304	
I-185	3/4"	MANF. PROV. CABLE	RGS	AIT-41404	AE-41404	
I-186	3/4"	2/C #16TSH	RGS	RIO-FLT-A1	FIT-40105	FI-LL
I-187	3/4"	2/C #16TSH	RGS	RIO-FLT-A1	FIT-40205	FI-LL
I-188	3/4"	2/C #16TSH	RGS	RIO-FLT-A1	FIT-40305	FI-LL
I-189	3/4"	2/C #16TSH	RGS	RIO-FLT-A1	FIT-40405	FI-LL
I-190	3/4"	2/C #16TSH	RGS	RIO-FLT-A2	FIT-40505	FI-LL
I-191	3/4"	2/C #16TSH	RGS	RIO-FLT-A2	FIT-40605	FI-LL
I-192	3/4"	2/C #16TSH	RGS	RIO-FLT-A2	FIT-40705	FI-LL
I-193	3/4"	2/C #16TSH	RGS	RIO-FLT-B1	FIT-40805	FI-LL
I-194	3/4"	2/C #16TSH	RGS	RIO-FLT-B1	FIT-40905	FI-LL

CABLE AND CONDUIT SCHEDULE - WEST PARISH WTF						
CONDUIT NO.	SIZE	CABLE	CONDUIT TYPE	FROM	TO	REMARKS
I-195	3/4"	2/C #16TSH	RGS	RIO-FLT-B1	FIT-41005	FI-LL
I-196	3/4"	2/C #16TSH	RGS	RIO-FLT-B1	FIT-41105	FI-LL
I-197	3/4"	2/C #16TSH	RGS	RIO-FLT-B2	FIT-41205	FI-LL
I-198	3/4"	2/C #16TSH	RGS	RIO-FLT-B2	FIT-41305	FI-LL
I-199	3/4"	2/C #16TSH	RGS	RIO-FLT-B2	FIT-41405	FI-LL
I-200	3/4"	MANF. PROV. CABLE	RGS	FIT-40105	FE-40105	
I-201	3/4"	MANF. PROV. CABLE	RGS	FIT-40205	FE-40205	
I-202	3/4"	MANF. PROV. CABLE	RGS	FIT-40305	FE-40305	
I-203	3/4"	MANF. PROV. CABLE	RGS	FIT-40405	FE-40405	
I-204	3/4"	MANF. PROV. CABLE	RGS	FIT-40505	FE-40505	
I-205	3/4"	MANF. PROV. CABLE	RGS	FIT-40605	FE-40605	
I-206	3/4"	MANF. PROV. CABLE	RGS	FIT-40705	FE-40705	

CABLE AND CONDUIT SCHEDULE - WEST PARISH WTF						
CONDUIT NO.	SIZE	CABLE	CONDUIT TYPE	FROM	TO	REMARKS
I-207	3/4"	MANF. PROV. CABLE	RGS	FIT-40805	FE-40805	
I-208	3/4"	MANF. PROV. CABLE	RGS	FIT-40905	FE-40905	
I-209	3/4"	MANF. PROV. CABLE	RGS	FIT-41005	FE-41005	
I-210	3/4"	MANF. PROV. CABLE	RGS	FIT-41105	FE-41105	
I-211	3/4"	MANF. PROV. CABLE	RGS	FIT-41205	FE-41205	
I-212	3/4"	MANF. PROV. CABLE	RGS	FIT-41305	FE-41305	
I-213	3/4"	MANF. PROV. CABLE	RGS	FIT-41405	FE-41405	
I-214	1"	2/C 2#16TSH	RGS	RIO-FLT-A1	MOV-40160	ZC-MM, ZI-MM
I-215	1"	2/C 2#16TSH	RGS	RIO-FLT-A1	MOV-40260	ZC-MM, ZI-MM
I-216	1"	2/C 2#16TSH	RGS	RIO-FLT-A1	MOV-40360	ZC-MM, ZI-MM
I-217	1"	2/C 2#16TSH	RGS	RIO-FLT-A1	MOV-40460	ZC-MM, ZI-MM
I-218	1"	2/C 2#16TSH	RGS	RIO-FLT-A2	MOV-40560	ZC-MM, ZI-MM
I-219	1"	2/C 2#16TSH	RGS	RIO-FLT-A2	MOV-40660	ZC-MM, ZI-MM

CABLE AND CONDUIT SCHEDULE - WEST PARISH WTF						
CONDUIT NO.	SIZE	CABLE	CONDUIT TYPE	FROM	TO	REMARKS
I-220	1"	2/C 2#16TSH	RGS	RIO-FLT-A2	MOV-40760	ZC-MM, ZI-MM
I-221	1"	2/C 2#16TSH	RGS	RIO-FLT-B1	MOV-40860	ZC-MM, ZI-MM
I-222	1"	2/C 2#16TSH	RGS	RIO-FLT-B1	MOV-40960	ZC-MM, ZI-MM
I-223	1"	2/C 2#16TSH	RGS	RIO-FLT-B1	MOV-41060	ZC-MM, ZI-MM
I-224	1"	2/C 2#16TSH	RGS	RIO-FLT-B1	MOV-41160	ZC-MM, ZI-MM
I-225	1"	2/C 2#16TSH	RGS	RIO-FLT-B2	MOV-41260	ZC-MM, ZI-MM
I-226	1"	2/C 2#16TSH	RGS	RIO-FLT-B2	MOV-41360	ZC-MM, ZI-MM
I-227	1"	2/C 2#16TSH	RGS	RIO-FLT-B2	MOV-41460	ZC-MM, ZI-MM
I-228	1"	2/C 2#16TSH	RGS	RIO-FLT-A1	MOV-40170	ZC-NN, ZI-NN
I-229	1"	2/C 2#16TSH	RGS	RIO-FLT-A1	MOV-40270	ZC-NN, ZI-NN
I-230	1"	2/C 2#16TSH	RGS	RIO-FLT-A1	MOV-40370	ZC-NN, ZI-NN
I-231	1"	2/C 2#16TSH	RGS	RIO-FLT-A1	MOV-40470	ZC-NN, ZI-NN
I-232	1"	2/C 2#16TSH	RGS	RIO-FLT-A2	MOV-40570	ZC-NN, ZI-NN
I-233	1"	2/C 2#16TSH	RGS	RIO-FLT-A2	MOV-40670	ZC-NN, ZI-NN
I-234	1"	2/C 2#16TSH	RGS	RIO-FLT-A2	MOV-40770	ZC-NN, ZI-NN
I-235	1"	2/C 2#16TSH	RGS	RIO-FLT-B1	MOV-40870	ZC-NN, ZI-NN

CABLE AND CONDUIT SCHEDULE - WEST PARISH WTF						
CONDUIT NO.	SIZE	CABLE	CONDUIT TYPE	FROM	TO	REMARKS
I-236	1"	2/C 2#16TSH	RGS	RIO-FLT-B1	MOV-40970	ZC-NN, ZI-NN
I-237	1"	2/C 2#16TSH	RGS	RIO-FLT-B1	MOV-41070	ZC-NN, ZI-NN
I-238	1"	2/C 2#16TSH	RGS	RIO-FLT-B1	MOV-41170	ZC-NN, ZI-NN
I-239	1"	2/C 2#16TSH	RGS	RIO-FLT-B2	MOV-41270	ZC-NN, ZI-NN
I-240	1"	2/C 2#16TSH	RGS	RIO-FLT-B2	MOV-41370	ZC-NN, ZI-NN
I-241	1"	2/C 2#16TSH	RGS	RIO-FLT-B2	MOV-41470	ZC-NN, ZI-NN
I-242	3/4"	2/C #16TSH	RGS	RIO-FLT-A2	AIT-42061	AI-42061
I-243	3/4"	MANF. PROV. CABLE	RGS	AIT-42061	AE-42061	
I-244	3/4"	2/C #16TSH	RGS	RIO-FLT-B2	AIT-42062	AI-42062
I-245	3/4"	MANF. PROV. CABLE	RGS	AIT-42062	AE-42062	
I-246	3/4"	2/C #16TSH	RGS	RIO-FLT-A2	AIT-42041	AI-42041
I-247	3/4"	MANF. PROV. CABLE	RGS	AIT-42041	AE-42041	
I-248	3/4"	2/C #16TSH	RGS	RIO-FLT-B2	AIT-42042	AI-42042
I-249	3/4"	MANF. PROV. CABLE	RGS	AIT-42042	AE-42042	

CABLE AND CONDUIT SCHEDULE - WEST PARISH WTF						
CONDUIT NO.	SIZE	CABLE	CONDUIT TYPE	FROM	TO	REMARKS
I-250	3/4"	2/C #16TSH	RGS	RIO-FLT-A2	LIT-42031	LI-42031
I-251	3/4"	2/C #16TSH	RGS	RIO-FLT-B2	LIT-42032	LI-42032
I-252	3/4"	2/C #16TSH	RGS	RIO-FLT-A2	LIT-42033	LI-42033
I-253	3/4"	2/C #16TSH	RGS	RIO-FLT-B2	LIT-42034	LI-42034
I-254	3/4"	2/C #16TSH	RGS	RIO-WQSB	AX-43061	AI-43061
I-255	3/4"	MANF. PROV. CABLE	RGS	AIX43061	AE-43061	
I-256	3/4"	2/C #16TSH	RGS	RIO-WQSB	AX-43062	AI-43062
I-257	3/4"	MANF. PROV. CABLE	RGS	AX-43062	AE-43062	
I-258	3/4"	2/C #16TSH	RGS	RIO-WQSB	AX-43063	AI-43063
I-259	3/4"	MANF. PROV. CABLE	RGS	AX-43063	AE-43063	
I-260	3/4"	2/C #16TSH	RGS	RIO-WQTH	AX-43051	AI-43051
I-261	3/4"	MANF. PROV. CABLE	RGS	AX-43051	AE-43051	
I-262	3/4"	2/C #16TSH	RGS	RIO-WQTH	AX-43052	AI-43052
I-263	3/4"	MANF. PROV. CABLE	RGS	AX-43052	AE-43052	

CABLE AND CONDUIT SCHEDULE - WEST PARISH WTF						
CONDUIT NO.	SIZE	CABLE	CONDUIT TYPE	FROM	TO	REMARKS
I-264	3/4"	2/C #16TSH	RGS	RIO-WQTH	AX-43053	AI-43053
I-265	3/4"	MANF. PROV. CABLE	RGS	AX-43053	AE-43053	
I-266	3/4"	2/C #16TSH	RGS	RIO-MCC-2A	FIT-45001	FI-45001
I-267	1 1/2"	2/C 4#16TSH	PVC COATED RGS	RIO-CHEM-A	LCS-51000	LI-51011, LI-51021, LI-51031, LI-51041
I-268	3/4"	2/C #16TSH	PVC COATED RGS	LCS-51000	LIT-51011	
I-269	3/4"	MANF. PROV. CABLE	PVC COATED RGS	LIT-51011	LI-51011	
I-270	3/4"	2/C #16TSH	PVC COATED RGS	LCS-51000	LIT-51021	
I-271	3/4"	MANF. PROV. CABLE	PVC COATED RGS	LIT-51021	LI-51021	
I-272	3/4"	2/C #16TSH	PVC COATED RGS	LCS-51000	LIT-51031	
I-273	3/4"	MANF. PROV. CABLE	PVC COATED RGS	LIT-51031	LI-51031	
I-274	3/4"	2/C #16TSH	PVC COATED RGS	LCS-51000	LIT-51041	

CABLE AND CONDUIT SCHEDULE - WEST PARISH WTF						
CONDUIT NO.	SIZE	CABLE	CONDUIT TYPE	FROM	TO	REMARKS
I-275	3/4"	MANF. PROV. CABLE	PVC COATED RGS	LIT-51041	LI-51041	
I-276	3/4"	2/C #16TSH	PVC COATED RGS	RIO-CHEM-A	LIT-51111	LI-51111
I-277	1"	2/C 2#16TSH	PVC COATED RGS	RIO-CHEM-A	P-51120	SI-51120, SC-51120
I-278	1"	2/C 2#16TSH	PVC COATED RGS	RIO-CHEM-A	P-51130	SI-51130, SC-51130
I-279	1"	2/C 2#16TSH	PVC COATED RGS	RIO-CHEM-A	P-51140	SI-51140, SC-51140
I-280	1"	2/C 2#16TSH	PVC COATED RGS	RIO-CHEM-A	P-51150	SI-51150, SC-51150
I-281	1"	2/C 2#16TSH	PVC SCHEDULE 80	RIO-CHEM-B	LCS-52000	LI-52011, LI-52021
I-282	3/4"	2/C #16TSH	PVC SCHEDULE 80	LCS-52000	LIT-52011	
I-283	3/4"	MANF. PROV. CABLE	PVC SCHEDULE 80	LIT-52011	LI-52011	
I-284	3/4"	2/C #16TSH	PVC SCHEDULE 80	LCS-52000	LIT-52021	
I-285	3/4"	MANF. PROV. CABLE	PVC SCHEDULE 80	LIT-52021	LI-52021	

CABLE AND CONDUIT SCHEDULE - WEST PARISH WTF						
CONDUIT NO.	SIZE	CABLE	CONDUIT TYPE	FROM	TO	REMARKS
I-286	3/4"	2/C #16TSH	PVC SCHEDULE 80	RIO-CHEM-B	LIT-52111	LI-52111
I-287	1"	2/C 2#16TSH	PVC SCHEDULE 80	RIO-CHEM-B	P-52120	SI-52120, SC-52120
I-288	1"	2/C 2#16TSH	PVC SCHEDULE 80	RIO-CHEM-B	P-52130	SI-52130, SC-52130
I-289	1"	2/C 2#16TSH	PVC SCHEDULE 80	RIO-CHEM-B	P-52140	SI-52140, SC-52140
I-290	1"	2/C 2#16TSH	PVC SCHEDULE 80	RIO-CHEM-B	P-52150	SI-52150, SC-52150
I-291	3/4"	2/C #16TSH	PVC SCHEDULE 80	RIO-CHEM-B	LIT-52116	LI-52116
I-292	1"	2/C 2#16TSH	PVC SCHEDULE 80	RIO-CHEM-B	P-52160	SI-52160, SC-52160
I-293	1"	2/C 2#16TSH	PVC SCHEDULE 80	RIO-CHEM-B	P-52170	SI-52170, SC-52170
I-294	1"	2/C 2#16TSH	PVC SCHEDULE 80	RIO-CHEM-B	P-52180	SI-52180, SC-52180
I-295	1"	2/C 2#16TSH	PVC SCHEDULE 80	RIO-CHEM-B	P-52190	SI-52190, SC-52190
I-296	1"	2/C 2#16TSH	PVC SCHEDULE 80	RIO-CHEM-C	LCS-53000	LI-53011, LI-53021

CABLE AND CONDUIT SCHEDULE - WEST PARISH WTF						
CONDUIT NO.	SIZE	CABLE	CONDUIT TYPE	FROM	TO	REMARKS
I-297	3/4"	2/C #16TSH	PVC SCHEDULE 80	LCS-53000	LIT-53011	
I-298	3/4"	MANF. PROV. CABLE	PVC SCHEDULE 80	LIT-53011	LI-53011	
I-299	3/4"	2/C #16TSH	PVC SCHEDULE 80	LCS-53000	LIT-53021	
I-300	3/4"	MANF. PROV. CABLE	PVC SCHEDULE 80	LIT-53021	LI-53021	
I-301	3/4"	2/C #16TSH	PVC SCHEDULE 80	RIO-CHEM-C	LIT-53111	LI-53111
I-302	1"	2/C 2#16TSH	PVC SCHEDULE 80	RIO-CHEM-C	P-53120	SI-53120, SC-53120
I-303	1"	2/C 2#16TSH	PVC SCHEDULE 80	RIO-CHEM-C	P-53130	SI-53130, SC-53130
I-304	1"	2/C 2#16TSH	PVC SCHEDULE 80	RIO-CHEM-C	P-53140	SI-53140, SC-53140
I-305	1"	2/C 2#16TSH	PVC SCHEDULE 80	RIO-CHEM-C	P-53150	SI-53150, SC-53150
I-306	1 1/2"	2/C 5#16TSH	PVC SCHEDULE 80	RIO-CHEM-A	LCS-54000	LI-54011, LI-54021, LI-54031, LI-54041, LI-54051
I-307	3/4"	2/C #16TSH	PVC SCHEDULE 80	LCS-54000	LIT-54011	

CABLE AND CONDUIT SCHEDULE - WEST PARISH WTF						
CONDUIT NO.	SIZE	CABLE	CONDUIT TYPE	FROM	TO	REMARKS
I-308	3/4"	MANF. PROV. CABLE	PVC SCHEDULE 80	LIT-54011	LI-54011	
I-309	3/4"	2/C #16TSH	PVC SCHEDULE 80	LCS-54000	LIT-54021	
I-310	3/4"	MANF. PROV. CABLE	PVC SCHEDULE 80	LIT-54021	LI-54021	
I-311	3/4"	2/C #16TSH	PVC SCHEDULE 80	LCS-54000	LIT-54031	
I-312	3/4"	MANF. PROV. CABLE	PVC SCHEDULE 80	LIT-54031	LI-54031	
I-313	3/4"	2/C #16TSH	PVC SCHEDULE 80	LCS-54000	LIT-54041	
I-314	3/4"	MANF. PROV. CABLE	PVC SCHEDULE 80	LIT-54041	LI-54041	
I-315	3/4"	2/C #16TSH	PVC SCHEDULE 80	LCS-54000	LIT-54051	
I-316	3/4"	MANF. PROV. CABLE	PVC SCHEDULE 80	LIT-54051	LI-54051	
I-317	3/4"	2/C #16TSH	PVC SCHEDULE 80	RIO-CHEM-A	LIT-54111	LI-54111
I-318	1"	2/C 2#16TSH	PVC SCHEDULE 80	RIO-CHEM-A	P-54120	SI-54120, SC-54120

CABLE AND CONDUIT SCHEDULE - WEST PARISH WTF						
CONDUIT NO.	SIZE	CABLE	CONDUIT TYPE	FROM	TO	REMARKS
I-319	1"	2/C 2#16TSH	PVC SCHEDULE 80	RIO-CHEM-A	P-54130	SI-54130, SC-54130
I-320	1"	2/C 2#16TSH	PVC SCHEDULE 80	RIO-CHEM-A	P-54140	SI-54140, SC-54140
I-321	1"	2/C 2#16TSH	PVC SCHEDULE 80	RIO-CHEM-A	P-54150	SI-54150, SC-54150
I-322	3/4"	2/C #16TSH	PVC COATED RGS	RIO-CHEM-B	WIT-55111	WI-55111
I-323	3/4"	MANF. PROV. CABLE	PVC COATED RGS	WIT-55111	WE-55111	
I-324	3/4"	2/C #16TSH	PVC COATED RGS	RIO-CHEM-B	WIT-55116	WI-55116
I-325	3/4"	MANF. PROV. CABLE	PVC COATED RGS	WIT-55116	WE-55116	
I-326	1"	2/C 2#16TSH	PVC COATED RGS	RIO-CHEM-B	SKID-55120	SI-55120, SC-55120
I-327	1"	2/C 2#16TSH	PVC COATED RGS	RIO-CHEM-B	SKID-55130	SI-55130, SC-55130
I-328	1"	2/C 2#16TSH	PVC COATED RGS	RIO-CHEM-C	LCS-56000	LI-56011, LI-56021
I-329	3/4"	2/C #16TSH	PVC COATED RGS	LCS-56000	LIT-56011	

CABLE AND CONDUIT SCHEDULE - WEST PARISH WTF						
CONDUIT NO.	SIZE	CABLE	CONDUIT TYPE	FROM	TO	REMARKS
I-330	3/4"	MANF. PROV. CABLE	PVC COATED RGS	LIT-56011	LI-56011	
I-331	3/4"	2/C #16TSH	PVC COATED RGS	LCS-56000	LIT-56021	
I-332	3/4"	MANF. PROV. CABLE	PVC COATED RGS	LIT-56021	LI-56021	
I-333	3/4"	2/C #16TSH	PVC COATED RGS	RIO-CHEM-C	LIT-56111	LI-56111
I-334	1"	2/C 2#16TSH	PVC COATED RGS	RIO-CHEM-C	SKID-56120	SI-56120, SC-56120
I-335	1"	2/C 2#16TSH	PVC COATED RGS	RIO-CHEM-C	SKID-56130	SI-56130, SC-56130
I-336	3/4"	2/C #16TSH	RGS	DDC-04	VFD-EF-01	REFER TO H-DRAWINGS (DWG H-003) FOR BLOCK DIAGRAMS
I-337	3/4"	2/C #16TSH	RGS	DDC-04	VFD-EF-02	REFER TO H-DRAWINGS (DWG H-003) FOR BLOCK DIAGRAMS
I-338	3/4"	2/C #16TSH	RGS	DDC-04	VFD-EF-03	REFER TO H-DRAWINGS (DWG H-003) FOR BLOCK DIAGRAMS
I-339	3/4"	2/C #16TSH	RGS	DDC-04	VFD-EF-04	REFER TO H-DRAWINGS (DWG H-003) FOR BLOCK DIAGRAMS
I-340	3/4"	2/C #16TSH	RGS	DDC-04	VFD-EF-05	REFER TO H-DRAWINGS (DWG H-003) FOR BLOCK DIAGRAMS
I-341	3/4"	2/C #16TSH	RGS	DDC-01	VFD-EF-06	REFER TO H-DRAWINGS (DWG H-003) FOR BLOCK DIAGRAMS
I-342	3/4"	2/C #16TSH	RGS	DDC-01	VFD-EF-07	REFER TO H-DRAWINGS (DWG H-003) FOR BLOCK DIAGRAMS

CABLE AND CONDUIT SCHEDULE - WEST PARISH WTF						
CONDUIT NO.	SIZE	CABLE	CONDUIT TYPE	FROM	TO	REMARKS
I-343	3/4"	2/C #16TSH	RGS	DDC-01	VFD-EF-08	REFER TO H-DRAWINGS (DWG H-003) FOR BLOCK DIAGRAMS
I-344	3/4"	2/C #16TSH	RGS	DDC-02	VFD-EF-09	REFER TO H-DRAWINGS (DWG H-003) FOR BLOCK DIAGRAMS
I-344.1	1"	2/C #16TSH	PVC SCHEDULE 40	TREATMENT BUILDING	METER CHAMBER	
DWB & WWT C&C						
I-345	1"	SINGLE MODE FIBER	RGS	ELECTRICAL SYSTEM MONITORING	MCC-4	JI-70541, JI-70542
I-345.1	1"	2/C 2#16TSH	RGS	VFD-60140	LCS-60140	
I-346	3/4"	2/C #16TSH	RGS	RIO-RESIDUALS	LIT-60111	LI-60111
I-346.1	1"	2/C 2#16TSH	RGS	VFD-60160	LCS-60160	
I-347	3/4"	2/C #16TSH	RGS	RIO-RESIDUALS	LIT-60121	LI-60121
I-348	3/4"	2/C #16TSH	RGS	RIO-RESIDUALS	AIT-60203	AI-60203
I-349	3/4"	MANF. PROV. CABLE	RGS	AIT-60203	AE-60203	
I-350	3/4"	2/C #16TSH	RGS	RIO-RESIDUALS	AIT-60204	AI-60204
I-351	3/4"	MANF. PROV. CABLE	RGS	AIT-60204	AE-60204	

CABLE AND CONDUIT SCHEDULE - WEST PARISH WTF						
CONDUIT NO.	SIZE	CABLE	CONDUIT TYPE	FROM	TO	REMARKS
I-352	3/4"	2/C #16TSH	RGS	CENT-60210	FIT-60201	
I-353	3/4"	MANF. PROV. CABLE	RGS	FIT-60201	FE-60201	
I-354	3/4"	2/C #16TSH	RGS	CENT-60220	FIT-60202	
I-355	3/4"	MANF. PROV. CABLE	RGS	FIT-60202	FE-60202	
I-356	3/4"	2/C #16TSH	RGS	RIO-RESIDUALS	WIT-60421	WI-60421
I-357	3/4"	MANF. PROV. CABLE	RGS	WIT-60421	WE-60421	
I-358	3/4"	2/C #16TSH	RGS	RIO-RESIDUALS	WIT-60461	WI-60421
I-359	3/4"	MANF. PROV. CABLE	RGS	WIT-60461	WE-60461	
I-360	1"	2/C 2#16TSH	RGS	RIO-RESIDUALS	SKID-60430	SI-60430, SC-60430
I-361	1"	2/C 2#16TSH	RGS	RIO-RESIDUALS	SKID-60470	SI-60470, SC-60470
I-362	3/4"	2/C #16TSH	RGS	RIO-RESIDUALS	LIT-60501	LI-60501
I-363	1"	2/C 2#16TSH	RGS	RIO-RESIDUALS	VFD-60510	SI-60510, SC-60510
I-364	1"	2/C 2#16TSH	RGS	VFD-60510	LCS-60510	
I-365	1"	2/C 2#16TSH	RGS	RIO-RESIDUALS	VFD-60520	SI-60520, SC-60520

CABLE AND CONDUIT SCHEDULE - WEST PARISH WTF						
CONDUIT NO.	SIZE	CABLE	CONDUIT TYPE	FROM	TO	REMARKS
I-366	1"	2/C 2#16TSH	RGS	VFD-60520	LCS-60520	
I-367	3/4"	2/C #16TSH	RGS	RIO-DAF-A2	PIT-46003	PI-46003
I-368	3/4"	2/C #16TSH	RGS	RIO-DAF-A2	AIT-46004	AI-46004
I-369	3/4"	MANF. PROV. CABLE	RGS	AIT-46004	AE-46004	
I-369.1	2"	2/C 10#16TSH	RGS	DEWATERING BUILDING	WASTE WASHWATER TANK (WWT)	VIA DB-24 (I-370, I-372, I-374, I-375, I-376, I-378)
I-370	1"	2/C 2#16TSH	PVC COATED RGS	RIO-RESIDUALS	VFD-46010	SI-46010, SC-46010
I-371	1"	2/C 2#16TSH	PVC COATED RGS	VFD-46010	LCS-46010	
I-372	1"	2/C 2#16TSH	PVC COATED RGS	RIO-RESIDUALS	VFD-46020	SI-46020, SC-46020
I-373	1"	2/C 2#16TSH	PVC COATED RGS	VFD-46020	LCS-46020	
I-374	1"	2/C #16TSH	PVC COATED RGS	RIO-RESIDUALS	LIT-46011	LI-46011
I-375	1"	2/C #16TSH	PVC COATED RGS	RIO-RESIDUALS	LIT-46021	LI-46021
I-376	1"	2/C 2#16TSH	PVC COATED RGS	RIO-RESIDUALS	VFD-46030	SI-46030, SC-46030

CABLE AND CONDUIT SCHEDULE - WEST PARISH WTF						
CONDUIT NO.	SIZE	CABLE	CONDUIT TYPE	FROM	TO	REMARKS
I-377	1"	2/C 2#16TSH	PVC COATED RGS	VFD-46030	LCS-46030	
I-378	1"	2/C 2#16TSH	PVC COATED RGS	RIO-RESIDUALS	VFD-46040	SI-46040, SC-46040
I-379	1"	2/C 2#16TSH	PVC COATED RGS	VFD-46040	LCS-46040	
I-380	3/4"	2/C #16TSH	RGS	RIO-DAF-A2	FIT-46001	FI-46001
I-381	3/4"	MANF. PROV. CABLE	RGS	FIT-46001	FE-46001	
I-382	1"	2/C 2#16TSH	RGS	RIO-DAF-A2	FCV-46001	ZC-46001, ZI-46001
I-383	3/4"	2/C #16TSH	RGS	RIO-DAF-B2	FIT-46002	FI-46002
I-384	3/4"	MANF. PROV. CABLE	RGS	FIT-46002	FE-46002	
I-385	1"	2/C 2#16TSH	RGS	RIO-DAF-B2	FCV-46002	ZC-46002, ZI-46002
I-386	3/4"	2/C #16TSH	RGS	RIO-DAF-A2	FIT-60504	FI-60504
I-387	3/4"	MANF. PROV. CABLE	RGS	FIT-60504	FE-60504	
I-388	1"	2/C 2#16TSH	RGS	RIO-DAF-A2	FCV-60504	ZC-60504, ZI-60504
I-389	1"	2/C #16TSH	RGS	RIO-DAF-A2	AIT-60506	AI-60506

CABLE AND CONDUIT SCHEDULE - WEST PARISH WTF						
CONDUIT NO.	SIZE	CABLE	CONDUIT TYPE	FROM	TO	REMARKS
I-390	3/4"	MANF. PROV. CABLE	RGS	AIT-60506	AE-60506	
I-391	3/4"	2/C #16TSH	RGS	RIO-DAF-B2	FIT-60505	FI-60505
I-392	3/4"	MANF. PROV. CABLE	RGS	FIT-60505	FE-60505	
I-393	1"	2/C 2#16TSH	RGS	RIO-DAF-B2	FCV-60505	ZC-60505, ZI-60505
I-394	3/4"	2/C #16TSH	RGS	DDC-08	VFD-EF-13	REFER TO H-DRAWINGS (DWG H-003) FOR BLOCK DIAGRAMS
I-395	3/4"	2/C #16TSH	RGS	DDC-08	VFD-EF-14	REFER TO H-DRAWINGS (DWG H-003) FOR BLOCK DIAGRAMS
BACKWASH FACILITY C&C						
I-396	1"	2/C 2#16TSH	RGS	PLC-CLEARWELL-CP	FCV-81040	ZC-81040, ZI-81040
I-397	3/4"	2/C #16TSH	RGS	PLC-CLEARWELL-CP	FIT-81060	FI-81060
I-398	3/4"	MANF. PROV. CABLE	RGS	FIT-81060	FE-81060	
I-399	1"	2/C 2#16TSH	RGS	PLC-CLEARWELL-CP	FCV-81060	ZC-81060, ZI-81060
I-400	1"	2/C 2#16TSH	RGS	PLC-CLEARWELL-CP	P-70360	SI-70360, SC-70360
I-401	1"	2/C 2#16TSH	RGS	PLC-CLEARWELL-CP	P-70370	SI-70370, SC-70370
I-402	3/4"	2/C #16TSH	RGS	PLC-CLEARWELL-CP	WIT-70352	WI-TBD

CABLE AND CONDUIT SCHEDULE - WEST PARISH WTF						
CONDUIT NO.	SIZE	CABLE	CONDUIT TYPE	FROM	TO	REMARKS
I-403	3/4"	MANF. PROV. CABLE	RGS	WIT-70352	WE-70352	

END OF SECTION

ATTACHMENT AB – 26 08 11 GENERAL ELECTRICAL TESTING

DIVISION 26

ELECTRICAL

(FILED SUB BID REQUIRED)

SECTION 26 08 11
GENERAL ELECTRICAL TESTING[1]

PART 1 – GENERAL

1.01 FILED SUB-BID REQUIREMENTS

A. This Section is part of the filed sub-bid for Division 26 – Electrical. See Section 26 05 00.

1.02 THE REQUIREMENT

A. Electrical testing shall be provided in accordance with this Section, the Specifications and the Contract Drawings.

B. The **ELECTRICAL SUBCONTRACTOR** shall provide all labor, materials, tools, instruments, power and all services necessary to provide the tests specified for all electrical materials, equipment and systems provided under this Contract.

C. The **ELECTRICAL SUBCONTRACTOR** shall engage the services of an Independent Testing Company (ITC) to perform specific tests as detailed in this Section and the Specifications.

D. Upon completion of the electrical installation, the **ELECTRICAL SUBCONTRACTOR** shall perform tests to demonstrate that the entire electrical system is in proper working condition and is in accordance with the Contract Drawings and the Specifications.

1. Tests shall be as outlined in this Section and those of the individual Sections.

2. Field tests shall be in addition to the factory tests on individual items previously performed at the manufacturer's plant.

3. Perform insulation integrity tests and ground resistance tests before operating tests.

4. Determine proper rotation of motors before permanent connections are made.

E. Plant refers to facilities used for the processing and conveyance of water or wastewater and includes pump stations, water and wastewater processing or treatment facilities.

---

1 Addendum No. 5

F. Low-voltage as used in this Section and the Specifications shall mean all equipment, conductors, insulation systems and accessories intended for operation within the 600 Volt Class.

1.03 CODES AND STANDARDS

A. Equipment and materials covered under this Section shall be designed, manufactured, and/or listed to the following standards as applicable:

1.	NETA ATS	-	Standard for Acceptance Testing Specifications for Electrical Power Equipment and Systems.
2.	INFRASPECTION INSTITUTE	-	Standard for Infrared Inspection of Electrical Systems & Rotating Equipment

1.04 SUBMITTALS

A. **ELECTRICAL SUBCONTRACTOR** shall submit working drawings, shop drawings and material specifications for the approval of the Engineer.

Submittals shall include, but not be limited to, the following:

1. Organization of the Testing Companies inclusive of details of the specific personnel that will be utilized on specific tests.

2. Documentation detailing firm accreditation.

3. Qualifications of testing personnel.

4. Proposed testing methods and schedules.

5. Calibration Reports of test equipmen.t

6. All field test reports.

1.05 QUALITY ASSURANCE

A. ITCs conducting Electrical Testing shall

a. Have a minimum of 10 years conducting tests as detailed in NETA ATS.

b. Be a first tier sub-contractor.

c. Be a firm independent of any parties to the Contract or associated Contract such as a sub-contractor or other prime Contractor.

d. Be a firm independent of the Engineer or the Designer.

e. Be a NETA Accredited Company deploying NETA certified personnel.

B. ITCs conducting Thermographic Testing shall

a. Have a minimum of 10 years conducting tests as detailed by the Infraspection Institute.

b. Be a first tier sub-contractor.

c. Be a firm independent of any parties to the Contract or associated Contract such as a sub-contractor or other prime Contractor.

d. Be a firm independent of the Engineer or the Designer.

e. Deploys Infraspection Institute certified personnel.

C. Calibration of equipment

1. All test instruments and test equipment shall have been calibrated within the 12 month period immediately preceding the dates when they will be used on this Contract.

2. All test instruments and test equipment shall bear the calibration marks, stamps or seals of an approved testing body or agency with reference standards directly traceable to those held by the National Institute of Standards and Technology (NIST).

PART 2 – EXECUTION

2.01 SCHEDULES / SCHEDULING

A. Written notice of the intent to proceed with any scheduled and approved tests shall be given to the Engineer at least two (2) weeks in advance of the commencement of the testing.

B. When testing requires that certain pieces of equipment be taken out of service, all testing procedures and schedules must be submitted to the Engineer for review and approval 45 days prior to the two (2) week notice above.

C. When testing has been scheduled as above, the Plant Superintendent must be notified 48 hours prior to any work to allow time for load switching and/or alternation of equipment.

D. All testing that requires temporary shutdown of Plant equipment must be coordinated with Plant Superintendent so as not to affect proper Plant operations.

E. At the end of t each workday, all equipment shall be back in place and ready for immediate use should a plant emergency arise.

F. In addition, should an emergency condition occur during testing, at the request of either the Plant Superintendent or the Engineer or the Engineer's designated representative attending the testing, the equipment shall be placed back in service immediately and turned over to Plant.

G. In the event of accidental shutdown of Plant equipment, the **ELECTRICAL SUBCONTRACTOR** shall notify Plant Superintendent or the Engineer or the Engineer's designated representative immediately to allow for an orderly restart of affected equipment.

2.02 IMPLEMENTATION

A. Test Personnel/Test Equipment

1. The **ELECTRICAL SUBCONTRACTOR** and where applicable in conjunction with the ITC, shall furnish all instruments and qualified personnel for all tests.

B. Attendance at Tests

1. All tests shall be made in the presence of the Engineer or a duly authorized representative of the Engineer.

2. When the presence of the Engineer or the Engineer's representative is waived, sworn statements, in duplicate, of the tests made and the results thereof shall be furnished to the Engineer by the **ELECTRICAL SUBCONTRACTOR**.

C. Tests/Testing by Others

1. The **ELECTRICAL SUBCONTRACTOR** shall make available the electrical system and personnel when required by other Contractors to test their respective equipment.

2. The **ELECTRICAL SUBCONTRACTOR** shall coordinate their resources with the other Contractors.

2.03 FIELD TESTING / QUALITY CONTROL

A. Non ITC Testing

1. **The ELECTRICAL SUBCONTRACTOR** shall complete all testing not required to be completed by an ITC including:

a. All low-voltage equipment testing.

b. All raceway testing not requiring the use of medium-voltage test methods.

c. All low-voltage cable testing utilizing low-voltage methods.

d. All phasing verifications utilizing low-voltage methods.

e. All continuity testing utilizing low-voltage methods.

f. All ground system bonding and continuity testing utilizing low-voltage methods.

g. All low-voltage voltage and potential testing and verifications.

B. ITC Testing

1. An independent testing company comprised of NETA certified test personnel and project administrators shall be retained by the **ELECTRICAL SUBCONTRACTOR** to complete the following:

a. All dielectric tests

b. All low-voltage protective device testing and setting related to Arc Flash Studies

c. All low-voltage Protective Device calibration, testing

d. All potential and current transformer Testing and determination of performance curves.

e. All Primary and Secondary injection tests of protective device systems.

f. All ground systems testing.

C. Thermographic Testing and Imaging

1. An independent testing company comprised of Infraspection Institute certified test personnel and project administrators shall be retained by the **ELECTRICAL SUBCONTRACTOR** to complete the following:

a. All thermographic testing of electrical equipment.

b. As required by specific Sections.

D. Final Field Testing

1. The **ELECTRICAL SUBCONTRACTOR** shall complete the installation and testing of the electrical installation at least two (2) months prior to the startup and testing of all other Work of the Contract.

2. During the period between the completion of electrical installation and the startup and testing of all other Work, the **ELECTRICAL SUBCONTRACTOR** shall make all completed and serviceable components of the electrical installation available to the other Contractors for their use in performing Preliminary and Final Field Tests.

3. Before each test commences, the **ELECTRICAL SUBCONTRACTOR** shall submit a detailed test procedure and also provide manpower and scheduling for the approval of the Engineer.

4. The **ELECTRICAL SUBCONTRACTOR** shall furnish detailed test procedures for any of his equipment required as part of the field tests of systems by other contractors.

2.04 TESTS

A. Upon completion of the installation, the **ELECTRICAL SUBCONTRACTOR** shall perform tests for operation, load (Phase) balance, overloads, and short circuits. Tests shall be made with and to the satisfaction of the Owner and Engineer.

B. The **ELECTRICAL SUBCONTRACTOR** shall perform all field tests and shall provide all labor, equipment, and incidentals required for testing and shall pay for electric power required for the tests. All defective material and workmanship disclosed shall be corrected by the **ELECTRICAL SUBCONTRACTOR** at no cost to the Owner. The **ELECTRICAL SUBCONTRACTOR** shall show by demonstration in service that all circuits and devices are in good operating condition. Test shall be such that each item of control equipment will function not less than five (5) times.

C. Refer to each individual specification section for detailed test requirements.

D. The **ELECTRICAL SUBCONTRACTOR** shall complete the installation and field testing of the electrical installation at least two (2) weeks prior to the start-up and testing of any equipment served by that electrical equipment. During the period between the completion of electrical installation and the start-up and testing of all other equipment, the **ELECTRICAL SUBCONTRACTOR** shall make all components of the Work available as it is completed for their use in performing Preliminary and Final Field Tests.

E. Before each test commences, the **ELECTRICAL SUBCONTRACTOR** shall submit a detailed test procedure, and also provide test engineer resume, personnel and scheduling information for the approval by the Engineer. In addition, the **ELECTRICAL SUBCONTRACTOR** shall furnish detailed test procedures for any electrical equipment required as part of the field tests of other systems.

2.05 INFRARED INSPECTION

A. Just prior to the final acceptance of a piece of equipment, the **ELECTRICAL SUBCONTRACTOR** shall perform an infrared inspection to locate and correct all heating problems associated with electrical equipment terminations. The infrared

inspection shall be performed by a third party, independent testing agency, not the **ELECTRICAL SUBCONTRACTOR**.

B. The infrared inspection shall apply to all new equipment and existing equipment in non-hazardous areas that is in any way modified under this Contract. All heating problems detected with new equipment furnished and installed under the Scope of this Contract shall be corrected by the **ELECTRICAL SUBCONTRACTOR** at no additional cost to the Owner. All problems detected with portions of existing equipment modified under this Contract shall also be corrected by the **ELECTRICAL SUBCONTRACTOR** at no additional cost to the Owner.

C. Any issues detected with portions of existing equipment that were not modified under this Contract are not the responsibility of the **ELECTRICAL SUBCONTRACTOR**. Despite the **ELECTRICAL SUBCONTRACTOR** not being held responsible for these problems, the **ELECTRICAL SUBCONTRACTOR** shall report them to the Owner and Engineer immediately for resolution.

D. The infrared inspection report shall include both digital and IR pictures positioned side by side. Both the digital and IR pictures shall be clear and high quality. Fuzzy, grainy, or poorly illuminated pictures are not acceptable. The IR picture shall be provided with a temperature scale beside it, and an indication of the hot spot temperature in each picture. Reports shall be furnished in a 3-ring binder, with all pages printed in full color, with equipment assemblies separated by tabs.

2.06 PROTECTIVE DEVICE SETTING AND TESTING

A. The **ELECTRICAL SUBCONTRACTOR** shall provide the services of a qualified, independent, third-party testing company using N.E.T.A. certified technicians to adjust, set, calibrate and test all protective devices in the electrical system. The company shall not be a subsidiary of the electrical equipment manufacturer. The qualifications of the testing company and resumes of the technicians as well as all data forms to be used for the field testing shall be submitted.

B. All protective devices in the electrical equipment shall be set, adjusted, calibrated and tested in accordance with the manufacturers' recommendations, the coordination study, and best industry practice.

C. Proper operation of all equipment associated with the device under test and its compartment shall be verified, as well as complete resistance, continuity and polarity tests of power, protective and metering circuits. Any minor adjustments, repairs and/or lubrication necessary to achieve proper operation shall be considered part of this Contract.

D. All solid state trip devices shall be checked and tested for setting and operation using manufacturers recommended test devices and procedures.

E. Circuit breakers and/or contactors associated with the above devices shall be tested for trip and close functions with their protective device.

F. When completed, the **ELECTRICAL SUBCONTRACTOR** shall provide a comprehensive report for all equipment tested indicating condition, readings, faults and/or deficiencies in same. Inoperative or defective equipment shall be brought immediately to the attention of the Engineer.

G. Prior to placing any equipment in service, correct operation of all protective devices associated with this equipment shall be demonstrated by field testing under simulated load conditions.

END OF SECTION

ATTACHMENT AC - 26 09 16 ELECTRIC CONTROLS AND RELAYS

DIVISION 26

ELECTRICAL

(FILED SUB BID REQUIRED)

SECTION 26 09 16
ELECTRIC CONTROLS AND RELAYS[1]

PART 1 – GENERAL

1.01 FILED SUB-BID REQUIREMENTS

A. This Section is part of the filed sub-bid for Division 26 – Electrical. See Section 26 05 00.

1.02 THE REQUIREMENT

A. The **ELECTRICAL SUBCONTRACTOR** shall furnish, install, test, and place in satisfactory operation all electric controls and relays as specified herein and indicated on the Drawings.

B. Electrical control and relay systems shall be assembled using NEMA rated components. Components designed and built to International Electrotechnical Commission (IEC) standards are not recognized. Equipment designed, manufactured, and Labeled in compliance with IEC standards is not acceptable.

C. Reference the following Specification Sections:

1. Section 26 05 00 – Basic Electrical Requirements

2. Section 26 05 53 – Identification for Electrical Systems

1.03 CODES AND STANDARDS

A. Products specified herein shall be designed, manufactured, and/or Listed to the following standards as applicable:

1. National Electrical Manufacturers Association (NEMA):

   a. NEMA 250 – Enclosures for Electrical Equipment.

2. National Fire Protection Association (NFPA):

---

1 Addendum No. 5

a. NFPA 70 – National Electrical Code (NEC).

3. Underwriters Laboratories (UL):

a. UL 508A – Standard for Industrial Control Panels.

1.04 SUBMITTALS

A. In accordance with the procedures and requirements set forth in the General Conditions and Section 01 33 00 – Submittal Procedures, the **ELECTRICAL SUBCONTRACTOR** shall obtain from the equipment manufacturer and submit the following:

1. Shop Drawings

2. Spare Parts List

B. Each submittal shall be identified by the applicable Specification Section.

1.05 SHOP DRAWINGS

A. Each submittal shall be complete in all respects, incorporating all information and data listed herein and all additional information required for evaluation of the proposed equipment's compliance with the Contract Documents.

B. Partial, incomplete, or illegible submittals will be returned to the **ELECTRICAL SUBCONTRACTOR** without review for resubmittal.

C. Shop drawings shall include but not be limited to:

1. Product data sheets.

D. The shop drawing information shall be complete and organized in such a way that the Engineer can determine if the requirements of these Specifications are being met. Copies of technical bulletins, technical data sheets from "soft-cover" catalogs, and similar information which is "highlighted" or somehow identifies the specific equipment items the **ELECTRICAL SUBCONTRACTOR** intends to provide are acceptable and shall be submitted.

1.06 SPARE PARTS

A. All spare parts as recommended by the equipment manufacturer shall be furnished to the Owner by the **ELECTRICAL SUBCONTRACTOR**. In addition to the manufacturer recommended spare parts, the following spare parts shall be provided for the local control stations:

1. One (1) contact block of each type furnished on the project

2. One (1) indicating light lens of each color furnished on the project

3. One (1) LED lamp of each color furnished on the project

B. Reference Section 26 05 00 – Basic Electrical Requirements for spare parts delivery and handling requirements.

PART 2 – PRODUCTS

2.01 CONTROL COMPONENTS

A. Manufacturers

1. Control components shall be manufactured by Eaton, The Square D Company, GE by ABB, Allen-Bradley, Siemens Energy and Automation, or Engineer approved equal.

B. Pilot Devices

1. General

a. All pilot devices shall be provided with a legend plate. Legend plates shall have a white background and black lettering and indicate the function of the respective pilot device. The text shown on the Drawings or indicated in the specifications shall be used as the basis for legend plate engraving (e.g., HAND-OFF-AUTO, RUN, EMERGENCY STOP, etc.).

b. All pilot devices shall be selected and properly installed to maintain the NEMA 250 rating of the enclosure in which they are installed. All pilot devices shall be UL 508 Listed.

c. All pilot devices shall be 30.5mm in diameter, unless otherwise indicated. 22mm devices are not acceptable.

d. Pilot devices for all electrical equipment under this Contract shall be of the same type and manufacturer unless otherwise specified herein or indicated on the Drawings.

e. In Class 1 Division 2 hazardous locations, pilot devices shall be the hermetically-sealed type, constructed in accordance with ANSI/ISA 12.12.01.

2. Pushbuttons

a. Pushbuttons shall be non-illuminated, black in color, and have momentary style operation unless otherwise indicated on the Drawings.

b. Pushbuttons shall have the quantity of normally closed and/or normally open contacts as indicated on the Drawings and as required. In addition to the required contacts, one (1) spare normally open and one (1) spare normally closed contact shall be installed at each pushbutton. Contacts shall be rated for 5A at 250VAC/DC (minimum), but no less than required for the application.

c. Pushbuttons shall be provided with a full guard around the perimeter of the button. Where a lockout style pushbutton is specified or indicated on the Drawings, provide a padlockable guard.

3. Selector Switches

a. Selector switches shall be non-illuminated, black in color, and have the number of maintained positions as indicated on the Drawings and as required. Handles shall be the extended type that provide a greater surface area for operation.

b. Selector switches shall have the quantity of normally closed and/or normally open contacts as indicated on the Drawings and as required. In addition to the required contacts, one (1) spare normally open and one (1) spare normally closed contact shall be installed at each selector switch. Contacts shall be rated for 5A at 250VAC/DC (minimum), but no less than required for the application.

c. Where indicated in the Drawings or Specifications, provide spring return positions.

d. Selector switches shall be provided with an indexing component that fits into the keyed portion of the cutout for the device and prevents the switch from spinning when operated.

4. Indicating Lights

a. Indicating lights shall be LED type, with the proper voltage rating to suit the application, and push-to-test feature.

b. Indicating light lens colors shall be as required in equipment specifications and/or as indicated on the Drawings. If lens colors are not indicated, the following colors shall be used:

Color	**Designation**
Red	"Run", "On", “Open”
Green	"Off", “Closed”

Amber	"Alarm", "Fail"
White	“Control Power On”

5. Emergency Stop and Tagline Switches

    a. Emergency stop switches shall be non-illuminated, red in color, with a minimum 35mm diameter mushroom head. Once activated, switch shall maintain its position and require a manual pull to release/reset.

    b. Tagline switches shall have a plunger that activates upon tension from the associated safety cable. Once activated, switch shall maintain its position and require a manual release/reset.

    c. Emergency stop and tagline switches shall have the quantity of normally closed and/or normally open contacts as indicated on the Drawings and as required. In addition to the required contacts, one (1) spare normally open and one (1) spare normally closed contact shall be installed at each switch. Contacts shall be rated for 5A at 250VAC/DC (minimum), but no less than required for the application.

C. Relays and Timers

1. General

    a. Relays and timers shall be furnished with an integral pilot light for positive indication of coil energization.

    b. Relays and timers shall have tubular pin style terminals with matching 11-pin DIN rail mount socket. Spade or blade style terminals are not acceptable.

    c. Relays and timers for all electrical equipment under this Contract shall be of the same type and manufacturer unless otherwise specified herein or indicated on the Drawings.

2. Control and Pilot Relays

    a. Relays shall have a clear or translucent housing that allows the contacts to be visually inspected without disassembly.

    b. Relays shall have coil voltage as required to suit the application and/or as indicated on the Drawings.

    c. Relays shall be provided with contacts rated for 10A (resistive), minimum, at 120/240 VAC and 28 VDC. Relays shall have 3-pole, double-throw (3PDT) contact arrangement.

3. Time Delay Relays

   a. Timers delay relays shall utilize electronic timing technology. Mechanical timing devices are not acceptable.

   b. Relays shall have coil voltage as required to suit the application and/or as indicated on the Drawings.

   c. Relays shall be provided with contacts rated for 10A (resistive), minimum, at 120/240 VAC and 28 VDC. Relays shall have double-pole double-throw (DPDT) contact arrangement.

   d. Time delay ranges shall be as indicated on the Drawings and/or as required to suit the application. Timing range shall be adjustable from the front of the relay. On delay and off delay timer configurations shall be provided as indicated on the Drawings and/or as required to suit the application.

4. Elapsed Time Meters

   a. Elapsed time meters shall be non-resettable type with no less than a four (4) digit display. Coil voltage shall be as required to suit the application and/or as indicated on the Drawings.

D. Control Terminal Blocks

1. Control terminal blocks shall be assembled on non-current carrying galvanized steel DIN mounting rails securely bolted to the enclosure or subpanel. Terminals shall be tubular screw type with pressure plate that will accommodate wire size range of #22 – #8 AWG.

2. Control terminal blocks shall be single tier with a minimum rating of 600 volts and 20A. Separate terminal strips shall be provided for each type of control used (e.g., 120VAC vs. 24VDC). Quantity of terminals shall be provided as required to suit the application. In addition, there shall be a sufficient quantity of terminals for the termination of all spare conductors.

3. Terminals shall be marked with a permanent, continuous marking strip, with each terminal numbered. One side of each terminal shall be reserved exclusively for incoming field conductors. Common connections and jumpers required for internal wiring shall not be made on the field side of the terminal.

2.02 LOCAL CONTROL STATIONS

A. Local control stations shall be furnished and installed complete with pushbuttons, selector switches, indicating lights, and other devices as indicated on the Drawings.

B. Specific devices installed in local control stations shall be provided in accordance with the requirements specified elsewhere in this Section.

C. In non-hazardous locations, local control stations shall be furnished with the following enclosure type and material of construction, dependent upon the designation of the area in which they are to be installed. Area designations are indicated on the Drawings.

Area Designation	**Enclosure Type and Material**
Indoor Wet Process Area	NEMA 4X, Type 304 Stainless Steel
Indoor Dry Process Area	NEMA 12, Die Cast Zinc
Indoor Dry Non-process Area	NEMA 12, Die Cast Zinc
Indoor Type 1 Chemical Storage/Transfer Area	NEMA 4X, Fiberglass or Thermoplastic Polyester
Indoor Type 2 Chemical Storage/Transfer Area	NEMA 4X, Type 304 Stainless Steel
All Outdoor Areas	NEMA 4X, Type 304 Stainless Steel

D. Local control stations for use in non-hazardous locations shall be UL-508 Listed. Local control stations for use in Class I, Division 1 and Class II, Divisions 1/2 hazardous locations shall be UL-1203 Listed. Local control stations for use in Class I, Division 2 hazardous locations shall be in accordance with ANSI/ISA 12.12.01-2013.

E. Provide a nameplate on each local control station in accordance with Section 26 05 53 – Identification for Electrical Systems. The name and/or number of the equipment associated with each control station shall be engraved on the nameplate, followed by the words “LOCAL CONTROL STATION”.

PART 3 – EXECUTION

3.01 INSTALLATION

A. Local control stations shall be provided in the enclosure type and material of construction required for the area in which it is installed. Reference the requirements in Part 2 herein, and the area designations indicated on the Drawings.

B. Local control stations shall be mounted, nominally, at 4ft 6in above finished floor or finished grade to the centerline of the enclosure, at the equipment height where appropriate and permitted by the NEC, or as shown otherwise on the Drawings.

C. All control components shall be mounted in a manner that will permit servicing, adjustment, testing, and removal without disconnecting, moving, or removing any other component. Components mounted on the inside of panels shall be mounted on

removable plates and not directly to the enclosure. Mounting shall be rigid and stable unless shock mounting is required otherwise by the manufacturer to protect equipment from vibration. Component's mounting shall be oriented in accordance with the component manufacturer's and industries' standard practices.

D. Pilot devices shall be properly bonded to the equipment enclosure door where they are installed. If proper bonding cannot be achieved through the locknuts that affix the device in place, a green colored bonding screw shall be provided on the pilot device. The device shall be bonded to the equipment enclosure with an insulated green bonding conductor.

E. Local control station covers shall be bonded to the local control station enclosure with an insulated green bonding conductor.

F. Wiring to devices at each local control station shall be provided with enough slack to permit the local control station cover to be removed and pulled at least 6 inches away from the enclosure.

G. Terminal strips, relays, timers, and similar devices shall not be installed on the rear of the panel/cabinet doors. Terminal strips, relays, timers, and similar devices shall not be installed on the side walls of panel/cabinet interiors without written permission from the Engineer.

END OF SECTION

ATTACHMENT AD – 26 12 19 PAD-MOUNTED, LIQUID-FILLED, MEDIUM-VOLTAGE TRANSFORMERS

DIVISION 26

ELECTRICAL

(FILED SUB BID REQUIRED)

SECTION 26 12 19

PAD-MOUNTED, LIQUID-FILLED, MEDIUM-VOLTAGE TRANSFORMERS[1][2]

PART 1 – GENERAL

1.01 FILED SUB-BID REQUIREMENTS

A. This Section is part of the filed sub-bid for Division 26 – Electrical. See Section 26 05 00.

1.02 THE REQUIREMENT

A. The **ELECTRICAL SUBCONTRACTOR** shall furnish, install, and test liquid-filled, pad-mount transformers for power distribution systems as specified herein, as indicated on the Drawings, and as required to complete the electrical installations.

B. All equipment specified in this Section shall be furnished by the transformer manufacturer who shall be responsible for the suitability and compatibility of all included equipment.

C. Reference Section 26 05 00 – Basic Electrical Requirements.

1.03 CODES AND STANDARDS

A. The liquid filled pad-mount transformer shall comply with the following codes and standards:

1. American National Standards Institute (ANSI):

   a. ANSI C57.12.00 – Latest Revision, General Requirements for Liquid Immersed Distribution, Power, and Regulating Transformers.

   b. ANSI C57.12.28 – Latest Revision, Switchgear and Transformers, Padmounted Equipment - Enclosure Integrity.

   c. ANSI C57.12.26 – Latest Revision, Standard for Transformers, Padmounted, Compartmental Type, Self-cooled Three Phase Distribution Transformer for

---

1 Addendum No.4
2 Addendum No. 5

Use with Separable Insulated High Voltage Connectors, High Voltage 34,500 Grd./y 19,920 Volts and Below: 3000 kVA and Smaller.

d. ANSI C57.12.90 – Latest Revision, Test Code for Liquid-Immersed Distribution Power, and Regulating Transformers and Guide for Short Circuit Testing of Distribution and Power Transformers.

e. ANSI/IEEE 386-1985, Separable Insulated Connectors for Power Distribution Systems Above 600 Volts.

2. Institute of Electrical and Electronic Engineers (IEEE).

3. Massachusetts Electrical Code (MEC).

4. National Electrical Manufacturers Association (NEMA):

a. NEMA 210.

1.04 SUBMITTALS

A. In accordance with the procedures and requirements set forth in the General Conditions and Section 01 33 00 – Submittal Procedures, the **ELECTRICAL SUBCONTRACTOR** shall obtain from the equipment manufacturer and submit the following:

1. Shop Drawings,

2. Operation and Maintenance Manuals,

3. Spare Parts List,

4. Special Tools List,

5. Reports of Certified Shop Tests, and

6. Reports of Field Tests including Oil Analysis.

B. Each submittal shall be identified by the applicable Specification Section.

1.05 SHOP DRAWINGS

A. Each submittal shall be complete in all respects, incorporating all information and data listed herein and all additional information required for evaluation of the proposed equipment's compliance with the Contract Documents.

B. Partial, incomplete or illegible submittals will be returned to the **ELECTRICAL SUBCONTRACTOR** without review for resubmittal.

C. Shop drawings shall include but not be limited to:

071515

1. Product data sheets.

2. Sample equipment nameplate diagram.

3. Drawings showing clearly marked overall dimensions for each transformer. Drawings shall show conduit stub-up area locations.

4. Weight of each transformer.

5. Proof of ISO 9001 registration.

6. A Compliance, Deviations, and Exceptions (CD&E) letter. If the shop drawings are submitted without this CD&E letter, the submittal will be rejected. The letter shall include all comments, deviations and exceptions taken to the Drawings and Specifications by the **ELECTRICAL SUBCONTRACTOR** AND Equipment Manufacturer/Supplier. This letter shall include a copy of this Specification Section. In the left margin beside each and every paragraph/item, a letter "C", "D", or "E" shall be typed or written in. The letter "C" shall be for full compliance with the requirement. The letter "D" shall be for a deviation from the requirement. The letter "E" shall be for taking exception to a requirement. Any requirements with the letter "D" or "E" beside them shall be provided with a full typewritten explanation of the deviation/exception. Handwritten explanation of the deviations/exceptions is not acceptable. The CD&E letter shall also address deviations, and exceptions taken to each Drawing related to this Specification Section.

D. The submittal information shall reflect the specific equipment identification number as indicated on Drawing E-012.

E. The shop drawing information shall be complete and organized in such a way that the Engineer can determine if the requirements of these Specifications are being met. Copies of technical bulletins, technical data sheets from "soft-cover" catalogs, and similar information which is "highlighted" or somehow identifies the specific equipment items that the **ELECTRICAL SUBCONTRACTOR** intends to provide are acceptable and shall be submitted.

1.06 OPERATION AND MAINTENANCE MANUALS

A. The **ELECTRICAL SUBCONTRACTOR** shall submit operation and maintenance manuals in accordance with the procedures and requirements set forth in the General Conditions and Division 01.

1.07 TOOLS, SUPPLIES AND SPARE PARTS

A. The transformers shall be furnished with all special tools necessary to disassemble, service, repair and adjust the equipment. All spare parts as recommended by the equipment manufacturer shall be furnished to the Owner by the **ELECTRICAL SUBCONTRACTOR**. The **ELECTRICAL SUBCONTRACTOR** shall furnish the following

minimum spare parts for each transformer.

No. Required	Description
1 set	Primary fuses of each size provided

B. The spare parts shall be packed in containers suitable for long term storage, bearing labels clearly designating the contents and the pieces of equipment for which they are intended.

C. Spare parts shall be delivered at the same time as the equipment to which they pertain. The **ELECTRICAL SUBCONTRACTOR** shall properly store and safeguard such spare parts until completion of the work, at which time they shall be delivered to the Owner.

D. Spare parts lists, included with the Shop Drawing submittal, shall indicate specific sizes, quantities, and part numbers of the items to be furnished. Terms such as "1 lot of packing material" are not acceptable.

E. Parts shall be completely identified with a numerical system to facilitate parts inventory control and stocking. Each part shall be properly identified by a separate number. Those parts which are identical for more than one size, shall have the same parts number.

1.08 IDENTIFICATION

A. The transformer shall be identified with the identification number indicated on the Drawings. A nameplate shall be securely affixed in a conspicuous place on each transformer. Nameplates shall be as specified in Section 26 05 53 – Identification for Electrical Systems.

PART 2 – PRODUCTS

2.01 MANUFACTURERS

A. The equipment covered by this Specification is intended to be standard equipment of proven performance as manufactured by reputable concerns. Equipment shall be designed, constructed and installed in accordance with the best practices of the trade, and shall operate satisfactorily when installed as shown on the Drawings.

B. All transformer manufacturers shall be registered as an ISO 9001 quality manufacturer.

C. Liquid filled pad-mount transformers shall be by the Square D Company, Eaton, the General Electric Company, ABB, or equal.

2.02 PAD-MOUNT TRANSFORMERS

A. Pad-mount transformers shall be of a compact design. The transformer kVA rating shall be as indicated on the Drawings. All units shall be a pad mounted compartmental type, which when assembled shall be an integral unit for mounting on a pad. All units shall be designed to comply with the short circuit capability requirements of ANSI C57.12.00.

B. The transformer shall carry its continuous rating with average winding temperature rise by resistance that shall not exceed 55 degrees C rise, based on an average ambient of 30 degrees C over 24 hours with a maximum of 40 degrees C. The insulation system shall allow an additional 12% kVA output at 65 degrees C average winding temperature rise by resistance, on a continuous basis, without any decrease in normal transformer life, as defined by ANSI C57.12.00.

C. Primary bushings shall be rated 200 amperes.

D. Coolant and insulating fluid shall be inhibited mineral oil. The transformer shall be furnished and installed in accordance with the latest edition of Article 450 of the MEC and in accordance with the requirements of the testing and listing agency of the liquid. All transformer liquid shall be bulk tested for polychlorinated biphenyls (PCBs) per ASTM D 4059 and certified, upon request, as having no detectable level of PCB.

E. The high voltage windings shall be rated 23 kV and 125 kV BIL unless indicated otherwise on the Drawings for use on a solidly grounded system and shall have two (2) 2-1/2% full capacity taps above and below rated voltage. Impedance shall be 5.75% subject to NEMA/ANSI ± 7.5% impedance tolerance.

F. The low voltage windings shall be rated 480Y/277 VAC and 30 kV BIL unless indicated otherwise on the Drawings. Transformers shall be designed for either step up or step-down use.

G. Low voltage neutrals shall be connected internally to the secondary neutral lugs and brought out to an insulated low voltage neutral spade type bushing with an externally removable ground strap. The low voltage neutral shall be a fully insulating bushing. A ground pad shall be provided on the outer surface of the tank with one or more removable ground straps suitably sized for the short circuit rating of the transformer provided and connected between the neutral bushing and the ground pad.

H. High and low voltage windings shall be copper.

I. The transformer and associated terminal compartments shall be so designed and constructed as to be tamper resistant. There shall be no screws, bolts, or other fastening devices which are externally removable. Transformers shall be suitable for outdoor installation without a fence or other area enclosure. Full height, air filled incoming and outgoing terminal compartments with hinged doors shall be located side by side separated by a steel barrier, with the incoming (primary) compartment on the left. The lift-off doors shall be equipped with stainless steel hinges to allow the doors to be

removed and door stops to hold the doors open if not removed while working in the compartments. The incoming compartment shall be accessible only after the door to the outgoing (secondary) compartment has been opened. To facilitate making connections and permit cable pulling, the doors shall be removable. Removable door sill on compartments shall be provided to permit rolling or skidding of unit into place over conduit "stub-ups" in foundation.

J. Locking provisions shall be provided in accordance with Paragraph 7 of ANSI C57.12.26-Latest Revision utilizing a captive penta-head bolt. Enclosure security shall conform with Paragraph 4 of ANSI C57.12.20-Latest Revision.

K. The high voltage incoming line compartment shall be dead-front, shall enclose the high voltage bushings, and provide for cabling from below. Externally clamped dead-front primary bushings shall be universal bushing wells with dead front inserts or dead front, "feed thru" inserts as required. The compartment shall have a hinged door with a fastening device which is accessible only through the low voltage compartment and makes possible the use of a single padlock.

L. The **ELECTRICAL SUBCONTRACTOR** shall furnish dead front, load break elbow cable terminators.

M. 30kV distribution class lightning arresters for surge protection shall be provided. Three (3) arresters shall be provided. Arresters shall be mounted in the high voltage compartment. Lightning arrester MCOV (Maximum Continuous Operating Voltage) shall be 24.4kV rms.

N. The low voltage incoming line compartment shall be live-front, shall be arranged for cabling from below, and shall contain 3-spade type externally clamped bushings for phase connections and 1-spade type bushing for neutral and/or ground connection. Low voltage bushings shall be supported with an insulating material in a manner designed to counteract any downward forces resulting from the connection of multiple cables to the bushings. Spades shall be the appropriate length to support the number of cables to be terminated as shown on the Drawings with standard NEMA hole spacing. The low voltage door shall have a 3-point latch (top, bottom, middle) to discourage unauthorized entry.

O. The transformer shall be designed to be capable of withstanding short circuits without damage on any winding, at a magnitude of fault current equal to the full rated voltage divided by the per unit impedance with full voltage maintained on all windings connected to the external source of power.

P. The internal high-voltage leads of the transformer shall be adequately insulated and mechanically secured. Connection to the coil conductors shall be made by a process ensuring avoidance of damage to the coil insulation.

Q. All high-voltage phase leads shall be installed rigidly and spaced to provide dielectric and mechanical strength and ensure absolute phase isolation.

R. All high and low voltage windings shall be secured in place by use of B-stage epoxy pattern paper. The epoxy shall be thermally cured under pressure to ensure the bonding of conductor and paper.

S. Core laminations shall be annealed, free of burrs, and furnished with a heat-resistant insulating coating. All core sections shall be grounded to the core clamp.

T. Bolted connections will be acceptable only from lead to bushing connection. All other connections shall be welded or adequately crimped.

U. The transformer shall be of sealed-tank construction or sufficient strength to withstand a pressure of 7 psi without permanent distortion. The domed cover to aid water run-off shall be welded and the fastenings tamperproof. The transformer shall remain effectively sealed for a top liquid temperature range of -30°C to 105°C. When required, cooling panels shall be provided on the back and sides of the tank.

V. Lifting provisions shall be permanently attached and arranged on the tank to provide a distributed, balanced lift in a vertical direction for the completely assembled transformer.

W. Terminal designations shall be as defined by ANSI C57.12.70. The high and low voltage terminal designations shall be indicated on the tank wall with oil resistant yellow paint or decals. A permanently marked diagrammatic instruction nameplate shall be located inside the low voltage compartment and be in accordance with all provisions contained in ANSI C57.12.26, Paragraph 7.4.

X. The inside base of the transformer sill shall have a flange for anchoring the cabinet to the equipment pad.

Y. Tank grounding provisions shall be as stated in ANSI standards. The grounding provisions shall be capped before painting the unit. The unit shall be shipped with the caps in place.

Z. The transformer shall be equipped with an externally operated, padlockable tap changer. The tap changer shall be designed for de-energized operation. The operating handle shall give permanent visual indication of the voltage position and have a provision for securing it at the desired position. The tap changer shall be marked for de-energized operation and the handle shall be easily accessible and located inside the high-voltage compartment. By operating the handle, all three phases shall be operated simultaneously. Tap position shall be clearly marked and a locking mechanism provided to prevent accidental operation.

AA. Furnish each transformer with the following accessories:

1. A liquid level indicator.

2. A dial type liquid temperature gauge.

3. An oil drain valve located outside of the primary and secondary termination cabinets. Valve shall be behind a hinged, lockable cover. Valve shall be accessible from outside the transformer without the need to open the primary or secondary termination cabinets.

4. Infrared (IR) maintenance inspection windows for primary and secondary termination cabinets.

5. A 1-inch NPT upper plug (or cap) for filling and pressure testing.

6. A pressure vacuum gauge.

7. A pressure relief valve.

8. An automatic pressure relief device (self-resealing w/indicator).

9. A key-interlock to high voltage door.

10. Alarm contacts for accessory gauges.

11. Mounting provisions for low-voltage current transformers and potential transformers.

12. Hot stick for operating internal switches and pulling fuses.

BB. All transformers shall be coated with a primer and finish coat to provide a tough, non-chalking weather resistant finish. The finish coat shall be dark green Munsell-7.5G.Y.3.29.1.5 (Olive Green). The paint thickness shall be a minimum of 2.5 mils.

CC. The transformers shall be provided with the following labels, designed for outside application, permanently affixed to the front of each unit.

1. kVA Rating label
(Shall be centered 4-6 inches above the Secondary Voltage decal).

2. Secondary Voltage label
(Shall be centered 4-6 inches above the Danger Hazardous Voltage decal)

3. Danger Hazardous Voltage decal
(Shall be centered on the inside of the high voltage compartment door)

4. “Non-PCB's" label in conformance with EPA 40 CFR Part 761

PART 3 – EXECUTION

3.01 INSTALLATION

A. The transformers shall be furnished and installed as shown on the Drawings and as recommended by the equipment manufacturer.

B. Prior to final completion of the work, all metal surfaces of the transformer shall be cleaned thoroughly, and all scratches and abrasions shall be retouched with the same lacquer as used for shop finishing coats.

C. Adjust primary taps such that the secondary voltage is within two (2) percent of rated voltage.

3.02 TESTING

A. All tests shall be performed in accordance with the requirements of the General Conditions and Division 01. The following tests are required:

1. Witnessed Shop Tests

    a. None required.

2. Certified Shop Tests and Reports

    a. Submit description of proposed testing methods, procedures, and apparatus.

    b. Submit notarized and certified copies of all test reports.

    c. The transformers shall be given routine factory tests in accordance with the requirements of the ANSI and NEMA standards. Temperature rises may be certified from basic design. The tests shall be:

    d. Resistance measurements of all windings on the rated voltage connection of each unit and at the tap extremes of one unit only of a given rating.

        1) Ratio tests on the rated voltage connection and on all tap connections.

        2) Polarity and phase-relation tests on the rated voltage connections.

        3) No-load loss at rated voltage on the rated voltage connection.

        4) Exciting current at rated voltage on the rated voltage connection.

        5) Impedance and load loss at rated current on the rated voltage connection of each unit and on the tap extremes of one unit only of a given rating.

6) Applied potential test.

7) Induced potential tests.

3. Field Tests

a. Field tests shall be performed in accordance with the requirements specified in the General Conditions, Division 01, and NETA Acceptance Testing Specifications, latest edition. All visual and mechanical inspections shall be performed. All electrical tests shall be performed, including optional tests.

b. Upon energization of each transformer, the **ELECTRICAL SUBCONTRACTOR** shall take a sample of the transformer insulating liquid in accordance with ASTM D-923 to be analyzed and establish a baseline for future analysis. Analysis shall be performed by an independent testing laboratory that regularly engages in transformer insulating liquid testing. A report of the findings shall be submitted to the Engineer and Owner. The sample shall be tested for the following (minimum):

1) Dielectric breakdown voltage per ASTM D-877 and/or ASTM D-1816.

2) Acid neutralization number per ASTM D-974

3) Specific gravity per ASTM D-1298

4) Interfacial tension per ASTM D-971 or ASTM D-2285

5) Color per ASTM D-1500

6) Visual condition per ASTM D-1524

7) For all silicone filled units and all units with a voltage class of 25kV or greater, test for water in insulating liquid per ASTM D-1533

8) Measure dissipation factor or liquid power factor per ASTM D-924

9) Perform dissolved gas analysis per ANSI/IEEE C57.104 or ASTM D-3612.

END OF SECTION

ATTACHMENT AE- 26 13 16 MEDIUM VOLTAGE FUSE INTERRUPTER SWITCHGEAR

DIVISION 26

ELECTRICAL

(FILED SUB BID REQUIRED)

SECTION 26 13 16
MEDIUM-VOLTAGE FUSE INTERRUPTER SWITCHGEAR[1][2]

PART 1 – GENERAL

1.01 DEFINITIONS

A. FSB Filed Sub-Bid(der)

B. FSSB Filed Sub-Sub Bid(der)

1.02 FILED SUB-BID REQUIREMENTS

A. This Section is part of the filed sub-bid for Division 26 – Electrical. See Section 26 05 00.

1.03 THE REQUIREMENT

A. The **ELECTRICAL SUBCONTRACTOR** shall furnish, install, test, and place in satisfactory operation, dead-front type, medium voltage, load interrupter switchgear as specified herein and indicated on the Drawings.

B. The switchgear shall contain a fusible switch and all accessories as specified herein, indicated on the Drawings, and as required to result in a complete and operable power distribution equipment assembly.

C. The **ELECTRICAL SUBCONTRACTOR** shall obtain the switchgear from one manufacturer who shall also manufacture the structure and major equipment components, which includes, but is not limited to, assemblies of switches and controls. Sub-contracting of wiring is not acceptable.

D. The switchgear shall be assembled using ANSI, and where applicable, NEMA rated components. Components designed and built to International Electrotechnical Commission (IEC) standards are not recognized. Equipment designed, manufactured and labeled in compliance with IEC standards is not acceptable.

E. Control and relaying/metering circuits shall be wired in accordance with the requirements specified herein or indicated on the Drawings.

9-22-2023

1 Addendum No.4

2 Addendum No. 5

F. Reference Section 26 05 00 – Basic Electrical Requirements; Section 26 05 53 – Identification for Electrical Systems; and Section 26 09 16 – Electric Controls and Relays.

1.04 CODES AND STANDARDS

A. The switchgear assemblies and switches shall comply with the following codes and standards:

1. American National Standards Institute (ANSI):

   a. C37.20.3: Metal-Enclosed Interrupter Switchgear.

   b. C37.22: Preferred Ratings and Related Required Capabilities for Ac Medium-Voltage Switches Used in Metal-Enclosed Switchgear.

   c. C37.57: Metal-Enclosed Interrupter Switchgear Assemblies-Conformance Testing.

   d. C37.58: Indoor AC Medium-Voltage Switches for Use in Metal-Enclosed Switchgear-Conformance Test Procedures.

2. Institute of Electrical and Electronic Engineers (IEEE).

3. Massachusetts Electrical Code (MEC).

4. National Electrical Manufacturers' Association (NEMA):

   a. SG5 – Power Switchgear Assemblies.

1.05 TESTING

A. All tests shall be performed in accordance with the requirements of the General Conditions and Division 01. The following tests are required:

1. Shop Tests

   a. The switchgear specified in this Section shall be shop tested and inspected in accordance with the equipment manufacturer's standard procedures. The testing and inspection procedures shall demonstrate that the equipment tested conforms to the requirements specified and shall be approved by the Engineer. All tests shall be in accordance with the latest version of ANSI and NEMA standards. At least 10 days’ notice shall be given the Engineer prior to such tests and inspection dates.

2. Certified Shop Tests and Reports

   a. Submit description of proposed testing methods, procedures, and apparatus.

   b. Submit certified copies of all test reports.

c. As a minimum, the entire switchgear assembly shall go through a quality inspection before shipment. This inspection shall include, but is not limited to, the following:

1) Physical inspection of the structure and the electrical conductors including bussing and general wiring.

2) General electrical tests including power circuit phasing, control circuit wiring, instrument transformers, meters, ground fault system, and device electrical operation (where applicable).

3) AC dielectric tests of the power circuits and control circuits.

4) Markings/labels, including instructional type, Underwriters Laboratory (U.L.), and inspector's stamps.

d. The manufacturer shall use integral quality control checks throughout the manufacturing process to maintain the correctness of the switchgear.

3. Field Tests

a. Field tests shall be performed in accordance with requirements specified in the General Conditions, Division 01, and Section 26 05 00 – Basic Electrical Requirements.

1.06 SUBMITTALS

A. In accordance with the procedures and requirements set forth in the General Conditions and Section 01 33 00 – Submittal Procedures, the **ELECTRICAL SUBCONTRACTOR** shall obtain from the equipment manufacturer and submit the following:

1. Shop Drawings,

2. Operation and Maintenance Manuals,

3. Spare Parts List,

4. Special Tools List, and

5. Proposed Testing Methods and Reports of Certified Shop Tests.

B. Each submittal shall be identified by the applicable Specification Section.

1.07 SHOP DRAWINGS

A. Each submittal shall be complete in all respects, incorporating all information and data listed herein and all additional information required for evaluation of the proposed equipment's compliance with the Contract Documents.

B. Partial, incomplete or illegible submissions will be returned to the **ELECTRICAL SUBCONTRACTOR** without review for resubmittal.

C. Shop drawings for each switchgear assembly shall include but not be limited to:

1. Equipment specifications and product data sheets identifying all electrical ratings.

2. Complete assembly, layout, installation, and foundation drawings with clearly marked dimensions.

3. Weights of all component parts, assembled weight of units, and approximate total shipping weight.

4. Example equipment nameplate data sheet.

5. Plan, front and side view drawings, including overall dimensions of each switchgear assembly. Identify shipping splits and show conduit exit/entry area locations on the drawings.

6. Complete one-line diagram of each switchgear line-up. These drawings shall indicate devices comprising the switchgear assembly including, but not limited to, switches, control power and instrument transformers, meters, protective relays, and control devices (where applicable). Clearly indicate the electrical ratings of all devices.

7. Bill of material list for each switchgear assembly including each switchgear section.

8. Nameplate schedule for each section.

9. Manufacturer's installation instructions.

10. Manufacturer's standard warranty.

11. The shop drawing information shall be complete and organized in such a way that the Engineer can determine if the requirements of these specifications are being met. Copies of technical bulletins, technical data sheets from "soft-cover" catalogs, and similar information which is "highlighted" or somehow identifies the specific equipment items the **ELECTRICAL SUBCONTRACTOR** intends to provide are acceptable and shall be submitted.

1.08 OPERATIONS AND MAINTENANCE MANUALS

A. The **ELECTRICAL SUBCONTRACTOR** shall submit operation and maintenance manuals in accordance with the procedures and requirements set forth in the General Conditions and Division 01. The manuals shall include:

1. Instruction books, descriptive bulletins, technical bulletins, application data bulletins, and other applicable instructional information.

2. Recommended spare parts list.

3. Final as-built construction drawings included in the shop drawings incorporating all changes made in the manufacturing process.

1.09 TOOLS, SUPPLIES, AND SPARE PARTS

A. The switchgear shall be furnished with all special tools necessary to disassemble, service, repair, and adjust the equipment and all spare parts as recommended by the equipment manufacturer. The **ELECTRICAL SUBCONTRACTOR** shall furnish the following minimum spare parts for each switchgear assembly:

Number Required	Description
1 set	Power fuses of each size provided.
1	Operating handle.

B. The spare parts shall be packed in containers suitable for long term storage, bearing labels clearly designating the contents and the pieces of equipment for which they are intended.

C. Spare parts shall be delivered at the same time as the equipment to which they pertain. The **ELECTRICAL SUBCONTRACTOR** shall properly store and safeguard such spare parts until completion of the Work, at which time they shall be delivered to the Owner.

D. Spare parts lists, included with the shop drawing submittal shall indicate specific sizes, quantities, and part numbers of the items to be furnished. Terms such as "1 lot of packing material" are not acceptable.

E. Parts shall be completely identified with a numerical system to facilitate parts inventory control and stocking. Each part shall be properly identified by a separate number. Those parts which are identical for more than one size, shall have the same parts number.

1.10 SERVICES OF MANUFACTURER'S REPRESENTATIVE

A. The **ELECTRICAL SUBCONTRACTOR** shall provide the services of a qualified manufacturer's technical representative who shall adequately supervise the installation and testing of all equipment furnished under this Contract and instruct the **ELECTRICAL SUBCONTRACTOR'S** personnel and the Owner's operating personnel in its maintenance and operation as outlined in Division 01. The services of the manufacturer's representative shall be provided for a period of not less than as follows:

1. One trip of one (1) working day after acceptance of the equipment.

B. Any additional time required to achieve successful installation and operation shall be at the expense of the **ELECTRICAL SUBCONTRACTOR**. The manufacturer's representative shall sign in and out at the office of the Engineer's Field Representative on each day they are at the project.

1.11 IDENTIFICATION

A. Each switchgear assembly shall be identified with the identification number indicated on the Drawings (e.g., Switchgear SG51A, Switchgear SG51B). A nameplate shall be securely affixed in a conspicuous place on each switchgear assembly. Nameplates shall be as specified in Section 26 05 53 – Identification for Electrical Systems.

1.12 TRAINING

A. The **ELECTRICAL SUBCONTRACTOR** shall provide training for Owner personnel. Training shall be conducted by the manufacturer's factory trained specialists who shall instruct Owner personnel in operation and maintenance of all equipment provided under this Section. Training shall be in accordance with the requirements of Section 01 79 00 – Instruction of Owner’s Personnel.

PART 2 – PRODUCTS

2.01 MANUFACTURERS

A. The equipment covered by these specifications is intended to be standard equipment of proven performance as manufactured by reputable concerns. Equipment shall be designed, constructed, and installed in accordance with the best practices of the trade, and shall operate satisfactorily when installed as shown on the Drawings.

B. It is the intent of these specifications that the switchgear be produced by a single manufacturer who shall be responsible for matching all components and providing equipment which functions together as a system. Manufacturers that provide complete switchgear assemblies using load interrupter switches produced by another major manufacturer shall only be allowed if specifically accepted by the Engineer.

C. The medium voltage load interrupter switchgear shall be Type MVS as manufactured by Eaton Corporation, Type HVL as manufactured by Square D Company, Vista by S&C, or equal.

2.02 MEDIUM VOLTAGE LOAD INTERRUPTER SWITCHGEAR

A. General

1. Switchgear shall be suitable for use as service entrance equipment in accordance with Underwriters Laboratories requirements. Each complete assembly including each load interrupter switch section shall bear a U.L. label.

2. The switchgear described in this specification shall be designed for operation on a 23.0 kV, three-phase, 3 wire, solidly grounded, 60 hertz system.

B. Ratings

1. Load interrupter switchgear ratings shall be as follows:

Nominal System Voltage	23 kV
System Grounding	Solidly grounded
Maximum Design Voltage	27 kV
Basic Impulse Level	125 kV
Bus Continuous Current	600 Amperes
Momentary Current	[40] kA Asym.
Short-Time Current (Two Seconds)	[25] kA Sym.

2. The switchgear assembly shall be of outdoor construction.

C. Stationary Structure

1. The load interrupter switchgear shall consist of deadfront, completely metal enclosed vertical sections containing load interrupter switches and fuses (where shown) of the number, rating, and type noted on the Drawings or specified herein.

2. The following features shall be supplied on each vertical section containing a load interrupter switch:

   a. A high impact viewing window that permits full view of the position of all three switch blades through the closed door.

   b. The door shall be interlocked with the switch so that:

      1) The switch must be opened before the door can be opened.

      2) The door must be closed before the switch can be closed.

   c. A grounded metal barrier in front of every switch to prevent inadvertent contact with any live part yet allow for a full-view inspection on the switch blade position and access to the fuse holder compartment.

   d. Provision for padlocking the switch in the open or closed position.

   e. Permanent "Open-Closed" switch position indicators.

   f. Infrared (IR) viewing ports (one per phase).

3. Vertical section construction shall be of the universal frame type using die-formed and bolted parts. All enclosing covers and doors shall be fabricated from not less than 11-gauge steel. Top cover shall be removable. Rear doors shall be hinged with tamper resistant padlockable latches.

4. Each vertical section containing a switch shall have a single, full length, flanged front door and shall be equipped with two rotary latched type padlockable handles.

Provisions shall be made for operating the switch and storing the removable handle without opening the full length door.

5. A nameplate shall be mounted on the front door of the switch vertical section in accordance with Section 26 05 53 – Identification for Electrical Systems.

6. A vertical barrier shall be provided between the switch and cable area.

7. A lower screen barrier shall be provided between front door and fuses.

8. Each load interrupter switch shall be quick-make, quick-break, three-pole, gang operated, with stored energy operation.

9. A manual over toggle type mechanism shall be supplied which utilizes a heavy duty coil spring to provide opening and closing action of the switch. The speed of the opening and closing switch shall be independent of the operator and it shall be impossible to tease the switch into any intermediate position under normal operation.

10. Each interrupter switch shall have separate main and make/break contacts to provide maximum endurance for fault close and load interrupting duty.

11. The switch assembly shall have insulating barriers between phases and between outer phases and the enclosure.

12. Prior to assembly, all enclosing steel shall be thoroughly cleaned and phosphatized. A powder coating shall be applied electrostatically, then fused on by baking in an oven. The coating is to have a thickness of not less than 1.5 mils. The finish shall have the following properties:

Impact resistance (ASTM D-2794)	60 Direct/60 Indirect
Pencil Hardness (ASTM D-3363)	H
Flexibility (ASTM D-522)	Pass 1/8" mandrell
Salt Spray (ASTM B117-85)[20])	600 hours
Color	ANSI 61 Gray

D. Bus

1. Buses and main connections shall consist of flat copper bars.

2. The bus shall be braced to withstand fault currents equal to the fault close (momentary) rating of the switches.

3. Access to the main bus shall be from the rear of the structure.

4. Bus supports between units shall be indoor NEMA class insulators made of flame-retardant, track-resistant glass polyester. All bus joints shall be silver plated and insulated with easily installed boots. The bolted bus joints shall use constant pressure washers for positive contact.

5. A ground bus of adequate capacity shall be furnished and installed throughout the switchgear structure. The ground bus shall be of sufficient size to conduct the rated two-second current of the switchgear assembly. Each stationary unit at a bare metal surface shall be effectively connected to this ground bus.

6. The uninsulated ground bus shall be tin-plated copper bar. Ground each housing directly to this bus. Ground relay panels with a No. 6 AWG insulated copper wire to the ground bus.

7. All main and ground buses shall be extended through the entire length of the switchgear assembly. All busses shall have provisions for future extension.

E. Terminations

1. Each cable compartment shall be suitable for Class 3 terminations, suitable for the specified cable, of quantity and size as indicated on the Drawings.

F. Fuses

1. Fault protection shall be furnished by fuses as specified herein, and indicated on the Drawings. The fuses shall have a minimum interrupting rating of 35kA symmetrical at 27 kV and shall be current limiting type.

2. Furnish three spares for each fused switch and provide a storage rack on the inside of the main door for these spare fuses.

3. Each fusible switch section shall be furnished with a blown fuse low voltage contact for remote blown fuse indication.

G. Surge Protection

1. 30kV distribution class metal oxide varistor (MOV) surge arresters shall be provided connected at the incoming terminations and securely grounded to the metal structure. The maximum continuous operating voltage (MCOV) for the surge arresters shall be 24.4kV.

H. Control Wiring and Control Terminal Blocks

1. Wire and factory test switchgear to satisfy the requirements of the operation described or necessary.

2. Switchgear secondary wiring shall be NEC Type SIS, single-conductor, stranded copper, rated 600 volts, 90□C bundled and secured with nylon ties. Provide flexible stranding for swinging doors and panels. Minimum wire size shall be No.

14 AWG for voltage transformer wiring, interlock wiring, and control circuit wiring. For current transformer circuits, minimum wire size shall be No. 12 AWG. Number 10 AWG or larger wire shall be used to decrease resistance as required.

3. Route outgoing control wires for outgoing or "cell-to-cell" interconnecting wiring to the master terminal blocks with suitable numbering strips numbered in agreement with the manufacturer's detailed wiring diagrams. Provide a minimum of 10 percent (10%) spare terminal blocks for each circuit breaker and auxiliary compartment.

4. Terminal blocks for control wiring shall be provided in accordance with Section 26 09 16 – Electric Controls and Relays.

5. Number wiring with shrink-type tag devices at both ends consistent with the manufacturer's detailed wiring diagrams. Duplication of wire numbers and terminal block numbers is not acceptable.

I. Nameplates

1. Provide engraved plastic nameplates to identify switchgear sections, door mounted devices, and internal components.

2. Nameplates shall be as specified in Section 26 05 53 – Identification for Electrical Systems engraved with the circuit number and circuit name as indicated on the Drawings.

3. Label the switchgear per the requirements of NEC and ANSI C37.20.3.

4. Provide a master nameplate giving switchgear designation, voltage-ampere rating, short circuit rating, manufacturer's name, general order number and item number.

5. Control components mounted within the assembly, such as fuse blocks, relays, pushbuttons, switches, and other devices, shall be suitably marked for identification corresponding to appropriate designations on manufacturer's wiring diagrams.

J. Switchgear Equipment

1. Furnish and equip the load interrupter switch sections and auxiliary sections as previously specified and as follows:

a. Load interrupter switch with fuses.

b. Bottom entries for power cable entry as required and as indicated on the Drawings.

c. Ground bus extending the full length of the switchgear.

d. Auxiliary contacts, auxiliary relays, and interposing contactors as required to provide remote interlocking and indicating functions specified herein and

indicated on the Drawings. Provide 2 spare normally open and 2 spare normally closed contacts per auxiliary relay, contactor, and similar equipment.

2. Switchgear shall be furnished complete with fused, thermostatically controlled space heaters. One space heater shall be installed in each vertical structure. Utilize tubular type operated at half voltage for long life; 250 volt rated heaters at 120 volt. Provide power supplies to the space heaters as specified herein and indicated on the Drawings. The **ELECTRICAL SUBCONTRACTOR** shall wire heaters to provide temporary heating during storage.

K. Warning Signs

1. Provide a minimum of 1 warning signs on the front of the switchgear and 1 on the back.

a. Red laminated plastic engraved with white letters approximately 1/2 inch high.

b. Signs shall read "DANGER HIGH VOLTAGE"

L. Source Quality Control

1. Completely assemble, wire, and test the switchgear at the factory. Detailed inspections before and after assembly shall assure correctness of design and workmanship. Provide groups of wires leaving the shipping-assembled equipment with terminal blocks with suitable numbering strips.

2. After assembly, provide the switchgear with lifting channels having eyebolts for attachment of crane slings to facilitate lifting and handling each shipping-assembly unit. These lifting channels shall be removable after equipment is placed on permanent foundations.

M. Finish

1. The switchgear finish shall consist of gray (ANSI-61), thermosetting, polyester powder paint applied electrostatically to pre-cleaned and phosphatized steel and aluminum for internal and external parts. The coating shall have corrosion resistance of 600 hours to 5% salt spray. Prior to shipment, the complete assemblies, indoor as well as outdoor, shall be given 1.5 to 2.0 mil thick exterior finish spray coat of air drying high-gloss gray enamel.

PART 3 – EXECUTION

3.01 INSTALLATION

A. The switchgear shall be furnished and installed as shown on the Drawings and in accordance with the manufacturer's recommendations and installation instructions. One

(1) copy of these instructions shall be included with the equipment at time of shipment. The equipment shall be suitably protected with space heaters connected until accepted by the Owner.

B. Furnish and install structural mounting channels in accordance with manufacturer's recommendations to provide proper alignment of the units.

C. The equipment shall be installed and checked in accordance with the manufacturer's recommendations. This shall include, but not be limited to:

1. Checking to ensure that the pad location is level to within .125 inches every three (3) feet in any direction.

2. Checking to ensure that all bus bars are torqued to the manufacturer's recommendations.

3. Assemble all shipping sections, remove all shipping braces and connect all shipping split mechanical and electrical connections.

4. Secure assemblies to foundation or floor channels.

5. Measure and record High-Pot readings phase-to-phase, phase-to-ground, and neutral-to-ground (four-wire systems only).

3.02 PAINTING

A. Prior to final completion of the work, all metal surfaces of the equipment shall be cleaned thoroughly, and all scratches and abrasions shall be retouched with the same coating as used for factory finishing coats.

3.03 MANUFACTURER'S CERTIFICATION

A. A qualified, factory-trained manufacturer's representative shall certify in writing that the equipment has been installed, adjusted, and tested in accordance with the manufacturer's recommendations.

END OF SECTION

ATTCHMENT AF – 26 22 00 LOW-VOLTAGE TRANSFORMERS

DIVISION 26

ELECTRICAL

(FILED SUB BID REQUIRED)

SECTION 26 22 00
LOW-VOLTAGE TRANSFORMERS[1]

PART 1 – GENERAL

1.01 FILED SUB-BID REQUIREMENTS

A. This Section is part of the filed sub-bid for Division 26 – Electrical. See Section 26 05 00.

1.02 THE REQUIREMENT

A. The **ELECTRICAL SUBCONTRACTOR** shall furnish, install, and test transformers for power and lighting distribution systems as specified herein, as indicated on the Drawings, and as required to complete the electrical installations.

B. All equipment specified in this Section shall be furnished by the transformer manufacturer who shall be responsible for the suitability and compatibility of all included equipment.

C. Reference Section 26 05 00 – Basic Electrical Requirements and Section 26 05 53 – Identification for Electrical Systems.

1.03 CODES AND STANDARDS

A. Transformers shall conform to all applicable Federal, UL, and NEMA standards. Materials and components shall be new and conform to grades, qualities and standards as specified herein and shown on the Drawings.

B. Transformers shall comply with the following standards:

1. UL 1561 – Dry Type General Purpose and Power Transformers

2. U.S. Department of Energy 2016 Efficiency

3. Massachusetts Electrical Code

4. NEMA ST-20 – Dry Type Transformers for General Applications

---

1 Addendum No. 5

5. ANSI/IEEE C57 – Standard General Requirements for Dry Type Distribution and Power Transformers

1.04 SUBMITTALS

A. In accordance with the procedures and requirements set forth in the General Conditions and Division 01, the **ELECTRICAL SUBCONTRACTOR** shall obtain from the equipment manufacturer and submit the following:

1. Shop Drawings.

2. Operation and Maintenance Manuals.

3. Spare Parts List.

4. Reports of Certified Shop Field Tests.

B. Each submittal shall be identified by the applicable Specification Section.

1.05 SHOP DRAWINGS

A. Each submittal shall be complete in all respects, incorporating all information and data listed herein, and all additional information required for evaluation of the proposed equipment's compliance with the Contract Documents.

B. Partial, incomplete, or illegible submittals will be returned to the **ELECTRICAL SUBCONTRACTOR** without review for resubmittal.

C. Shop drawings shall include but not be limited to:

1. Product data sheets.

2. Drawings showing clearly marked dimensions and weight for each transformer.

3. Sample equipment nameplate diagram.

D. The submittal information shall reflect the specific equipment identification number as indicated on the Drawings (e.g. TX-LP-BB).

E. The shop drawing information shall be complete and organized in such a way that the Engineer can determine if the requirements of these Specifications are being met. Copies of technical bulletins, technical data sheets from "soft-cover" catalogs, and similar information which is "highlighted" or somehow identifies the specific equipment items that the **ELECTRICAL SUBCONTRACTOR** intends to provide are acceptable and shall be submitted.

0322

1.06 OPERATION AND MAINTENANCE MANUALS

A. The **ELECTRICAL SUBCONTRACTOR** shall submit operation and maintenance manuals in accordance with the procedures and requirements set forth in the General Conditions and Division 01.

1.07 SPARE PARTS

A. All spare parts as recommended by the equipment manufacturer shall be furnished to the Owner by the **ELECTRICAL SUBCONTRACTOR**.

B. Spare parts lists, included with the Shop Drawing submittal, shall indicate specific sizes, quantities, and part numbers of the items to be furnished. Terms such as "1 lot of packing material" are not acceptable.

C. Parts shall be completely identified with a numerical system to facilitate parts inventory control and stocking. Each part shall be properly identified by a separate number. Those parts which are identical for more than one size, shall have the same parts number.

1.08 IDENTIFICATION

A. Each transformer shall be identified with the equipment item number indicated on the Contract Drawings and the accepted Shop Drawings. A nameplate shall be securely affixed in a conspicuous place on each transformer. Nameplates shall be as specified in Section 26 05 53 – Identification for Electrical Systems.

PART 2 – PRODUCTS

2.01 MANUFACTURERS

A. The equipment covered by this Specification is intended to be standard equipment of proven performance as manufactured by reputable concerns. Equipment shall be designed, constructed and installed in accordance with the best practices of the trade, and shall operate satisfactorily when installed as shown on the Drawings.

B. Dry type distribution transformers shall be manufactured by the Square D Company, the GE by ABB, Eaton, or Siemens Energy and Automation, Inc.

2.02 DRY TYPE TRANSFORMERS

A. Furnish and install single-phase and three-phase general purpose, dry-type transformers, as specified herein and indicated on the Drawings. The transformers shall be 60 Hz, self-cooled, quiet design type.

B. The transformers shall be UL 1561 Listed.

C. Transformers shall meet the requirements of the most current version of federal law 10 CFR Part 431 "Energy Efficiency Program for Certain Commercial and Industrial Equipment”.

D. Transformer efficiency shall be measured as prescribed by 10 CFR Part 431

E. The primary windings shall be rated 480 VAC for use on 3phase systems and connected delta unless indicated otherwise on the Drawings. KVA ratings shall be as shown on the Drawings.

F. Furnish transformers with two 21/2% primary taps above, and four 21/2% primary taps below rated voltage for transformers 15 KVA and above, and two 21/2% primary taps above, and two 21/2% primary taps below rated voltage for transformers less than 15 kVA. All taps shall be full capacity rated.

G. The ratings of the secondary windings shall be as indicated on the Drawings.

H. Transformers shall be designed for continuous operation at rated KVA, 24 hours a day, 365 days a year, with normal life expectancy as defined in ANSI/IEEE C57.96. This performance shall be obtainable without exceeding 150 degrees Celsius average temperature rise by resistance or 180 degrees Celsius hot spot temperature rise in a 40 degrees Celsius maximum ambient and 30 degrees Celsius average ambient. The maximum coil hot spot temperature shall not exceed 220 degrees Celsius. All insulating materials shall be flame retardant and shall not support combustion as defined in ASTM Standard Test Method D 635. All insulating materials shall be in accordance with NEMA ST 20 Standard for a 220 degrees Celsius UL component recognized insulation system.

I. Transformer coils shall be of the continuous wound copper construction and shall be impregnated with non-hygroscopic, thermosetting varnish.

J. All cores are to be constructed of high grade, non-aging, grain oriented silicon steel with high magnetic permeability and low hysteresis and eddy current losses. Magnetic flux densities are to be kept well below the saturation point. The core laminations shall be tightly clamped and compressed with structural steel angles. The completed core and coil shall then be bolted to the base by means of vibration absorbing mounts to minimize sound transmission. There shall be no metal-to-metal contact between the core and coil assembly and the enclosure.

K. All transformers shall be equipped with a wiring compartment suitable for conduit entry and large enough to allow convenient wiring. The maximum temperature of the enclosure shall not exceed 90 degrees Celsius. Transformers shall be furnished with lugs of the size and quantity required and suitable for termination of the field wiring.

L. The core of the transformer shall be visibly grounded to the enclosure by means of a flexible grounding conductor sized in accordance with applicable NEMA, IEEE, and ANSI standards.

M. Transformers shall have core and coil assemblies mounted on rubber isolation pads to minimize the sound levels. Transformers shall not exceed the sound levels listed in NEMA ST-20.

N. Transformers shall be furnished with the following enclosure type and material of construction, dependent upon the designation of the area in which they are to be installed. Area designations are indicated on the Drawings.

Area Designation	Enclosure Type and Material
Indoor Wet Process Area	NEMA 3R, Painted Steel
Indoor Dry Process Area	NEMA 2, Painted Steel
Indoor Dry Non-Process Area	NEMA 2, Painted Steel
All Outdoor Areas	NEMA 3R, Painted Steel

O. The enclosure shall be made of heavy gauge steel and shall be degreased, cleaned, primed, and finished with a baked weather-resistant enamel using the manufacturer's standard painting process. Color shall be ANSI 61.

EXECUTION

2.03 INSTALLATION

A. The transformers shall be furnished and installed as shown on the Drawings and as recommended by the equipment manufacturer.

B. Conduit routed to and from the transformer shall be arranged for easy removal of the transformer access covers.

C. Where transformers 50 kVA and smaller are shown to be wall mounted, a transformer manufacturer supplied wall mounting kit shall be used. The lowest point of the wall mounting bracket shall be no lower than 7'-0" above the finished floor. Field fabricated mounting hardware is not acceptable unless reviewed and approved in writing by the Engineer.

D. Prior to final completion of the work, all metal surfaces of the equipment shall be cleaned thoroughly, and all scratches and abrasions shall be retouched with the same lacquer as used for shop finishing coats.

2.04 TESTING

A. All tests shall be performed in accordance with the requirements of the General Conditions and Division 01. The following tests are required:

1. Certified Shop Tests

a. The transformers shall be given routine factory tests in accordance with the requirements of the ANSI and NEMA standards. Temperature rises may be certified from basic design.

b. As a minimum, the following tests shall be made on all transformers:

1) Ratio tests on the rated voltage connection and on all tap connections.

2) Polarity and phase-relation tests on the rated voltage connection.

3) Applied potential tests.

4) Induced potential tests.

5) No-load and excitation current at rated voltage on the rated voltage connection.

2. Field Tests

a. Field testing shall be done in accordance with the requirements specified in the General Conditions, Division 01, and NETA Acceptance Testing Specifications, latest edition.

b. Insulation between windings shall be tested by 1000 VDC Megaohmeter for one (1) minute. Resistance value shall be no less than 100 Megaohms.

END OF SECTION

ATTACHMENT AG – 26 23 00 LOW VOLTAGE SWITCHGEAR

DIVISION 26

ELECTRICAL

(FILED SUB BID REQUIRED)

SECTION 26 23 00
LOW VOLTAGE SWITCHGEAR[1]

PART 1 – GENERAL

1.01 FILED SUB-BID REQUIREMENTS

A. This Section is part of the filed sub-bid for Division 26 – Electrical. See Section 26 05 00.

1.02 THE REQUIREMENT

A. The **ELECTRICAL SUBCONTRACTOR** shall furnish, install, test, and place in satisfactory operation, dead-front type, low voltage, draw-out, metal enclosed power circuit breaker switchgear as specified herein and indicated on the Drawings.

B. The switchgear shall be the air break power circuit breaker type with draw-out circuit breaker elements.

C. The line-up shall contain circuit breakers, metering equipment, control devices, and all accessories as specified herein, indicated on the Drawings, and as required to result in a complete and operable power distribution equipment assembly.

D. The **ELECTRICAL SUBCONTRACTOR** shall obtain the switchgear from one manufacturer who shall also manufacture the structure and major equipment components, which includes, but is not limited to, assemblies of circuit breakers and auxiliary housings, draw-out type air circuit breakers, instrument transformers, meters, relays, and controls. Sub-contracting of wiring is not acceptable.

E. The switchgear shall be assembled using NEMA rated components. Components designed and built to International Electrotechnical Commission (IEC) standards are not recognized. Equipment designed, manufactured and labeled in compliance with IEC standards is not acceptable.

F. Circuit breaker control and relaying/metering circuits shall be wired in accordance with the requirements specified herein or indicated on the Drawings.

G. Related sections reference:

---

1 Addendum No. 5

1. Section 26 05 00 – Basic Electrical Requirements,

2. Section 26 05 53 – Identification for Electrical Systems,

3. Section 26 32 13 – Engine Generators,

4. Section 26 09 16 – Electric Controls and Relays,

5. Section 26 33 53 – Static Uninterruptible Power Supply, and

6. Section 26 43 13 – Surge Protective Devices.

1.03 CODES AND STANDARDS

A. The switchgear assemblies and power circuit breakers shall comply with the following codes and standards:

1. American National Standards Institute (ANSI):

   a. C37.13 – Low Voltage AC Power Circuit Breakers Used in Enclosures.

   b. C37.16 – Preferred Ratings, Related Requirements and Application Recommendations for Low Voltage Power Circuit Breakers and AC Power Circuit Protectors.

   c. C37.20.1 – Standard for Metal - Enclosed Low Voltage Power Circuit Breaker Switchgear.

   d. C37.51 – Standard Conformance Test Procedures for Metal-Enclosed Low Voltage AC Power Circuit Breaker Switchgear Assemblies.

2. Institute of Electrical and Electronic Engineers (IEEE).

3. National Electrical Manufacturers' Association (NEMA):

   a. SG3 – Low-Voltage Power Circuit Breakers.

   b. SG5 – Power Switchgear Assemblies.

4. Underwriters Laboratories, Inc. (UL):

   a. UL 1558 – Metal-Enclosed Low Voltage Power Circuit Breaker Switchgear.

   b. UL 1066 – Low-Voltage AC and DC Power Circuit Breakers Used in Enclosures.

032521

1.04 SUBMITTALS

A. In accordance with the procedures and requirements set forth in the General Conditions and Section 01 33 00 – Submittal Procedures, the **ELECTRICAL SUBCONTRACTOR** shall obtain from the equipment manufacturer and submit the following:

1. Shop Drawings.

2. Operation and Maintenance Manuals.

3. Spare Parts List.

4. Proposed Testing Methods and Reports of Certified Shop Tests.

5. Manufacturer’s Field Start-up Report.

6. Manufacturer’s Representative’s Installation Certification.

B. Each submittal shall be identified by the applicable Specification Section.

1.05 SHOP DRAWINGS

A. Each submittal shall be complete in all respects, incorporating all information and data listed herein and all additional information required for evaluation of the proposed equipment's compliance with the Contract Documents.

B. Partial, incomplete or illegible submissions will be returned to the **ELECTRICAL SUBCONTRACTOR** without review for resubmittal.

C. Shop drawings for each switchgear assembly shall include but not be limited to:

1. A Compliance, Deviations, and Exceptions (CD&E) letter. If the shop drawings are submitted without this CD&E letter, the submittal will be rejected. The letter shall include all comments, deviations and exceptions taken to the Drawings and Specifications by the **ELECTRICAL SUBCONTRACTOR** AND Equipment Manufacturer/Supplier. This letter shall include a copy of this Specification Section. In the left margin beside each and every paragraph/item, a letter "C", "D", or "E" shall be typed or written in. The letter "C" shall be for full compliance with the requirement. The letter "D" shall be for a deviation from the requirement. The letter "E" shall be for taking exception to a requirement. Any requirements with the letter "D" or "E" beside them shall be provided with a full typewritten explanation of the deviation/exception. Handwritten explanation of the deviations/exceptions is not acceptable. The CD&E letter shall also address deviations, and exceptions taken to each Drawing related to this Specification Section.

2. Equipment specifications and product data sheets identifying all electrical ratings.

3. Complete assembly, layout, installation, and foundation drawings with clearly marked dimensions.

4. Assembled weight of units and approximate total shipping weight.

5. Example equipment nameplate data sheet.

6. Plan, front and side view drawings, including overall dimensions of each switchgear assembly. Identify shipping splits and show conduit stub-up area locations on the drawings. Provide details for busway connections.

7. Internal wiring diagram of each low voltage switchgear compartment. Each wiring diagram shall include wire identification and terminal numbers.

8. Internal compartment-to-compartment interconnection wiring diagrams including wiring identification and terminal numbers.

9. Complete one-line diagram of each switchgear line-up and complete three-line diagram for each switchgear line-up. These drawings shall indicate devices comprising the switchgear assembly including, but not limited to, circuit breakers, control power and instrument transformers, meters, relays, and control devices. Clearly indicate electrical ratings of all devices.

10. Bill of material list for each switchgear assembly including each switchgear compartment.

11. Nameplate schedule for each compartment.

12. Manufacturer's installation instructions.

13. Manufacturer's written warranty statement.

14. Key interlock scheme drawing (where applicable).

15. Written sequence of operation for automatic transfer controls (and/or automatic throwover and automatic breaker controls).

16. Detailed drawings showing plan, front, and side views as well as appropriate section views of the sheltered aisle enclosure. Include product data sheets for all appurtenances (e.g. exhaust fan, lighting, etc.) to be furnished and installed.

17. The shop drawing information shall be complete and organized in such a way that the Engineer can determine if the requirements of these specifications are being met. Copies of technical bulletins, technical data sheets from "soft-cover" catalogs, and similar information which is "highlighted" or somehow identifies the specific equipment items the **ELECTRICAL SUBCONTRACTOR** intends to provide are acceptable and shall be submitted.

1.06 OPERATIONS AND MAINTENANCE MANUALS

A. The **ELECTRICAL SUBCONTRACTOR** shall submit operation and maintenance manuals in accordance with the procedures and requirements set forth in the General Conditions and Division 01. The manuals shall include:

1. Instruction books and/or leaflets.

2. Recommended spare parts list.

3. Final as-built construction drawings shall be included in the shop drawings incorporating all changes made in the manufacturing process.

1.07 SPARE PARTS

A. The switchgear shall be furnished with all spare parts as recommended by the equipment manufacturer. In addition to the spare parts recommended by the manufacturer, the **ELECTRICAL SUBCONTRACTOR** shall furnish the following minimum spare parts for each switchgear assembly:

Number Required	Description
1 set	Fuses of each size provided.
1	Control power transformer of each size used.
1	Lamps and lenses for indicating lights, each color.
1	Indicating lamp sockets for each type used.
2	Pilot devices (e.g. pushbutton, selector switch, etc.) complete with contact blocks and legend plates for each type, color, size and rating used.

B. The spare parts shall be packed in containers suitable for long-term storage, bearing labels clearly designating the contents and the pieces of equipment for which they are intended.

C. Spare parts shall be delivered at the same time as the equipment to which they pertain. The **ELECTRICAL SUBCONTRACTOR** shall properly store and safeguard such spare parts until completion of the Work, at which time they shall be delivered to the Owner.

D. Spare parts lists, included with the shop drawing submittal shall indicate specific sizes, quantities, and part numbers of the items to be furnished. Terms such as "1 lot of packing material" are not acceptable.

E. Parts shall be completely identified with a numerical system to facilitate parts inventory control and stocking. Each part shall be properly identified by a separate number. Those parts which are identical for more than one size, shall have the same parts number.

1.08 IDENTIFICATION

A. Each switchgear assembly shall be identified with the identification number indicated on the Drawings (e.g., Switchgear SG1A, Switchgear SG1B). A nameplate shall be securely affixed in a conspicuous place on each switchgear assembly. Nameplates shall be as specified in Section 26 05 53 – Identification for Electrical Systems.

1.09 WARRANTY TERMS

A. The manufacturer's and **ELECTRICAL SUBCONTRACTOR'S** warranty shall in no event be for a period of less than two (2) years from date of delivery of equipment to the project site and shall include repair labor, travel expense necessary for repairs at the jobsite, and expendables used during the course of repair. Submittals received without written warranties as specified shall be rejected in their entirety.

B. The **ELECTRICAL SUBCONTRACTOR** shall provide a complete warranty covering all equipment included in the scope of supply. This warranty shall include, but is not limited to, the following:

1. Complete switchgear lineup, including all components and accessories.

PART 2 – PRODUCTS

2.01 MANUFACTURERS

A. The equipment covered by these specifications is intended to be standard equipment of proven performance as manufactured by reputable concerns. Equipment shall be designed, constructed and installed in accordance with the best practices of the trade, and shall operate satisfactorily when installed as shown on the Drawings.

B. It is the intent of these specifications that the switchgear be produced by a single manufacturer who shall be responsible for matching all components and providing equipment which functions together as a system. Manufacturers that provide complete switchgear assemblies using power circuit breakers produced by another major manufacturer shall only be allowed if specifically accepted by the Engineer.

C. The switchgear shall be Magnum PXR as manufactured by Eaton, Power Zone 4 as manufactured by the Square D Company, Type WL by Siemens, or AKD-20 as manufactured by ABB.

2.02 LOW VOLTAGE METAL ENCLOSED SWITCHGEAR

A. General

1. Switchgear shall be suitable for use as service entrance equipment in accordance with Underwriters Laboratories requirements. Each complete assembly shall bear a U.L. label.

B. Ratings

1. Voltage rating shall be as indicated on the Drawings. The entire assembly shall be suitable for 600 volts maximum AC service.

2. Rate complete switchgear assembly to withstand mechanical forces exerted during short circuit conditions when connected directly to a power source having available fault current of 65,000 amperes symmetrical at rated voltage. Test switchgear for conformance according to ANSI C37.51.

3. The bus system shall have a minimum ANSI 30-cycle short circuit withstand rating of 100,000 amperes symmetrical without upstream current limiting fuses.

4. All ratings shall be tested to the requirements of ANSI C37.20.1, C37.50 and C37.51 and U.L. witnessed and approved.

5. The switchgear assembly enclosure rating shall be NEMA 3R suitable for outdoor use where indicated as ‘outdoor switchgear’ or NEMA 1 suitable for indoor use where indicated as ‘indoor switchgear’. The Enclosure shall be painted ANSI-61 light grey, using the manufacturer’s standard painting process.

C. Stationary Structure

1. The switchgear structure shall be constructed of formed sections of smooth and leveled steel, welded together and reinforced where necessary with formed steel members. The sides shall be covered with removable bolt on covers. The resulting structure shall be rigid and self-supporting.

2. The rear of the structure shall be covered with concealed hinged, padlockable steel doors for access to buses, connections, and other equipment mounted within. The ends of the structure shall be closed with removable steel panels held in place with slotted head bolts or concealed screws. The hinged access doors shall be provided with 2-point latches, door stops, structural reinforcing to prevent sagging and provisions for padlocking. Knurled screwhead type fasteners are not acceptable.

3. Secondary control devices and associated wiring shall be isolated from all high voltage primary devices by grounded metal barriers. Primary circuits such as circuit breakers, transformers, and buses shall also be isolated from each other and from personnel by grounded metal barriers.

4. The assembly shall be provided with adequate lifting means and shall be capable of being moved into installation position and bolted directly to **ELECTRICAL**

SUBCONTRACTOR supplied floor sills to be set level in concrete per manufacturer's instructions. Provisions shall be made for jacking of shipping groups for removal of skids or insertion of equipment rollers. Base of assembly shall be suitable for rolling directly on pipes without skids.

5. Each vertical steel unit forming part of the switchgear line-up shall be a self-contained housing having one or more individual breaker or instrument compartments, a centralized main bus compartment, and a rear cabling compartment. Each individual circuit breaker compartment shall be segregated from adjacent compartments and sections, including the bus compartment, by means of grounded steel barriers. It shall be equipped with draw-out rails and primary and secondary disconnecting contacts. Current transformers for feeder instrumentation, where indicated on the Drawings, shall be located within the appropriate breaker cells.

6. The stationary part of the primary disconnecting devices for each power circuit breaker shall consist of a set of contacts extending to the rear through a glass polyester insulating support barrier; corresponding moving finger contacts suitably spaced shall be furnished on the power circuit breaker studs which engage in only the CONNECTED position. The assembly shall provide multiple silver-to-silver full floating high pressure point contacts with uniform pressure on each finger maintained by springs. Each circuit shall include the necessary three-phase bus connections between the section bus and the breaker line side studs. Load studs shall be equipped with insulated copper load extension busses. Bus extensions shall be tin-plated where outgoing terminals are attached.

7. The secondary disconnecting devices shall consist of floating fingers mounted on the removable unit and engaging flat contact segments at the rear of the compartment. The secondary disconnecting devices shall be silver-plated and sliding contact engagement shall be maintained in the CONNECTED and TEST positions.

8. The removable power circuit breaker element shall be equipped with disconnecting contacts, and interlocks for drawout application. It shall have four positions, CONNECTED, TEST, DISCONNECTED and REMOVE all of which permit closing the compartment door. Breakers shall be dead-front, through door construction, allowing racking with the door closed. The breaker draw-out element shall contain a worm gear levering "in" and "out" mechanism with removable lever crank. Mechanical interlocking shall be provided so that the breaker is in the tripped position before levering "in" and "out" of the cell. The breaker shall include a provision for padlocking open to prevent manual or electric closing. The padlocking shall also secure the breaker in the CONNECTED, TEST, or DISCONNECTED position by preventing levering.

9. An insulating flash shield shall be mounted above each circuit breaker to prevent flashover from the arc chutes to ground.

10. Hinged doors shall be provided for the fronts of the draw-out circuit breaker compartments.

11. Hinged panels shall be provided for mounting of meters, protective relays, and other devices. Doors and panels shall be equipped with concealed hinges and suitable latches. Doors and panels shall have one-inch (1") deep formed edges with double returns where necessary to assure stiffness.

12. A glass polyester safety shutter shall be furnished to automatically cover the bus stabs in the circuit breaker compartment when the circuit breaker unit is moved to the TEST, DISCONNECTED, or REMOVE position.

13. Provide a rear compartment steel barrier between the cable compartment and main bus to protect against inadvertent contact with the main or vertical bus bars. Provide full height and depth metal barriers between adjacent vertical structures in the cable compartment. Provide a full height and depth glass polyester barrier with appropriate slots for the main bus between adjacent vertical structures in the bus compartment.

14. Equip each cable compartment with cable lug adapters complete with hydraulic compression lugs which can be mounted up or down at a 45 degree angle to facilitate cable termination with a minimum bending radius. Provide lugs including grounding lugs, suitable for copper cable, of quantity and size required for the cables indicated on the Drawings. Mechanical type lugs utilizing a set screw are not acceptable.

15. Except as otherwise described herein, all "space" compartments specified herein or indicated on the Drawings shall be furnished as "prepared spaces" or "futures" complete with buses, supports, insulators, primary and secondary disconnects, lugs for future outgoing cables, and rails ready to receive a future circuit breaker of appropriate size. Insulating barriers shall be installed in the cubicles to cover all live terminals to prevent accidental contact.

16. The withdrawal type units and the stationary sections for these units shall be assembled in jigs which accurately locate the contacts, holding devices, and interlocks. One removable unit of each type and rating shall be tried in each stationary compartment of same type and rating. Each stationary compartment shall be checked with its own removable unit to insure interchangeability.

17. Where designated as ‘outdoor’, enclosure shall include the following features:

    a. The enclosure shall be provided with rear hinged doors complete with wind stops for each section. Provide necessary space heaters thermostatically controlled for breakers, bus, and cable compartments of adequate wattage to prevent the accumulation of moisture within the compartments.

b. The construction of the enclosure shall be modular so future sections can be added without affecting NEMA 3R integrity.

c. The enclosure shall be provided with undercoating applied to all members in contact with the foundations surface to retard corrosion.

d. Power for the space heaters and enclosure lights shall be obtained from an internal power supply. Supply voltage to the loads shall be 120 volts VAC.

D. Bus

1. Buses and main connections shall consist of tin-plated flat copper bars or copper channels of suitable size carried on supports fabricated from an approved insulating material. The buses shall be mounted in a compartment at the rear or above the circuit breakers. Bus sizes shall be based upon a maximum current density of 1000 amperes per square inch. All bus connections, including shipping breaks and for future bus extensions, shall be silver-plated and tightly clamped with through bolts. Provide all bus joints with Bellville type spring washers. Buses shall have a continuous current-carrying capacity of not less than that specified herein or indicated on the Drawings.

2. Insulate/isolate buses to protect against spread of arcing faults and accidental contact by people or foreign objects.

3. Provide the 3-phase bus of each unit with insulation to completely encase each bar, including where provisions have been made by splicing adjacent units together, or making connections to disconnecting devices.

4. Fabricate bus bar molded insulation, molded insulation covers for bus joints, and bus insulated supports from insulation possessing flame-retardant and self-extinguishing, dielectric and anti-hydroscopic properties.

5. Provide a neutral landing lug in the incoming cable area to allow landing of all neutral conductors as indicated on the Drawings. Provide a bonding jumper from the neutral lugs to the ground bus for service entrance rated assemblies.

6. A tin-plated ground bus of adequate capacity (1/4-inch by 2-inch minimum) shall be furnished and installed throughout the switchgear structure. Each stationary unit shall be effectively connected to this ground bus. A substantial ground contact shall be provided between each breaker and removable element and the ground bus, which shall automatically be made before the primary contacts touch. Contact engagement to the ground bus shall be maintained in the CONNECTED and TEST positions. Ground relay panels with a No. 6 AWG insulated copper wire to the ground bus.

7. Main and ground buses shall be extended through all units, including spares and prepared spaces.

E. Removable Element

1. Removable element of each circuit breaker unit shall consist of a 3-pole power circuit breaker with trip-free stored-energy mechanism, positive mechanical interlock, primary and secondary disconnecting devices, auxiliary switches, position indicator, and control wiring. The removable element shall have four positions: CONNECTED, TEST, DISCONNECTED, and REMOVE, all of which permit closing of the compartment door.

2. Provide for mechanical locking of the removable element in the TEST and DISCONNECTED position. Lock shall not interfere with operation of the breaker and its mechanism.

3. Provide an interlock on each circuit breaker unit to prevent the circuit breaker from being removed while breaker is closed and to prevent breaker from being placed in CONNECTED position unless the breaker is open. If the circuit breaker is closed, the interlock shall trip the breaker before it can be placed in CONNECTED position.

F. Circuit Breakers

1. Each circuit breaker shall be draw-out type and enclosed in a separate metal compartment.

2. Circuit breakers shall be rated in accordance with Underwriters Laboratories Standards, with the following minimum ratings:

   a. Nominal voltage: 480 volts.

   b. Maximum design voltage: 600 volts

   c. Low frequency withstand: 2.2 kV

   d. Frame continuous current rating: as indicated on the Drawings.

   e. Sensor rating: Same as frame rating.

   f. Rated interrupting time: 5 cycles.

   g. Rated closing time: 3 cycles

   h. Interrupting capability at rated voltage: 65,000 amperes (symmetrical). To assure a fully selective system, all circuit breakers shall have 30 cycle short time withstand ratings equal to their symmetrical interrupting ratings, regardless of whether equipped with instantaneous trip protection or not.

i. Where circuit breakers are equipped with current limiters, the combination shall have short time ratings in accordance with the characteristics of the limiter selected.

3. Circuit breakers shall be UL listed for application in their enclosures for 100 percent of their continuous current rating.

4. Circuit breakers shall utilize a two-step stored-energy mechanism to charge the closing springs. The closing of the breaker contacts shall automatically charge the opening springs to ensure quick-break operation. Slow closing speed shall not be required to properly maintain the breaker contacts. Circuit breakers of equal rating shall be completely interchangeable.

5. Breakers shall be manually operated (MO) unless electrically operated (EO) is indicated on the drawings.

6. Electrically operated breakers shall be complete with 120 Vac motor operators. The charging time of the motor shall not exceed 6 seconds.

7. Equip each circuit breaker with secondary disconnecting contacts to automatically engage in the CONNECTED and TEST position to complete circuits as required.

8. Provide a means for racking in and out of the compartment and between positions. Provide a means for holding the circuit breaker in the compartment in all positions. Include a provision for padlocking open to prevent manual or electric closure of the circuit breaker.

9. Provide interlocking to prevent a closed-circuit breaker from racking to or from any position. Provide an additional interlock to assure automatic discharging of the closing springs upon insertion or removal of the breaker into or out of the compartment.

10. Provide key interlocks as indicated on the Drawings.

11. Each low voltage power circuit breaker shall be equipped with current sensors and a self-powered microprocessor-based trip device to sense overload and short circuit conditions. Trip devices shall be interchangeable so that any trip device can be used with any frame size circuit breaker. The device shall measure true RMS currents. Peak sensing devices will not be accepted. All adjustment setting switches shall be digitally encoded type with gold contacts. Trip units shall be removable.

12. Equip each circuit breaker with a Eaton PXR-25, Siemens ETU-745, Micrologic 7.0 by Square D Company, or ABB equivalent microprocessor based trip unit complete with rating plug size as indicated on the Drawings. The trip units shall be furnished complete with all additional modules required to facilitate all trip unit functions. Trip units shall have adjustable long, short, instantaneous and ground

fault functions. Circuit breaker trip units (where indicated) shall be provided with an energy reduction maintenance switch (ERMS) mechanism to reduce arc-flash energy. The trip unit manufacturer shall match the manufacturer of the circuit breakers and other components of the switchgear assembly.

13. A programmable alarm relay output shall be provided to activate based on threshold and time delay values associated with any of the measured parameters. Alarm output operation shall be recorded in an event log.

14. The trip unit shall include an integral test pushbutton. A keypad shall be provided to enable the user to select the values of test currents within a range of available settings. The protection functions shall not be affected during test operations. The breaker may be tested in the TRIP or NO TRIP test mode.

15. Circuit breakers shall be equipped with a self coupling primary and secondary disconnect contacts and arranged with a disconnect mechanism for moving it physically between the CONNECTED and DISCONNECTED positions.

16. A TEST position for each circuit breaker shall be provided and so interlocked to ensure proper sequence and safe operation.

17. Each circuit breaker faceplate shall include a draw-out position indicator, spring charge indictor, push-to-trip button, push-to-close mechanism release button, and open-close indicator.

18. Each circuit breaker shall be provided with "a" and "b" auxiliary contacts which will open or close when the breaker is open or closed. Each breaker shall also be provided with an alarm switch or contact to indicate that the breaker has tripped. All of these contacts shall be wired to terminals in each compartment for use in indicating breaker status. Each circuit breaker shall be furnished with enough auxiliary contacts to indicate breaker position as required for this Contract. Reference Section 40 61 93 – Process Control System Input/Output List and Section 40 61 96 – Process Control Descriptions.

G. Automatic Throwover Control System (and/or Automatic Breaker Control)

1. Where indicated on the Drawings, provide a microprocessor-based control system to provide all the operational functions indicated and described below. The controller shall have two asynchronous serial ports. The controller shall have a real time clock with Nicad battery back-up.

2. The CPU shall be equipped with self-diagnostics which perform periodic checks of the memory, I/O, and communication circuits with a watchdog power fail circuit.

3. The controller shall use industry standard open architecture communication protocol for high speed serial communications via multidrop connection to other controllers and to a master terminal with up to 4000 ft of cable, or further with the

addition of a communication repeater. The serial communication port shall be RS422/485 compatible.

4. The serial communication port shall allow interface to either the manufacturer's or the Owner's furnished remote supervisory control system.

5. The controller shall have password protection to limit access to authorized personnel.

6. The controller shall include an LCD display with touch controls, which allows access to the system.

7. The controller shall include three-phase over/under voltage, over/under frequency, phase sequence detection, and phase differential monitoring on both normal and standby sources.

8. The controller shall be capable of storing the following records in memory for access either locally or remotely:

    a. Number of hours the transfer switch is in the standby position (total since record reset).

    b. Number of hours standby power source is available (total since record reset).

    c. Total transfer in either direction (total since record reset).

    d. Date, time, and description of the last four source failures.

    e. Date of the last exercise period.

    f. Date of record reset.

9. Light emitting diodes shall be mounted on the controller to indicate:

    a. Source(s) available.

    b. Source(s) preferred.

    c. Source(s) connected.

10. Display shall indicate within 1% accuracy all three separate phase-to-phase voltages simultaneously for each source.

11. Display shall indicate within 1% accuracy frequency for each source.

12. Display shall indicate source availability and whether preferred or non-preferred.

13. The microprocessor controller shall meet the following requirements:

Storage conditions:	25°C to 85°C
Operation conditions:	20°C to 70°C ambient
Humidity:	0 to 99% relative humidity, non-condensing
Capable of withstanding infinite power interruptions	

Surge withstand per ANSI/IEEE C-37.90A-1978

14. All control wiring shall be 14 gauge (minimum), 600 VAC, SIS switchboard type. All control wiring shall be identified at each termination (both ends) using tubular, sleeve-type wire markers.

15. The automatic transfer switch controller shall be of the same manufacturer of the provided switchgear equipment. The controller shall be programmed by the manufacturer at the factory.

H. Operation and Interlocks for the 480V Switchgear

1. Unless the switchgear is equipped with automatic transfer control, automatic throwover, or automatic breaker controls - The main breakers shall be interlocked with the bus tie breaker by key interlocks. Key interlocks shall be accessible without opening the circuit breaker compartment door and shall function as follows:

    a. Permit closing one or both main breakers when the bus tie breaker is OPEN.

    b. Prevent closing the bus tie breaker when both main breakers are CLOSED.

    c. Permit closing the bus tie breaker when one or both main breakers are OPEN.

    d. Permit closing of only one main breaker when the bus tie breaker is CLOSED.

    e. These key interlocks are in addition to electrical interlocks specified herein or indicated on the Drawings.

2. Where switchgear is equipped with automatic transfer control, automatic throwover, or automatic breaker control an additional control provision shall be hardwired to trip the tie breaker(s) in the event all main and tie breakers are racked in and both mains are closed.

3. Sequence of Operation

a. Outdoor Switchgear SWGR-01 shall operate normally with the main utility breaker and (2) SWGR-02 feeder breakers in the CLOSED position and the 2000kW generator, future power source, and spare breakers in the OPEN position.

1) Should the voltage on any phase of the normal source drop below 80 percent or increase to 120 percent, or frequency drops below 90 percent, or increases to 110 percent, or 20 percent voltage differential between phases occur, after a programmable time delay period of 0-9999 seconds factory set at three (3) seconds to allow for momentary dips, the engine starting contact(s) of the ATC controller shall close to start the standby plant.

2) Transfer to the standby power source shall occur when 90 percent of rated voltage and frequency has been reached by the standby power source.

3) After restoration of normal power on all phases to a preset value of 90 percent to 110 percent of rated voltage, at least 95 percent to 105 percent of rated frequency, and voltage differential is below 20 percent between phases, an adjustable time delay period of 0-9999 seconds factory set at 300 seconds shall delay the transfer to allow stabilization of the normal source. Should the standby source fail during this time delay period, the ATC controller shall automatically initiate retransfer to the normal source.

4) After retransfer to the normal power source, the standby plant shall operate at no load for a programmable period of 0-9999 seconds factory set at 300 seconds. Should the normal power source fail during this time delay period, the ATC controller shall automatically intiate return to the standby source.

5) The existing 800kW standby generator shall be utilized to provide standby power to the existing Rapid Sand Filter Building and new Dewatering Building. The SWGR-01 ATC controller shall be provided with sufficient contacts and programming to provide the following additional functions, as described below. **ELECTRICAL SUBCONTRACTOR** shall coordinate installation and programming requirements between SWGR-01 ATC controller, 800kW standby generator controller, Rapid Sand Filter Building Switchgear ATC system, and the new Dewatering Building automatic transfer switches.

a) Upon loss of utility source, ATS-4A-DWB and ATS-4B-DWB shall switch to center-off (neutral) position. Rapid Sand Filter Switchgear utility source breaker shall switch to OPEN position.

b) Upon start and transfer of SWGR-01 to the 2000kW standby generator source, ATC controller shall inhibit retransfer to ‘Source 1’ for the ATS’s and utility source at the Rapid Sand Filter Switchgear.

c) Return to ‘Source 1’ for the ATS’s and utility source at the Rapid Sand Filter Switchgear shall only occur once the utility source has been adequately restored at SWGR-01.

b. Indoor Switchgear SWGR-02 shall operate normally with the two 480V bus sections will operate independently with the (2) main breakers in the CLOSED position and the (2) bus tie breakers in the OPEN position.

1) Should the voltage on any phase of the normal sources drop below 80 percent or increase to 120 percent, or frequency drops below 90 percent, or increases to 110 percent, or 20 percent voltage differential between phases occur, after a programmable time delay period of 0-9999 seconds factory set at three (3) seconds to allow for momentary dips, the ATC controller shall initiating opening of the respective main breaker and closing of the (2) bus tie breakers. In the event that both sources have ‘failed’ based on the criteria above, no state change of any breaker shall be initiated.

2) After restoration of power on all phases to a preset value of 90 percent to 110 percent of rated voltage, at least 95 percent to 105 percent of rated frequency, and voltage differential is below 20 percent between phases, for an adjustable time delay period of 0-9999 seconds factory set at 300 seconds, the ATC controller shall indicate that source is ‘available’. Retransfer shall occur manually by personnel.

I. Current Transformers

1. Ring type current transformers shall be dry type, for indoor service, insulated for 600 volts, 10 kV BIL. Design shall have a mechanical and thermal rating to withstand short-circuit current, stresses, and heating effects equal to the rating of the circuit breaker of the application.

2. Current ratio shall be as indicated on the Drawings. Where ratios are not shown on the drawings they shall have primary amperage rating equal to the bus or circuit breaker frame rating and a secondary of 5 Amps.

3. Transformers shall be rated in accordance with ANSI Standard C37.20.1 and IEEE C57.13, accuracy class 0.3. Furnish CTs with metering burden designation B-0.3, minimum. The transformers shall be sized for the necessary burden for the required devices, minimum.

4. Identify the current transformers for polarity with standard marking or symbols. The transformers shall be capable of carrying rated primary current continuously without damage.

5. Run secondary wiring from current transformers in suitable wiring trough, or conduit, to proper short-circuiting type terminal blocks for connection to relays, instruments, and other devices.

6. Door mounted test blocks for all current transformers in the switchgear shall be provided.

J. Potential Transformers

1. Potential transformers shall be indoor dry type, single-phase, 60 hertz.

2. Potential transformers shall have an accuracy classification determined according to ANSI Standards. The potential transformers shall be suitable for metering accuracy, the burden to be served for the required devices plus 20 percent, and shall meet the following minimum requirements:

   a. BIL: 10kV

   b. Primary Voltage: 480 volts

   c. Secondary Voltage: 120 volts

   d. Winding Ratio: 4:1

   e. Metering Accuracy Class: 0.3 at rated burden

3. Identify polarity with standard markings or symbols. Connect secondaries to potential buses as required. Protect potential transformers with primary and secondary fuses. Protect primary side with current-limiting fuses.

4. Door mounted test switches located at the switchgear. Test switch wiring shall be plainly marked to indicate the respective circuits to each pole of the switch. Test switches shall be ABB Flexitest Type FT-1 with clear cover, GE/Multilin equivalent, or equal.

K. Control Power Transformers

1. Provide 480 to 120 VAC control power transformers. Verify that control power transformers have adequate capacity for the load to be served. Provide control power transformers for each power source.

2. Protect control power transformers with both primary and secondary fuses. Protect primary side with current limiting fuses. Provide a manual disconnect ahead of the primary fuses.

3. Control power transformers for space heaters, lighting, and other ancillary loads shall be separate from those used for control circuits.

L. Control Power Transfer and UPS Equipment

1. Control power transformers for control circuits shall be connected via an automatic transfer relay(s) to switch between sources upon loss of power to the other source(s).

2. The load side of the transfer relay shall provide power to a Static Uninterruptible Power Supply sized for and connected to the control circuit loads.

M. Control Wiring and Control Terminal Blocks

1. Wire and factory test switchgear to satisfy the requirements of the operation described or necessary.

2. Switchgear secondary wiring shall be NEC Type SIS, single-conductor, stranded copper, rated 600 volts, 90°C bundled and secured with nylon ties. Provide flexible stranding for swinging doors and panels. Minimum wire size shall be No. 14 AWG for voltage transformer wiring, interlock wiring, and control circuit wiring. For current transformer circuits, minimum wire size shall be No. 12 AWG. Number 10 AWG or larger wire shall be used to decrease resistance as required.

3. Route outgoing control wires for outgoing or "cell-to-cell" interconnecting wiring to the master terminal blocks with suitable numbering strips numbered in agreement with the manufacturer's detailed wiring diagrams. Provide a minimum of 10 percent (10%) spare terminal blocks for each circuit breaker and auxiliary compartment.

4. Terminal blocks for control wiring shall be provided in accordance with Section 26 09 16 – Electric Controls and Relays.

5. Number wiring with shrink-type tag devices at both ends consistent with the manufacturer's detailed wiring diagrams. Duplication of wire numbers and terminal block numbers is not acceptable.

6. One control power circuit cut-out device shall be furnished in each circuit breaker housing. If cut-out device has exposed conductors (i.e., knife switch), the exposed conductors shall be suitably protected against inadvertent contact.

N. Analog Indicating Instruments

1. Provide analog indicating instruments where shown on the Drawings. Instruments shall be door-mounted and shall be in accordance with ANSI C39.1, 1 percent accuracy class, 4-1/2 inch nominal square, with 250 degrees scale unless otherwise noted.

2. Analog indicating instrument switches shall be door-mounted, rotary operated type with means for maintaining contact position. Contacts shall be silver-to-silver, enclosed in easily removable protective covers.

O. Control Devices

1. Furnish and install control devices as required and/or shown on the Drawings. The following control devices shall be provided as specified in Section 26 09 16 – Electric Controls and Relays:

   a. Pilot devices (switches, indicating lights, etc).

   b. Relays and timers.

2. For each circuit breaker indicated on the Drawings or specified herein as electrically-operated (E.O.), provide door-mounted circuit breaker pistol grip control switch with red (closed) and green (open) indicating lights to indicate breaker contact position. Provide amber indicating lights to indicate breaker lockout status and tripped status, and blue indicating lights for trip coil status monitor.

P. Nameplates

1. Provide engraved plastic nameplates to identify switchgear units, door mounted devices, and internal components.

2. Nameplates shall be as specified in Section 26 05 53 – Identification for Electrical Systems engraved with the circuit number and circuit name as indicated on the Drawings.

3. Label the switchgear per the requirements of MEC, Articles 110-21 and 110-22.

Q. Power Metering

1. Provide a PXM-1300 as manufactured by Eaton, a Powerlogic ION-7550 with as manufactured by Square D Company, or Multilin EPM 9000 with display as manufactured by ABB/General Electric Company. Power metering manufacturer shall match the manufacturer of the circuit breakers and other components of the switchgear assembly. Provide the quantity indicated on the Drawings.

2. Power meter shall be provided with 1GB of memory, minimum, and network communications port. A hardware gateway shall be provided in each half of the switchgear. Each hardware gateway shall convert the network communications from the respective meter to the EtherNet\IP protocol for communication of metering parameters to the plant control system. The following parameters shall be communicated as a minimum:

   a. Current (all phases).

b. Voltage (all phases).

c. KW, KVAR, KVA.

d. Power Factor.

R. Warning Signs

1. Provide a minimum of 2 warning signs on the front of the switchgear lineup and 2 on the back.

a. Red laminated plastic engraved with white letters approximately ½-inch high.

b. Signs shall read "DANGER HIGH VOLTAGE"

S. Source Quality Control

1. Completely assemble, wire, and test switchgear at the factory. Detailed inspections before and after assembly shall assure correctness of design and workmanship. Provide groups of wires leaving the shipping-assembled equipment with terminal blocks with suitable numbering strips.

2. After assembly, provide the switchgear with lifting channels having eyebolts for attachment of crane slings to facilitate lifting and handling each shipping-assembly unit. These lifting channels shall be removable after equipment is placed on permanent foundations.

T. Accessories

1. Switchgear accessories shall be provided as follows:

a. Manual handles for operating circuit breakers.

b. One complete integral lifting device consisting of rails, hoist and dolly shall be furnished for each switchgear assembly for installing or removing breakers. The elevating table type lifting device is not acceptable.

c. Secondary couplers for operating a power circuit breaker in the DISCONNECTED position.

d. Auxiliary power module to provide power for testing the trip unit when the breaker is in the DISCONNECTED or REMOVED position.

e. Test plugs for draw-out relays and meters.

f. Auxiliary switches with at least two (2) unused normally open and two (2) unused normally closed contacts on each circuit breaker.

g. Minimum of two (2) 4” infrared inspection ports in the rear door of each section. IR ports shall be located to allow IR observation of all cable terminations within the rear cable compartment. IR ports shall meet requirements of IEEE C37.20.1, shall maintain NEMA rating of switchgear enclosure even when in use.

U. Surge Protective Devices

1. Surge protective devices (SPD) shall be provided either integral to the switchgear enclosure or as a separate unit external to the switchgear enclosure (when indicated on the Drawings). See Section 26 43 13 – Surge Protective Devices for SPD requirements.

V. Generator Load Bank Panel

1. For SWGR-01, provide a quick connect load bank panel accessible from the exterior of the switchgear enclosure for a convenient way to connect the load bank to the switchgear circuit breaker.

2. The quick connect panel shall be integrated with the breaker with same rating as circuit breaker.

3. The load bank panel shall be provided with a provision for key interlock. The provision will be on the breaker.

4. Cables shall enter and exit the wiring chamber via access holes specifically designed for conductors and shall be provided with a bushing or shall be formed so that there are no sharp edges with which conductor insulation may come in contact. Connections shall be arranged so that cables drape downward when connected.

5. A barrier with slots to allow cables into the panel shall be provided to restrict access to cabling while connected, reducing the possibility of unintended access.

6. The quick connect panel shall have output connections rated up to 600 VAC, per the required configuration.

a. Output Panels - Female connectors with clear protective covers.

b. Connections shall be cam type single pole connectors and shall be available color coded as per industry standard practice for 480V:

1) Phase 1 = Brown,

2) Phase 2 = Orange,

3) Phase 3 = Yellow.

4) Neutral shall always be white.

7. Permanent Conductors

a. The upper chamber shall be provided with lug terminals for the permanently installed conductors from the circuit breaker.

1) For 3000A, there shall be (10) 1/0 AWG – 600MCM mechanical lugs per phase.

2) For 4000A, there shall (12) 1/0 AWG – 600MCM mechanical lugs per phase.

8. Temporary Conductors

a. The lower chamber shall have the cam type single pole connectors as required:

1) For 3000A, there shall be eight (8) rows of up to five (5) single pole connections. WCR Rating: 100kA RMS Symmetrical at 480V.

2) For 4000A, there shall be ten (10) rows of up to five (5) single pole connections. WCR Rating: 100kA RMS Symmetrical at 480V

9. Signal Connections

a. The Load bank Panel shall be provided with a terminal block for a load dump signal.

PART 3 – EXECUTION

3.01 INSTALLATION

A. The switchgear shall be furnished and installed as shown on the Drawings and in accordance with the manufacturer's installation instructions. One (1) copy of these instructions shall be included with the equipment at time of shipment. The equipment shall be suitably protected and space heaters connected until accepted by the Owner.

B. Furnish and install structural mounting channels in accordance with manufacturer's recommendations to provide proper alignment of the units.

C. The equipment shall be installed and checked in accordance with the manufacturer's recommendations. This shall include but not limited to:

1. Checking to ensure that the pad location is level to within .125 inches.

2. Checking to ensure that all bus bars are torque to the manufacturer's recommendations.

3. Assemble all shipping sections, remove all shipping braces and connect all shipping split mechanical and electrical connections.

4. Secure assemblies to foundation or floor channels.

5. Inspect and install all circuit breakers in their proper compartments.

D. Install the switchgear to allow complete unit door swing required for unit removal. This is specifically required where a vertical section of switchgear is set next to a wall to the left of a switchgear section.

3.02 PAINTING

A. Prior to final completion of the work, all metal surfaces of the equipment shall be cleaned thoroughly, and all scratches and abrasions shall be retouched with the same coating as used for factory finishing coats.

3.03 TESTING

A. All tests shall be performed in accordance with the requirements of the General Conditions and Division 01. The following tests are required:

1. Witnessed Shop Tests

a. The switchgear specified in this Section shall be witness shop tested and inspected in accordance with the equipment manufacturer's standard procedures. The testing and inspection procedures shall demonstrate that the equipment tested conforms to the requirements specified and shall be approved by the Engineer. At least 10 days’ notice shall be given the Engineer prior to such tests and inspection dates.

2. Certified Shop Tests and Reports

a. Submit description of proposed testing methods, procedures, and apparatus.

b. Submit notarized and certified copies of all test reports.

c. As a minimum, the entire switchgear assembly shall go through a quality inspection before shipment. This inspection shall include, but is not limited to, the following:

1) Physical inspection of the structure and the electrical conductors including bussing, general wiring, and units.

2) General electrical tests including power circuit phasing, control circuit wiring, instrument transformers, meters, ground fault system, and device electrical operation.

3) AC dielectric tests of the power circuits and control circuits.

4) Markings/labels, including instructional type, Underwriters Laboratory (U.L.), and inspector's stamps.

d. The manufacturer shall use integral quality control checks throughout the manufacturing process to maintain the correctness of the switchgear.

3. Field Tests

a. Field tests shall be performed in accordance with requirements specified in the General Conditions, Division 01, and NETA Acceptance Testing Specifications, latest edition.

b. The manufacturer’s technical representative shall perform startup and functional testing of the switchgear controls. Functional testing shall include field verification of each and every part of the sequence of operations listed herein. Representatives from the Owner and the Engineer shall be present to witness the functional testing.

c. Prior to commencement of the functional testing, a test plan shall be submitted for Owner and Engineer approval. Test plan shall demonstrate how each part of the sequence of operations will be tested, and shall detail any required outages, switchovers, or the like that must be performed during the testing.

3.04 SERVICES OF MANUFACTURER'S REPRESENTATIVE

A. The **ELECTRICAL SUBCONTRACTOR** shall provide the services of a qualified, factory-trained manufacturer's technical representative who shall adequately supervise the installation and testing of all equipment furnished under this Contract. The manufacturer's representative shall certify in writing that the equipment has been installed in accordance with the manufacturer's recommendations. No further testing or equipment startup may take place until this certification is accepted by the Owner.

B. The manufacturer’s technical representative shall perform startup and functional testing of the switchgear and controls as specified herein.

C. The **ELECTRICAL SUBCONTRACTOR** shall provide training for Owner personnel. Training shall be conducted by the manufacturer's factory-trained representative who shall instruct Owner personnel in operation and maintenance of all equipment provided under this Section. Training shall be provided for two (2) sessions of eight (8) hours

each. Training shall not take place until after all switchgear units have been installed and energized. Training shall be at times coordinated with the Owner.

D. The services of the manufacturer's representative shall be provided for a period of not less than as follows:

1. One (1) trip of two (2) working days during the installation of the switchgear.

2. One (1) trip of two (2) working days for the testing and startup of the switchgear.

3. One (1) trip of five (5) working days to perform the functional testing of the entire switchgear assembly and controls.

4. One (1) trip of two (2) working days to perform training as specified herein.

5. One (1) trip of one (1) working day two (2) months before the warranty expiration to identify issues to be corrected under warranty.

E. Any additional time required to achieve successful installation and operation shall be at the expense of the **ELECTRICAL SUBCONTRACTOR**.

3.05 FIELD ADJUSTMENTS

A. The protective relays and/or trip units shall be set in the field by a qualified representative of the manufacturer, or an outside testing company retained by the **ELECTRICAL SUBCONTRACTOR**, in accordance with the settings designated in the coordination study. See Section 26 05 00 – Basic Electrical Requirements.

END OF SECTION

NO TEXT ON THIS PAGE

THIS PAGE INTENTIONALLY LEFT BLANK

ATTACHMENT AH – 26 24 13 LOW VOLTAGE SWITCHBOARDS

DIVISION 26

ELECTRICAL

(FILED SUB BID REQUIRED)

SECTION 26 24 13
LOW VOLTAGE SWITCHBOARDS[1]

PART 1 – GENERAL

1.01 FILED SUB-BID REQUIREMENTS

A. This Section is part of the filed sub-bid for Division 26 – Electrical. See Section 26 05 00.

1.02 THE REQUIREMENT

A. The Electrical Subcontractor shall furnish, install, test, and place in satisfactory operation, the low voltage switchboards as specified herein and indicated on the Drawings.

B. The line-up shall contain circuit breakers and all accessories as specified herein, indicated on the Drawings, and as required to result in a complete and operable power distribution equipment assembly.

C. The Electrical Subcontractor shall obtain the switchboard from one manufacturer who shall also manufacture the structure and major equipment components, which includes, but is not limited to, circuit breakers, instrument transformers, meters, relays, and controls. Sub-contracting of wiring is not acceptable.

D. The switchboard shall be assembled using NEMA rated components. Components designed and built to International Electrotechnical Commission (IEC) standards are not recognized. Equipment designed, manufactured and labeled in compliance with IEC standards is not acceptable.

E. Circuit breaker control and relaying/metering circuits shall be wired in accordance with the requirements specified herein or indicated on the Drawings.

1.03 CODES AND STANDARDS

A. All equipment shall be listed by and shall bear the label of Underwriter's Laboratories, Incorporated (U.L.).

B. The equipment shall comply with the following codes and standards:

---

1 Addendum No.5

1. National Electrical Code (NEC)

2. Institute of Electrical and Electronic Engineers (IEEE)

3. American National Standards Institute (ANSI):

    a. C12.1 – Code for Electricity Metering

    b. C57.13 – Instrument Transformers.

4. National Electrical Manufacturer's Association (NEMA):

    a. AB 1 – Molded Case Circuit Breakers and Molded Case Switches.

    b. PB 2 – Deadfront Distribution Switchboards.

5. Underwriters Laboratories, Inc. (U.L.):

    a. U.L. 98 – Enclosed and Dead Front Switches.

    b. U.L. 489 – Molded Case Circuit Breakers.

    c. U.L. 891 – Dead-Front Switchboards.

1.04 SUBMITTALS

A. In accordance with the procedures and requirements set forth in the General Conditions and Section 01 33 00 – Submittal Procedures, the Electrical Subcontractor shall obtain from the equipment manufacturer and submit the following:

1. Shop Drawings

2. Operation and Maintenance Manuals

3. Spare Parts List

4. Reports of Certified Shop and Field Tests

5. Manufacturer’s Representatives Installation Certification

B. Each submittal shall be identified by the applicable Specification Section.

1.05 SHOP DRAWINGS

A. Each submittal shall be complete in all respects, incorporating all information and data listed herein and all additional information required for evaluation of the proposed equipment's compliance with the Contract Documents.

B. Partial, incomplete or illegible submissions will be returned to the Electrical Subcontractor without review for resubmittal.

C. Shop drawings for each switchboard assembly shall include but not be limited to:

1. A Compliance, Deviations, and Exceptions (CD&E) letter. If the shop drawings are submitted without this CD&E letter, the submittal will be rejected. The letter shall include all comments, deviations and exceptions taken to the Drawings and Specifications by the Electrical Subcontractor AND Equipment Manufacturer/Supplier. This letter shall include a copy of this Specification Section. In the left margin beside each and every paragraph/item, a letter "C", "D", or "E" shall be typed or written in. The letter "C" shall be for full compliance with the requirement. The letter "D" shall be for a deviation from the requirement. The letter "E" shall be for taking exception to a requirement. Any requirements with the letter "D" or "E" beside them shall be provided with a full typewritten explanation of the deviation/exception. Handwritten explanation of the deviations/exceptions is not acceptable. The CD&E letter shall also address deviations, and exceptions taken to each Drawing related to this Specification Section.

2. Product data sheets identifying all electrical ratings.

3. Complete assembly, layout, anchoring, and installation drawings with clearly marked dimensions.

4. Approximate total shipping weight of each equipment assembly.

5. Example equipment nameplate data sheet.

6. Plan, front and side view drawings, including overall dimensions of each switchboard assembly. Identify shipping splits and show conduit stub-up area locations on the Drawings.

7. Internal wiring diagram of each low voltage switchboard assembly. Each wiring diagram shall include wire identification and terminal numbers.

8. Internal interconnection wiring diagrams including wiring identification and terminal numbers.

9. Complete single line diagram for each switchboard line-up. The drawing shall indicate devices comprising the switchboard assembly including, but not limited to, circuit breakers, control power and instrument transformers, meters, relays, and control devices. Clearly indicate electrical ratings of all devices.

10. Bill of material list for each switchboard assembly.

11. Nameplate schedule.

12. Manufacturer's installation instructions.

13. Manufacturer's warranty statement.

14. The shop drawing information shall be complete and organized in such a way that the Engineer can determine if the requirements of these specifications are being met. Copies of technical bulletins, technical data sheets from "soft-cover" catalogs, and similar information which is "highlighted" or somehow identifies the specific equipment items the Electrical Subcontractor intends to provide are acceptable and shall be submitted.

1.06 OPERATIONS AND MAINTENANCE MANUALS

A. The Electrical Subcontractor shall submit operation and maintenance manuals in accordance with the procedures and requirements set forth in the General Conditions and Division 01. The manuals shall include:

1. Instruction books and/or leaflets.

2. Recommended spare parts list.

3. Final as-built construction drawings included in the shop drawings incorporating all changes made in the manufacturing process and field installation.

1.07 SPARE PARTS

A. The switchboard shall be furnished with all spare parts as recommended by the equipment manufacturer. All spaces in switchboards shall be furnished with a spare circuit breaker where indicated on the Drawings.

B. The spare parts shall be packed in containers suitable for long term storage, bearing labels clearly designating the contents and the pieces of equipment for which they are intended.

C. Spare parts shall be delivered at the same time as the equipment to which they pertain. The Electrical Subcontractor shall properly store and safeguard such spare parts until completion of the Work, at which time they shall be delivered to the Owner.

D. Spare parts lists, included with the shop drawing submittal shall indicate specific sizes, quantities, and part numbers of the items to be furnished. Terms such as "1 lot of packing material" are not acceptable.

E. Parts shall be completely identified with a numerical system to facilitate parts inventory control and stocking. Each part shall be properly identified by a separate number. Those parts which are identical for more than one size, shall have the same parts number.

1.08 IDENTIFICATION

A. Each switchboard assembly shall be identified with the identification name and/or number indicated on the Drawings (e.g., SWBD1). A nameplate shall be securely affixed in a conspicuous place on each switchboard assembly. Nameplates shall be as specified in Section 26 05 53 – Identification for Electrical Systems.

PART 2 – PRODUCTS

2.01 MANUFACTURERS

A. The equipment covered by these specifications is intended to be standard equipment of proven performance as manufactured by reputable concerns. Equipment shall be designed, constructed, and installed in accordance with the best practices of the trade, and shall operate satisfactorily when installed as shown on the Drawings.

B. It is the intent of these specifications that the switchboard be produced by a single manufacturer who shall be responsible for matching all components and providing equipment which functions together as a system.

C. The equipment shall be Pow-R-Line C as manufactured by Eaton, Spectra Series as manufactured by the General Electric Company, Square D Company equivalent, or Siemens Energy & Automation, Inc. equivalent.

2.02 CIRCUIT BREAKER SWITCHBOARD

A. General

1. Furnish and install dead-front type, completely metal enclosed, self-supporting electrical equipment including main circuit breaker(s) and molded case branch circuit breaker assemblies of the number, rating and type noted on the Drawings. The equipment shall meet Underwriters' Laboratories requirements and shall be a furnished with a U.L. service entrance label where indicated on the Drawings.

2. The main breaker section and distribution section shall be NEMA Type 1 (gasketed) industrial use enclosures. The main circuit breaker section shall be totally accessible from the front and the sides. The distribution switchboard shall be totally accessible from the front and the sides. Equipment assemblies requiring rear access are not acceptable. The framework shall be of U.L. gauge steel. Ventilation shall be provided as required.

3. All wire troughs shall have hinged doors.

4. The equipment assemblies shall be suitable for operation at the available fault current, 65 kA (minimum). The equipment assemblies shall be labeled to indicate the maximum available fault current rating, taking into account the structure,

bussing, main circuit breaker and switchboard branch circuit devices. The short circuit current rating shall not be less than that specified herein or indicated on the Drawings. The distribution switchboard branch circuit devices short circuit current rating shall be fully rated.

5. All bus shall be tin-plated copper. The bussing shall be of sufficient cross-sectional area to meet U.L. standard 891 for temperature rise. The fully rated main bus shall have a maximum ampacity as indicated on the Drawings and extend the full length of the equipment. The main bus shall be 100 percent rated. The ground bus shall be sized per U.L. standard 891, installed in the entire length of the equipment assemblies. The distribution switchboard bus shall be rated as required by the rating of the mounted branch devices, including spares or spaces. Full height vertical bus shall be provided to accommodate future circuit breakers. Less than full height vertical bus which will only accommodate the circuit breakers included for this project is unacceptable.

6. Provide engraved plastic nameplates to identify the main circuit breaker and each branch circuit breaker. The circuit number and circuit name shall appear on the nameplate in accordance with the single line diagram(s) indicated on the Drawings. Nameplates shall be as specified in Section 26 05 53 – Identification for Electrical Systems.

B. Utility Pull and Metering Section

1. The Electrical Subcontractor shall furnish and install a pull and metering section, as required, in accordance with all applicable utility requirements. This section shall be suitable for outdoor use if so directed by the utility.

2. During the design period, some information was gained from the utility regarding service requirements and is specified herein or shown on the Drawings.

3. The Electrical Subcontractor shall be responsible for all final coordination with the electric utility to furnish and install the necessary equipment to meet the latest utility requirements. This includes pull and metering section dimensions, materials of construction, location, bus/cable restrictions, and requirements for concrete pad, utility vault, bumper posts, and similar equipment.

C. Distribution Switchboard

1. The distribution switchboard shall be furnished complete with auxiliary section to accept an incoming bus duct connection. This auxiliary section shall be completely front accessible.

2. The auxiliary section shall also contain a CM-2450 Circuit Monitor as manufactured by Square D Company, an IQ Data Plus-4000 as manufactured by Cutler-Hammer/Westinghouse, or equal. All voltage and current transformers,

fuses, wiring, and other devices shall be furnished and installed to produce a complete monitoring system.

3. The distribution switchboard shall include individually mounted branch circuit breakers which are to be totally front accessible and front connectable. The circuit breaker connections to the distribution panel bussing shall be of bolt-on design such that the connections grip the bus bars firmly under high-fault conditions.

4. The switchboard manufacturer shall provide all the proper lugs for all cable connections as required to avoid field modifications.

5. Branch circuit breakers shall be molded case type with ratings as indicated on the Drawings. Some branch circuit breakers shall have shunt trips as indicated on the Drawings. Branch circuit breakers shall be rated for 65,000 A RMS symmetrical at 480V.

D. Surge Protective Devices

1. Surge protective devices (SPD) shall be provided either integral to the switchboard enclosure or as a separate unit external to the switchboard enclosure. See Section 26 43 13 – Surge Protective Devices for SPD requirements.

PART 3 – EXECUTION

3.01 INSTALLATION

A. The switchboard shall be furnished and installed as shown on the Drawings and in accordance with the manufacturer's installation instructions. One (1) copy of these instructions shall be included with the equipment at time of shipment. The equipment shall be suitably protected until accepted by the Owner.

B. The equipment shall be installed and checked in accordance with the manufacturer's recommendations. This shall include but not limited to:

1. Checking to ensure that the pad location is level to within .125 inches.

2. Checking to ensure that all bus bars are torqued to the manufacturer's recommendations.

3. Assemble all shipping sections, remove all shipping braces and connect all shipping split mechanical and electrical connections.

4. Secure assemblies to foundation or floor channels.

5. Inspect and install all circuit breakers in their proper places.

3.02 PAINTING

A. Prior to final completion of the work, all metal surfaces of the equipment shall be cleaned thoroughly, and all scratches and abrasions shall be retouched with the same lacquer as used for shop finishing coats.

3.03 TESTING

A. All tests shall be performed in accordance with the requirements of the General Conditions and Division 01. The following tests are required:

1. Witness Shop Tests

    a. The equipment specified in this Section shall be witness shop tested and inspected in accordance with the equipment manufacturer's standard procedures. The testing and inspection procedures shall demonstrate that the equipment tested conforms to the requirements specified.

2. Certified Shop Tests and Reports

    a. Submit description of proposed testing methods, procedures, and apparatus. Submit notarized and certified copies of all test reports.

    b. As a minimum, the entire switchboard assembly shall go through a quality inspection before shipment. This inspection shall include, but is not limited to, the following:

        1) Physical inspection of the structure and the electrical conductors including bussing, general wiring, and units.

        2) General electrical tests including power circuit phasing, control circuit wiring, instrument transformers, meters, ground fault system, and device electrical operation.

        3) AC dielectric tests of the power circuits and control circuits.

        4) Markings/labels, including instructional type, Underwriters Laboratory (U.L.), and inspector's stamps.

    c. The manufacturer shall use integral quality control checks throughout the manufacturing process to maintain the correctness of the switchboard.

3. Field Tests

    a. Field tests shall be performed in accordance with requirements specified in the General Conditions, Division 01, and NETA Acceptance Testing Specifications, latest edition

3.04 SERVICES OF MANUFACTURER'S REPRESENTATIVE

A. The Electrical Subcontractor shall provide the services of a qualified, factory-trained manufacturer's technical representative who shall adequately supervise the installation and testing of all equipment furnished under this Contract. The manufacturer's representative shall certify in writing that the equipment has been installed in accordance with the manufacturer's recommendations. No further testing or equipment startup may take place until this certification is accepted by the Owner.

B. The manufacturer’s technical representative shall perform startup and functional testing of the switchboard and controls as specified herein.

C. The Electrical Subcontractor shall provide training for Owner personnel. Training shall be conducted by the manufacturer's factory-trained representative who shall instruct Owner personnel in operation and maintenance of all equipment provided under this Section. Training shall be provided for two (2) sessions of four (4) hours each. Training shall not take place until after all switchboard units have been installed and energized. Training shall be at times coordinated with the Owner.

D. The services of the manufacturer's representative shall be provided for a period of not less than as follows:

   1. One (1) trip of two (2) working days during the installation of the switchboard.

   2. One (1) trip of two (2) working days for the testing and startup of the switchboard.

   3. One (1) trip of one (1) working day to perform training as specified herein.

   4. One (1) trip of one (1) working day two (2) months before the warranty expiration to identify any issues to be corrected under warranty.

E. Any additional time required to achieve successful installation and operation shall be at the expense of the Electrical Subcontractor.

3.05 FIELD ADJUSTMENTS

A. The circuit breaker trip units shall be set in the field by a qualified representative of the manufacturer, or an outside testing company retained by the Electrical Subcontractor, in accordance with the settings designated in the coordination study. See Section 26 05 00 – Basic Electrical Requirements.

END OF SECTION

ATTACHMENT AI – 26 24 16 PANELBOARDS

DIVISION 26

ELECTRICAL

(FILED SUB BID REQUIRED)

SECTION 26 24 16

PANELBOARDS[1]

PART 1 – GENERAL

1.01 FILED SUB-BID REQUIREMENTS

A. This Section is part of the filed sub-bid for Division 26 – Electrical. See Section 26 05 00.

1.02 THE REQUIREMENT

A. The **ELECTRICAL SUBCONTRACTOR** shall furnish and install panelboards of voltage and current ratings as specified herein and indicated on the Drawings. Panelboards shall be furnished with circuit breaker ratings, number of breakers, number of poles and locations conforming to the panelboard schedules on the Drawings.

B. Reference Section 26 05 00 – Basic Electrical Requirements; Section 26 05 53 – Identification for Electrical Systems; and Section 26 43 13 – Surge Protective Devices

1.03 CODES AND STANDARDS

A. Panelboards shall be designed, manufactured, and/or listed to the following standards as applicable:

1. Underwriters Laboratories

    a. UL 50 – Enclosures for Electrical Equipment, Non-environmental Considerations

    b. UL 67 – Standard for Panelboards

    c. UL 489 – Molded Case Circuit Breakers, Molded Case Switches, and Circuit Breaker Enclosures

    d. UL 943 – Ground Fault Circuit Interrupters

2. NEMA PB1 – Panelboards

---

1 Addendum No. 5

3. National Electrical Contractors Association (NECA) Standard 407 – Standard for Installing and Maintaining Panelboards

1.04 SUBMITTALS

A. In accordance with the procedures and requirements set forth in the General Conditions and Section 01 33 00 – Submittal Procedures, the **ELECTRICAL SUBCONTRACTOR** shall obtain from the equipment manufacturer and submit the following:

1. Shop Drawings.

2. Spare Parts List.

3. Operation and Maintenance Manuals.

4. Reports of Field Tests.

B. Each submittal shall be identified by the applicable Specification Section.

1.05 SHOP DRAWINGS

A. Each submittal shall be complete in all respects, incorporating all information and data listed herein and all additional information required for evaluation of the proposed equipment's compliance with the Contract Documents.

B. Partial, incomplete, or illegible submittals will be returned to the **ELECTRICAL SUBCONTRACTOR** without review for resubmittal.

C. Shop drawings shall include but not be limited to:

1. Product data sheets.

2. Complete assembly, layout, and installation drawings with clearly marked dimensions for each panelboard.

3. Complete panelboard schedules indicating circuit designations as shown on the Drawings for each panelboard.

4. The submittal information shall reflect the specific equipment identification number as indicated on the Drawings (e.g., LP-CHEM-1, PP-1-MCC-1, etc.).

1.06 OPERATIONS AND MAINTENANCE MANUALS

A. The **ELECTRICAL SUBCONTRACTOR** shall submit operation and maintenance manuals in accordance with the procedures and requirements set forth in the General Conditions and Division 01. The manuals shall include: 100820

1. Instruction books and/or leaflets.

2. Recommended spare parts list.

3. Final as-built construction drawings included in the shop drawings incorporating all changes made in the manufacturing process and during field installation.

1.07 SPARE PARTS

A. For each panelboard, the **ELECTRICAL SUBCONTRACTOR** shall furnish to the Owner all spare parts as recommended by the equipment manufacturer. All spaces in the panelboards shall be furnished with a spare breaker as indicated in the panelboard schedules shown on the Drawings.

B. Spare parts lists shall indicate specific sizes, quantities, and part numbers of the items to be furnished. Terms such as "1 lot of packing material" are not acceptable.

C. Parts shall be completely identified with a numerical system to facilitate parts inventory control and stocking. Each part shall be properly identified by a separate number. Those parts which are identical for more than one size shall have the same parts number.

1.08 IDENTIFICATION

A. Each panelboard shall be identified with the identification name/number indicated on the Drawings. A nameplate shall be securely affixed in a conspicuous place on each panelboard. Nameplates shall be as specified in Section 26 05 53 – Identification for Electrical Systems.

PART 2 – PRODUCTS

2.01 MANUFACTURERS

A. The Equipment shall be designed, constructed and installed in accordance with the best practices of the trade, and shall operate satisfactorily when installed as shown on the Drawings.

B. It is the intent of these specifications that the panelboards be produced by a single manufacturer who shall be responsible for matching all components and providing equipment which functions together as a system.

C. Distribution panelboards, those identified with a prefix “DP” on the Drawings, shall be the PRL4 Series by Eaton, I-Line Series by Square D, GE by ABB equivalent, or Siemens Energy and Automation, Inc. equivalent.

D. Power panelboards, those identified with prefix “PP” on the Drawings, shall be the PRL3a Series by Eaton, NF Series by Square D, GE by ABB equivalent, or Siemens Energy and Automation, Inc. equivalent.

E. Lighting and instrument panelboards, those identified with prefix “LP” and “IP” respectively on the Drawings, shall be the PRL1a or PRL2a Series by Eaton, NQ Series by Square D, GE by ABB equivalent, or Siemens Energy and Automation, Inc. equivalent.

F. Combination power units shall be Mini-Power Center Series by Eaton, Mini-Power Zone Series by Square D, GE by ABB equivalent, or Siemens Energy and Automation, Inc. equivalent.

2.02 PANELBOARDS

A. General

1. Panelboards shall be dead-front type with automatic trip-free, non-adjustable, thermal-overload, branch circuit breakers. Panelboards shall be of the configuration and rating as specified herein and indicated on the Drawings. Panelboards shall be UL 67 Listed and shall be constructed to NEMA PB1 standards. Panelboards shall be service entrance rated where indicated on the Drawings.

2. Panelboards shall be equipped with a main breaker or main lugs complete with branch circuit breakers, as indicated on the Drawings. The panelboards shall be suitable for flush or surface mounting.

3. Panelboards shall be fully rated and shall have a minimum short circuit rating of 22,000 amperes symmetrical for units rated 240VAC and below, and 65,000 amperes symmetrical for units rated above 240VAC, unless otherwise indicated on the Drawings.

4. Panelboards shall be Eaton Pow-R-Line Series, the Square D Company equivalent, the ABB equivalent, or Siemens Energy and Automation, Inc. equivalent.

B. Enclosures

1. Enclosures shall be UL 50 listed and have a NEMA rating as indicated on the Drawings. An Underwriter's Laboratories, Inc. inspection label shall appear on the interior of the cabinet. Enclosures designated as NEMA 4X shall be constructed of 304 stainless steel. Enclosures with all other NEMA ratings shall be constructed of No. 12 U.S.S. code gauge galvanized steel, painted ANSI #61 light gray. The enclosure shall have wiring gutters on sides and shall be at least 5-3/4 inches deep.

2. Lighting and instrument panelboards and power panelboards shall be provided with door-in-door trim. The trim shall have a full height piano hinge where it is attached to the panelboard box. Trim shall be attached to the panelboard can using concealed trim clamps. The door to access the deadfront shall be fastened

to the trim with concealed hinges and shall be equipped with flush-type catches and locks. Resultant trim shall allow work inside the panelboard enclosure without the need to remove the panel trim. Enclosure doors exceeding 40 inches in height shall be equipped with a vertical bolt three-point locking mechanism. All locks shall be keyed alike.

3. Distribution panelboards shall be dead front type with vertical wiring troughs large enough to allow compliance with NEC bending radius of cables being terminated on the overcurrent protective devices in the panel. Vertical wiring troughs shall be provided with hinged covers to allow access to the panel interior and feeder terminations.

4. The panelboard shall be provided with an information label. The information label shall include the panelboard designation, voltage, phase, wires, and bus rating.

C. Bus Work

1. Main bus bars shall be of ample size so that a current density of not more than 1000 amperes per square inch of cross section will be attained. This current density shall be based on the application of the full load connected to the panel plus approximately 25% of the full load for spare capacity. The main bus shall be full capacity as based on the preceding for the entire length of the panel so as to provide full flexibility of circuit arrangement. Bus shall be sized in accordance with UL standards to limit the temperature rise on any current carrying part to a maximum of 50 degrees C above a maximum ambient temperature of 40 degrees C.

2. Solid neutral bus bars are required, and neutral bus ampacity shall be the same as the main bus bars unless otherwise noted. Ratings shall be in accordance with applicable standards.

3. A separate ground bus shall be provided with lugs for termination of equipment grounding conductors.

4. Branch bus work shall be rated to match the maximum branch circuit breaker which may be installed in the standard space.

5. All bus shall be tin-plated copper and shall extend the entire useable length of the panelboard, including spaces.

D. Circuit Breakers

1. Circuit breakers shall be bolt-on, molded-case type and UL 489 Listed with trip ratings as indicated on the Drawings. Unless otherwise indicated, circuit breakers shall be manually operable, with automatic trip-free operation, and shall provide inverse-time overload and instantaneous short-circuit protection. All circuit breakers shall have quick-make, quick-break, toggle mechanism for manual as

well as automatic operation. Tandem or half-size circuit breakers are not acceptable.

2. Where indicated on the Drawings, or where required by Code, circuit breakers shall be equipped with integrally mounted ground fault interrupters complete with "TEST" push button and shall be of a type which fit standard panelboard spaces for the breaker continuous current rating required. Ground fault circuit interrupter style circuit breakers shall be UL 943 Listed. Circuit breakers used for lighting circuit switching shall be approved for the purpose and shall be marked "SWD". Where required by Article 440 of the MEC, circuit breakers installed for air conditioning units shall be HACR type.

3. Circuit breaker voltage ratings shall meet or exceed the panelboard voltage indicated on the Drawings. The number of poles and trip ratings shall be as indicated on the Drawings. Where a trip rating is not indicated on the Drawings, provide a 20A circuit breaker.

4. Circuit breakers for panelboards rated 240VAC and below shall have an interrupting rating at 240 VAC that matches the panelboard short circuit rating. Circuit breakers for panelboards rated above 240VAC shall have an interrupting rating at 480 VAC that matches the panelboard short circuit rating.

5. Tandem or half-size circuit breakers are not acceptable.

6. Main circuit breakers shall be individually mounted. Branch mounted circuit breakers are not acceptable unless specifically indicated on the Drawings. Coordinate top or bottom mounting of main circuit breaker with incoming conduit location.

7. Where indicated on the Drawings, branch circuit breakers shall be provided with a padlockable hasp or handle padlock attachment for padlocking in the off position as required to meet the MEC requirement for disconnecting means and/or OSHA lock-out/tagout standard. Locking hardware shall remain in place even when the padlock is removed. Branch circuit breakers shall be provided with a similar lockon device where indicated on the Drawings.

E. Directories

1. Approved directories with noncombustible plastic cover, and with typewritten designations of each branch circuit, shall be furnished and installed in each panelboard. The **ELECTRICAL SUBCONTRACTOR** shall maintain in each panel, during the duration of the Contract, a handwritten directory clearly indicating the circuit breakers in service. This directory shall be updated as work progresses, and final, typewritten directories, as specified above, shall be installed at the end of the project. Designations and circuit locations shall conform to the panelboard schedules on the Drawings, except as otherwise authorized by the Engineer.

2.03 SURGE PROTECTIVE DEVICES

A. Surge protective devices (SPD) shall be provided as a separate unit external to the panelboard enclosure, as indicated on the Drawings. See Section 26 43 13 – Surge Protective Devices for SPD requirements.

PART 3 – EXECUTION

3.01 INSTALLATION

A. Panelboards shall be furnished and installed as shown on the Drawings and as recommended by the equipment manufacturer, and as required by NECA 407.

B. Panelboards shall be set true and plumb in locations as shown on the Drawings. The top of panelboard enclosure shall not exceed six (6) feet above finished floor elevation.

C. Enclosures shall not be fastened to concrete or masonry surfaces with wooden plugs. Appropriate cadmium plated or galvanized steel bolts shall be used with expansion shields or other metallic type concrete insert for mounting on concrete or solid masonry walls. Cadmium plated or galvanized steel toggle bolts shall be used for mounting on concrete block or other hollow masonry walls. Bolt diameter shall be as required considering the size and weight of the completed panelboard and enclosure to provide adequate structural support.

D. The **ELECTRICAL SUBCONTRACTOR** shall not use factory furnished knockouts with surface mounted back boxes. The **ELECTRICAL SUBCONTRACTOR** shall punch or drill required openings during installation and shall equip flush mounted back boxes with manufacturer's standard pattern of knockouts.

E. The **ELECTRICAL SUBCONTRACTOR** shall install cabinets (and other enclosure products) in plumb with the building construction. Flush mounted enclosures shall be installed so that the trim will rest against the surrounding surface material and around the entire perimeter of the enclosure.

F. Bus loads in all panelboards shall be balanced between phases to within a tolerance of one (1) KVA. Convenience receptacles shall be distributed evenly among all phase buses as much as practical.

G. Prior to final completion of the work, all metal surfaces of the equipment shall be cleaned thoroughly, and all scratches and abrasions shall be retouched with the same lacquer as used for shop finishing coats.

3.02 TESTING

A. All tests shall be performed in accordance with the requirements of the General Conditions and Division 01. The following tests are required:

1. Field Tests

   a. Prior to termination of any conductors to the circuit breakers, all bus work and circuit breakers shall be tested from phase to phase and phase to ground with a 1000 VDC megohmmeter for 1 minute in accordance with NECA 407. Resistance values shall be recorded and shall not be less than 100 megohms.

   b. Prior to terminating any wires to the circuit breakers, the resistance of the connection between the bus work and each circuit breaker shall be tested through the use of a low-resistance ohmmeter. Record the resistance values for each circuit breaker.

END OF SECTION

ATTACHMENT AJ – 26 24 19 LOW VOLTAGE MOTOR CONTROL CENTERS

DIVISION 26

ELECTRICAL

(FILED SUB BID REQUIRED)

SECTION 26 24 19
LOW VOLTAGE MOTOR CONTROL CENTERS[1]

PART 1 – GENERAL

1.01 FILED SUB-BID REQUIREMENTS

A. This Section is part of the filed sub-bid for Division 26 – Electrical. See Section 26 05 00.

1.02 THE REQUIREMENT

A. The **ELECTRICAL SUBCONTRACTOR** shall furnish, install, test, and place in satisfactory operation, the motor control centers as specified herein and indicated on the Drawings.

B. The **ELECTRICAL SUBCONTRACTOR** shall obtain the motor control centers from one manufacturer who shall also manufacture the enclosure and major equipment components, which includes, but is not limited to, combination starters, variable frequency drives, reduced voltage solid state starters, circuit breakers, power monitoring equipment, and other components of the equipment assembly. Subcontracting of wiring is not acceptable.

C. The motor control center shall be assembled using NEMA rated components. Components designed and built to International Electrotechnical Commission (IEC) standards are not recognized. Equipment designed, manufactured and labeled in compliance with IEC standards is not acceptable.

D. Related sections:

1. Section 26 05 00 – Basic Electrical Requirements;
2. Section 26 05 53 – Identification for Electrical Systems
3. Section 26 43 13 – Surge Protective Devices
4. Section 26 09 16 – Electric Controls and Relays.

---

1 Addendum No. 5

1.03 CODES AND STANDARDS

A. The assemblies shall meet or exceed the requirements within the following standards for motor control centers:

1. NEMA ICS-18

2. UL845

B. The motor control center shall be designed, manufactured, and tested in facilities registered to the following quality standards:

1. ISO 9001

1.04 SUBMITTALS

A. In accordance with the procedures and requirements set forth in the General Conditions and Section 01 33 00 – Submittal Procedures, the **ELECTRICAL SUBCONTRACTOR** shall obtain from the equipment manufacturer and submit the following:

1. Shop Drawings.

2. Spare Parts List.

3. Proposed Testing Methods and Reports of Certified Shop and Field Tests.

4. Manufacturers Startup Certification

5. Operation and Maintenance Manuals.

B. Each submittal shall be identified by the applicable Specification Section.

1.05 SHOP DRAWINGS

A. Each submittal shall be complete in all respects, incorporating all information and data listed herein and all additional information required for evaluation of the proposed equipment's compliance with the Contract Documents.

B. Partial, incomplete or illegible submittals will be returned to the **ELECTRICAL SUBCONTRACTOR** without review for resubmittal.

C. Shop drawings for each motor control center shall include but not be limited to:

1. A Compliance, Deviations, and Exceptions (CD&E) letter. If the shop drawings are submitted without this CD&E letter, the submittal will be rejected. The letter shall include all comments, deviations and exceptions taken to the Drawings and Specifications by the **ELECTRICAL SUBCONTRACTOR** AND Equipment Manufacturer/Supplier. This letter shall include a copy of this Specification Section.

121919

In the left margin beside each and every paragraph/item, a letter "C", "D", or "E" shall be typed or written in. The letter "C" shall be for full compliance with the requirement. The letter "D" shall be for a deviation from the requirement. The letter "E" shall be for taking exception to a requirement. Any requirements with the letter "D" or "E" beside them shall be provided with a full typewritten explanation of the deviation/exception. Handwritten explanation of the deviations/exceptions is not acceptable. The CD&E letter shall also address deviations, and exceptions taken to each Drawing related to this Specification Section.

2. Product data sheets.

3. Example equipment nameplate data sheet.

4. Approximate total shipping weight of each shipping split.

5. Plan, front, and side view drawings, including overall dimensions of each motor control center. Identify shipping splits and show conduit stub-up area locations on the Drawings.

6. Internal schematic and point-to-point wiring diagrams of each motor control unit including variable frequency drives and reduced voltage solid state starters integrated into the motor control center. Standard wiring diagrams that are not custom created by the manufacturer for the motor control centers for this project are not acceptable. One wiring diagram which is typical for an equipment group (e.g. pump, pumps) is not acceptable. Each wiring diagram shall include wire identification and terminal numbers. Indicate all devices, regardless of their physical location, on the diagrams. Identify on each respective wiring diagram specific equipment names and equipment numbers consistent with those indicated on the Drawings.

7. Complete single-line diagrams for each motor control center showing circuit breakers, motor circuit protectors, motor controllers, instrument transformers, meters, relays, timers, control devices, dry-type transformers, panelboards, and other equipment comprising the complete assembly. Indicate electrical ratings of equipment and devices on these single-line diagrams. Ratings include starter size and type, motor circuit protector continuous current rating, circuit breaker frame size and trip rating, transformer ratings panelboard ratings, motor horsepower and full load current, and similar information.

8. Bill of material list for each motor control center and each motor control unit.

9. Nameplate schedule for each motor control center.

10. Manufacturer's installation instructions.

11. Key interlock scheme drawing and sequence of operations.

12. Manufacturer’s Warranty Statement

13. Table listing all motor loads connected to the motor control center. Table shall include the full load amps of the APPROVED motors. Final approval of MCC shop drawings cannot be given until all motor loads for MCC have been reviewed, approved, and shown in this table.

D. The shop drawing information shall be complete and organized in such a way that the Engineer can determine if the requirements of these Specifications are being met. Copies of technical bulletins, technical data sheets from "soft-cover" catalogs, and similar information which is "highlighted" or somehow identifies the specific equipment items the **ELECTRICAL SUBCONTRACTOR** intends to provide are acceptable and shall be submitted.

E. Prior to completion and final acceptance of the project, the **ELECTRICAL SUBCONTRACTOR** shall furnish and install "as-built" wiring diagrams for each motor control center unit of each motor control center. These final drawings shall be included in the O&M manuals.

1.06 OPERATION AND MAINTENANCE MANUALS

A. The **ELECTRICAL SUBCONTRACTOR** shall submit operation and maintenance manuals in accordance with the procedures and requirements set forth in the General Conditions and Division 01.

1.07 SPARE PARTS

A. All spare parts as recommended by the equipment manufacturer shall be furnished to the Owner by the **ELECTRICAL SUBCONTRACTOR**. In addition to the manufacturer recommended spare parts, the **ELECTRICAL SUBCONTRACTOR** shall furnish the following spare parts for each motor control center:

1. One (1) set of fuses of each size provided

2. One (1) starter coil and complete set of contacts for each size and type of starter provided

3. One (1) relay of each type and size provided

4. One (1) control power transformer of each size provided

5. Two (2) lamps and lenses for indicating lights for each color provided

6. One (1) indicating lamp socket for each type provided

7. One (1) pilot device (e.g. pushbutton, selector switch, etc.) complete with contact blocks and legend plates for each type, size, and rating provided

8. One (1) motor circuit protector for each type, size, and rating provided

9. One (1) circuit breaker for each type, size, and rating provided (except main circuit breakers)

B. The spare parts shall be packed in containers suitable for long term storage, bearing labels clearly designating the contents and the pieces of equipment for which they are intended.

C. Spare parts shall be delivered at the same time as the equipment to which they pertain. The **ELECTRICAL SUBCONTRACTOR** shall properly store and safeguard such spare parts until completion of the work, at which time they shall be delivered to the Owner.

D. Spare parts lists, included with the shop drawing submittal, shall indicate specific sizes, quantities, and part numbers of the items to be furnished. Term such as "1 lot of packing material" are not acceptable.

E. Parts shall be completely identified with a numerical system to facilitate parts control and stocking. Each part shall be properly identified by a separate number. Those parts which are identical for more than one size, shall have the same parts number.

1.08 IDENTIFICATION

A. Each motor control center shall be identified with the identification number indicated on the Drawings (e.g., MCC-BB, MCC-PTF, MCC-PEP, etc.). A nameplate shall be securely affixed in a conspicuous place on each motor control center. Nameplates shall be as specified in Section 26 05 53 – Identification for Electrical Systems.

PART 2 – PRODUCTS

2.01 MANUFACTURERS

A. The equipment covered by this Specification is intended to be standard equipment of proven performance as manufactured by reputable concerns. Equipment shall be designed, constructed and installed in accordance with the best practices of the trade, and shall operate satisfactorily when installed as shown on the Drawings.

B. It is the intent of these specifications that all components of the motor control center be provided by one manufacturer who shall have the sole responsibility of matching all components and providing equipment which functions together as a system. The manufacturer of the motor control center shall also be the manufacturer of the motor controllers. The use of third-party supply and assembly of these components is not acceptable.

C. Motor control centers shall be Freedom 2100 as manufactured by Eaton using NEMA rated Freedom Series contactors and starters, Model 6 as manufactured by the Square D Company, or the ABB Reliagear MCC or approved equal.

2.02 MOTOR CONTROL CENTER

A. General

1. The motor control centers shall be 600 VAC class suitable for operation on a three-phase, 60 Hz system. The motor control centers and their components shall conform to the requirements of applicable standards of NEMA Part ICS 2-322 and Underwriters' Laboratories, Inc. UL-845. Wiring shall be NEMA Class II, Type B. Each vertical section shall be a NEMA 1A (gasketed) industrial use enclosure unless otherwise specified or indicated on the Drawings.

2. The enclosures shall be cleaned, primed, and finish coated in accordance with the manufacturer's standard process. The pre-treatment process shall be a zinc chromate primer followed by a "One Coat" paint process that is monitored to meet the manufacturer's specifications for paint color, texture, thickness, and durability. Enclosure interior and exterior finish color shall be ANSI 49 or ANSI 61 (medium light gray). The color of the back panel/bucket located within the MCC enclosure shall be white.

3. The motor control centers shall be capable of withstanding the fault current available at its line terminals. Minimum bus bracing, withstand, and interrupting ratings are specified herein.

4. Unless otherwise specified or indicated on the Drawings, each vertical section shall be approximately 20 inches wide, and 90 inches high, 20 inches deep, and shall not contain more than six NEMA Size 1 starters. Motor control centers shown "back-to-back" on the Contract Drawings shall be complete motor control assemblies placed back-to-back in the location shown. Motor control center sections with common horizontal and/or vertical bus systems are unacceptable.

5. Continuous horizontal wiring troughs shall be provided at both the top and bottom of each section. These troughs shall line up to form a continuous wireway for the full length of the motor control center. Each section shall be provided with a large, continuous, full height vertical wiring trough in the right side of each section. Each vertical wiring trough shall be furnished complete with tie bars for conductor support.

6. All control wiring shall be No. 14 AWG (minimum) labeled at each end in accordance with the wiring numbers shown on the accepted shop drawings. Power wiring shall be sized to suit the maximum horsepower rating of unit; No. 12 AWG (minimum). Wiring shall be type MTW rated for 105°C. Wire color coding shall be red for control and black for power. Wire numbers shall not be repeated in a motor control center.

7. Starter units shall contain the number of auxiliary contacts, unit-mounted pilot devices and indicating lights, control relays, elapsed time meters, and other devices as shown on the Drawings and required for the applications. A minimum of two (2) normally open (NO) and two (2) normally closed (NC) spare contacts shall be provided for each magnetic starter. These spare contacts shall be shown on the submittal wiring diagrams.

8. The motor control centers shall be furnished with warning signs to notify maintenance personnel of multiple sources of power within the motor control units.

B. Incoming Power

1. The motor control centers shall be supplied from a 480V, 3-phase, 3 wire as indicated on the Drawings, 60 Hz power source. The incoming power feeders shall be sized as shown on the Drawings. All terminals for incoming and outgoing power cables shall be provided with compression lugs.

C. Bus

1. Power shall be distributed by means of a continuous, tin plated copper horizontal bus, rated as shown on the Drawings. The bus shall be braced for 65,000A rms symmetrical at 480V unless otherwise indicated on the Drawings. The horizontal bus shall be effectively isolated from all wiring troughs and other working areas. Vertical bus extensions shall be tin plated copper, isolated by rigid, glass-polyester moldings so as to be a separate self-supported assembly. Silver plated vertical bus may be provided if specifically accepted by the Engineer. Full height vertical bus shall be installed in all sections including those containing spare units and "prepared" spaces. No extra safety jacks or similar devices shall be required to obtain an essentially dead-front condition. Access shall be provided for inspection and maintenance from the front. Minimum horizontal bus rating shall be 600A. Minimum vertical bus rating shall be 300A.

D. Incoming Line Units

1. Each incoming line unit shall contain buswork and fittings as required with cable lugs for cables of sizes and quantities shown on the Drawings. Cable lugs shall be suitable for their respective conductors.

E. The Unit Compartments

1. Each unit compartment shall be provided with an individual front door hinged to the vertical structure. Each plug-in unit shall be supported and guided by a removable unit support pan, so that the unit rearrangement is easily accomplished. The rearrangement of the unit support pan from one location to the other shall be accomplished without use of tools. After insertion, each plug-in unit shall be held in place by at least one multi-turn latch, located at the front of the unit. The latch shall be located for front accessibility and installation convenience. An additional

mechanical interlock shall be provided to prevent withdrawal of the unit from the stationary structure with the operating mechanism in the ON position.

2. The unit plug in power stabs shall be electromagnetically tin-plated copper to yield a low resistance connection and designed to tighten during heavy current surges and short circuits. The stab shall be backed by spring steel clips to provide and maintain a high pressure, two-point connection to the vertical bus. They shall be free floating and self-loading plug-in. Wiring from the unit disconnecting means to the plug-in stab shall be exposed at the rear of the unit. The power cable terminations at the plug-in stab shall be mounted in a two-piece, glass polyester support assembly. This support assembly shall provide a separate isolated pathway for each phase, minimizing the probability of a unit fault condition reaching the power bus system.

3. NEMA Size 1 through Size 5 non-reversing starters shall be plug-in units. Size 1, 2, and 3 shall utilize stab assembly rated 100A. Stab assemblies for Size 4 and Size 5 starters shall be rated for the starters maximum output current rating.

4. An industrial, heavy-duty flange handle mechanism shall be supplied for the control of each disconnecting means. This mechanism shall be engaged with the disconnect device at all times as an integral part of the unit regardless of the unit door position. The operator handles shall have an up-down motion with the down position as off. The ON-OFF condition of the disconnecting means shall be permanently marked on the handle operator. It shall be possible to lock the handle in the "OFF" position with up to three (3) 3/8-inch diameter shackle padlocks and in the "ON" position with one (1) 3/8 inch diameter shackle padlock.

5. The operator handle of all units shall be interlocked with the door units so that the disconnect means cannot be switched unless the door unit is closed. A means shall be provided for purposely defeating the interlock during maintenance or testing. This interlock shall also prevent opening the unit door unless the disconnecting means is in the off position. An externally operated defeater requiring the use of a screwdriver shall provide access to the unit without interrupting service.

6. The overload relays shall be resettable from the outside of the enclosure by means of an insulated bar or button.

F. Ground Bus

1. The horizontal ground bus shall be tin plated copper and located in the bottom horizontal wireway. The minimum size of the horizontal ground bus shall be ¼-inch x 1 inch (6.35mm x 25.4mm) or 33% of the phase bus ampacity, whichever is greater.

2. Compression lugs shall be mounted on the ground bus in each section, in the size and quantity as required for the termination of system and equipment grounding conductors.

3. The vertical ground bus shall be tin plated copper and solidly connected to the horizontal ground bus. This ground bus, in combination with the unit ground bus stab, establishes unit grounding before the plug-in power stabs engage the power bus, and conversely, as the unit is withdrawn, grounding is maintained until after the plug-in power stabs are disengaged.

4. The vertical load ground bus shall be tin plated copper and solidly connected to the horizontal ground bus. The vertical load ground bus assembly, comprised of the vertical load ground bus and the unit load ground bus connector, shall provide a termination point for the load equipment grounding conductor at the unit. This fixed connection shall not have to be removed when the unit is withdrawn from the motor control center.

G. Isolation and Insulation

1. Horizontal bus access covers and vertical bus covers shall isolate the energized buses to guard against the hazard of accidental contact. These covers shall be molded of a glass polyester material.

2. The horizontal bus shall be isolated from the top horizontal wireway by a grounded steel barrier. This barrier shall be removable to allow access to the bus and connections for maintenance.

3. The vertical bus cover shall provide unit plug-in openings which shall permit unit plug-in stab assemblies to pass through and engage the vertical bus. The unit plug-in openings shall be sized to minimize the probability of inadvertent contact with the vertical bus.

4. Isolation of unused stab openings shall be accomplished by use of a manual shutter to close off the stab opening. These shutters shall be attached to the structure so that when they are removed (to allow a stab connection) they are retained in the structure and are readily accessible for use should a plug-in unit be removed from the motor control center.

5. All units shall be isolated from one another, above and below, by unit support pans or steel barriers, which can remain in place when the units are withdrawn.

6. Incoming line compartments shall be isolated from horizontal and vertical wireways by steel barriers.

7. A molded unit isolating barrier shall be provided to isolate the unit from the vertical wireway.

H. Combination Motor Control Units

1. Motor branch circuits shall be protected by a motor circuit protector (MCP).

2. The motor circuit protector shall be operated by a toggle type handle and shall have a quick make, quick break overcenter switching mechanism that is mechanically trip free from the handle, so that the contacts cannot be held closed against short circuits and abnormal currents. Tripping shall be clearly indicated by the handle automatically assuming a position midway between the manual ON and OFF positions. All latch surfaces shall be ground and polished. All poles shall be so constructed that they open, close, and trip simultaneously.

3. Each pole of these motor circuit protectors shall provide instantaneous short circuit protection by means of an adjustable magnetic only element.

4. The motor circuit protectors in combination with a contactor and overload relay shall have an interrupting rating that matches the motor control center short circuit rating at 480V.

5. Motor circuit protector's ratings, modifications, etc., shall be as specified herein and as indicated on the Drawings.

6. Motor circuit protectors shall be completely enclosed molded case devices with a current sensing coil in each of the 3 poles and have a magnetic trip adjustment located on the front. The motor circuit protector shall be manually operable. The protector shall be designed to meet the MEC requirement concerning motor full load and locked-rotor current. Ampere ratings shall be clearly visible. Contacts shall be of non-welding silver alloy. Arc extinction must be accomplished by means of arc chutes, consisting of metal grids mounted in an insulating support.

I. Motor Starters

1. Motor starters shall conform to NEMA Standard ICS1 and shall be for across-the-line starting, unless otherwise indicated. IEC rated equipment is not acceptable and shall be used as a basis for rejection of the equipment. The size of the starter shall be as required for the particular load. Minimum starter size shall be NEMA Size 1. Size 1 and 2 starters shall be completely drawout type, so that units may be withdrawn without disconnecting any wiring. Size 3 and 4 full-voltage, non-reversing starters shall be drawout type after disconnecting power leads only. Starters over three-space units high may be bolt-on type. A positive guidance system shall be provided to assure proper alignment of wedge-shaped power stabs in deadfront openings in vertical power bus.

2. A suitable control disconnect device(s) to comply with the requirements of the MEC shall be provided.

3. Magnetic starters and contactors shall be electromagnetic vertical or horizontal lift design with double break cadmium oxide silver contacts. Design shall meet or exceed the requirements of UL and NEMA Standards. Coils shall be hot molded construction to protect the coils from mechanical and environmental damage.

4. Each starter shall be able to accommodate a minimum of three (3) auxiliary contacts in addition to the hold-in contact.

5. Each starter shall be supplied with a 3-pole, manual reset overload relay. The relays shall be solid state type, with at least one isolated normally open and one isolated normally closed auxiliary contact that operates when a trip condition has occurred. Relays shall be self-powered, have a visible trip indicator, have a trip test function, and have selectable Class 10 or 20 operation. Overload relays shall be set for Class 10 operation unless otherwise directed by the Engineer. Overload relay shall have phase loss protection built in to trip the unit and protect the motor against single phasing. The **ELECTRICAL SUBCONTRACTOR** shall provide the overload relay model with the correct current range for each application. Overload relay shall have adjustable current range dial. Eutectic alloy or bi-metallic type overload relays are not acceptable.

6. If required, each starter shall be supplied with a three-pole, manual test and reset overload relay. The relay shall be an E3+ solid state overload relay as manufactured by Allen-Bradley. The relay shall meet the requirements specified in this Section.

7. Each motor starter coil shall be equipped with a surge-suppression device for protection of the solid-state equipment (e.g. programmable logic controller) wired as part of the control circuit.

8. The **ELECTRICAL SUBCONTRACTOR** and motor control center manufacturer is advised to review the Contract Documents for additional requirements for space heaters, power factor correction capacitors, and similar equipment which may not be specified in this Division or shown on the Drawings. Control power transformers shall be fused on both the primary and secondary sides. The minimum control power transformer VA requirements are shown below. Control power transformers shall be sized as required for the connected loads, plus 25% spare capacity.

    a. Size 1-75 VA

    b. Size 2-75 VA

    c. Size 3-200 VA

    d. Size 4-300 VA

    e. Size 5-500 VA

9. Reduced voltage solid state starters shall be provided for the motor loads as specified herein and as indicated on the Drawings.

10. Modules shall be furnished and installed as specified herein and indicated on the Drawings. These modules shall be supplied with four (4) input points and two (2) output points. The output points shall provide direct control of motor starter coils up to NEMA Size 5. The output points shall also provide direct control of other electrical devices within the electrical ratings limits of the module.

J. Circuit Breakers

1. Where specified herein, indicated on the Drawings, or required, the main circuit breaker shall be rated for service entrance and bear a service entrance label.

2. Unless otherwise indicated, circuit breakers shall be manually operable and shall provide thermal-magnetic, inverse-time-limit overload, and instantaneous short-circuit protection.

3. Circuit breakers shall be molded case type, rated 480 VAC, 2 or 3 pole and have 100 ampere or larger frames. The interrupting rating shall match that of the motor control center short circuit rating at 480V.

4. Overload protection shall be provided on all poles with trip settings as indicated on the Drawings. Breakers of 225-ampere frames and larger shall have interchangeable trip units and adjustable magnetic trip elements.

5. Horizontally mounted operator handles for feeder circuit breaker units up to 225A are permissible if accepted in writing by the Engineer.

6. Where indicated on the Drawings, shunt trip devices shall be provided to trip a circuit from a remote location by means of a trip coil energized from a separate circuit. A 120V shunt trip shall be capable of operating 55% or more of rated voltage. All other shunt trips shall be capable of operating at 75% or more of rated voltage.

K. Terminal Blocks

1. Terminal blocks associated with removable units within the motor control center shall be provided as follows:

a. Terminal blocks shall be mounted within the unit insert and in the front for ease of accessibility.

b. Pull-apart style terminal block assemblies shall be provided. Terminal block assembly shall consist of a male and female component held together with captive screws or positive retention clips. The terminal block assembly shall be designed to withstand the effects of vibration, yet able to be pulled apart

without difficulty. The terminals of the assembly shall be recessed to isolate them from accidental contact. Terminal markings shall be provided for the purpose of identifying terminations. Terminal strips shall be suitable for use as a disconnecting means of foreign interlock voltages.

c. For starters Size 2 and smaller, terminate all starter wiring (power and control) and external field wiring on terminal blocks provided in each unit.

d. For starters Size 3 and larger, terminate control wiring and external field control wiring on terminal blocks provided in each unit.

2. Terminal blocks associated with non-removable units within the motor control center shall be provided in accordance with Section 26 09 16 – Electric Controls and Relays.

3. Provide a minimum of four (4) spare terminals in each terminal block assembly.

L. Control Devices

1. Furnish and install NEMA rated control devices as required and/or shown on the Drawings. The following control devices shall be provided as specified in Section 26 09 16 – Electric Controls and Relays:

a. 30.5mm Pilot devices (switches, indicating lights, etc.)

b. 11-pin octal base pin and sleeve type relays and timers

M. Nameplates

1. Provide engraved plastic nameplates to identify the motor control center, each unit compartment, door mounted devices, and internal components.

2. Nameplates shall be as specified in Section 26 05 53 – Identification for Electrical Systems. Equipment names and numbers as indicated on the single line diagrams shall be used as the basis to engrave the nameplates.

3. Provide a master nameplate giving motor control center designation, voltage rating, ampere rating, short circuit rating, manufacturer's name, general order number and item number.

4. Control components mounted as part of the assembly, such as fuse blocks, control relays, pushbuttons, switches, and similar devices, shall be suitably marked for identification corresponding to appropriate designations on the manufacturer's wiring diagrams.

N. Future Space Requirements

1. Provide spaces for future combination starter and other units in the motor control centers. Furnish spaces with hardware to accommodate future plug-in control unit without modification of vertical sections. Provide the number of spaces required for future units as indicated on the Drawings, minimum.

2. Provide additional vertical sections to ensure total number of spaces as indicated on the Drawings. The number of vertical sections is contingent upon specific manufacturer's final proposed and Engineer-accepted configuration of motor control center units.

O. Motor Control Center Additions

1. The **ELECTRICAL SUBCONTRACTOR** shall furnish and install complete motor control center sections or individual motor control center units to be added to existing motor control centers in accordance with these Specifications and as indicated on the Drawings.

2. These additions shall be of the same manufacturer, type, rating, and color as the existing motor control centers. Furnish and install all hardware necessary to connect the buses of the new and existing motor control centers, including ground buses. Enclosures shall match existing.

P. Metering

1. Each motor control center assembly shall be furnished and installed with an Eaton PXM-1300 power quality meter and graphic display module or Allen-Bradley equivalent PowerMonitor 5000 with display module as indicated on the Drawings. A communication expansion card to support Ethernet communication to the plant control system and a 1GB memory card shall be provided with each meter.

Q. Phase Failure Relay

1. A phase failure relay shall be furnished and installed to monitor the main horizontal bus of the motor control center. The phase failure relay shall be Model 8430-MPD as manufactured by Square D Company, Eaton equivalent, or equal.

R. Surge Protective Devices

1. Surge protective devices (SPD) shall be provided either integral to the MCC enclosure or as a separate unit external to the MCC enclosure, as indicated on the Drawings. See Section 26 43 13 – Surge Protective Devices for SPD requirements.

PART 3 – EXECUTION

3.01 INSTALLATION

A. The motor control centers shall be installed as shown on the Drawings and in accordance with the manufacturer's installation instructions.

B. Install motor control centers to allow complete unit door swing required for unit removal. This is specifically required where a vertical section of motor control center is set next to a wall to the left of the motor control center section.

C. Where motor control center structures are located away from walls to allow bottom conduit entry, the **ELECTRICAL SUBCONTRACTOR** shall furnish and install sheet metal coverings for openings along the sides and top of the motor control center line-up. The purpose of the coverings is to minimize dust, dirt, and undesirable materials from collecting behind the equipment. The sheet metal coverings shall be of the same material, gauge, and finish as the motor control center.

D. Motor control centers shall be furnished with anchor bolts as required for aligning and mounting. Floor channels with end covers shall be of type recommended by the manufacturer and shall be furnished for installation in a concrete pad.

E. All field wiring that is terminated directly to a unit within the motor control center shall be neatly routed in a manner that does not hinder the ability to service, adjust, or replace components within that unit. Field wiring shall be properly anchored to the motor control center and individual unit structures.

F. Prior to final completion of the work, all metal surfaces of the equipment shall be cleaned thoroughly, and all scratches and abrasions shall be retouched with the same lacquer as used for shop finishing coats.

3.02 TESTING

A. All tests shall be performed in accordance with the requirements of the General Conditions and Division 01. The following tests are required:

1. Witnessed Shop Tests

    a. None required.

2. Certified Shop Tests and Reports

    a. Submit description of proposed testing methods, procedures, and apparatus. Submit notarized and certified copies of all test reports.

b. As a minimum, the entire motor control center shall go through a quality inspection before shipment. This inspection shall include, but is not limited to, the following:

1) Physical inspection of the structure and the electrical conductors including bussing, general wiring, and units.

2) General electrical tests including power circuit phasing, control circuit wiring, instrument transformers, meters, ground fault system, and device electrical operation.

3) AC dielectric tests of the power circuits and control circuits.

4) Markings/labels, including instructional type, Underwriters Laboratory (UL), and inspector's stamps.

3. The manufacturer shall use integral quality control checks throughout the manufacturing process to maintain the correctness of the motor control center.

B. Field Tests

1. Field tests shall be performed in accordance with the requirements specified in the General Conditions, Division 01, and NETA Acceptance Testing Specifications, latest edition.

3.03 FIELD ADJUSTMENTS

A. All adjustable settings of circuit breakers shall be set in the field by a qualified representative of the manufacturer, or an outside testing company retained by the **ELECTRICAL SUBCONTRACTOR**, in accordance with the settings designated in the coordination study. See Section 26 05 00 – Basic Electrical Requirements.

B. The settings of the motor circuit protectors and overload relays shall be set based on the coordination study and the motor nameplate data of the motors installed.

3.04 SERVICES OF MANUFACTURER'S REPRESENTATIVE

A. The **ELECTRICAL SUBCONTRACTOR** shall provide the services of a qualified, factory-trained manufacturer's technical representative who shall adequately supervise the installation and testing of all equipment furnished under this Contract. The manufacturer's representative shall certify in writing that the equipment has been installed in accordance with the manufacturer's recommendations. No further testing or equipment startup may take place until this certification is accepted by the Owner.

B. The manufacturer’s technical representative shall perform startup and functional testing of the equipment as specified herein.

C. The **ELECTRICAL SUBCONTRACTOR** shall provide training for Owner personnel. Training shall be conducted by the manufacturer's factory-trained representative who shall instruct Owner personnel in operation and maintenance of all equipment provided under this Section. Training shall be provided for [two (2) sessions of two (2) hours each]. Training shall be at times coordinated with the Owner. Training shall be provided in accordance with the requirements of Section 46 00 00 – Equipment General Provisions.

D. The services of the manufacturer's representative shall be provided for a period of not less than as follows:

1. One (1) trip of one (1) working day during the installation and startup of the equipment.

2. One (1) trip of one (1) working day two (2) months before the warranty expiration to identify any issues to be corrected under warranty.

3. One (1) trip of one (1) working day to perform training as specified herein.

E. Any additional time required to achieve successful installation and operation shall be at the expense of the **ELECTRICAL SUBCONTRACTOR**.

END OF SECTION

NO TEXT ON THIS PAGE

ATTACHMENT AK – 26 25 13 LOW VOLTAGE BUSWAYS

DIVISION 26

ELECTRICAL

(FILED SUB BID REQUIRED)

SECTION 26 25 13
LOW VOLTAGE BUSWAY[1]

PART 1 – GENERAL

1.01 FILED SUB-BID REQUIREMENTS

A. This Section is part of the filed sub-bid for Division 26 – Electrical. See Section 26 05 00.

1.02 THE REQUIREMENT

A. The **ELECTRICAL SUBCONTRACTOR** shall furnish, install, test, and place in satisfactory condition the low voltage busway systems, complete with all necessary fittings, supports, and accessories as specified herein and indicated on the Drawings.

B. All equipment specified in this Section shall be furnished by the busway manufacturer who shall be responsible for the suitability and compatibility of all included equipment.

1.03 CODES AND STANDARDS

A. The low voltage busway systems shall be designed, manufactured, and tested in accordance with the following codes and standards:

1. National Electrical Manufacturers' Association (NEMA):

   a. BU 1 – Busways

2. Massachusetts Electrical Code (MEC)

   a. Article 368 – Busways

3. Underwriters Laboratories (U.L.)

   a. ANSI/UL-857

B. Each component of the low voltage busway system shall be UL listed and the assembly shall bear the UL label. The listing shall include mounting of the busway in any position (i.e., horizontal, vertical, etc.) without derating.

---

1 Addendum No. 5

1.04 SUBMITTALS

A. In accordance with the procedures and requirements set forth in the General Conditions and Section 01 33 00 – Submittal Procedures, the **ELECTRICAL SUBCONTRACTOR** shall obtain from the equipment manufacturer and submit the following:

1. Shop Drawings

2. Operation and Maintenance Manuals

3. Spare Parts List

4. Reports of Certified Shop Tests

B. Each submittal shall be identified by the applicable Specification Section.

1.05 SHOP DRAWINGS

A. Each submittal shall be complete in all respects, incorporating all information and data listed herein and all additional information required for evaluation of the proposed equipment's compliance with the Contract Documents.

B. Partial, incomplete or illegible submittals will be returned to the **ELECTRICAL SUBCONTRACTOR** r without review for resubmittal.

C. Shop drawings for each busway system shall include but not be limited to:

1. Equipment specifications and product data sheets identifying all electrical ratings, finishes, all materials used, and methods of fabrication.

2. Complete busway system dimensioned layout drawings, isometric drawings, installation details, and locations of supports and fittings such as firestop and weatherseals. Include details of wall and floor penetrations.

3. Weights of all sections and fittings.

4. Bill of material list for each busway system.

5. Manufacturer's installation instructions indicating application conditions and limitations of use stipulated by product testing agency. Include instructions for storage, handling, protection, examination, preparation, installation, and energizing of the busway.

6. Manufacturer's warranty statement.

081115

D. The shop drawing information shall be complete and organized in such a way that the Engineer can determine if the requirements of these specifications are being met. Copies of technical bulletins, technical data sheets from "soft-cover" catalogs, and

similar information which is "highlighted" or somehow identifies the specific equipment items the **ELECTRICAL SUBCONTRACTOR** r intends to provide are acceptable and shall be submitted.

1.06 OPERATIONS AND MAINTENANCE MANUALS

A. The **ELECTRICAL SUBCONTRACTOR** r shall submit operation and maintenance manuals in accordance with the procedures and requirements set forth in the General Conditions and Division 01. The manuals shall include:

1. Instruction books and/or leaflets.

2. Final as-built construction drawings included in the shop drawings incorporating all changes made in the manufacturing process and during installation.

B. The **ELECTRICAL SUBCONTRACTOR** r shall supply a copy of NEMA Bulletin BU1.1 for installation and for maintenance instructions.

1.07 SPARE PARTS

A. The busway systems shall be furnished with all spare parts as recommended by the equipment manufacturer. In addition to the manufacturer recommended spare parts, the **ELECTRICAL SUBCONTRACTOR** r shall furnish the following spare parts for each busway system:

Number Required	Description
1 set	Joint covers

1.08 DELIVERY, STORAGE AND HANDLING

A. Deliver, store, protect, and handle products on site in accordance with the manufacturer's instructions and the provisions of these Contract Documents.

B. Accept busway on site in factory containers. Inspect for damage.

C. Protect from moisture by using appropriate coverings. Store in dry interior locations.

1.09 FIELD MEASUREMENTS

A. The Contractor shall provide and be responsible for all field measurements and provide them to the **ELECTRICAL SUBCONTRACTOR AND** manufacturer resulting in a complete and operable installation.

1.10 CONSTRUCTION SEQUENCING

A. The **ELECTRICAL SUBCONTRACTOR** shall reference Section 01 14 00 – Coordination with Owner's Operation of these Specifications.

PART 2 – PRODUCTS

2.01 MANUFACTURERS

A. The equipment covered by the Specification is intended to be standard equipment of proven performance as manufactured by reputable concerns. Equipment shall be designed, constructed and installed in accordance with the best practices of the trade, and shall operate satisfactorily when installed as shown on the Drawings.

B. It is the intent of these specifications that all components of the busway system be provided by one manufacturer who shall have the sole responsibility of matching all components and providing equipment which functions together as a system.

C. The low voltage busway shall be I-line as manufactured by The Square D Company, Pow-R-Way III as manufactured by Eaton Spectra Series as manufactured by General Electric, or approved equal.

2.02 FEEDER BUSWAY

A. General

1. Furnish and install complete low impedance prefabricated busway distribution systems as specified herein and shown on the Drawings.

2. The busway shall bear a UL label.

3. Busway shall be 480 volts, 3 phase, 3 wire as indicated on the Drawings with 50% capacity integral ground bus. The busway housing shall not serve at the ground bus.

4. The busway ampere ratings and short-circuit rating shall be as shown on the Drawings.

5. The **ELECTRICAL SUBCONTRACTOR** shall be responsible for routing the busway to coordinate with the other trades. Final field measurements shall be made by the **ELECTRICAL SUBCONTRACTOR** prior to the release of the busway for fabrication.

6. The busway system shall consist of standard 2'-0" through 10'-0" sections with special sections and fittings furnished to suit the application.

B. Short Circuit Rating and Tests

1. The short-circuit rating of the busway shall be determined according to UL Standard No. 857. This rating shall be based upon actual tests at the rated short-circuit current.

2.03 BASIC CONSTRUCTION

A. Housing

1. The busway shall be furnished in an indoor NEMA 1 enclosure.

2. The totally enclosed housing shall be manufactured by the busway manufacturer. Modifications of busway to make it totally enclosed by other than the busway manufacturer is not acceptable.

3. The indoor busway housing shall be constructed of aluminum and shall be provided with a suitable protective finish of ANSI 49 gray epoxy paint electrostatically applied. The housing shall receive an iron phosphate pretreatment inside and out prior to finish coating.

4. The indoor busway housing shall be totally enclosed, non-ventilated for protection against mechanical damage and dust accumulation.

B. Joints

1. The busway joints shall be of the one-bolt type which utilizes a high strength steel bolt(s) and Belleville washer to maintain proper pressure over a large contact surface area.

2. The bolt(s) shall be torque indicating, fully insulated, and at ground potential.

3. The bolt shall be two-headed design to indicate when proper torque has been applied and shall require only a standard long handle wrench to be properly activated.

4. Access shall be required to only one side of the busway for tightening joint bolts.

5. Joint covers shall be furnished and installed with captive hardware.

6. Busway rated 800A and above shall be suitable for removing any joint connection assembly to allow electrical isolation or physical removal of a busway length without disturbing adjacent busway lengths.

C. Bus Bars

1. The bus bars, including ground bus, shall be fabricated from high strength, 98% conductivity tin-plated copper.

2. Each bus bar shall be insulated over its entire length, except at joints and contact surfaces, with a UL listed Class B (130 degrees C) rated insulating material. Tape or heat-shrink sleeve insulation, or any other method of insulation which can allow air gaps or insulation breakdown, is not acceptable.

3. The temperature rise at any point in the busway system shall not exceed 55 degrees C rise above a 40 degrees C ambient temperature when operating continuously at rated load current.

4. Sheets of polyester (mylar) film shall be placed between bus bars and between bus bars and the housing.

D. Support of Busway

1. Hanger spacing shall not exceed manufacturer’s recommendations.

a. Indoor busway shall be approved for hanger spacing of up to 10'-0" on horizontal runs and 16'-0" when vertically mounted.

b. Outdoor busway shall be suitable for hanger spacing of up to five feet (5'-0") on horizontal and vertical runs.

2.04 VOLTAGE DROP

A. The voltage drop (input voltage minus output voltage) specified shall be based on the busway operating at full rated current and at stabilized operating temperature in 30 degrees C ambient temperature.

B. The three-phase, line-to-line voltage drop shall not exceed 2.4 volts per hundred feet at 40% power factor concentrated load.

C. The line-to-line voltage drop shall not exceed 3.3 volts per hundred feet at the load power factor which produces maximum voltage drop in the busway.

PART 3 – EXECUTION

3.01 INSTALLATION

A. The busway systems shall be furnished and installed as shown on the Drawings and in accordance with the manufacturer's installation instructions. One (1) copy of these instructions and additional instructions detailed in NEMA publication BU1.1 shall be included with the equipment at time of shipment. The equipment shall be suitably protected until accepted by the Owner.

B. The equipment shall be installed and checked in accordance with the manufacturer's recommendations. This shall include, but not be limited to, the following:

1. Checking to ensure that all bus bars are torqued to the manufacturer's recommendations.

2. Assemble all sections, remove all shipping braces, and connect all shipping split mechanical and electrical connections.

C. Install busway length with expansion fitting at each location where busway run crosses building expansion joint.

D. **ELECTRICAL SUBCONTRACTOR** shall not install busway when installation location is not protected from moisture.

E. Install busway with integral fire stops located where busway penetrates fire-rated walls and floors. Seal around opening to maintain fire-rating of wall or floor.

F. Provide concrete curb around interior floor penetrations.

3.02 PAINTING

A. Prior to final completion of the work, all metal surfaces of the busway systems shall be cleaned thoroughly, and all scratches and abrasions shall be retouched with the same lacquer as used for shop finishing coats.

3.03 TESTING

A. All tests shall be performed in accordance with the requirements of the General Conditions and Division 01. The following tests are required:

1. Certified Shop Tests and Reports

a. Submit notarized and certified copies of all test reports.

b. As a minimum, the entire busway system shall go through a quality inspection before shipment. This inspection shall include, but is not limited to, the following:

1) Physical inspection of the structure, supports and the electrical conductors.

2) General electrical tests

3) AC dielectric tests of the busway system

4) Markings/labels, including instructional type, Underwriters Laboratory (U.L.), and inspector's stamps.

c. The manufacturer shall use integral quality control checks throughout the manufacturing process to maintain the correctness of the busway system.

d. The busway shall be given routine factory tests in accordance with the requirement of the ANSI and NEMA standards. Temperature rises may be certified from basic design.

2. Field Tests

a. Field testing shall be done in accordance with the requirements specified in the General Conditions, Division 01, and NETA Acceptance Testing Specifications, latest edition.

b. After installation, busway shall be tested for insulation levels. Insulation resistance between bus bars and between bus bars conductor and ground shall be tested. Testing for insulation levels shall be as follows:

1) Apply 1,000 VDC from a Megaohmeter for one (1) minute. Resistance shall be no less than 100 Megaohms.

B. All tests shall be made by and at the expense of the **ELECTRICAL SUBCONTRACTOR** who shall supply all testing equipment. Test reports shall be submitted to the Engineer.

END OF SECTION

ATTACHMENT AL – 26 27 26 WIRING DEVICES

DIVISION 26

ELECTRICAL

(FILED SUB BID REQUIRED)

SECTION 26 27 26

WIRING DEVICES[1]

PART 1 – GENERAL

1.01 FILED SUB-BID REQUIREMENTS

A. This Section is part of the filed sub-bid for Division 26 – Electrical. See Section 26 05 00.

1.02 THE REQUIREMENT

A. The **ELECTRICAL SUBCONTRACTOR** shall furnish and install all switches, occupancy sensors, and receptacles as shown on the Drawings.

B. All switches and receptacles shall be furnished and installed in outlet boxes. Reference Section 26 05 33.16 – Boxes for Electrical Systems for outlet box requirements.

C. Reference Section 26 05 00 – Basic Electrical Requirements and Section 26 05 19 – Low-Voltage Conductors and Cables.

1.03 CODES AND STANDARDS

A. Wiring devices shall be designed, manufactured, and/or listed to the following standards as applicable:

1. UL 20 – General Use Snap Switches

2. UL 498 – Standard for Attachment Plugs and Receptacles

3. UL 943 – Ground Fault Circuit Interrupters

1.04 SUBMITTALS

A. In accordance with the procedures and requirements set forth in the General Conditions and Section 01 33 00 – Submittal Procedures, the **ELECTRICAL SUBCONTRACTOR** shall obtain from the equipment manufacturer and submit shop drawings. Each submittal shall be identified by the applicable Specification Section.

---

1 Addendum No. 5

1.05 SHOP DRAWINGS

A. Each submittal shall be complete in all respects, incorporating all information and data listed herein and all additional information required for evaluation of the proposed equipment's compliance with the Contract Documents.

B. Partial, incomplete, or illegible submittals will be returned to the **ELECTRICAL SUBCONTRACTOR** without review for resubmittal.

C. Shop drawings shall include, but not be limited to:

1. Product data sheets.

1.06 SPARE PARTS

A. The **ELECTRICAL SUBCONTRACTOR** shall furnish 10% (minimum of 1) spare of each receptacle, switch, and plug furnished and installed for this project.

B. Spare parts lists, included with the shop drawing submittal, shall indicate specific sizes, quantities, and part numbers of the items to be furnished. Terms such as "1 lot of packing material" are not acceptable.

C. Parts shall be completely identified with a numerical system to facilitate parts inventory control and stocking. Each part shall be properly identified by a separate number. Those parts which are identical for more than one size shall have the same parts number.

1.07 IDENTIFICATION

A. Each switch and receptacle shall be identified with the equipment item number, manufacturer's name or trademark, and such other information as the manufacturer may consider necessary, or as specified, for complete identification.

PART 2 – PRODUCTS

2.01 MANUFACTURERS

A. The equipment covered by these Specifications is intended to be standard equipment of proven performance as manufactured by reputable concerns. Equipment shall be designed, constructed and installed in accordance with the best practices of the trade, and shall operate satisfactorily when installed as shown on the Drawings.

B. The **ELECTRICAL SUBCONTRACTOR** shall use the products of a single manufacturer for each type of wiring device.

C. The **ELECTRICAL SUBCONTRACTOR** shall use the products of a single manufacturer for all device plates. Plate variations are allowed for the following devices:

102218

1. Where the selected plate manufacturer does not manufacture a suitable finish plate.

2. For heavy-duty receptacles rated at more than 30A.

3. Where non-standard plates are required, specified, or shown.

D. The **ELECTRICAL SUBCONTRACTOR** shall furnish and install all wiring devices and device plates.

E. Provide specification grade devices manufactured by Appleton, Crouse-Hinds, Leviton, Hubbell, Pass & Seymour, or Engineer approved equal.

2.02 WIRING DEVICES

A. Wall switches shall be rated for the current required to suit the application, but not less than 20A. Double pole, three-way, and four-way switches shall be provided where indicated on the Drawings, and as required. Switches shall be rated for 120-277VAC and shall be UL 20 Listed.

B. Convenience receptacles shall be rated for 20A at 125VAC and shall be UL 498 Listed. Receptacles shall be weather resistant where installed in wet or damp locations.

C. Special purpose receptacles (welders, lab equipment, etc.) shall be provided with the proper NEMA configuration and ampacity as indicated on the Drawings. The coordinating plug for each special purpose receptacle shall be provided with the equipment which it is serving.

D. Ground fault circuit interrupter receptacles shall be rated for 20A at 125VAC and shall be UL 943 Listed. Receptacles shall be weather resistant where installed in wet or damp locations.

E. All wiring devices shall be approved for use with stranded conductors, if stranded conductors are to be used with the device. Reference Section 26 05 19 – Low-Voltage Conductors and Cable for conductor requirements

2.03 DEVICE PLATES

A. Device plates for indoor flush-mounted receptacles and switches shall be made of Type 304 stainless steel, not less than 0.032 of an inch thick, with beveled edges and milled on the rear so as to lie flat against the wall. Devices plates shall be provided with a gasket.

B. Device plates for outdoor installations, indoor wet process areas, and chemical storage/transfer areas shall be Appleton Type FSK, Crouse-Hinds #DS185, or equal for wall switches. Device plates for receptacles shall be “in-use” style. “In-use”

weatherproof covers shall be rugged, minimum 3 ¼" depth, die-cast aluminum as manufactured by Thomas & Betts "Red Dot," Intermatic International, Inc., or equal.

C. Device plates for indoor dry process and non-process areas with surface mounted boxes shall be Crouse-Hinds DS32, or equal for switches, and Crouse-Hinds DS23 or equal for receptacles.

2.04 PLUGS

A. The **ELECTRICAL SUBCONTRACTOR** shall furnish suitable plugs with equipment furnished under the respective Specification Section. Plugs shall be black rubber or plastic. For waterproof receptacles, the plugs shall be similar in construction to the receptacles and shall be encased in corrosion resistant yellow housing provided with clamping nuts and stuffing gland cable outlets.

2.05 CHEMICAL METERING PUMPS

A. The **ELECTRICAL SUBCONTRACTOR** shall furnish and install a plug/receptacle at each chemical metering pump to disconnect the 120VAC power supply to the chemical metering pump motor. The devices shall be motor circuit disconnect switch rated for the nameplate horsepower, amps, and voltage. The plug/receptacle shall be Type 4X environmental rating, meet UL 2682 and UL 1682 certifications as manufactured by Meltric, Hubbell equivalent, or equal.

2.06 PROCESS INSTRUMENTS

A. The **ELECTRICAL SUBCONTRACTOR** shall furnish and install a local disconnect switch at each process instrument (e.g., level transmitter, flow transmitter, analytical instrument etc.,) to disconnect the 120VAC power supply to the instrument. The device shall be a NSSC series manual motor starting switch without overload protection as manufactured by Crouse-Hinds, Appleton equivalent, or equal.

2.07 OCCUPANCY SENSORS

A. Occupancy sensors shall be wall or ceiling mount as indicated on the Drawings. Sensors also shall be as follows:

Type	Description	Model
A	Ceiling mount, passive infrared sensing, 360 degree viewing angle, adjustable time delay off, LED activity indicator, conformal coating for low temperature/high humidity, 120VAC line powered, equipped with test mode	CMR 9 by Sensorswitch, or approved equal
B	Ceiling mount, passive infrared sensing, 360 degree extended range viewing angle, adjustable time delay off, LED activity indicator, conformal coating for low temperature/high humidity, 120VAC line powered, equipped with test mode.	CMR 10 by Sensorswitch, or approved equal

Type	Description	Model
C	Wall mount, passive infrared sensing and ultrasonic sensing, 120 degree large area viewing angle, adjustable time delay off, LED activity indicator, conformal coating for low temperature/high humidity, 120VAC line powered, equipped with test mode	LWS PDT series by Sensorswitch, or approved equal
D	Wall mount, passive infrared sensing, 120 degree large area viewing angle, adjustable time delay off, LED activity indicator, conformal coating for low temperature/high humidity, 120VAC line powered, equipped with test mode.	LWS series by Sensorswitch, or approved equal
E	Ceiling mount, passive infrared sensing and ultrasonic sensing, 360 degree viewing angle, adjustable time delay off, LED activity indicator, conformal coating for low temperature/high humidity, 120VAC line powered, equipped with test mode	CMR 9 PDT by Sensorswitch, or approved equal

B. Sensors shall be provided with all mounting hardware, control units, and adaptors as required for a complete and operable lighting control system.

PART 3 – EXECUTION

3.01 INSTALLATION

A. Where more than one (1) switch occurs at one (1) location, gang plates shall be used.

B. All device plates shall be set true and plumb and shall fit tightly against the finished wall surfaces and outlet boxes.

C. Wiring device box (outlet box) mounting heights shall be as specified in Section 26 05 33.16 – Boxes for Electrical Systems.

D. When indicated height would place any of the equipment at an unsuitable location such as at a molding or break in wall finish, the **ELECTRICAL SUBCONTRACTOR** shall bring it to the attention of the Engineer for a decision.

E. Receptacles installed in toilet, locker, and bathrooms, and within 6 feet of a sink, shall be of ground fault interrupter type. Ground fault circuit interrupter receptacles shall also be furnished and installed in additional locations where indicated on the Drawings, and as required by the MEC.

F. All receptacles shall have a self-adhesive label installed on the top at the respective device plate that indicates which panel and which circuit number the receptacle is supplied from. Labels shall have a white background and black lettering in 14-point font.

G. The turn-off time delay for each occupancy sensor shall initially be set to 10 minutes. **ELECTRICAL SUBCONTRACTOR** shall be responsible for the proper commissioning and testing of each occupancy sensor to ensure that it operates to the Owner and Engineer’s satisfaction.

3.02 CIRCUITING

A. Convenience receptacles shall be grouped on circuits separate from the lighting circuits. A maximum of eight (8) convenience receptacles are permitted per 20A, 120V circuit, unless otherwise indicated on the Drawings.

END OF SECTION

ATTACHMENT AM – 26 28 16.13 ENCLOSED CIRCUIT BREAKERS

DIVISION 26

ELECTRICAL

(FILED SUB BID REQUIRED)

SECTION 26 28 16.13
ENCLOSED CIRCUIT BREAKERS[1]

PART 1 – GENERAL

1.01 FILED SUB-BID REQUIREMENTS

A. This Section is part of the filed sub-bid for Division 26 – Electrical. See Section 26 05 00.

1.02 THE REQUIREMENT

A. The **ELECTRICAL SUBCONTRACTOR** shall furnish and install enclosed circuit breakers of voltage and current ratings as specified herein and indicated on the Drawings.

B. This specification is intended to apply to circuit breakers separately-mounted from other equipment in an individual enclosure. This Section does not apply to circuit breakers as part of an equipment assembly such as motor control centers, panelboards, switchboards, etc.

C. Reference the following specification sections:

1. Section 26 05 00 – Basic Electrical Requirements
2. Section 26 05 53 – Identification of Electrical Systems
3. Section 26 43 13 – Surge Protective Devices

1.03 CODES AND STANDARDS

A. Enclosed circuit breakers shall comply with the following codes and standards:

1. UL 489 – Molded Case Circuit Breakers, Molded Case Switches, and Circuit Breaker Enclosures
2. UL 1203 – Standard for Explosion-proof and Dust-ignition-proof Electrical Equipment for use in Hazardous (Classified) Locations

---

1 Addendum No. 5

3. NEMA 250 – Enclosures for Electrical Equipment

4. Massachusetts Electrical Code

1.04 SUBMITTALS

A. In accordance with the procedures and requirements set forth in the General Conditions and Section 01 33 00 – Submittal Procedures, the **ELECTRICAL SUBCONTRACTOR** shall obtain from the equipment manufacturer and submit the following:

1. Shop Drawings.

2. Spare Parts List.

3. Operation and Maintenance Manuals.

B. Each submittal shall be identified by the applicable Specification Section.

1.05 SHOP DRAWINGS

A. Each submittal shall be complete in all respects, incorporating all information and data listed herein and all additional information required for evaluation of the proposed equipment's compliance with the Contract Documents.

B. Partial, incomplete, or illegible submittals will be returned to the **ELECTRICAL SUBCONTRACTOR** without review for resubmittal.

C. Shop drawings shall include but not be limited to:

1. Product data sheets.

2. Complete assembly, layout, and installation drawings with clearly marked dimensions for each enclosed circuit breaker.

1.06 SPARE PARTS

A. For each enclosed circuit breaker, the **ELECTRICAL SUBCONTRACTOR** shall furnish to the Owner all spare parts as recommended by the equipment manufacturer.

1.07 IDENTIFICATION

A. Each enclosed circuit breaker shall be identified with the identification name and/or number indicated on the Drawings. A nameplate shall be securely affixed in a conspicuous place on the front of each enclosed circuit breaker. Nameplates shall be as specified in Section 26 05 53 – Identification for Electrical Systems.

081621

PART 2 – PRODUCTS

2.01 MANUFACTURERS

A. The Equipment shall be designed, constructed and installed in accordance with the best practices of the trade, and shall operate satisfactorily when installed as shown on the Drawings.

B. Enclosed circuit breakers shall be manufactured by Eaton, ABB/GE, , the Square D Company, or Siemens Energy and Automation, Inc.

2.02 ENCLOSED CIRCUIT BREAKERS

A. Circuit breakers shall be molded case type with trip and frame ratings as indicated on the Drawings. Provide electronic trip unit where indicated on the Drawings, with adjustable functions as indicated on the Drawings.

B. Circuit breakers shall have an interrupting rating of 65,000 amperes symmetrical at 480 VAC, unless otherwise indicated on the Drawings.

C. Enclosed circuit breakers in non-hazardous locations shall be UL 489 Listed. Circuit breakers in hazardous locations shall be UL 1203 Listed.

D. Enclosure Types and Materials

1. In non-hazardous locations, enclosed circuit breakers shall be furnished with the following enclosure type and material of construction, dependent upon the designation of the area in which they are to be installed. Area designations are indicated on the Drawings.

Area Designation	**Enclosure Type and Material**
Indoor Wet Process Area	NEMA 4X, Type 304 Stainless Steel
Indoor Dry Process Area	NEMA 12, Painted Steel
Indoor Dry Non-Process Area	NEMA 1, Painted Steel
Indoor Type 1 Chemical Storage/Transfer Area	NEMA 4X, Fiberglass
Indoor Type 2 Chemical Storage/Transfer Area	NEMA 4X, Type 304 Stainless Steel
All Outdoor Areas	NEMA 4X, Type 304 Stainless Steel

E. Enclosed circuit breakers shall be quick-make, quick-break and with an interlocked cover which cannot be opened when the breaker is in the “ON” position and capable of being locked in the “OPEN” position.

F. An Underwriter's Laboratories, Inc. inspection label shall appear on the interior of the enclosure.

G. Enclosed circuit breakers shall be suitable for use as service entrance equipment where indicated on the Drawings and so labeled to suit the application.

H. Where indicated on the Drawings, enclosed circuit breakers shall be 100% rated.

I. Surge Protective Devices

1. Surge protective devices (SPD) shall be provided either integral to the circuit breaker enclosure or as a separate unit external to the circuit breaker enclosure, as indicated on the Drawings. See Section 26 43 13 – Surge Protective Devices for SPD requirements.

PART 3 – EXECUTION

3.01 INSTALLATION

A. The enclosed circuit breaker shall be furnished and installed as shown on the Drawings and as recommended by the equipment manufacturer.

B. Enclosed circuit breakers shall be set true and plumb in locations as shown on the Drawings. The top of enclosure shall not exceed six (6) feet above finished floor elevation.

C. Enclosed circuit breakers shall be provided in the enclosure type and material of construction required for the area in which it is installed. Reference the requirements in Part 2 herein, and the area designations indicated on the Drawings.

3.02 TESTING

A. All tests shall be performed in accordance with the requirements of the General Conditions and Division 01. The following tests are required:

1. Witnessed Shop Tests

a. None required

2. Field Tests

a. Field testing shall be done in accordance with the requirements specified in the General Conditions, Division 01, and NETA Acceptance Testing Specifications, latest edition.

END OF SECTION

ATTACHMENT AN – 26 28 16.16 ENCLOSED SWITCHES

DIVISION 26

ELECTRICAL

(FILED SUB BID REQUIRED)

SECTION 26 28 16.16
ENCLOSED SWITCHES[1]

PART 1 – GENERAL

1.01 FILED SUB-BID REQUIREMENTS

A. This Section is part of the filed sub-bid for Division 26 – Electrical. See Section 26 05 00.

1.02 THE REQUIREMENT

A. The **ELECTRICAL CONTRACTOR** shall furnish and install separately mounted, individual disconnect switches as specified herein and indicated on the Drawings.

B. Disconnect switches for process instruments are not included in the scope of this Section and shall be as specified in Section 26 27 26 – Wiring Devices.

C. Reference Section 26 05 00 – Basic Electrical Requirements and Section 26 05 53 – Identification of Electrical Systems.

1.03 CODES AND STANDARDS

A. Disconnect switches shall be designed, manufactured, and/or listed to the following standards as applicable:

1. UL 98 – Enclosed and Dead-Front Switches

2. UL 1203 – Standard for Explosion-proof and Dust-ignition-proof Electrical Equipment for use in Hazardous (Classified) Locations.

3. NEMA 250 – Enclosures for Electrical Equipment

4. NEMA KS 1 – Heavy Duty Enclosed and Dead-Front Switches

1.04 SUBMITTALS

A. In accordance with the procedures and requirements set forth in the General Conditions and Section 01 33 00 – Submittal Procedures, the **ELECTRICAL CONTRACTOR** shall obtain from the equipment manufacturer and submit the following:

---

1 Addendum No. 5

1. Shop Drawings

2. Spare Parts List

3. Each submittal shall be identified by the applicable Specification Section.

1.05 SHOP DRAWINGS

A. Each submittal shall be complete in all respects, incorporating all information and data listed herein and all additional information required for evaluation of the proposed equipment's compliance with the Contract Documents.

B. Partial, incomplete or illegible submittals will be returned to the **ELECTRICAL CONTRACTOR** without review for resubmittal.

C. Shop drawings shall include but not be limited to:

1. Product data sheets.

2. Complete layout and installation drawings with clearly marked dimensions for each type/size/rating of disconnect switch.

3. Assembled weight of each unit.

D. The shop drawing information shall be complete and organized in such a way that the Engineer can determine if the requirements of these Specifications are being met. Copies of technical bulletins, technical data sheets from "soft-cover" catalogs, and similar information which is "highlighted" or somehow identifies the specific equipment items that the **ELECTRICAL CONTRACTOR** intends to provide are acceptable and shall be submitted.

1.06 SPARE PARTS

A. The equipment shall be furnished with all spare parts as recommended by the equipment manufacturer.

B. One (1) complete set of spare fuses for each ampere rating installed shall be furnished and delivered to the Owner at the time of final inspection.

C. Spare parts lists, included with the shop drawing submittal, shall indicate specific sizes, quantities, and part numbers of the items to be furnished. Terms such as "1 lot of packing material" are not acceptable.

D. Parts shall be completely identified with a numerical system to facilitate parts inventory control and stocking. Each part shall be properly identified by a separate number. Those parts which are identical for more than one size, shall have the same parts number.

081621

1.07 IDENTIFICATION

A. Each equipment item shall be identified with a nameplate. The nameplate shall be engraved indicating the circuit number and equipment name with which it is associated. Equipment identification shall be in accordance with Section 26 05 53 – Identification for Electrical Systems.

PART 2 – PRODUCTS

2.01 MANUFACTURERS

A. The equipment covered by this Specification is intended to be standard equipment of proven performance as manufactured by reputable concerns. Equipment shall be designed, constructed and installed in accordance with the best practices of the trade, and shall operate satisfactorily when installed as shown on the Drawings.

B. Switches shall be manufactured by the Square D Company, Eaton, the GE by ABB, or Siemens Energy and Automation, Inc.

2.02 DISCONNECT SWITCHES

A. Disconnect switches shall be heavy-duty type and/or as specified in these Specifications. Switches shall be furnished and installed as shown on the Drawings and as required by the MEC. Handles shall be lockable.

B. Disconnect switches for non-hazardous areas shall be UL 98 Listed. Disconnect switches for hazardous areas shall be UL 1203 Listed.

C. Switches shall meet NEMA Standard KS 1 type HD requirements, be, single-throw, be externally operated, and be fused or non-fused as indicated on the Drawings. Switches shall have the number of the poles, voltage, and ampere ratings as shown on the Drawings.

D. Enclosure Types and Materials

1. In non-hazardous locations, disconnect switches shall be furnished with the following enclosure type and material of construction, dependent upon the designation of the area in which they are to be installed. Area designations are indicated on the Drawings.

Area Designation	Enclosure Type and Material
Indoor Wet Process Area	NEMA 4X, Type 304 Stainless Steel
Indoor Dry Process Area	NEMA 12, Painted Steel
Indoor Dry Non-Process Area	NEMA 1, Painted Steel

Area Designation	Enclosure Type and Material
Indoor Type 1 Chemical Storage/Transfer Area	NEMA 4X, Fiberglass
Indoor Type 2 Chemical Storage/Transfer Area	NEMA 4X, Type 304 Stainless Steel
All Outdoor Areas	NEMA 4X, Type 304 Stainless Steel

E. Disconnect switches shall be quick-make, quick-break and with an interlocked cover which cannot be opened when switch is in the "ON" position and capable of being locked in the "OPEN" position.

F. A complete set of fuses for all switches shall be furnished and installed as required. Time-current characteristic curves of fuses serving motors or connected in series with circuit breakers shall be coordinated for proper operation. Fuses shall have voltage rating not less than the circuit voltage.

G. Disconnect switches shall be furnished with a factory installed internal barrier kit that helps prevent accidental contact with live parts and provides “finger-safe” protection when the door of the enclosed switch is open.

H. Disconnect switches shall be furnished with a manufacturer-supplied ground lug kit for termination of equipment grounding conductors. Where a grounded (neutral) conductor is shown on the Drawings in the conduits connected to the disconnect switch, a manufacturer-supplied neutral bar shall be furnished for termination of the grounded conductors. Third party ground lug and neutral lug kits not supplied by the disconnect switch manufacturer are not acceptable.

I. Fused disconnect switches shall be furnished for motor operated valve and gate actuators where shown on the Drawings. The **ELECTRICAL CONTRACTOR** shall coordinate the supply of these fused switches with the specific requirements of the actuator. Fuses with fast fault clearing times may be required for modulating valve actuators.

J. Disconnect switches for all motors connected to variable frequency drives (VFDs) shall be furnished with a factory installed electrical interlock kit that includes one (1) early-break auxiliary contact rated for 5A (minimum) at 120 VAC to be used to open the control circuit before the main switch blades break.

PART 3 – EXECUTION

3.01 INSTALLATION

A. All disconnect switches shall be mounted five (5) feet above the floor or finished grade, at the equipment height where appropriate, or where shown otherwise.

B. Disconnect switches shall be provided in the enclosure type and material of construction required for the area in which it is installed. Reference the requirements in Part 2 herein, and the area designations indicated on the Drawings.

3.02 TESTING

A. All tests shall be performed in accordance with the requirements of the General Conditions and Division 01. The following tests are required:

1. Field Tests

a. Field testing shall be done in accordance with the requirements specified in the General Conditions, Division 01, and NETA Acceptance Testing Specifications, latest edition.

END OF SECTION

NO TEXT ON THIS PAGE

ATTACHMENT AO – 26 2913.13 LOW-VOLTAGE ENCLOSED MOTOR CONTROLLERS – FULL VOLTAGE

DIVISION 26

ELECTRICAL

(FILED SUB BID REQUIRED)

SECTION 26 29 13.13

LOW-VOLTAGE ENCLOSED MOTOR CONTROLLERS – FULL VOLTAGE[1]

PART 1 – GENERAL

1.01 FILED SUB-BID REQUIREMENTS

A. This Section is part of the filed sub-bid for Division 26 – Electrical. See Section 26 05 00.

1.02 THE REQUIREMENT

A. The **ELECTRICAL SUBCONTRACTOR** shall furnish and install separately mounted, full voltage individual motor controllers as specified herein and indicated on the Drawings. Individual motor controllers specified in this Section include magnetic motor starters and manual motor starters.

B. Reference the following specification sections:

1. Section 26 05 00 – Basic Electrical Requirements
2. Section 26 05 19 – Low-Voltage Conductors and Cables
3. Section 26 05 53 – Identification for Electrical Systems
4. Section 26 09 16 – Electric Controls and Relays

1.03 CODES AND STANDARDS

A. Individual motor controllers shall be designed, manufactured, and/or listed to the following standards as applicable:

1. UL 508A – Standard for Industrial Control Panels
2. NEMA 250 – Enclosures for Electrical Equipment

---

1 Addendum No. 5

1.04 SUBMITTALS

A. In accordance with the procedures and requirements set forth in the General Conditions and Section 01 33 00 – Submittal Procedures, the **ELECTRICAL SUBCONTRACTOR** shall obtain from the equipment manufacturer and submit the following:

1. Shop Drawings.

2. Spare Parts.

3. Reports of Certified Shop and Field Tests.

4. Operation and Maintenance Manuals.

B. Each submittal shall be identified by the applicable Specification Section.

1.05 SHOP DRAWINGS

A. Each submittal shall be complete in all respects, incorporating all information and data listed herein and all additional information required for evaluation of the proposed equipment's compliance with the Contract Documents.

B. Partial, incomplete, or illegible submittals will be returned to the **ELECTRICAL SUBCONTRACTOR** without review for resubmittal.

C. Shop drawings shall include but not be limited to:

1. Product data sheets.

2. Complete layout and installation drawings with clearly marked dimensions for each type/size/rating of individual motor controller.

3. Custom wiring diagrams for each individual motor controller. Standard wiring diagrams that are not custom created by the manufacturer for the individual motor controllers for this project are not acceptable. One wiring diagram which is typical for an equipment group (e.g. water pump) is not acceptable. Each wiring diagram shall include wire identification and terminal numbers. Indicate all devices, regardless of their physical location, on the diagrams. Identify on each respective wiring diagram specific equipment names and equipment numbers consistent with those indicated on the Drawings.

4. Bill of material list for each individual motor controller.

5. Nameplate schedule for each individual motor controller.

6. Manufacturer’s installation instructions.

032117

7. Time-current curves for each type and size protective device if requested by the Engineer.

D. The shop drawing information shall be complete and organized in such a way that the Engineer can determine if the requirements of these Specifications are being met. Copies of technical bulletins, technical data sheets from "soft-cover" catalogs, and similar information which is "highlighted" or somehow identifies the specific equipment items that the **ELECTRICAL SUBCONTRACTOR** intends to provide are acceptable and shall be submitted.

E. Prior to completion and final acceptance of the project, the **ELECTRICAL SUBCONTRACTOR** shall furnish and install "as-built" wiring diagrams for individual motor controller. These final drawings shall be plastic laminated and securely placed inside each individual motor controller unit door and included in the O&M manuals.

1.06 OPERATION AND MAINTENANCE MANUALS

A. The **ELECTRICAL SUBCONTRACTOR** shall submit operation and maintenance manuals in accordance with the procedures and requirements set forth in the General Conditions and Division 01.

1.07 SPARE PARTS

A. All spare parts as recommended by the equipment manufacturer shall be furnished to the Owner by the **ELECTRICAL SUBCONTRACTOR**. The **ELECTRICAL SUBCONTRACTOR** shall furnish the following additional spare parts:

1. Two (2) spare fuses for each size and type used.

B. The spare parts shall be packed in containers suitable for long term storage, bearing labels clearly designating the contents and the pieces of equipment for which they are intended.

C. Spare parts shall be delivered at the same time as the equipment to which they pertain. The **ELECTRICAL SUBCONTRACTOR** shall properly store and safeguard such spare parts until completion of the work, at which time they shall be delivered to the Owner.

D. Spare parts lists, included with the shop drawing submittal, shall indicate specific sizes, quantities, and part numbers of the items to be furnished. Terms such as "1 lot of packing material" are not acceptable.

E. Parts shall be completely identified with a numerical system to facilitate parts inventory control and stocking. Each part shall be properly identified by a separate number. Those parts which are identical for more than one size, shall have the same parts number.

1.08 IDENTIFICATION

A. Each equipment item shall be identified with a nameplate. The nameplate shall be engraved with the equipment name and/or number with which it is associated. Equipment identification shall be in accordance with Section 26 05 53 – Identification for Electrical Systems.

PART 2 – PRODUCTS

2.01 MANUFACTURERS

A. The equipment covered by this Specification is intended to be standard equipment of proven performance as manufactured by reputable concerns. Equipment shall be designed, constructed and installed in accordance with the best practices of the trade, and shall operate satisfactorily when installed as shown on the Drawings.

2.02 INDIVIDUAL MAGNETIC MOTOR STARTERS

A. Individual magnetic motor starters shall be combination type complete with motor circuit protectors (MCP's). Starters shall be rated 480 VAC, 3-pole, sized for the intended load unless otherwise indicated. In no case shall a starter smaller than a NEMA Size 1 be used. Each starter shall be furnished with a minimum of two spare auxiliary contacts.

B. In non-hazardous locations, motor starters shall be furnished with the following enclosure type and material of construction, dependent upon the designation of the area in which they are to be installed. Area designations are indicated on the Drawings.

Area Designation	**Enclosure Type and Material**
Indoor Wet Process Area	NEMA 4X, Type 304 Stainless Steel
Indoor Dry Process Area	NEMA 12, Painted Steel
Indoor Dry Non-Process Area	NEMA 1, Painted Steel
Indoor Type 1 Chemical Storage/Transfer Area	NEMA 4X, Fiberglass
Indoor Type 2 Chemical Storage/Transfer Area	NEMA 4X, Type 304 Stainless Steel
All Outdoor Areas	NEMA 4X, Type 304 Stainless Steel

C. Starters shall be provided with all coils and controls for 120 VAC operation, unless otherwise indicated on the Drawings.

D. The motor controller manufacturer is advised to review the total Contract Documents for additional requirements for space heaters, power factor correction capacitors, and similar equipment which may not be specified in this Division or shown on the Drawings.

Control power transformers shall be fused on both the primary and secondary sides. The minimum control power transformer VA requirements are as shown below. Control power transformers shall be sized as required for the connected loads, plus 25% spare capacity.

1. Size 1-150 VA

2. Size 2-150 VA

3. Size 3-200 VA

4. Size 4-300 VA

5. Size 5-500 VA

E. Each starter shall be supplied with a manual reset overload relay. Manual reset shall be accomplished by a door mounted overload reset pushbutton. The relays shall be solid state type, with at least one isolated normally open and one isolated normally closed auxiliary contact that operates when a trip condition has occurred. Relays shall be self-powered, have a visible trip indicator, have a trip test function, and have selectable Class 10 or 20 operation. Overload relays shall be set for Class 10 operation unless otherwise directed by the Engineer. Overload relay shall have phase loss protection built in to trip the unit and protect the motor against single phasing. The **ELECTRICAL SUBCONTRACTOR** shall provide the overload relay model with the correct current range for each application. Overload relay shall have adjustable current range dial. Eutectic alloy and bi-metallic type overload relays are not acceptable.

F. Control Devices

1. Furnish and install control devices as required and/or shown on the Drawings. The following control devices shall be provided as specified in Section 26 09 16 – Electric Controls and Relays:

   a. Pilot devices (switches, indicating lights, etc.)

   b. Relays and timers

   c. Control Terminal blocks

G. All control wiring shall be No. 14 AWG (minimum) labeled at each end in accordance with the wiring numbers shown on the accepted shop drawings. Power wiring shall be sized to suit the maximum horsepower rating of unit; No. 12 AWG (minimum). Wiring shall be type MTW rated for 105ºC. Wire color coding shall be as specified in Section 26 05 19 – Low-Voltage Conductors and Cables.

H. Each motor starter coil shall be equipped with a surge-suppression device for protection of the solid-state equipment (e.g. programmable logic controller) wired as part of the control circuit.

I. Individual magnetic motor starters shall be as manufactured by Eaton using NEMA rated Freedom Series starters and contactors, the General Electric Company equivalent, the Square D Company equivalent, or Siemens Energy & Automation, Inc. equivalent.

2.03 INDIVIDUAL MANUAL MOTOR STARTERS

A. Individual manual motor starters in enclosures as specified above shall be furnished and installed for outdoor and indoor exposed work. Furnish and install manual motor starters in outlet boxes with flush wall plates as required for concealed work.

B. Furnish and install manual motor starters with pilot lights and overload heater elements of correct rating based on motor nameplate data.

C. Manual motor starters shall be equipped with either a push button or toggle operator with reset device or mechanism accessible without opening the enclosure.

D. Individual manual motor starters for motors one (1) horsepower and less shall be Eaton Type MS, the General Electric Company equivalent, the Square D Company equivalent, Allen-Bradley equivalent, or Siemens Energy & Automation, Inc. equivalent.

E. Individual manual motor starters for integral horsepower motors shall be Eaton Type B100 or B101, the General Electric Company equivalents, the Square D Company equivalents, Allen-Bradley equivalent, or Siemens Energy and Automation, Inc. equivalents.

PART 3 – EXECUTION

3.01 INSTALLATION

A. All individual motor starters shall be installed as indicated on the Drawings and as recommended by the equipment manufacturer.

B. Individual motor starters shall be provided in the enclosure type and material of construction required for the area in which it is installed. Reference the requirements in Part 2 herein, and the area designations indicated on the Drawings.

3.02 TESTING

A. All tests shall be performed in accordance with the requirements of the General Conditions and Division 01. The following tests are required:

1. Witnessed Shop Tests

a. None required.

2. Field Tests

a. Field testing shall be done in accordance with the requirements specified in the General Conditions, Division 01, and NETA acceptance testing specifications, latest edition.

END OF SECTION

NO TEXT ON THIS PAGE

ATTACHMENT AP – 26 29 13.16 LOW-VOLTAGE ENCLOSED MOTOR CONTROLLERS – REDUCED VOLTAGE

DIVISION 26

ELECTRICAL

(FILED SUB BID REQUIRED)

SECTION 26 29 13.16

LOW-VOLTAGE ENCLOSED MOTOR CONTROLLERS – REDUCED VOLTAGE[1]

PART 1 – GENERAL

1.01 FILED SUB-BID REQUIREMENTS

A. This Section is part of the filed sub-bid for Division 26 – Electrical. See Section 26 05 00.

1.02 THE REQUIREMENT

A. The **ELECTRICAL SUBCONTRACTOR** shall furnish and install separately mounted, individual motor controllers for 120-volt single phase, and 208 and 480-volt three phase motors as specified herein and indicated on the Drawings. Individual motor controllers specified in this Section include reduced voltage solid state starters (RVSS).

B. Reference the following specification sections:

1. Section 26 05 00 – Basic Electrical Requirements;
2. Section 26 05 19 – Low Voltage Conductors and Cables
3. Section 26 05 53 – Identification for Electrical Systems
4. Section 26 09 16 – Electric Controls and Relays

1.03 CODES AND STANDARDS

A. Individual motor controllers shall be designed, manufactured, and/or listed to the following standards as applicable:

1. UL 508 – Standard for Industrial Control Panels
2. NEMA 250 – Enclosures for Electrical Equipment

---

1 Addendum No. 5

1.04 SUBMITTALS

A. In accordance with the procedures and requirements set forth in the General Conditions and Section 01 33 00 – Submittal Procedures, the **ELECTRICAL SUBCONTRACTOR** shall obtain from the equipment manufacturer and submit the following:

1. Shop Drawings.
2. Spare Parts.
3. Reports of Certified Shop and Field Tests.
4. Operation and Maintenance Manuals.
5. Manufacturer's Field Startup Report.
6. Manufacturer's Representatives Installation Certification.

B. Each submittal shall be identified by the applicable Specification Section.

1.05 SHOP DRAWINGS

A. Each submittal shall be complete in all respects, incorporating all information and data listed herein and all additional information required for evaluation of the proposed equipment's compliance with the Contract Documents.

B. Partial, incomplete, or illegible submittals will be returned to the **ELECTRICAL SUBCONTRACTOR** without review for resubmittal.

C. Shop drawings shall include but not be limited to:

1. A Compliance, Deviations, and Exceptions (CD&E) letter. If the shop drawings are submitted without this CD&E letter, the submittal will be rejected. The letter shall include all comments, deviations and exceptions taken to the Drawings and Specifications by the **ELECTRICAL SUBCONTRACTOR** AND Equipment Manufacturer/Supplier. This letter shall include a copy of this Specification Section. In the left margin beside each and every paragraph/item, a letter "C", "D", or "E" shall be typed or written in. The letter "C" shall be for full compliance with the requirement. The letter "D" shall be for a deviation from the requirement. The letter "E" shall be for taking exception to a requirement. Any requirements with the letter "D" or "E" beside them shall be provided with a full typewritten explanation of the deviation/exception. Handwritten explanation of the deviations/exceptions is not acceptable. The CD&E letter shall also address deviations, and exceptions taken to each Drawing related to this Specification Section.

072921

2. Product data sheets.

3. Complete layout and installation drawings with clearly marked dimensions for each type/size/rating of individual motor controller. For RVSS starters, in free-standing enclosures, show conduit stub-up area locations on the Drawings.

4. Custom wiring diagrams for each individual motor controller. Standard wiring diagrams that are not custom created by the manufacturer for the individual motor controllers for this project are not acceptable. One wiring diagram which is typical for an equipment group (e.g. water pump) is not acceptable. Each wiring diagram shall include wire identification and terminal numbers. Indicate all devices, regardless of their physical location, on the diagrams. Identify on each respective wiring diagram specific equipment names and equipment numbers consistent with those indicated on the Drawings.

5. Bill of material list for each individual motor controller.

6. Nameplate schedule for each individual motor controller.

7. Manufacturer’s installation instructions.

8. Time-current curves for each type and size protective device if requested by the Engineer.

9. Approximate total shipping weight of each RVSS.

D. The shop drawing information shall be complete and organized in such a way that the Engineer can determine if the requirements of these Specifications are being met. Copies of technical bulletins, technical data sheets from "soft-cover" catalogs, and similar information which is "highlighted" or somehow identifies the specific equipment items that the **ELECTRICAL SUBCONTRACTOR** intends to provide are acceptable and shall be submitted.

E. Prior to completion and final acceptance of the project, the **ELECTRICAL SUBCONTRACTOR** shall furnish and install "as-built" wiring diagrams for individual motor controller. These final drawings shall be plastic laminated and securely placed inside each individual motor controller unit door and included in the O&M manuals.

1.06 OPERATION AND MAINTENANCE MANUALS

A. The **ELECTRICAL SUBCONTRACTOR** shall submit operation and maintenance manuals in accordance with the procedures and requirements set forth in the General Conditions and Division 01.

1.07 SPARE PARTS

A. All spare parts as recommended by the equipment manufacturer shall be furnished to the Owner by the **ELECTRICAL SUBCONTRACTOR**. The **ELECTRICAL SUBCONTRACTOR** shall furnish the following additional spare parts:

   1. Two (2) spare fuses for each size and type used.

B. The spare parts shall be packed in containers suitable for long term storage, bearing labels clearly designating the contents and the pieces of equipment for which they are intended.

C. Spare parts shall be delivered at the same time as the equipment to which they pertain. The **ELECTRICAL SUBCONTRACTOR** shall properly store and safeguard such spare parts until completion of the work, at which time they shall be delivered to the Owner.

D. Spare parts lists, included with the shop drawing submittal, shall indicate specific sizes, quantities, and part numbers of the items to be furnished. Terms such as "1 lot of packing material" are not acceptable.

E. Parts shall be completely identified with a numerical system to facilitate parts inventory control and stocking. Each part shall be properly identified by a separate number. Those parts which are identical for more than one size, shall have the same parts number.

1.08 IDENTIFICATION

A. Each equipment item shall be identified with a nameplate. The nameplate shall be engraved with the equipment name and/or number with which it is associated. Equipment identification shall be in accordance with Section 26 05 53 – Identification for Electrical Systems.

PART 2 – PRODUCTS

2.01 MANUFACTURERS

A. The equipment covered by this Specification is intended to be standard equipment of proven performance as manufactured by reputable concerns. Equipment shall be designed, constructed and installed in accordance with the best practices of the trade, and shall operate satisfactorily when installed as shown on the Drawings.

2.02 REDUCED VOLTAGE SOLID STATE STARTER

A. The solid-state reduced-voltage starter shall be UL Listed. The solid-state reduced-voltage starter shall be an integrated unit with power SCRs, logic board, an integral paralleling bypass contactor, and electronic overload relay enclosed in a single molded

housing. The starter shall meet all applicable requirements of this Section and other Sections in this Division.

B. The RVSS shall be suitable for continuous operation at 115% of its continuous ampere rating. The **ELECTRICAL SUBCONTRACTOR** is fully responsible for the review of the mechanical specifications to determine specified motor speed, horsepower and full load amperes. This information is available in the applicable mechanical specifications for each piece of equipment (e.g. backwash blower).

C. The RVSS shall be suitable for the following environmental conditions:

1. Operating Temperature: 0-50 degrees C

2. Humidity: 0-95 percent non-condensing.

3. Altitude: up to 3,300 feet.

D. The RVSS shall be suitable for operation on a 480 VAC, 3-phase, 60 Hertz system.

E. The SCR-based power section shall consist of six (6) back-to-back SCRs and shall be rated for a minimum peak inverse voltage rating of 1500 volts PIV. Units using triacs or SCR/diode combinations are not acceptable. Resistor/capacitor snubber networks shall be used to prevent false firing of SCRs due to dv/dt effects.

F. The paralleling run bypass contactor shall energize when the motor reaches full speed and close/open under one (1) times motor current.

G. The starter shall be provided with electronic overload protection as standard and shall be based on an inverse time-current algorithm. Overload protection shall be capable of being disabled during ramp start for long acceleration loads via a DIP switch setting on the device keypad. Overload protection shall be adjusted via the device keypad and shall have a motor full load ampere adjustment from 30 to 100% of the maximum continuous ampere rating of the starter. The starter shall have selectable overload class setting of 5, 10, 20 or 30 via a DIP switch setting on the device keypad. The starter shall be capable of either an electronic or mechanical reset after a fault. Units using bimetal or eutectic alloy overload relays are not acceptable.

H. The starter shall provide protection against the following conditions:

1. Improper line-side phase rotation. The starter shall stop the motor load if a line-side phase rotation other than A-B-C exists.

2. Phase loss or unbalanced conditions. The starter shall stop the motor load if a 50% current differential between any two phases is encountered.

3. Motor stall conditions.

4. Motor jam conditions.

I. The starter shall be provided with a form C normally open (NO), normally closed (NC) contact that shall change state when a fault condition exists. The contacts shall be rated 60 VA (resistive load) and 20 VA (inductive load). In addition, an LED display on the device keypad shall indicate the type of fault (Overtemp, Phase Loss, Jam, Stall, Phase Reversal, and Overload).

J. The starter shall be provided with an unpowered internal “Run” contact rated for 24VDC or 120 VAC operation.

K. The following control function adjustments on the device keypad shall be provided:

1. Selectable Torque Ramp Start or Current Limit Start

2. Adjustable Kick Start Time, 0-2 seconds

3. Adjustable Kick Start torque, 0-90%

4. Adjustable Ramp Start Time; 0.5-180 seconds

5. Adjustable Initial Starting Ramp Torque; 0-100%

6. Adjustable Smooth Stop Ramp Time; 0-60 seconds.

7. The Human Interface Module (HIM) provided for the RVSS shall be the same as provided for the variable frequency drives.

L. Enclosed units shall include a motor circuit protector (MCP) for short-circuit protection and quick disconnect means. If required, the unit shall include a 24 VDC power supply to be used as the primary control voltage source. A 120 VAC control power transformer, fused on both the primary and secondary sides, shall be provided as an additional control power source to power such devices as motor space heaters, solenoid valves, and similar control elements as required. Input and output isolation contactors shall be furnished as indicated on the Drawings.

M. Unless otherwise specified or indicated on the Drawings, the RVSS enclosure shall be dead-front, with front accessibility. The enclosure shall be designed for both bottom and top entry. The enclosure shall be designed so rear access is not required for operations, maintenance, and repair tasks. The doors shall have full length piano type hinges and shall be braced to prevent sag when fully open. Other enclosure requirements are:

1. Finish exterior of the enclosures in ANSI-61 gray enamel or furnish in a color to match the complete line-up of equipment as indicated on the Drawings and accepted by the Engineer.

2. RVSS integrated into motor control center structures or VFD enclosures shall meet the requirements of the enclosure in which it is installed.

N. In non-hazardous locations, the RVSS shall be furnished with the following enclosure type and material of construction, dependent upon the designation of the area in which they are to be installed. Area designations are indicated on the Drawings.

Area Designation	**Enclosure Type and Material**
Indoor Wet Process Area	NEMA 3R, Painted Steel
Indoor Dry Process Area	NEMA 12, Painted Steel
Indoor Dry Non-Process Area	NEMA 1, Painted Steel
Indoor Type 1 Chemical Storage/Transfer Area	NEMA 4X, Fiberglass
Indoor Type 2 Chemical Storage/Transfer Area	NEMA 3R, Painted Steel
All Outdoor Areas	NEMA 3R, Painted Steel

O. The complete starter assembly shall be rated per UL 508 for a minimum withstand rating of 65kAIC rms. Starters enclosed in motor control centers shall be by the same manufacturer.

P. Control Devices

1. Furnish and install control devices as required and/or shown on the Drawings. The following control devices shall be provided as specified in Section 26 09 16 – Electric Controls and Relays:

   a. Pilot devices (switches, indicating lights, etc.)

   b. Relays and timers

   c. Control Terminal blocks

Q. The reduced voltage solid state starter shall be the SMC-Flex with integral bypass as manufactured by Allen-Bradley, Eaton equivalent, the General Electric Company equivalent, the Square D Company equivalent, or Siemens Energy and Automation, Inc. equivalent.

PART 3 – EXECUTION

3.01 INSTALLATION

A. All individual motor starters shall be installed as indicated on the Drawings and as recommended by the equipment manufacturer.

B. Individual motor starters shall be provided in the enclosure type and material of construction required for the area in which it is installed. Reference the requirements in Part 2 herein, and the area designations indicated on the Drawings.

3.02 TESTING

A. All tests shall be performed in accordance with the requirements of the General Conditions and Division 01. The following tests are required:

1. Witnessed Shop Tests

    a. None required.

2. Field Tests

    a. Field testing shall be done in accordance with the requirements specified in the General Conditions, Division 01, and NETA acceptance testing specifications, latest edition.

3.03 SERVICES OF MANUFACTURER'S REPRESENTATIVE

A. The **ELECTRICAL SUBCONTRACTOR** shall provide the services of a qualified manufacturer's factory-trained technical representative who shall adequately supervise the installation and startup of the RVSS equipment furnished under this Contract. The manufacturer's representative shall certify in writing that the equipment has been installed in accordance with the manufacturer's recommendations. No further testing or equipment startup may take place until this certification is accepted by the Owner.

B. The manufacturer’s technical representative shall perform all startup and field acceptance testing as specified herein.

C. The **ELECTRICAL SUBCONTRACTOR** shall provide training for the Owner’s personnel. Training shall be conducted by the manufacturer's factory-trained representative who shall instruct Owner’s personnel in operation and maintenance of all equipment provided under this Section. Training shall be provided for two (2) sessions of two (2) hours each. Training shall not take place until after the motor controllers have been installed and tested. Training shall be conducted at times coordinated with the Owner.

D. The services of the manufacturer's representative shall be provided for a period of not less than as follows:

1. One (1) trip of two (2) working days during installation of the motor controllers.

2. One (1) trip of two (2) working days to perform startup and field acceptance testing of the motor controllers.

3. One (1) trip of one (1) working day two (2) months before the warranty expiration to identify any issues to be corrected under warranty.

4. One (1) trip of one (1) working day to perform training as specified herein.

E. Any additional time required to achieve successful installation and operation shall be at the expense of the **ELECTRICAL SUBCONTRACTOR**.

END OF SECTION

ATTACHMENT AQ – 26 29 23 LOW-VOLTAGE VARIABLE FREQUENCY MOTOR CONTROLLERS

DIVISION 26

ELECTRICAL

(FILED SUB BID REQUIRED)

SECTION 26 29 23

LOW VOLTAGE VARIABLE FREQUENCY MOTOR CONTROLLERS[1]

PART 1 – GENERAL

1.01 FILED SUB-BID REQUIREMENTS

A. This Section is part of the filed sub-bid for Division 26 – Electrical. See Section 26 05 00.

1.02 THE REQUIREMENT

A. The **ELECTRICAL SUBCONTRACTOR** shall furnish, install, connect, test and place in satisfactory operating condition all variable frequency drives (VFDs) as specified herein and indicated on the Drawings.

B. Reference the following Specification Sections:

1. Section 26 05 00 – Basic Electrical Requirements
2. Section 26 05 53 – Identification for Electrical Systems
3. Section 26 43 13 – Surge Protective Devices
4. Section 26 29 13.13 – Low-Voltage Enclosed Motor Controllers-Full Voltage
5. Section 26 29 13.16 – Low-Voltage Enclosed Motor Controllers-Reduced Voltage
6. Section 26 09 16 – Electric Controls and Relays

C. The **ELECTRICAL SUBCONTRACTOR** is responsible for coordinating with the driven equipment manufacturer and the VFD manufacturer to ensure that the VFD is sized properly to meet all of the requirements herein. This includes, but is not limited to, accounting for motor RPM and variable or constant torque applications. The **ELECTRICAL SUBCONTRACTOR** is responsible for including any costs related to equipment upsizing, conduit and wire upsizing, etc. that results from selecting equipment with a higher full load amp rating than was specified or used as the basis for design.

D. The variable frequency drives shall be assembled using NEMA rated components. Components designed and built to International Electrotechnical Commission (IEC)

[1] **Addendum No. 5**

standards are not recognized. Equipment designed, manufactured, and labeled in compliance with IEC standards is not acceptable.

1.03 CODES AND STANDARDS

A. VFDs shall be designed, manufactured, and/or listed to the following standards as applicable:

1. NEMA 250 – Enclosure for Electrical Equipment

2. IEEE 519 – Recommended Practice and Requirements for Harmonic Control in Electric Power Systems

3. NEMA ICS 7 – Adjustable-Speed Drives

4. NEMA ICS 61800-2 – Rating Specifications for Low Voltage Adjustable Frequency AC Power Drive Systems

5. UL 489 – Molded Case Circuit Breakers, Molded Case Switches, and Circuit Breaker Enclosures

6. UL 508A – Standard for Industrial Control Panels

7. UL 508C – Standard for Power Conversion Equipment

1.04 DEFINITIONS

A. The following definitions are provided for clarity with regard to the language used in this Specification:

1. Variable Frequency Drive (VFD) – The complete custom-engineered VFD as packaged within an overall enclosure, including the VFD unit and all other components within that enclosure as specified herein.

2. VFD Unit – The solid-state power electronic device or devices within the VFD.

1.05 SUBMITTALS

A. In accordance with the procedures and requirements set forth in General Conditions and Section 01 30 00 – Submittal Procedures, the **ELECTRICAL SUBCONTRACTOR** shall obtain from the equipment manufacturer and submit the following:

1. Shop Drawings

2. Operation and Maintenance Manuals

3. Spare Parts List

041322

4. Reports of Certified Shop and Field Tests

5. Manufacturer's Field Start-up Report

6. Manufacturer's Representative's Installation Certification

7. Pre- Equipment-Selection Harmonic Study Report

1.06 PRE-EQUIPMENT-SELECTION HARMONIC STUDY

A. A comprehensive pre-equipment-selection harmonic study shall be prepared by the **ELECTRICAL SUBCONTRACTOR**. The results of this pre-equipment selection study shall be submitted to the Engineer as part of the submittals specified herein. Should this study indicate the need for additional tuned filters, line reactors, isolation transformers, or other harmonic distortion suppression equipment, these shall be supplied and included in the Bid. Indicate the location of the harmonic suppression equipment in the submittal data. Location is subject to acceptance by the Engineer.

B. The harmonic distortion values resulting from operation of all or any variable frequency drive-driven motor-load combinations operating at full load shall be as defined in latest edition of IEEE Standard 519.

C. System single line diagrams and field access to the plant site will be provided to the **ELECTRICAL SUBCONTRACTOR** for the purpose of providing this study. **ELECTRICAL SUBCONTRACTOR** shall obtain from others other information that may be necessary to perform this study. Input data and other pertinent information used in harmonic study shall be coordinated by the **ELECTRICAL SUBCONTRACTOR** with the following:

   1. Input data/information/results of the short circuit fault analysis specified herein.

   2. Electrical system configuration and electrical equipment shop drawing submittal data including, but not being limited to new non-linear loads, new linear loads, and new capacitors.

1.07 SHOP DRAWINGS

A. Each submittal shall be complete in all respects, incorporating all information and data listed herein and all additional information required for evaluation of the proposed equipment's compliance with the Contract Documents.

B. Partial, incomplete, or illegible submittals will be returned to the **ELECTRICAL SUBCONTRACTOR** without review for resubmittal.

C. Shop drawings **for each VFD** shall include but not be limited to:

1. A Compliance, Deviations, and Exceptions (CD&E) letter. If the shop drawings are submitted without this CD&E letter, the submittal will be rejected. The letter shall include all comments, deviations and exceptions taken to the Drawings and Specifications by the **ELECTRICAL SUBCONTRACTOR** AND Equipment Manufacturer/Supplier. This letter shall include a copy of this Specification Section. In the left margin beside each and every paragraph/item, a letter "C", "D", or "E" shall be typed or written in. The letter "C" shall be for full compliance with the requirement. The letter "D" shall be for a deviation from the requirement. The letter "E" shall be for taking exception to a requirement. Any requirements with the letter "D" or "E" beside them shall be provided with a full typewritten explanation of the deviation/exception. Handwritten explanation of the deviations/exceptions is not acceptable. The CD&E letter shall also address deviations, and exceptions taken to each Drawing related to this Specification Section.

2. Complete bill of material and catalog data sheets for all equipment and devices comprising the VFD.

3. Heat loss data for each VFD.

4. Manufacturer’s warranty information.

5. Product data sheets for **all** system components, including but not limited to:

    a. VFD units

    b. RVSS units and motor overloads

    c. Harmonic correction devices and/or equipment, e.g. line reactors, passive filters, and 18-pulse phase-shifting transformers

    d. Output reactors and/or output filters

    e. Pilot lights and pilot devices

    f. Control and timing relays

    g. Enclosure fans

    h. Contactors

    i. Power supplies

    j. Control power transformers

    k. Current transformers

    l. Potential transformers

m. Circuit breakers and/or motor circuit protectors

n. Fuses

o. Terminal blocks (power, control, and shorting)

p. Surge protective devices

6. Layout drawings of the VFD that include:

a. All cabinet or enclosure dimensions, access details, and weights.

b. Required clearances around the enclosure, e.g. ventilation.

c. Conduit entry areas and/or stub-up locations.

d. Nameplate sizes, colors, and locations.

e. Physical arrangement of door mounted devices located on the variable frequency drive enclosure.

f. Physical arrangement of **all** interior components, including DIN-rail-mounted devices.

General "catalog data sheet" layout drawings which are not specific to the systems specified herein are not acceptable.

7. Custom schematic and interconnection wiring diagrams of all electrical work, including but not limited to, circuit breakers, motor circuit protectors, contactors, instrument transformers, meters, relays, timers, control devices, terminal blocks and identification numbers, wire numbers, and other equipment comprising the complete system.

a. These drawings shall be circuit specific for each motor-load combination (e.g. Pumps, etc.). Specific equipment names consistent with the Drawings shall appear on each respective diagram.

b. Indicate all devices, regardless of their physical location, on the schematic diagrams.

c. Electrical ratings of all equipment and devices shall be clearly indicated on the schematic diagrams.

Standard schematics and wiring diagrams that are not custom created by the manufacturer for the variable frequency drives for this project are not acceptable.

8. Confirmation of spare parts requirements as specified herein.

9. Table listing all motor loads connected to the VFD. Table shall include the full load amps of the APPROVED motors. Final approval of VFD shop drawings cannot be given until all motor loads for each VFD have been reviewed, approved, and shown in this table.

D. The shop drawing information shall be complete and organized in such a way that the Engineer can determine if the requirements of these Specifications are being met. Copies of technical bulletins, technical data sheets from catalogs, and similar information which is "highlighted" or somehow identifies the specific equipment items the **ELECTRICAL SUBCONTRACTOR** intends to provide are acceptable and shall be submitted.

1.08 OPERATION AND MAINTENANCE MANUALS

A. The **ELECTRICAL SUBCONTRACTOR** shall submit operation and maintenance manuals in accordance with the procedures and requirements set forth in the General Conditions, Section 01 30 00 – Submittal Procedures and Section 46 00 00 – Equipment General Provisions.

B. Prior to completion and final acceptance of the project, the **ELECTRICAL SUBCONTRACTOR** shall furnish and install "as-built" wiring diagrams for each VFD. These final drawings shall be included in the O&M manuals and an additional copy that is plastic laminated shall be securely placed inside each VFD.

C. The O&M manual shall include the “as-commissioned” parameters of each VFD in both print and digital formats.

D. If the VFDs require computer software or configuration, the O&M manual shall include copies of all programming guides/manuals.

1.09 SPARE PARTS

A. The VFDs and accessories shall be furnished with all spare parts as recommended by the equipment manufacturer. In addition to the manufacturer recommended spare parts, the **ELECTRICAL SUBCONTRACTOR** shall furnish the following spare parts:

1. Two (2) sets of fuses for each size and type of fuse provided.

2. One (1) HMI per type of HMI provided.

3. One (1) set of enclosure air filters for each VFD.

4. For each VFD unit **without** field-replaceable internals, furnish one (1) spare VFD unit per size provided.

5. For each VFD unit **with** field-replaceable internals, furnish one (1) fully functional main control circuit board per VFD unit size provided.

B. The spare parts shall be packed in containers suitable for long term storage, bearing labels clearly designating the contents and the pieces of equipment for which they are intended.

C. Spare parts shall be delivered at the same time as the equipment to which they pertain. The **ELECTRICAL SUBCONTRACTOR** shall properly store and safeguard such spare parts until completion of the Work, at which time they shall be delivered to the Owner.

D. Spare parts lists included with the shop drawing submittal shall indicate specific sizes, quantities, and part numbers of the items to be furnished. Terms such as "1 lot of packing material" are not acceptable.

E. Parts shall be completely identified with a numerical system to facilitate parts inventory control and stocking. Each part shall be properly identified by a separate number. Those parts which are identical for more than one size, shall have the same parts number.

1.10 WARRANTY

A. **ELECTRICAL SUBCONTRACTOR** shall warrant that the material and workmanship of all components and the operation of the VFDs and auxiliary equipment is in accordance with the latest design practices and meets the requirements of this Specification.

B. Warranty shall include, but not be limited to the following:

1. Replace components found to be faulty and make changes in equipment arrangement or make adjustments necessary to meet the equipment or functional requirements or this Specification.

2. System rewiring and component substitution/rebuild.

3. All accessories and appurtenances provided by the VFD manufacturer.

C. Warranty shall be in effect for a period of 24 months following final acceptance of each VFD.

PART 2 – PRODUCTS

2.01 MANUFACTURERS

A. The equipment covered by this Specification is intended to be equipment of proven performance. Equipment shall be designed, constructed, and installed in accordance with the best practices of the trade, and shall operate satisfactorily when installed as shown on the Drawings.

B. The **ELECTRICAL SUBCONTRACTOR** shall obtain the VFDs from one manufacturer who shall also manufacture and assemble the enclosure and major equipment components including, but not limited to the VFD unit and bypass starters. The

manufacturer shall have five years minimum of experience in the manufacture of similar units and shall have a general distribution to the electrical trade. **Subcontracting of wiring and/or third-party assembly is not acceptable.**

C. The VFDs shall be manufactured by the Square D Company, Rockwell Automation (Allen-Bradley), Danfoss, ABB, Toshiba or engineer approved equal.

D. The **ELECTRICAL SUBCONTRACTOR** shall be responsible for the successful application and operation of the entire drive and control system serving the motor and driven equipment. This includes the responsibility for obtaining all load, torque, speed and performance requirements from the appropriate sources and integrating these into a VFD that fulfills the requirements of this Specification.

2.02 VFD SYSTEMS

A. Operating Conditions

1. The following operating conditions are applicable for all equipment of this Specification.

   a. Humidity: 0-95%.

   b. Ambient Temperature: 0 degrees Celsius to plus 40 degrees Celsius.

   c. Altitude: up to 3,300 feet

B. Basic Design and Performance

1. Each VFD shall be a complete alternating current electric drive system including all hardware and software necessary to accomplish variable speed operation of a motor and load combination. VFDs shall be provided in accordance with the requirements indicated on the Drawings and as described in these Specifications.

2. Each VFD shall be suitable for operation as part of a 480 VAC, 3-phase, 60 Hertz power distribution system. The complete VFD system shall have a minimum short circuit current rating of 65,000 amperes symmetrical at rated voltage.

3. **ELECTRICAL SUBCONTRACTOR** is fully responsible for the review of the full Contract Documents to determine specified motor speed, horsepower and full load ampere requirements for each motor-driven load. In addition, the **ELECTRICAL SUBCONTRACTOR** shall size and select the VFD and components as follows:

   a. Each VFD shall provide, continuously, motor load current equal to 100% of the direct on-line motor nameplate full load current.

   b. Each VFD shall be selected for Variable Torque (Normal Duty) or Constant Torque (Heavy Duty) based on its respective load type served as shown in

the Load Type tables below.

Variable Torque (Normal Duty) Load Types	Constant Torque (Heavy Duty) Load Types
Vertical Turbine Pumps	Rotary Lobe Pumps
Horizontal Non-Clog Pumps	Progressive Cavity Pumps
Horizontal Self-Priming Centrifugal Pumps	Horizontal Centrifugal Chopper Pumps
Vertical Turbine Mixers	Screw Pumps
[etc]	-

c. The Load Type tables above are intended to exhaustively cover all possible equipment controlled by VFDs to be provided under Division 26 for this Contract. If a piece of equipment is found that is not explicitly listed in these tables, this discrepancy shall be brought to the attention of the Engineer (in writing) immediately for resolution **prior to submitting the Bid for this Contract.**

4. Each VFD shall be suitable to operate, at times, on a limited power source engine-generator set. The VFD shall be provided with equipment and devices to prevent waveform distortion as specified herein.

5. Each VFD shall be provided with control and sequence logic as specified herein and indicated on the Drawings. Control and sequence logic shall be designed such that the motor-load combination can be operated in the manual mode upon control and sequence logic failure, including all necessary personnel and equipment safety interlocks. Each VFD shall be designed such that specific control and protection functions can be attained through simple programming by either factory engineers or Owner's trained operating personnel. In addition, refer to Section 40 61 96 – Process Control Descriptions, for a description of the operation of each VFD.

6. Unless otherwise accepted in writing by the Engineer, VFDs shall be provided with output reactors or filters to prevent elevated voltage levels at the motor terminals that exceed the ratings of the inverter duty rated motor winding insulation.

   a. **The ELECTRICAL SUBCONTRACTOR** is responsible for providing the VFD manufacturer with estimated and field-verified cable lengths between each VFD and its respective motor. The VFD manufacturer shall select and size the output reactors or filters based on the cable lengths provided by the **ELECTRICAL SUBCONTRACTOR**. Any change in output filter or reactor selection and/or size from the Bid shall be immediately brought to the attention of the Engineer in writing for resolution.

b. The output filters or reactors shall be as manufactured by TCI, MTE Corporation, Mirus International, or engineer approved equal.

7. Motor control circuits shall be wired in accordance with the requirements specified herein and/or indicated on the Drawings.

C. Components

1. Each VFD shall contain the number of VFD units and bypass starters as shown on the Drawings and required for the applications. RVSS and FVNR bypass starters shall be as specified [elsewhere in this Specification] [in Section 26 29 13.16 – Low-Voltage Enclosed Motor Controllers-Reduced Voltage] [and in Section 26 29 13.13 – Low-Voltage Enclosed Motor Controllers-Full Voltage].

    a. Each bypass starter shall be incorporated into the VFD by the Manufacturer such that the VFD is still installed as a single overall assembly. This assembly shall allow qualified plant personnel to safely test, maintain, and work on the VFD or the bypass starter while the motor is running; that is, plant personnel should be able to safely work on the bypass starter while the load is running via the VFD and safely work on the VFD while the load is running via the bypass starter.

2. Each VFD shall contain and/or be furnished with the harmonic correction equipment as shown on the Drawings and required for the applications. Harmonic correction equipment shall be as specified elsewhere in this Specification.

3. Each VFD shall contain the number of auxiliary contacts, control power transformer(s), pilot devices and indicating lights, control relays, elapsed time meters, and other devices as specified herein, shown on the Drawings and required for the applications. The following components shall meet the requirements of Section 26 09 16 – Electrical Controls and Relays:

    a. Pilot devices (switches, indicating lights, etc.)

    b. Relays and timers

    c. Terminal blocks

4. Each VFD shall be provided with full-capacity-rated isolation contactors as shown on the Drawings. Contactors shall be electrically and mechanically interlocked as shown on the Drawings. All isolation contactors shall have a continuous current rating of no less than 115% of the associated motor nameplate full load amperes. Contactors used for isolation of VFDs that have bypass starters shown shall additionally have a short-time rating suitable for at least 8 times the associated motor nameplate full load amperes.

5. Power terminal blocks for VFD output to the motor shall be fixed-mounted to a backplane or the enclosure. Mounting the terminal blocks on DIN rails is not acceptable.

6. Electrical bus, including ground bus, shall be tin-plated copper. Power and control wiring shall be copper, color coded and identified in accordance with these Specifications.

7. Each VFD shall be of modular construction allowing normal maintenance and repair to be done with ordinary hand tools. Design and install power electronic component assemblies so that, where practicable, components can be individually removed and replaced.

8. Auxiliaries, including fans, that are required for rated load operation at maximum ambient temperature, shall be 100% redundant. New and unused spare replacement fan(s) or air conditioning unit(s), shipped in original carton, may be provided in lieu of 100% redundant auxiliaries if accepted in writing by the Engineer.

9. Circuit boards and electrical components shall meet the corrosion protection requirements specified in these Specifications. Varnished or epoxy encapsulated circuit boards and tropicalized contactors suitable for corrosive environments shall be furnished.

10. Motor Circuit Protectors

    a. Where indicated on the Drawings, VFDs shall be protected by a motor circuit protector (MCP) that is UL 489 recognized.

    b. Motor circuit protectors shall be completely enclosed molded case devices with a current sensing coil in each of the 3 poles and have a magnetic trip adjustment located on the front. The motor circuit protector shall be manually operable. The protector shall be designed to meet the MEC requirement concerning motor full load and locked-rotor current. Ampere ratings shall be clearly visible. Contacts shall be of non-welding silver alloy. Arc extinction must be accomplished by means of arc chutes, consisting of metal grids mounted in an insulating support.

    c. The motor circuit protector shall be operated by a toggle type handle and shall have a quick make, quick break overcenter switching mechanism that is mechanically trip free from the handle, so that the contacts cannot be held closed against short circuits and abnormal currents. Tripping shall be clearly indicated by the handle automatically assuming a position midway between the manual ON and OFF positions. All latch surfaces shall be ground and polished. All poles shall be so constructed that they open, close, and trip simultaneously.

    d. Each pole of these motor circuit protectors shall provide instantaneous short circuit protection by means of an adjustable magnetic only element.

    e. Motor circuit protector ratings, modifications, etc., shall be as specified herein and as required for the VFD and motor load combination. MCP ratings shall be determined by the VFD manufacturer.

11. Circuit Breakers

a. Where indicated on the Drawings, VFDs shall be protected by a UL 489 Listed circuit breaker.

b. Unless otherwise indicated, circuit breakers shall be manually operable and shall provide thermal-magnetic, inverse-time-limit overload, and instantaneous short-circuit protection.

c. Circuit breakers shall be molded case type, rated 480 VAC, 3 pole and have 100 ampere or larger frames. The interrupting rating shall match that of the VFD short circuit rating at 480V.

d. Overload protection shall be provided on all poles with trip settings as indicated on the Drawings. Breakers of 225-ampere frames and larger shall have interchangeable [thermal-magnetic] trip units.

e. Where indicated on the Drawings, shunt trip devices shall be provided to trip a circuit from a remote location by means of a trip coil energized from a separate circuit. A 120V shunt trip shall be capable of operating at 55% or more of rated voltage. All other shunt trips shall be capable of operating at 75% or more of rated voltage.

12. Where indicated on the Drawings, VFDs shall be provided with surge protective devices that meet the requirements of Section 26 43 13 – Surge Protection Devices.

13. Motor Protection Relays

a. Where indicated on the Drawings, VFDs shall be furnished with motor management and protection relays as specified elsewhere in this Specification.

D. Controls

1. Each VFD shall be provided with automatic and manual controls as shown on the Drawings and as required to comply with all Specifications. Controls and indicators to accomplish operation and maintenance shall be located on the variable frequency drive equipment assembly as specified herein and indicated on the Drawings.

2. The Elementary Control Schematics shown on the Drawings are **representative of design intent only.** The manufacturer shall be responsible for providing all additional components, controls, and internal wiring necessary to meet the design intent.

3. VFD circuitry shall be designed such that the enclosure cooling fans only run when the VFD unit is producing output power. Designs that allow the enclosure cooling fans to run continuously when the VFD unit is energized but not producing output

power are not acceptable. Fans that are used exclusively to provide cooling for the VFD unit (and not the overall enclosure) are permitted to run continuously if required by the VFD manufacturer's design standards/practices.

E. Enclosures

1. Equipment within the VFD enclosure shall be arranged so that it does not interfere with the entry of conduits and cables into the enclosure.

2. All pilot devices (selector switches, pushbuttons, indicating lights, etc.) and the human machine interface (HMI, specified elsewhere herein) shall be door mounted on the exterior of each VFD enclosure. Manipulation of the pilot devices or HMI, viewing of the information on the HMI, or viewing that status of pilot devices shall not require the VFD enclosure door to be opened.

3. Unless otherwise indicated on the Drawings, VFDs in non-hazardous locations, shall be furnished with the following enclosure type and material of construction, dependent upon the designation of the area in which they are to be installed. Area designations are indicated on the Drawings.

Area Designation	**Enclosure Type and Material**
Indoor Wet Process Area	NEMA 4X, Type 304 Stainless Steel
Indoor Dry Process Area	NEMA 12, Painted Steel
Indoor Dry Non-Process Area	NEMA 1, Painted Steel
All Outdoor Areas	NEMA 4X, Type 304 Stainless Steel

4. VFDs shall not be installed in hazardous locations.

5. NEMA 1 and NEMA 12 VFD enclosures shall be force ventilated with front accessibility and the following:

   a. Enclosures shall be provided with washable enclosure air intake filters that can be replaced while the enclosure door remains closed.

   b. Enclosures shall be designed for bottom or top entry of conduits and cables as required.

   c. Enclosures shall be finished in ANSI-61 gray enamel or in a color to match the complete line-up of equipment as indicated on the Drawings and accepted by the Engineer.

6. NEMA 4X VFD enclosures shall be air conditioned, dead-front, with front accessibility and the following:

a. The air conditioning system shall utilize a heat-exchange method that allows for cooling of the enclosure interior without circulating outside air through the enclosure.

b. Enclosures shall be furnished with tubular type enclosure space heaters. Space heaters shall be rated at 500V or 250V and operated at 240V or 120V, respectively.

c. VFDs shall be furnished with an additional control power transformer sized to provide power exclusively for the air conditioning system and enclosure space heater.

d. VFDs shall be furnished with a tamper-resistant hinged cover with a clear polycarbonate viewing window over the door-mounted pilot devices.

e. VFDs shall be designed for bottom entry of cables/conduits only.

7. Each VFD shall be designed such that rear access to the enclosure is not required for operations, maintenance, or repair tasks.

8. The **ELECTRICAL SUBCONTRACTOR** shall reference the Drawings for maximum dimensions of the VFDs. The Engineer shall be notified prior to the initial shop drawing submittal if exceptions to the dimensions indicated on the Drawings are to be requested.

9. Integrating VFDs into a motor control center assembly is not permitted unless specifically shown as integrated on the Drawings.

10. Enclosure doors shall have full length piano type hinges and shall be braced to prevent sag when fully open.

11. Each VFD enclosure shall be supplied with an industrial, heavy-duty flange-mount handle mechanism for the operation of the VFDs disconnecting means as follows:

a. The mechanism shall be engaged with the disconnect device at all times as an integral part of the unit regardless of the unit door position.

b. The operator handle shall have an up-down motion with the down position as off. The ON-OFF condition of the disconnecting means shall be permanently marked on the handle operator.

c. It shall be possible to lock the handle in the "OFF" position with up to three (3) 3/8-inch diameter shackle padlocks and in the "ON" position with one (1) 3/8-inch diameter shackle padlock.

d. The operator handle shall be mechanically interlocked such that the disconnecting means cannot be closed with the enclosure door open, nor

can the enclosure door be opened when the disconnecting means is closed. A defeater mechanism shall be provided so that qualified personnel can bypass these interlocks for maintenance and testing purposes. The defeater mechanism shall allow the enclosure door to be opened without interrupting the operation of the VFD.

F. Nameplates and Legend Plates

1. Provide engraved plastic nameplates and legend plates to identify each VFD and associated door mounted devices and internal components. Nameplates shall be as specified in Section 26 05 53 – Identification for Electrical Systems.

2. Equipment names and/or numbers and device identification text shown on the Drawings shall be used as the basis to engrave the nameplates and legend plates. Where the equipment identification text would exceed the capacity of the VFD manufacturer’s standard nameplate/legend plate size, the manufacturer shall provide larger nameplates and/or additional nameplates as necessary. Abbreviating equipment names/numbers and device identification text is not acceptable.

3. Control components mounted as part of the assembly, such as fuse blocks, control relays, pushbuttons, switches, and similar devices, shall be suitably marked with identification corresponding to appropriate designations on the manufacturer's wiring diagrams.

2.03 VFD UNITS

A. The VFD unit shall be the , Square D Altivar 600 series, Rockwell Automation (Allen-Bradley) PowerFlex 750 series, ABB ACQ 580 series, or Toshiba AS3/W7 series.

B. Basic Design and Performance

1. Each VFD unit shall be of adjustable frequency, adjustable voltage, pulse width modulated (PWM) design. The units shall be microprocessor controlled, fully digitally programmable, and capable of precise and repeatable speed regulation of three phase 480 VAC NEMA Design A or B induction motors. Units for other than NEMA Design A or B induction motors (e.g., NEMA Design C) shall be coordinated with the requirements of that respective load.

2. Each VFD unit shall consist of a semiconductor rectifier system, direct current link, and pulse width modulated inverter. The inverter shall invert the direct current voltage into an alternating current voltage at a frequency which shall be proportional to the desired speed. This alternating current voltage and frequency shall both vary simultaneously at a constant "Volts-Per-Hertz" ratio to operate the motor at the desired speed.

3. Each VFD unit shall operate the motor and produce full rated nameplate horsepower at the motor output shaft without exceeding motor nameplate full load current and with the motor not exceeding rated total temperature not including the additional temperature increment that constitutes the motor service factor. Motor shall retain its service factor when operated by the variable frequency drive.

4. The overall efficiency of each VFD unit shall be a minimum of 95% when operating the specified motor-load combination at rated voltage, frequency, and current.

5. Each VFD unit shall provide smooth, stepless changes in motor speed and acceleration over the entire operating speed range from minimum to maximum speed. The VFD unit shall be provided with adjustable maximum and minimum frequency limits.

6. Each VFD unit shall maintain a desired output frequency (setpoint) with a steady state accuracy of 0.5% of rated frequency of 60 Hertz for a 24-hour period and a repeatability of 0.1% of rated frequency of 60 Hertz.

7. Each VFD unit shall be capable of operating the specified load continuously at any speed within the operating speed range of 10% to 100% of rated speed. The minimum and maximum continuous operating speeds shall each be adjustable within this speed range. The variable frequency drive shall provide for field adjustment of these setpoints.

8. Each VFD unit shall be capable of controlled linear acceleration and deceleration. Each VFD unit shall be capable of ramping the speed of the motor-load combination from the minimum selected operating speed to the maximum selected operating speed in a minimum of 30 seconds. Each VFD unit shall have two (2) field-adjustable speed setpoints for the variable frequency drive to skip equipment resonant frequencies. The acceleration and deceleration time limits shall be field adjustable to values up to 120 seconds.

9. Voltage or current unbalance between phases of the VFD unit output voltage shall not exceed 3% of the instantaneous values. The VFD unit shall continuously monitor the output voltages and generate an alarm condition when the unbalance exceeds 3%. The system shall detect and generate a separate alarm for loss of any output phase voltage (single phasing). Phase unbalance shall be as defined by NEMA Standard MG-1.

10. Each VFD unit shall operate continuously without interruption of service or damage to equipment during transient input voltage variations of plus or minus 10% for a duration of 15 cycles. VFD unit output voltage regulation shall be plus or minus 2%.

C. Features and Characteristics

1. Each VFD unit shall be furnished with a Human Machine Interface (HMI) to provide controls and indication to accomplish maintenance and operational functions as specified herein and shown on the Drawings. The HMI shall be password protected after startup to prevent unauthorized personnel from making changes. The HMI shall at minimum provide indication of the following:

    a. Input Voltage

    b. Output Voltage

    c. Output Current

    d. Output Frequency

    e. Output Speed from 0-100%

    f. Alarm Read-out

2. Each VFD unit shall provide a 4-20 mADC output signal that is proportional to the drive output frequency for use as speed feedback/speed indication to external equipment.

3. Each VFD unit shall accept a 4-20 mADC speed input command signal to control the output frequency in the automatic and/or manual control modes as specified herein or indicated on the Drawings. The system shall accept the input increase/decrease command with a resolution that permits incremental changes in speed equal to or less than 0.1% of rated speed.

    a. Where shown on the Drawings, VFD units shall also accept a 0-10VDC input from a speed potentiometer for manual speed control. Each VFD unit shall be capable of automatically switching between the input speed command signals as shown on the Drawings.

4. Input Voltage Loss Handling

    a. The VFD unit shall shut down upon a loss of one or more input phases, a 3-phase complete input power loss, or a sustained input undervoltage event. A sustained input undervoltage event is defined as voltage that is less 75% of nominal, for more than 0.5 seconds.

    b. Upon restoration of 3-phase power that is at an acceptable voltage level, the VFD unit shall automatically reset (after an adjustable time delay, 0-2 minutes) and be capable of being restarted and ramping up to speed when remotely commanded through the control system or locally commanded at any local controls. Personnel shall not be required to reset the VFD unit manually after a shutdown caused by any input voltage loss event.

c. Automatic reset of the VFD unit shall be achieved through programming/parameter setpoints, time delay relays, or a combination of both.

5. Each VFD unit shall have a multiple attempt restart feature.

6. Each VFD unit shall have an automatic current limit feature to control motor currents during startup and provide a "soft start" torque profile for the motor-load combination. The VFD unit shall also limit current due to motor winding or motor lead phase-to-phase short circuit or phase-to-ground short circuit. The current limit protection setting shall be field adjustable.

7. Each VFD unit shall be furnished with programmable electronic overload and torque limits.

8. Each VFD unit shall have an automatic trip feature which will remove the drive output from the motor and allow it to decelerate safely. This automatic system shall lock-out the VFD unit and indicate the fault only upon the following conditions:

   a. Output voltage unbalance (trip threshold field set).

   b. Loss of phase on output.

   c. Motor overload.

   d. Motor stator winding fault (phase-to-ground, phase-to-phase).

   e. Unacceptable voltage variation.

   f. High variable frequency drive equipment temperature.

   g. VFD failure as determined by the manufacturer.

   h. Component failure.

   i. Overcurrent.

9. Provide each VFD unit with transmitted and received radio interference protection. In addition, provide protection against starting a rotating motor, both directions (coasting to zero speed and backspin). In the event that a motor automatic restart feature (catch the motor "on-the-fly") is provided in the VFD unit, this feature shall be capable of being disabled.

10. Each VFD unit shall include on-line diagnostics, with an automatic self-check feature that will detect a variable frequency drive failure.

    a. Diagnostics shall operate a visual alarm indicator on the HMI.

b. Diagnostics shall provide an easily readable output that can be used to isolate a failure.

c. Provide an event and diagnostic recorder to printout in narrative English of the specific fault(s) and the sequence in which the faults occurred. An indication of the "First Out" failure is a minimum for fault sequence detection.

d. Provide normally open and/or normally closed dry contacts as indicated on the Drawings for VFD failure conditions .

11. Each VFD unit shall communicate the following parameters to the control system via [*Ethernet/IP][Modbus RTU][Modbus TCP/IP*] protocol. Provide any necessary hardware gateways to provide this communication capability. The following parameters, at a minimum, shall be communicated:

    a. Motor current (all phases)

    b. Motor voltage (all phases)

    c. Motor KW

12. Where indicated on the Drawings, provide input cards that allow connection of speed encoders to the VFD unit.

13. Each VFD unit shall be provided with input/output (I/O) cards including expansion cards as necessary to facilitate connection of all I/O specified herein and shown on the Drawings.

2.04 HARMONIC CORRECTION

A. Harmonic correction devices for each VFD shall be as specified herein and located as shown on the Drawings.

B. Input Line Reactors

1. 6-pulse VFD units shall be provided with input line reactor and/or integral DC link reactor. Total reactor impedance shall be a minimum of 3% and shall not exceed 5%.

C. Passive Filters

1. Where indicated on the Drawings or where additional harmonic correction is required, 6-pulse VFD units shall be provided with a passive harmonic filter in addition to the integral DC link reactor specified above (if present.)

2. Passive harmonic filters shall be sized to attenuate harmonics resulting from operation of the VFD-driven motor load to no more than 5% THID when operating at full load, and no more than 8% THID when operating at 30% of full load. The

filter shall be equipped with power contactors configured to remove the capacitors from the circuit when the VFD-driven loads are not in operation. The harmonic filters shall be as manufactured by TCI, MTE Corporation, Mirus International, or Engineer approved equal.

3. Passive filters shall be integrated into the VFD unless accepted in writing by the Engineer or shown as separately mounted from the VFD on the Drawings.

D. 18-Pulse and Active Front End (AFE) VFDs

1. Where indicated on the Drawings, VFDs shall consist of either:

a. an 18-pulse VFD unit with an 18-pulse phase-shifting transformer, or

b. a VFD unit with an IGBT-based active front end (AFE).

2. AFE VFDs may be provided in lieu of 18-pulse VFDs (or vice-versa) **if accepted in writing by the Engineer.**

PART 3 – EXECUTION

3.01 INSTALLATION

A. The VFDs shall be installed as shown on the Drawings and in accordance with the manufacturer's installation instructions.

B. Install VFDs to allow complete door swing required for component removal.

3.02 TESTING

A. All tests shall be performed in accordance with the requirements of the General Conditions and Division 01. The following tests are required:

1. Witnessed Shop Tests

a. The VFDs specified in this Section shall be witness shop tested and inspected in accordance with the equipment manufacturer's standard procedures and the certified shop testing described below. The testing and inspection procedures shall demonstrate that the equipment tested conforms to the requirements specified, all other applicable requirements, and shall be approved by the Engineer. At least 10 days' notice shall be given the Engineer prior to such tests and inspection dates.

2. Certified Shop Tests and Reports

a. Submit description of proposed testing methods, procedures, and apparatus.

b. Factory test the complete VFD in accordance with IEEE and NEMA standards.

c. Submit factory bench-test data to indicate that the manufacturer's proposed equipment has been tested in the specified arrangement and found to achieve specified accuracy.

3. Field Tests

a. Field testing shall be done in accordance with the requirements specified in the General Conditions, Division 01, and NETA acceptance testing specifications referenced in Section 26 05 00 – Basic Electrical Requirements.

b. The **ELECTRICAL SUBCONTRACTOR** shall field measure actual harmonic distortion with tests performed by an independent testing agency acceptable to the Owner after satisfactory full-load operation. The **ELECTRICAL SUBCONTRACTOR** shall provide the harmonic distortion reports with the O&M Manual.

c. Unless otherwise indicated on the Drawings, the harmonic distortion measurements shall be made at each load center where VFDs are present.

d. Harmonic distortion measurements shall be made after VFD installation. One set of measurements shall be made with the VFD loads inactive, and one set of measurements shall be made with the VFD loads running at design capacity.

B. Acceptance of a shop test does not relieve **ELECTRICAL SUBCONTRACTOR** from requirements to meet field installation tests under specified operating conditions, nor does the inspection relieve the **ELECTRICAL SUBCONTRACTOR** of responsibilities.

C. Certification on materials and records of shop tests necessary for the inspector to verify that the requirements of the Specifications are met, shall be made available to the inspector.

D. Submit signed and dated certification that all of the factory inspection and testing procedures described herein have been successfully performed by the **ELECTRICAL SUBCONTRACTOR** prior to shipment.

3.03 SERVICES OF A MANUFACTURER’S REPRESENTATIVE

A. The **ELECTRICAL SUBCONTRACTOR** shall provide the services of a qualified manufacturer's factory-trained technical representative who shall adequately supervise the installation and startup of all equipment furnished under this Contract. The manufacturer's representative shall certify in writing that the equipment has been

installed in accordance with the manufacturer's recommendations. No further testing or equipment startup may take place until this certification is accepted by the Owner.

B. The manufacturer’s technical representative shall perform all startup and field acceptance testing as specified herein. For VFD units provided with encoder input cards, the VFD shall be commissioned to operate in induction flux vector mode so that the specified turn-down for the associated motor may be achieved.

C. The **ELECTRICAL SUBCONTRACTOR** shall provide training for the Owner’s personnel. Training shall be conducted by the manufacturer's factory-trained representative who shall instruct Owner’s personnel in operation and maintenance of all equipment provided under this Section. Training shall be provided for two (2) sessions of four (4) hours each. Training shall not take place until after the VFDs have been installed and tested. Training shall be conducted at times coordinated with the Owner.

D. The services of the manufacturer's representative shall be provided for a period of not less than as follows:

1. One (1) trip of one (1) working day during installation of the motor controllers.

2. One (1) trip of one (1) working day to perform startup and field acceptance testing of the motor controllers.

3. One (1) trip of one (1) working day to perform training as specified herein.

4. One (1) trip of one (1) working day two (2) months before the expiration of the warranty to identify any issues to be corrected under warranty.

E. Any additional time required to achieve successful installation and operation shall be at the expense of the **ELECTRICAL SUBCONTRACTOR**.

3.04 PAINTING

A. Prior to final completion of the work, all metal surfaces of the equipment shall be cleaned thoroughly, and all scratches and abrasions shall be retouched with the same coating as used for factory finishing coats.

END OF SECTION

NO TEXT ON THIS PAGE

ATTACHMENT AR – 26 32 13 ENGINE GENERATORS

DIVISION 26

ELECTRICAL

(FILED SUB BID REQUIRED)

SECTION 26 32 13
ENGINE GENERATORS[1]

PART 1 – GENERAL

1.01 FILED SUB-BID REQUIREMENTS

A. This Section is part of the filed sub-bid for Division 26 – Electrical. See Section 26 05 00.

1.02 THE REQUIREMENT

A. The **ELECTRICAL CONTRACTOR** shall furnish and install an MEC Article 701 Legally Required Standby power engine generator set complete with all accessories and appurtenances as required and as specified herein.

B. It is the intent under this Contract to require an installation complete in every detail whether or not indicated on the Drawings or specified. Consequently, the **ELECTRICAL CONTRACTOR** is responsible for all details, devices, accessories and special construction necessary to properly install, adjust, test, and place in successful and continuous operation the engine-generator set.

C. Use materials which are new, unused, and as specified. If not specifically indicated, use the best and most suitable materials of their kinds for the purpose intended, and for the design and expected conditions of service, subject to the approval of the Engineer.

D. Provide workmanship that is first class in every respect. Employ workers thoroughly experienced in such work. A neat and workmanlike appearance in the finished work shall be required.

E. All materials used shall bear the inspection labels of the Underwriter's Laboratories, if the material is of a class inspected by the Laboratory.

F. Unless otherwise indicated, the materials to be provided under this Specification shall be the products of manufacturers regularly engaged in the production of all such items and shall be the manufacturer's latest design. The products shall conform to the applicable standards of UL and NEMA, unless specified otherwise. International Electrotechnical Commission (IEC) standards are not recognized. Equipment designed, manufactured, and labeled in compliance with IEC standards is not acceptable.

---

1 Addendum No. 5

G. The engine generator sets shall fully comply with all current Environmental Protection Agency (EPA) emission regulations including, but not limited to, the New Source Performance Standards (NSPS) for stationary and non-road generator sets. The engine generator set(s) shall meet the EPA new source performance requirements required at the time the engine generator set(s) submittal is approved by the Engineer. Engines manufactured previous to the submittal approval date that do not meet the current regulated emissions levels are not acceptable.

H. Reference Section 26 05 00 – Basic Electrical Requirements, Section 26 05 19 – Low-Voltage Conductors and Cables, Section 26 27 26 – Wiring Devices, Section 26 05 53 – Identification for Electrical Systems, Section 26 23 00 – Low Voltage Switchgear, Section 26 36 23 – Automatic Transfer Switches, and Section 26 24 16 – Panelboards.

1.03 CODES AND STANDARDS

A. The packaged engine-generator system shall comply with the following Codes and Standards as a minimum:

1. NEMA MG1 – Motors and Generators.

2. NEMA MG2 – Safety Standard for Construction and Guide for Selection, Installation and Use of Motors and Generators.

3. ISO STD 8528 – Reciprocating Internal Combustion Engines.

4. ISO STD 3046 – Performance Standard for Reciprocating Internal Combustion Engines.

5. NFPA 30 – Flammable and Combustible Liquids Code.

6. NFPA 37 – Standard for Installation and use of Stationary Combustible Engine and Gas Turbines.

7. Massachusetts Electrical Code

8. NFPA 70E – Standard for Electrical Safety in the Workplace

9. NFPA 110 – Standard for Emergency and Standby Power Systems.

10. UL 508 – Industrial Control Equipment.

11. EGSA – Electrical Generating Systems Association.

12. UL 2200 – Stationary Engine Generator Assemblies

13. ANSI C57 – Dry-Type Transformers.

14. UL 142 – Steel Aboveground Tanks for Flammable and Combustible Liquids.

072721

15. UL 1236 – Standard for Battery Chargers for Charging Engine Starter Batteries.

1.04 SUBMITTALS

A. In accordance with the procedures and requirements set forth in the General Conditions and Section 01 33 00 – Submittal Procedures, the **ELECTRICAL CONTRACTOR** shall obtain from the equipment manufacturer and submit the following:

1. Shop Drawings

2. Spare Parts List

3. Reports of Certified Shop and Field Tests

4. Operation and Maintenance Manuals

5. Manufacturer's Field Start-up Report

6. Manufacturer's Representative's Installation Certification

B. Each submittal shall be identified by the applicable Specification Section.

1.05 SHOP DRAWINGS

A. Each submittal shall be complete in all respects, incorporating all information and data listed herein and all additional information required for evaluation of the proposed equipment's compliance with the Contract Documents.

B. Partial, incomplete or illegible submittals will be returned to the **ELECTRICAL CONTRACTOR** without review for resubmittal.

C. Shop drawings for each engine-generator set shall include but not be limited to:

1. A Compliance, Deviations, and Exceptions (CD&E) letter. If the shop drawings are submitted without this CD&E letter, the submittal will be rejected. The letter shall include all comments, deviations and exceptions taken to the Drawings and Specifications by the **ELECTRICAL CONTRACTOR** AND Equipment Manufacturer/Supplier. This letter shall include a copy of this Specification Section. In the left margin beside each and every paragraph/item, a letter “C”, “D”, or “E” shall be typed or written in. The letter “C” shall be for full compliance with the requirement. The letter “D” shall be for a deviation from the requirement. The letter “E” shall be for taking exception to a requirement. Any requirements with the letter “D” or “E” beside them shall be provided with a full typewritten explanation of the deviation/exception. Handwritten explanation of the deviations/exceptions is not acceptable. The CD&E letter shall also address deviations, and exceptions taken to each Drawing related to this Specification Section.

2. Manufacturers printed specification sheets showing critical engine and generator set specifications including the following:

a. Dimensions, and weights

b. Guaranteed fuel consumption at 25%, 50%, 75% and 100% of full rated load

c. Engine bhp available

d. Brake Mean Effective Pressure (BMEP)

e. Engine jacket water heat rejection

f. Exhaust flow rate and temperature at 100% of rated load

g. Ventilation and combustion air requirements

h. Exhaust backpressure limitation

i. Liquid refill capacities

j. Voltage regulation characteristics

k. Guaranteed noise levels

3. Alternator technical electrical data, including, but not limited to:

a. Alternator efficiency at 50%, 75%, and 100% load

b. Telephone Interference Factor (TIF)

c. Harmonic waveform distortion

d. Type of winding insulation and generator temperature rise

e. Per unit subtransient impedance X'' and X/R ratios for positive, negative, and zero sequences

f. Transient reactance (Xd')

g. Synchronous reactance (Xd)

h. Sub transient time constant (Td'')

i. Transient time constant (Td)

j. DC time constant (Tdc)

k. Decrement curve

4. Manufacturer's printed warranty statement of the engine and generator set showing single source responsibility by the engine manufacturer.

5. Generator control panel equipment and features. Include a written explanation of the auto start/stop logic and operation.

6. Engine-generator set and accessory product data sheets including, but not limited to, the following:

    a. Alternator strip heater

    b. Radiator

    c. Seismically rated vibration isolators

    d. Flexible exhaust coupling

    e. Exhaust silencer

    f. Batteries

    g. Battery charger

    h. Engine manufacturer’s shutdown contactors

    i. Jacket coolant heater

    j. Fuel cooler

    k. Fuel tank(s) and pump(s)

    l. Fuel level devices

    m. Output circuit breaker and trip unit

    n. Conduit

    o. Wire and Cable

    p. Wiring Devices

    q. Lighting

    r. Panelboards/combination power unit

    s. Fuel polishing system

7. Standard dealer preventative maintenance contract for review and possible adoption under a separate contract. Dealer shall have existing contracts and personnel and contractual detailed performance information available.

8. Normal operating ranges for systems temperature, pressure and speed.

9. Manufacturer's part number for the engine and generator operation guide, parts book, service manual, warranty policy, and installation guide.

10. Location of other similar units showing compliance with the experience requirements specified herein.

11. Phone numbers of twenty-four (24) hour products support contacts and locations.

12. Drawing showing right hand, left hand, and top views of proposed assembly; battery rack, isolators, exhaust silencer, conduit stub up locations, and flexible fittings; wiring schematics, interconnection diagrams (point to point), and written description of engine generator controls and alarm circuits.

13. Control panel layout drawings and wiring diagrams.

14. EPA Certificate of Conformity for Exhaust Emissions

15. Drawings and specifications for base-mounted fuel storage tank with accessories and leak detection system.

16. Detailed drawings showing plan, front, and side views as well as appropriate section views of the weatherproof, engine-generator enclosure. Include product data sheets for all appurtenances (e.g. exhaust fan, thermostat, lighting, switches, receptacles, combination power unit, etc.) to be furnished and installed in the enclosure. Drawings shall be of sufficient detail to assure proper installation by the **ELECTRICAL CONTRACTOR**.

17. Detailed drawings of the portable trailer including product data sheets.

18. Detailed drawings of the radiator mounted load bank including top, front, and side views. Include product data sheets for all components, power wiring diagrams, control panel layout drawings, and control panel wiring diagrams. Submit instruction manuals that include installation, operation, and maintenance instructions and a spare parts list.

D. The shop drawing information shall be complete and organized in such a way that the Engineer can determine if the requirements of these Specifications are being met. Copies of technical bulletins, technical data sheets from "soft-cover" catalogs, and similar information which is "highlighted" or somehow identifies the specific equipment items the **ELECTRICAL CONTRACTOR** intends to provide are acceptable and shall be submitted.

1.06 REPORTS OF CERTIFIED SHOP AND FIELD TESTS

A. Submit two (2) certified copies of all test reports. This includes all shop tests and field tests. Certified shop test reports for prototype engine-generator sets are unacceptable. The manufacturer’s serial number for the actual engine-generator set furnished for this project shall appear on all test reports.

1.07 OPERATION AND MAINTENANCE MANUALS

A. The **ELECTRICAL CONTRACTOR** shall submit operation and maintenance manuals in accordance with the procedures and requirements set forth in the General Conditions and Division 01. The manuals shall include:

1. Instruction books and/or leaflets.

2. Recommended spare parts list.

3. Final as-built construction drawings included in the shop drawings incorporating all changes made in the manufacturing process.

B. Manuals shall contain complete information in connection with assembly, operation, lubrication, adjustment, wiring diagrams and schematics, maintenance, and repair, including detailed parts lists with drawings or photographs identifying the parts. Manuals shall contain all information submitted as part of the shop drawing review process.

1.08 SPARE PARTS

A. Routine maintenance and adjustments shall be performed without the use of special tools or instruments. All spare parts as recommended by the equipment manufacturer shall be furnished to the Owner by the **ELECTRICAL CONTRACTOR**.

B. In addition to the manufacturer recommended spare parts, the **ELECTRICAL CONTRACTOR** shall furnish the following spare parts for each engine-generator set:

1. One (1) set of fuel oil particulate filters

2. One (1) set of air filters

3. One (1) set of lubrication oil filters

4. One (1) set of fuel/water separator filters

5. One (1) set of coolant filters

C. The spare parts shall be packed in containers suitable for long term storage, bearing labels clearly designating the contents and the pieces of equipment for which they are intended.

D. Spare parts shall be delivered at the same time as the equipment to which they pertain. The **ELECTRICAL CONTRACTOR** shall properly store and safeguard such spare parts until completion of the work, at which time they shall be delivered to the Owner.

E. Spare parts list, included with the shop drawing submittal, shall indicate specific sizes, quantities, and part numbers of the items to be furnished. Terms such as "1 lot of packing material" are not acceptable.

F. Parts shall be completely identified with a numerical system to facilitate parts inventory control and stocking. Each part shall be properly identified by a separate number. Those parts which are identical for more than one size, shall have the same parts number.

G. The dealer shall have sufficient parts inventory to maintain over-the-counter availability of at least 90% of any required part and 100% availability within 48 hours.

1.09 IDENTIFICATION

A. The engine-generator set shall be identified with the identification name/number indicated on the Drawings. A nameplate shall be securely affixed in a conspicuous place on the generator main circuit breaker or output termination box enclosure. Nameplates shall be as specified in Section 26 05 53 – Identification for Electrical Systems.

1.10 WARRANTY TERMS

A. The manufacturer's and Dealer's warranty shall in no event be for a period of less than four (4) years or five hundred (500) hours of operation, whichever comes first, from date of delivery of equipment to the project site and shall include repair labor, travel expense necessary for repairs at the jobsite, and expendables (lubricating oil, filters, coolant, and other service items made unusable by the defect) used during the course of repair. Submittals received without written warranties as specified shall be rejected in their entirety.

B. Provided warranty shall cover all equipment included in the scope of supply. This warranty shall include, but is not limited to, the following:

1. Engine-generator set and respective auxiliary equipment

2. All controls for the engine-generator set

C. Batteries shall be provided with two (2) year full replacement guarantee, and a 48-month pro-rated replacement schedule thereafter.

1.11 OIL SAMPLING KIT

A. The generator set supplier shall provide an oil sampling analysis kit which operating personnel shall utilize for scheduled oil sampling. All equipment needed to take oil samples shall be provided in a kit and shall include the following:

1. Sample extraction gun

2. Ten (10) Bottles

3. Ten (10) Postage-paid mailers

4. Written instructions

B. An additional oil sampling kit shall be made available to the Owner to continue the sampling when the above specified kit has been depleted. All kits in addition to that specified above shall be at an additional cost to the Owner, if the Owner desires to continue the sampling service.

1.12 PREVENTIVE MAINTENANCE AGREEMENT

A. The engine/generator set supplier shall provide a preventive maintenance agreement using qualified factory trained service personnel, for a period of 2-year minimum. Provide all recommended fluids, dealer labor, travel labor and travel mileage to complete the suggested preventive maintenance as defined in the manufacturer's Operation and Maintenance Manual and as listed below. All parts shall be new and provided by the generator manufacturer. The maintenance agreement shall include the following as a minimum:

1. Check oil level, check oil pressure safety shutdown switches, complete an oil sample analysis, check oil pressure and gauges, and inspect the system for leaks. Change oil and oil filter if required.

2. Check coolant level, inspect/replace cooling system hoses, check high/low temperature alarms and shutdowns, inspect radiator, inspect fan and fan belts (tighten or replace as required). Flush coolant system and replace coolant if required.

3. Inspect the fuel system including fuel pumps and tank(s), check fuel pressure, inspect fuel filters and replace if required, and check for water in fuel storage tank.

4. Check the battery and battery charging system including a voltage test, check and clean battery terminals, check and inspect engine starting system.

5. Inspect and test the generator, check bearing grease and add grease if required, check terminations, and complete a generator winding insulation resistance (i.e. megger test).

6. Check engine control system including overspeed alarms and shutdowns, overcrank alarm, engine starter, circuit breaker and fuses, and test and adjust engine governor.

7. Check and the engine air intake and exhaust systems for leaks and damage. Check air filter and replace if required.

8. Test automatic transfer switch. Check all indicating lights and replace as required.

9. Inspect all components of the generator enclosure including, but not limited to, lights, louvers, fans, doors, etc.

PART 2 – PRODUCTS

2.01 MANUFACTURERS

A. The equipment covered by this Specification is intended to be standard equipment of proven performance as manufactured by reputable concerns. Equipment shall be designed, constructed and installed in accordance with the best practices of the trade, and shall operate satisfactorily when installed as shown on the Drawings.

B. Consideration will be given only to the equipment of those manufacturers who have furnished comparable size diesel engine-generator sets for at least two (2) similar installations that have been in regular successful operation for not less than five (5) years.

C. The engine-generator set manufacturers shall be Cummins, Caterpillar, MTU Onsite Energy, or Kohler. No substitutions shall be permitted. The engine-generator set manufacturer and/or dealer shall be responsible for the entire engine-generator package including the engine-generator set with all accessories and equipment specified herein and all other devices required for a complete and operable system.

2.02 GENERAL DESCRIPTION

A. The engine-generator set shall be rated as specified herein and as indicated on the Drawings. It shall have the capability to operate at its rating for the duration of any power outage with all accessories including engine running devices, silencer, radiator, cooling fans, fuel system, and all appurtenances complete as it would be installed in the field. The **ELECTRICAL CONTRACTOR** shall note and take appropriate action regarding the intended operation of the engine-generator sets while connected to motor driven loads controlled by variable frequency drives (VFDs).

2.03 ENGINE

A. The engine shall be diesel, 4 cycle, radiator cooled, and shall be turbocharged having an operating speed of 1800 RPM. Engine shall operate on ASTM D-975 Grade No. 2D S15 ultra-low sulfur diesel fuel. Engines requiring any other fuel type are not acceptable.

B. The engine will not be acceptable if the design is a conversion of a naturally aspirated engine to which a turbo-blower has been attached, unless the engine is certified by the manufacturer as having been analyzed and redesigned with ample provisions for increased stresses and bearing or heat loads due to increased pressures and rate of heat liberation.

C. Brake mean effective pressure (BMEP) shall not exceed XXX psi at rated load. Brake Horsepower (BHP), and Engine-Generator efficiency shall conform with ASME, IEEE and NEMA standards that electrical energy delivered by the machine is within the minimum certified guaranteed fuel oil consumption rate and evidence that these parameters have been met shall be furnished.

D. Only engine manufacturers' standard ratings shall be acceptable. No dealer special ratings will be acceptable.

E. The specified standby kW rating shall be for continuous electrical service during interruption of the normal utility source, per NEMA standards.

F. Engine speeds shall be governed by an electronic isochronous governor that will sense generator speed and provide accurate load transient correction capability at less than 0.5 percent regulation, from no load to full load generator output.

2.04 ALTERNATOR

A. The alternator shall conform to NEMA and IEEE standards and be rated as indicated on the Drawings. The alternator shall have a UL 2200 Listing. The alternator shall be brushless, salient pole, 2/3 pole pitch and synchronous for operation at 480VAC, wye connected, as indicated on the Drawings. The alternator shall be capable of delivering XXXX SkVA (minimum) at an instantaneous voltage dip of no more than 20% voltage drop.

B. Laminations and windings shall be designed for minimum reactance, low voltage waveform distortion and maximum efficiency.

C. The main stator coils shall be form wound. Insulation shall be Class H with a temperature rise of no more than 125 degrees C according to NEMA standards. The insulation system shall be made of epoxies and polyesters which are inorganic compounds and shall prevent fungus growth.

D. The rotor shall be dynamically balanced and include amortisseur windings to minimize voltage deviations and heating effects under unbalanced load conditions.

E. Radio interference suppression (both directions) shall be provided in accordance with NEMA and IEEE Standards.

F. The alternator shall have a brushless, permanent magnet generator (PMG) excitation support system to provide input to the automatic voltage regulator to enable the alternator to support 300% of rated current for 10 seconds to allow fault clearing.

G. Waveform deviation shall not exceed 5% from true sine wave. The transient response from no load to full load in one step of the engine-generator set shall not exceed a voltage dip of 35%, a frequency dip of 20%, and shall recover to complete steady state performance within 12 seconds for both voltage and frequency. The transient response from full load to no load in one step shall not exceed a voltage overshoot of 7% and shall recover to steady state performance within 3 seconds. Transient performance shall be in accordance with ISO 8528.

H. The Telephone Influence Factor (TIF) shall be less than 50.

I. The voltage regulator shall be an adjustable, solid-state, three-phase RMS sensing, volts/hertz type. Voltage regulation shall be a minimum of +/-0.25% from no load to continuous rating. The voltage regulator shall provide +/-10% voltage adjustment. The voltage regulator shall be located within the engine control panel.

J. An alternator mounted strip heater shall be furnished and installed as part of the system. The strip heater shall be energized to prevent condensation when the engine generator set is not running.

K. Alternator outputs shall be certified by an independent testing laboratory. Certified test reports by the alternator manufacturer shall be submitted for approval showing compliance with the requirements of the Specifications.

2.05 CONTROLS

A. Engine generator monitoring and controls shall be mounted in a single NEMA 1 (gasketed) dust-tight enclosure. A suitable accessible terminal strip having all wires properly identified shall be furnished within the enclosure. The control panel shall be mounted at a height of 4'-8" measured from the center of the panel to the equipment pad or enclosure floor.

B. The control panel shall accept a dry contact input for engine starting from remote locations. The starting and stopping of the engine-generator set shall be initiated through the control panel only. When the engine starts, starting control shall automatically disconnect cranking controls. Four (4) cranking cycles of 10 seconds "ON", 10 seconds "OFF" shall be provided. The starting controls shall prevent re-cranking for a definite time after source voltage has been reduced to a low value, or the four (4) cranking cycles have been reached without a successful start. The automatic engine starting controls shall use industrial rated control type elements throughout, and controls shall have the capability to operate at 50% battery voltage.

C. Speed sensing shall be provided to protect against accidental starter engagement with a moving flywheel. Battery charging alternation output voltage is not acceptable for this purpose.

D. A UL 489 Listed generator/exciter field circuit breaker with shunt trip device shall be furnished and installed as part of the engine generator set. Shunt trip shall be activated upon engine-generator fault conditions.

E. Engine generator monitoring and control shall be provided using a microprocessor-based control panel complete with an LCD display. The devices necessary for automatic starting shall be on the engine and in the engine control panel Generator output frequency and voltage shall be adjustable through the control panel keypad. The following hardware (minimum) shall be provided on the front of the control panel; the use of the LCD display and keypad to accomplish the same function is not acceptable:

   1. Engine control mode switch or pushbuttons (Run-Off-Auto)

   2. Large, red emergency stop pushbutton

F. The following parameters (minimum) shall be shown on the LCD display or otherwise be indicated at the control panel:

1. Engine oil pressure
2. Coolant temperature
3. Generator output voltage
4. Generator output current
5. Generator elapsed run time
6. Generator output frequency
7. Engine run
8. Engine fail
9. Low coolant temperature
10. Pre-high engine temperature
11. Pre-low fuel level
12. Engine speed (RPM)

G. The following events (minimum) shall cause an immediate shutdown of the engine-generator set if it is operating or prevent starting if it is not operating. The specific event that causes the shutdown/prevents starting shall be shown on the LCD display or otherwise be indicated at the control panel. A reset shall be required to clear the fault and allow the unit to operate:

1. Engine coolant high temperature
2. Engine low oil pressure
3. Low fuel level
4. Engine overspeed
5. Engine overcrank
6. Engine tried to start but failed
7. Low coolant level

H. The generator control panel shall have a communication port capable of transmitting all available engine-generator set data via Modbus RTU protocol.

I. The generator control panel shall have Form C dry contacts rated 5A (minimum) at 120VAC/24VDC for the following signals:

1. Engine coolant high temperature

2. Engine low oil pressure

3. Pre-low fuel level

4. Low fuel level

5. Engine overspeed

6. Engine overcrank

7. Engine tried to start but failed

8. Low coolant level

9. Engine fail

10. Engine run

J. The normally closed (NC) contacts for all of the above signals (except engine run and Pre-low fuel level) shall be wired in series to provide a common "Generator System Failure" alarm for remote indication. Other contacts shall also be wired as a part of this alarm as specified elsewhere herein.

2.06 OUTPUT CIRCUIT BREAKERS

A. A main line circuit breaker as specified herein and sized as indicated on the Drawings shall be installed as a load circuit interrupting and protection device in a NEMA 1 (gasketed) dust-tight enclosure. Circuit breaker shall be UL 489 Listed and shall have an interrupting rating that is at least 10% greater than the maximum short circuit current available from the generator. Circuit breaker shall be 100% rated where indicated on the Drawings.

B. The circuit breaker shall be provided with an adjustable electronic trip unit. The trip unit shall be provided with adjustable long-time, short-time, ground fault, and instantaneous settings. It shall operate both manually for normal operation and automatically for protection against overload or short circuits. Generator/exciter field circuit breakers are not acceptable for this service.

2.07 ENGINE ACCESSORIES

A. Furnish and install the engine with all accessory equipment and appurtenances which are required for proper operation, including the following:

1. Heavy duty dry type air filter with restriction indicator

2. Heavy duty lubricating oil filter, bypass type, with replaceable absorbent-type elements

3. Lubricating oil cooler, water cooled

4. Heavy duty fuel oil filter, spin-on, with non-replaceable absorbent-type elements

5. Fuel oil fuel/water separator

6. Heavy duty crankcase vapor coalescer

7. Radiator mounted fuel cooler to cool recirculated fuel before it is re-deposited into the fuel tank as recommended by the manufacturer.

2.08 MOUNTING

A. Couple the engine and generator together through a flexible, non-backlash type, all metal coupling which overcomes all normal misalignment stresses and transmits full engine torque with ample safety factor. Also provide flexible connections for piping connections.

2.09 COOLING SYSTEM

A. Provide a radiator manufactured of a non-corrosive material mounted on the engine. The radiator core shall be coated with a corrosion resistant coating. Corrosion resistant coating shall be a corrosion resistant baked phenolic coating or similar.

B. Connect the radiator to the engine internal cooling system with flexible piping. Furnish appropriately sized coolant expansion tank for the cooling system.

C. The engine shall be cooled through a radiator sized to continuously maintain safe operation at full load and at 105°F outside ambient air with 50% ethylene glycol coolant. A blower type fan and low noise fan drive and controls shall be furnished. The fan and all rotating members and drive belts shall be guarded and meet OSHA standards. Proof of 105°F ambient temperature capability shall be required.

D. Coolant

1. After the cooling system is flushed and cleaned, provide an initial fill of coolant consisting of 50% ethylene glycol. An anti-corrosion treatment shall be added during the initial fill.

2. The coolant shall meet the requirements of the generator manufacturer including corrosion inhibitors provided in the coolant to protect the engine cooling system.

E. The engine shall be equipped with coolant heaters. Heaters shall be in accordance with the following:

1. Unit mounted thermal circulation type coolant heater with coolant recirculation pump shall be furnished to maintain engine jacket coolant temperature as recommended by manufacturer in an ambient temperature of minus 20°F. The heater shall be 480 VAC, 60 hertz, 3-phase, thermostatically controlled.

2. The heater shall be of sufficient capacity to keep the coolant at a suitable temperature for trouble-free starting.

3. Each heater shall be provided with a suitable contactor to automatically disconnect the heater when the engine is started.

F. The radiator and/or fan shall be increased in size, as required, to provide cooling of the radiator mounted load bank.

2.10 ENGINE STARTING AND CHARGING SYSTEM

A. Engine starting batteries shall be sealed, lead-acid type, rated 12 volts, wired for 12V or 24V starting. Starting batteries shall have adequate capacity for rolling the engine for five (5), ten (10) second cycles without starting, and then operating the control devices in the local generator controls for two (2) hours. The batteries shall be mounted on a suitable non-corrosive rack which is provided with a battery heating pad that operates at 120VAC or 208VAC. Batteries shall have battery cables with lugs and shall be provided with lugs for connection to the battery charger.

B. Battery charger shall be a U.L. 1236 Listed, automatic, solid-state battery charger, 10 A (min.) current limited output, ±2% voltage regulation, ±10% line voltage variation, automatic float equalizing system, DC voltmeter, and DC ammeter. Provide a Form C unpowered (dry) contact to indicate a low battery alarm condition.

C. In addition, the engine shall be provided with an engine battery charging alternator that automatically charges the starting batteries during engine operation.

2.11 EXHAUST SILENCER

A. Furnish and install an exhaust silencer. Silencers shall be of critical type and sized to produce a high degree of silencing. Reference the sound attenuation requirements specified herein.

B. Silencer shall be mounted within or exterior to the generator enclosure dependent on generator size and manufacturers standards. Silencers mounted on the outside of the enclosure shall be 316 stainless steel construction on its interior and exterior. Silencers mounted within the generator enclosure shall be painted steel and insulated using a calcium silicate material covered by a brushed aluminum skin.

C. Connect the silencer to the engine exhaust manifold with a high corrosion and temperature resistant stainless steel flexible convoluted exhaust pipe. Use flange-type connections. Provide a taper-cut tail pipe complete with rain cap to exhaust the gases to the atmosphere. The silencer system shall be designed, furnished, and installed to prevent moisture and condensation from corroding the silencer. All exterior components of the exhaust system shall be made of 316 stainless steel.

D. The silencer (if installed inside), exhaust piping, and expansion fittings, including collector box, shall be completely covered with a removable insulation blanket in order to

protect operating personnel and to reduce noise. Insulation shall be of composite fiberglass and stainless steel construction capable of withstanding 1200°F continuously. The insulation blankets shall be tailored and custom fabricated to fit the contours of the manifolds. Average weight of the insulating blanket shall be 1.5 psf. Insulation shall conform to MIL-1-16411D, Type II and shall be custom fabricated to fit the contours of the components.

2.12 WIRING

A. Furnish and install internal wiring in the engine-generator set. All internal wiring between the generator and engine-generator control panel, the on-board power source and all accessories shall be provided.

2.13 BASE MOUNTED FUEL TANK

A. The generator set shall be supplied with a U.L.-142 listed base mounted fuel tank of sufficient capacity to operate the engine-generator set at full load for a minimum of 72 hours. The tank, painted in a color as selected by the Owner, shall be fabricated from steel with a rupture basin and leak detection system. The alarm and indicator for the leak detection shall be mounted adjacent to the generator control panel and a contact for remote indication of a fuel leak condition shall be provided. This contact shall be wired as part of a common "Generator System Failure" alarm.

B. A level device shall also be furnished and installed to provide a local (generator control panel) and remote indication of pre-low fuel tank level and low fuel tank level. The pre-low fuel tank level shall activate a set of dry contacts for remote alarm indication. The low fuel tank level alarm shall shut down the engine to prevent the fuel level from dropping below the fuel pickup piping in the fuel tank. The pre-low fuel level alarm shall activate when only 6 hours of fuel for full load operation remains in the fuel tank. The remote low fuel tank level alarm shall be wired separate from the "Generator System Failure" alarm. A separate level device shall be furnished and installed to provide an analog remote indication of the fuel level in the tank. Level device shall have a 4-20mA output.

C. The tank shall be supplied with all necessary fuel supply, return, vent, and fill fittings and a fuel level gauge. The lockable fill port and level gauge shall be easily accessible from outside the enclosure. Provide a valve that automatically closes the fuel fill inlet when the tank level reaches 95% of its capacity. The vent line shall be piped to the outside and be equipped with a fill whistle. Four (4) spare 2-inch (minimum) ports shall be provided on top of the tank for future use, two (2) on each long side of the generator.

D. The underside of the tank shall not be in contact with the mounting surface (concrete pad).

E. The tank shall be equipped with an immersion heater to keep the fuel at the inlet to the engine within an acceptable temperature range. The heater shall be wired for operation on a 208 VAC, single-phase, 60 hertz power source.

F. Fuel tank shall be equipped with necessary hardware and penetrations to interface with the fuel polishing system specified herein.

2.14 WEATHERPROOF ENGINE - GENERATOR ENCLOSURE

A. Furnish and install an outdoor, weather-protective housing. The housing shall be furnished complete with a full sub-base floor resulting in complete enclosure. The enclosure shall be factory-assembled to the engine-generator set base and radiator cowling. Lifting eyes shall be provided. Housing shall provide ample airflow for generator set operation. The housing shall be constructed of 12-gauge (minimum) aluminum or 14 gauge (minimum) galvanized steel, reinforced to be vibration free in the operating mode. The housing shall have hinged side-access doors and rear control panel access door. Each door shall have at least two latch-bearing points. All doors shall be lockable. All steel sheet metal shall be primed for corrosion protection and finish painted in a color as selected by the Owner. Roof shall be peaked to allow drainage of rain water. Unit shall have sufficient guards to prevent entrance by small animals. Batteries shall fit inside enclosure and alongside the engine (batteries under the generator are not acceptable). Unit shall have engine coolant and oil drains piped to outside the unit to facilitate maintenance. Each drain line shall have a valve located near the fluid source.

B. Provide walk-around access within the enclosure. Access shall be two feet (minimum) measured from the outermost engine generator component or four feet from the rails, whichever is greater. Interior height from the sub-base floor to the ceiling shall be 84” minimum. Doors shall have panic hardware and height shall be 72”, minimum. “Skin-tight”, “reach in”, or “Drop-over” housings are not acceptable.

C. Enclosure shall be sound attenuated to provide sound level as specified herein.

D. The enclosure shall be furnished with a combination power unit as specified herein. This unit shall serve as the power distribution panel for all accessories specified herein and indicated on the Drawings (e.g. alternator mounted space heater, battery charger, leak detection system, etc.) that require “shore power”. The enclosure manufacturer shall furnish and install conduit and wire necessary to provide the power from the unit to all accessories.

   1. The combination power unit shall be a combination of a dry type transformer and a lighting panelboard. Combination power unit shall be 30kVA minimum, or larger as required to serve all loads. Combination power unit shall be 208/120V to provide both 3 phase and single-phase power. The transformer and panelboard shall be as specified in Section 26 24 16 – Panelboards. Combination power units shall be suitable for the environment in which they are installed.

E. All hardware (nuts, bolts, screws, washers, etc.) that is installed on the exterior of the generator enclosure shall be stainless steel. Galvanized steel hardware is not acceptable.

F. Aluminum stairs and aluminum handrail shall be furnished at each door. The aluminum stairs shall be as specified in Specification Section 05 51 00 – Metal Stairs. The

aluminum handrail shall be as specified in Section 05 52 00 – Handrails and Railings. The Contractor shall extend the generator concrete pad as necessary to accommodate the installation of the aluminum stairs.

G. Linear LED lighting shall be provided in sufficient quantity to maintain 20 foot-candles of illumination at floor level and shall be suitable for operation in cold weather. Compact fluorescent lighting fixtures are not acceptable. Interior lighting shall be controlled by 3-way light switches located at each door. Reference Section 26 27 26 – Wiring Devices.

H. Convenience receptacles shall be furnished at each door within the enclosure. Receptacles shall be 125V, 20A, UL 943 Listed, GFCI, two-pole, three wire grounded type. Reference Section 26 27 26 – Wiring Devices.

I. Conduit and wire shall be in accordance with Sections 26 05 33.13 – Conduit for Electrical Systems and Section 26 05 19 – Low-Voltage Conductors and Cables, respectively.

J. All air intake louvers shall be furnished with rain guards or designed to eliminate water intrusion to the interior of the enclosure when the generator is operating at full load (maximum airflow) during rain events.

2.15 SOUND ATTENUATION

A. Extreme care shall be exercised in providing equipment for and setting the engine-generator in place to guard against excessive noise transmission and vibrations. Fasten to the underside of the skids seismically-rated spring type isolators.

B. The engine-generator enclosure shall be designed, furnished, and installed to reduce source noise to 78 dB(A) as measured at seven (7) meters from the enclosure.

2.16 FUEL POLISHING SYSTEM

A. A fuel polishing system shall be provided at an easily accessible location within each engine-generator set enclosure to filter particles and water from the fuel. The fuel polishing system shall filter no less than [300] gallons per hour, and shall operate from a 208VAC, single phase power source.

B. The fuel polishing system shall have easily replaceable filter elements and have a valve and connection point for a hose to transfer fuel from the base mounted tank to another container. The filtration system shall consist of no less than five (5) stages.

C. The fuel polishing system shall be provided with an integral controller that controls the operation of the system. The controller shall operate from the same power supply used for the pump. The controller shall be UL Listed and shall be comprised of a programmable logic controller (PLC), touch screen interface, motor starter, terminal blocks, and all required circuit protective devices. The controller shall be provided in a NEMA 3R enclosure with integral thermostatically controlled strip heater. The controller shall allow the duration and frequency of fuel polishing activity to be set. The controller

shall have a normally open dry contact output to indicate general alarm status. The following parameters shall be monitored by the controller:

1. Motor overload
2. Low flow
3. System pressure
4. Water level
5. Replacement needed for each filtration stage
6. Strainer vacuum

D. All required pipe connections, valves, piping, and other plumbing appurtenances shall be furnished as required for a complete and operable system. Vendor shall install the fuel polishing system in accordance with all manufacturer's instructions and shall locate it within each enclosure to not limit access to regular maintenance activities such as filter replacement and fluid changes.

PART 3 – EXECUTION

3.01 INSTALLATION

A. The standby generator system shall be furnished and installed as indicated on the Drawings and as recommended by the equipment manufacturer.

B. The initial filling of the fuel storage tank shall be provided by the **ELECTRICAL CONTRACTOR**. Fuel tank shall be filled to its full capacity. At the conclusion of all field testing, the **ELECTRICAL CONTRACTOR** shall fill the fuel storage tank back to its full capacity. Fuel shall be ultra-low sulfur diesel Grade No. 2D S15 in accordance with ASTM D-975. Fuel shall be new and free from contaminants and water.

3.02 SERVICES OF MANUFACTURER'S REPRESENTATIVE

A. The **ELECTRICAL CONTRACTOR** shall provide the services of a qualified generator manufacturer's factory-trained technical representative who shall adequately supervise the installation and testing of all equipment furnished under this Contract. The manufacturer's representative shall certify in writing that the equipment has been installed in accordance with the manufacturer's recommendations. No further testing or equipment startup may take place until this certification is accepted by the Owner.

B. The manufacturer's technical representative shall perform all startup and field testing of the generator assembly as specified herein.

C. The **ELECTRICAL CONTRACTOR** shall provide training for the Owner's personnel. Training shall be conducted by the manufacturer's factory-trained representative who

shall instruct Owner's personnel in operation and maintenance of all equipment provided under this Section. Training shall be provided for two (2) sessions of four (4) hours each. Training shall not take place until after the generator has been installed and tested. Training shall be conducted at times coordinated with the Owner and shall occur during the same week as the training specified in Section 26 36 23 – Automatic Transfer Switches.

D. The services of the manufacturer's representative shall be provided for a period of not less than as follows:

1. One (1) trip of two (2) working days during installation of the engine-generator set.

2. One (1) trip of one (1) working day to perform startup of the engine-generator set.

3. One (1) trip of two (2) working days to perform the field testing of the engine-generator set.

4. One (1) trip of one (1) working day to perform training as specified herein.

5. One (1) trip of one (1) working day two (2) months before the warranty expiration to identify issues to be corrected under warranty. Any additional time required to achieve successful installation and operation shall be at the expense of the **ELECTRICAL CONTRACTOR**.

3.03 TESTING

A. All tests shall be performed in accordance with the requirements of the General Conditions and Division 1. The following tests are required:

1. Witnessed Shop Tests

a. The engine-generator set(s) specified in this Section shall be witness shop tested and inspected in accordance with the equipment manufacturer's standard procedures and the certified shop testing described below. The testing and inspection procedures shall demonstrate that the equipment tested conforms to the requirements specified, all other applicable requirements, and shall be approved by the Engineer. At least 10 days' notice shall be given the Engineer prior to such tests and inspection dates.

2. Certified Shop Tests

a. Fully test the engine-generator set with all accessories in the manufacturer's plant before shipment.

b. Record complete test data for frequency, amperes, volts, power factor, exhaust temperature, coolant temperature, and oil pressure.

c. Generator load tests shall be conducted through the use of balanced, three-phase, dry-type, reactive (0.8 power factor) load banks. Conduct a continuous run test using the load bank without shutdown for the engine-generator set under the following load conditions (in this specific order):

1) 3 hours - full load

2) 1 hour - 3/4 load

3) 1 hour - 1/2 load

4) 1 hour - 1/4 load

d. Fuel, lubricants, and other fluids as required for the shop tests shall be furnished by the manufacturer.

3. Field Tests

a. Field tests shall be performed by the generator manufacturer's technical representative. The **ELECTRICAL CONTRACTOR** shall obtain from the manufacturer and submit a detailed field test plan and procedures documenting the intended field test program.

b. In the presence of the Engineer and Owner, the representative shall inspect, adjust, and test the entire system after installation and leave in good working order. Field tests specific to each generator shall be conducted after the entire engine-generator system is installed including, but not limited to, the following: diesel fuel tanks including leak detection, exhaust silencer, radiators, enclosures, batteries, and all other equipment included in the complete system.

c. Field test the generator enclosure to ensure the enclosure performs as specified herein. The generator enclosure field tests shall include water tests to confirm the enclosure does not leak and that the air intake louvers eliminate water intrusion to the interior of the generator enclosure when the generator is operating at its full load capacity (maximum airflow). A garden hose shall be used to simulate falling rain for this test. Water supply and garden hose will be provided by the Owner for this test.

d. Field test, as far as practicable, all control, shutdown, and alarm circuits. Document the successful completion of these tests as witnessed by the Owner and the Engineer.

e. Generator load tests shall be conducted through the use of balanced, three-phase, dry-type, resistive (1.0 power factor) load banks. Conduct a continuous run test using the load bank without shutdown for the engine-generator set under the following load conditions (in this specific order) and in the presence of the Owner and Engineer:

1) 5 hours, full load

2) 1 hour, 3/4 load

3) 1 hour, 1/2 load

4) 1 hour, 1/4 load

f. Record complete test data for frequency, amperes, volts, power factor, exhaust temperature, coolant temperature, and oil pressure every 15 minutes during the continuous run test. If any failures, malfunctions, and/or shutdowns occur during this test, the problems shall be fixed and the test shall be restarted. The test shall not be considered complete until the generator has operated without any shutdowns for the required consecutive hours under the conditions listed above.

g. After successful completion of the load bank tests, the generator system shall then be operated for a minimum of four (4) hours with facility loads during a time period when the plant is operating at average demand. The same data shall be recorded at 15-minute intervals for this load test as for the load bank test.

h. It is the intent that the tests above take place utilizing facility loads. If the system cannot be fully loaded as required by the facility loads, the manufacturer shall connect a reactive load bank to a spare circuit breaker in the switchgear as needed to test the system under the loads described above. If any failures, malfunctions, and/or shutdowns occur during any of the transfer tests listed above, the problems shall be fixed and the test shall be restarted. Each test shall not be considered complete until the generator/switchgear system has performed the required number of transfers consecutively without any failures or malfunctions. During the transfer testing above, the loads shall remain on the utility or generator source for at least five (5) minutes in between transfers.

i. All fuel, lubricants, and other fluids required to complete all field tests shall be paid for by the **ELECTRICAL CONTRACTOR**.

4. Oil Sampling and Analysis

a. The **ELECTRICAL CONTRACTOR** shall collect a sample of engine oil from each engine for analysis after the start-up and testing has been successfully completed. The oil samples shall be analyzed at an independent laboratory that is not a part of the engine supplier's facility. Immediate notification of results shall be provided to the Owner when the analysis shows any critical reading.

b. The sampling method shall be of the atomic absorption spectrophotometry method and be accurate to within a fraction of one part per million for the following elements:

1) Iron

2) Chromium

3) Copper

4) Aluminum

5) Silicon

6) Lead

c. The sample shall also be tested for the presence of water, fuel dilution, and coolant.

3.04 FIELD ADJUSTMENTS

A. The circuit breaker trip units shall be set in the field by a qualified representative of the manufacturer, or an outside testing company retained by the **ELECTRICAL CONTRACTOR**, in accordance with the settings designated in the coordination study. See Section 26 05 00 – Basic Electrical Requirements.

3.05 PAINTING

A. Prior to final completion of the work, all metal surfaces of the equipment shall be cleaned thoroughly, and all scratches and abrasions shall be retouched with the same coating as used for factory finishing coats.

END OF SECTION

ATTACHMENT AS – 26 33 53 STATIC UNINTERRUPTABLE POWER SUPPLY

DIVISION 26

ELECTRICAL

(FILED SUB BID REQUIRED)

SECTION 26 33 53
STATIC UNINTERRUPTIBLE POWER SUPPLY[1]

PART 1 – GENERAL

1.01 FILED SUB-BID REQUIREMENTS

A. This Section is part of the filed sub-bid for Division 26 – Electrical. See Section 26 05 00.

1.02 THE REQUIREMENT

A. The **ELECTRICAL SUBCONTRACTOR** shall furnish, test, install, and place in satisfactory operation all continuous duty three phase solid state uninterruptible power systems with all spare parts, accessories, and appurtenances as specified herein and as shown on the Drawings.

B. This specification defines the electrical and mechanical characteristics and requirements for a continuous-duty three-phase, solid- state UPS system for protecting loads as designated on the Drawings.

C. The UPS assembly shall consist of an incoming section consisting of a dry type transformer, main circuit breaker and transient voltage surge suppressor. The UPS section shall consist of a three-phase converter, battery system, DC bus link and inverter section. The distribution section shall consist of a distribution panelboard and all other accessories as specified herein, indicated on the Drawings, and required to result in a complete conditioned power system.

D. The **ELECTRICAL SUBCONTRACTOR** shall obtain the packaged UPS system from one manufacturer who shall also manufacture the structure and major equipment components, which includes, but is not limited to, assemblies of panel boards, rectifier and battery charging system, batteries, static transfer switch, microprocessor-based controls for monitoring and control of the UPS, and communications interfaces. Subcontracting of wiring (i.e., from the dry type distribution transformer to the vendor supplied panel board) is not acceptable.

E. The UPS and all appurtenances shall be assembled using NEMA rated components. Components designed and built to the International Electrotechnical Commission (I.E.C.)

091605

[1] Addendum No. 5

standards are not recognized. Equipment designed, manufactured and labeled in compliance with IEC standards is not acceptable.

F. Where applicable, the vendor shall supply whatever assistance is required to ensure that digital communications between the UPS system and Process Control and Information System (PCIS) is required.

Load Description	Voltage	Amperes	KVA	(Power Factor)	Comments
IT/SCADA equipment (LP-UPS-ADM)	480V	42	30	0.99	10 Minutes backup
MOVs (LP-1-UPS-MOV-TB)	240/120V	107A	20	0.99	10 Minutes backup
MOVs (LP-2-UPS-MOV-TB)	240/120V	107A	20	0.99	10 Minutes backup

1.03 CODES AND STANDARDS

A. The UPS shall be designed in accordance with the applicable sections of the current revision of the following codes and standards.

1. American National Standards Institute (ANSI):

   a. ANSI C62.41 (IEEE 587)

   b. Massachusetts Electrical Code

2. FCC Part 15, Class A

3. National Electrical Manufacturer's Association (NEMA)

   a. PE-1

4. Underwriter's Laboratories Inc. (UL)

   a. UL 1778 (The UPS shall be UL listed per UL Standard 1778).

5. Institute of Electrical and Electronics Engineers (IEEE)

   a. IEEE Standard 1100- Recommended Practice for Powering and Grounding Sensitive Electronic Equipment ("The Emerald Book").

   b. IEEE Standard 142- Recommended Practice for Grounding Industrial and Commercial Power Systems ("The Green Book").

B. All tests shall be performed in accordance with the requirements of the General Conditions and Division 01. The following tests are required:

1. Witnessed Shop Tests

   a. The UPS specified in this Section shall be witness shop tested and inspected in accordance with the manufacturer's standard procedures. The testing and inspection procedures shall demonstrate that the equipment conforms to the requirements specified and shall be approved by the Engineer. At least 10 days' notice shall be given to the Engineer prior to such tests and inspection dates.

2. Certified Shop Tests and Reports

   a. Submit description of proposed testing methods, procedures, and apparatus.

   b. Submit notarized certified copies of all test reports.

   c. As a minimum, the entire UPS assembly shall go through a quality inspection before shipment. This inspection procedure shall include but not be limited to, the following:

      1) Physical verification that the unit meets electrical requirements (voltage input, voltage output, amperes, kW rating, ampere-hour of batteries, number of batteries, transformer connections, and correct number of circuits on panel board).

      2) The manufacturer shall perform an operational discharge and recharge test to ensure guaranteed performance.

      3) General electrical testing that includes: power circuit phasing, control circuit wiring, communications interface circuit wiring and device electrical operation. The vendor will also verify that all of the equipment grounding and bonding conductors are clearly marked for the **ELECTRICAL SUBCONTRACTOR'S** use.

      4) Verification that all connectors on power and control conductors have been torqued to the correct values.

      5) Markings/labels including instructional type, Underwriter's Laboratories (U.L.) and inspector's stamps.

3. Field Tests

   a. Field tests shall be performed in accordance with the procedures and requirements specified in the General Conditions, Division 01, and Section 26 05 00 – Basic Electrical Requirements.

1.04 SUBMITTALS

A. In accordance with the procedures and requirements set forth in the General Conditions and Section 01 33 00 – Submittal Procedures, the **ELECTRICAL SUBCONTRACTOR** shall obtain from the equipment manufacturer and submit the following:

1. Shop Drawings

2. Operations and Maintenance Manuals

3. Special Tools List

4. Special Parts List

5. Proposed Testing Methods and Reports of Certified Shop Tests.

B. Each submittal shall be identified by the applicable Specification Section.

1.05 SHOP DRAWINGS

A. Each submittal shall be complete in all respects, incorporating all information and data listed herein and all additional information required for evaluation of the proposed equipment's compliance with the Contract Documents.

B. Partial, incomplete, or illegible submissions shall be returned to the **ELECTRICAL SUBCONTRACTOR** without review for resubmittal.

C. Shop drawings for each UPS system shall include, but not be limited to:

1. Equipment specifications and product data sheets identifying all electrical ratings.

2. Complete assembly, layout, and installation drawings with clearly marked dimensions.

3. Assembled weight of units and approximate shipping weight

4. Example equipment nameplate data sheet.

5. Plan, front and side view drawings including overall dimensions of each UPS system. Identify shipping splits (if applicable) and show areas where incoming conductors are to be terminated on the shop drawing submittals.

6. Internal wiring diagrams shall be provided for each power or control component. Each wiring diagram shall contain the following information as a minimum:

   a. A clear delineation between customer wiring and wiring furnished and installed by the UPS system vendor.

   b. Wiring identification and terminal numbers

c. Wire color codes (where applicable)

d. Location of interface via hard-wired dry contact (include contact ampere rating and voltage rating), analog signal wiring (where applicable), and digital system communication interface (for cases where RS-232 communications port is connected to the Process Control System).

7. System configuration with single line diagram.

8. Bill of material for each UPS system component. For the items such as that the following items are furnished as a minimum:

a. Bus materials of construction in the UPS panel board.

b. Type of main and branch circuit breaker used (bolt-on) in the UPS panelboard.

c. Interrupting ratings of each branch circuit and main circuit breaker used in the UPS panelboard.

d. Continuous ratings and quantities of each branch circuit device connected to the UPS panelboard.

e. Orientation of the phasing for the bus in the UPS panelboard

f. A list of all hardware items such as trims, doors, etc. for the UPS panelboard (where applicable).

g. A list of the transformer impedance, transformer circuit wiring, transformer voltages, full load secondary current, transformer wiring diagram and transformer connections.

h. A list of the transformer insulation and temperature rise data.

i. All information found on a standard transformer nameplate.

j. All electrical ratings associated with the rectifier and inverter.

k. All electrical ratings associated with the input circuit breaker (including interrupting rating, continuous current rating, and three phase voltage).

l. An identification schedule for all panel boards/transformers that reflects the specific identification number shown on the drawings (e.g., LP-1, PP-2, T-3, etc.)

m. Detailed calculations associated with the selection and the number of batteries to be provided with the UPS system based on the number of loads, there required current, and the proposed duty cycle.

n. Detailed calculations associated with the selection of the appropriate ventilation system for the UPS components enclosed in the cabinets.

o. Catalog cutsheets for the batteries to be supplied with the UPS system and appropriate ampere-hour information. In addition, the battery submittal shall include the electrical ratings for the DC circuit breaker and the battery rack. Include DC grounding and bonding details where appropriate.

p. All electrical ratings associated with the static bypass switch.

q. Descriptive data associated with monitoring, control, and communications functions described within this Specification.

9. Detailed discussion of correct connection of bonding conductors, equipment grounding conductors, and any connections made to the zero-sequence reference grid (if applicable as described in IEEE Standard 1100).

10. TVSS test submittal data as outlined in the input TVSS section listed below.

1.06 OPERATIONS AND MAINTENANCE MANUALS

A. The **ELECTRICAL SUBCONTRACTOR** shall submit operation and maintenance manuals in accordance with the procedures and requirements set forth in the General Conditions and Division 01. The manuals shall include:

1. Instruction books and/or leaflets.

2. Recommended spare parts list.

3. Final as-built construction drawings included in the shop drawings any changes made during the fabrication process.

4. Manuals shall include a functional description of the equipment, safety precautions, instructions, step-by step operating procedures and routine maintenance guidelines.

1.07 TOOLS, SUPPLIES AND SPARE PARTS

A. The UPS shall be furnished with all special tools necessary to disassemble, service, repair, and adjust the equipment and all spare parts as recommended by the equipment manufacturer. The **ELECTRICAL SUBCONTRACTOR** shall furnish the following minimum spare parts for each UPS system:

Number Required	Description
1 Set	Fuses of each size provided
1	Main Processor (if applicable)

Number Required	Description
1	Communications Interface (if applicable)

B. The spare parts shall be packed in containers suitable for long term storage, bearing labels clearly designating the contents and the pieces of equipment for which they are intended.

C. Spare parts shall be delivered at the same time as the equipment to which they pertain. The **ELECTRICAL SUBCONTRACTOR** shall properly store and safeguard such spare parts until completion of the Work, at which time they shall be delivered to the Owner.

D. Spare parts lists, included with the shop drawing submittal shall indicate specific sizes, quantities, and part numbers of the items to be furnished. Terms such as "1 lot of packing material" are not acceptable.

E. Parts shall be completely identified with a numerical system to facilitate parts inventory control and stocking. Each part shall be properly identified by a separate number. Those parts which are identical for more than one size, shall have the same parts number.

1.08 SERVICES OF MANUFACTURER'S REPRESENTATIVE

A. The **ELECTRICAL SUBCONTRACTOR** shall provide the services of a qualified manufacturer's technical representative who shall adequately supervise the installation and testing of all equipment furnished under this Contract and instruct the **ELECTRICAL SUBCONTRACTOR'S** personnel and the Owner's operating personnel in its maintenance and operation as outlined in Division 01 and Section 46 00 00 – Equipment General Provisions. The services of the manufacturer's representative shall be provided for a period of not less than as follows:

1. One trip of one (1) working day during installation of the equipment.

2. One trip of one (1) working day for the setting of the protective devices.

3. One trip of one (1) working day after acceptance of the equipment

4. One trip of one (1) working day during the warranty period.

B. Any additional time required to achieve successful installation and operation shall be at the expense of the **ELECTRICAL SUBCONTRACTOR**. The manufacturer's representative shall sign in and out at the office of the Engineer's Field Representative on each day he is at the project.

1.09 IDENTIFICATION

A. Each switchgear assembly shall be identified with the identification number indicated on the Drawings (e.g., UPS-1, UPS-2). A nameplate shall be securely affixed in a

conspicuous place on each switchgear assembly. Nameplates shall be as specified in Section 26 05 53 – Identification for Electrical Systems.

1.10 TRAINING

A. The **ELECTRICAL SUBCONTRACTOR** shall provide training for Owner personnel. Training shall be conducted by the manufacturer's factory trained specialists who shall instruct Owner personnel in operation and maintenance of all equipment provided under this Section. Training shall be in accordance with the requirements of Section 46 00 00 – Equipment General Provisions.

B. Maintenance training courses for customer employees shall be available by the UPS manufacturer. This training is in addition to the basic operator training conducted as a part of the system start-up.

C. The training course shall cover UPS theory, location of subassemblies, safety, battery considerations and UPS operational procedures. The course shall include AC to DC conversion and DC to AC inversion techniques as well as control, metering, and feedback circuits to the Printed Circuit Board (PCB) level. Troubleshooting and fault isolation using alarm information and internal self-diagnostics should be stressed

D. Note that any training received during installation or start-up is considered incidental training and will not be counted as part of formal training.

PART 2 – PRODUCTS

2.01 MANUFACTURERS

A. The equipment covered by these specifications is intended to be standard equipment of proven performance as manufactured by reputable concerns. Equipment shall be designed, constructed and installed in accordance with the best practices of the trade, and shall operate satisfactorily when installed as shown on the Drawings. A minimum of 5 years of documented experience in UPS system design is required.

B. It is the intent of these specifications that the UPS package be produced by a single manufacturer who shall be responsible for matching all components and providing equipment which functions together as a system.

C. The UPS package shall be Series 600T as manufactured by Liebert, Exide equivalent or Chloride equivalent.

2.02 UPS MODULE

A. Voltage

1. Input/output voltage specifications of the UPS shall be:

a. Input: 240/120 volts, single-phase, 2-hot wires-plus-ground.

b. Output: 240/120 volts, single-phase, 2-hot wires-plus-ground.

B. Output Load Capacity:

1. Specified output load capacity of the UPS shall be 20 kVA at 0.8 lagging power factor.

2.03 MATCHING BATTERY CABINET

A. Battery Cells: Sealed, lead-acid, valve-regulated.

B. Reserve Time: 10 minutes at full load, 0.8 power factor, with ambient temperature between 20° and 30° C.

C. Recharge Time: to 95% capacity within ten (10) times discharge time.

2.04 MODES OF OPERATION

A. The UPS shall be designed to operate as an on-line reverse transfer system in the following modes:

1. Normal: The critical AC load is continuously supplied by the UPS inverter. The rectifier/charger derives power from a utility AC source and supplies DC power to the inverter while simultaneously float-charging a power reserve battery.

2. Emergency: Upon failure of utility AC power, the critical AC load is supplied by the inverter, which without any switching, obtains power from the battery. There shall be no interruption in power to the critical load upon failure or restoration of the utility AC source.

3. Recharge: Upon restoration of utility AC power, after a utility AC power outage, the rectifier/charger shall automatically restart, walk-in, and gradually assume the inverter and battery recharge loads.

4. Bypass: If the UPS must be taken out of service for maintenance or repair, or should the inverter overload capacity be exceeded, the static transfer switch shall perform a reverse transfer of the load from the inverter to the bypass source with no interruption in power to the critical AC load.

2.05 PERFORMANCE REQUIREMENTS

A. AC Inputs to UPS

1. Voltage Configuration: single phase, 2-hot wires plus ground.

2. Voltage Tolerance: + 10%, -25% of nominal..

3. Frequency: Nominal frequency +/- 5%.

4. Power Factor: 0.90 lagging minimum at nominal input voltage and full rated UPS output load.

5. Inrush Current: 800% of full load current maximum.

6. 125% of nominal AC input current maximum. 100% of nominal for optional generator operation.

7. Input Current Walk-In: 20 seconds to full rated input current maximum.

8. Current Distortion: 30% THD maximum at full load. An optional input filter shall be available to reduce input current distortion to 10% THD maximum at full load.

9. Surge Protection: Sustains input surges without damage per criteria listed in ANSI C62.41-1980.

B. AC Output, UPS Inverter

1. Voltage Configuration: three-phase, 4-wire plus ground.

2. Voltage Regulation:

   a. ±1% three-phase RMS average for a balanced three-phase load for the combined variation effects of input voltage, connected load, battery voltage, ambient temperature, and load power factor.

   b. ± 2% three-phase RMS average for a 50% unbalanced load for the combined variation effects of input voltage, connected load, battery voltage, ambient temperature, and load power factor.

3. Frequency: Nominal frequency +/- 0.1%.

4. Frequency Slew Rate: 1.0 Hertz per second maximum. Field selectable from 0.1 to 1.0 Hz per second.

5. Phase Displacement:

   a. ± 1 degree for balanced load.

   b. ± 3 degrees for 50% unbalanced load.

6. Bypass Line Sync Range: +/- 0.5 Hertz. Field selectable +/- 0.5, 1.0, 3.0, 5.0 Hz.

7. Voltage Distortion:

   a. 5% total harmonic distortion (THD) for linear loads.

   b. 3% maximum for any single harmonic.

8. Load Power Factor Range: 0.9 leading to 0.5 lagging.

9. Output Power Rating: Rated kVA at 0.8 lagging power factor.

10. Overload Capability:

    a. 125% for 10 minutes (without bypass source).

    b. 150% for 30 seconds (without bypass source).

11. Inverter Output Voltage Adjustment: +/- 5% manual adjustment.

12. Voltage Transient Response:

    a. 20% load step: +/- 4%

    b. 30% load step: +/- 5%

    c. 50% load step: +/- 8%

    d. Loss or return of AC input power: +/- 1%

    e. Manual transfer of 100% load: +/- 4%.

13. Transient Recovery Time: to within 1% of output voltage within 50 milliseconds.

14. Voltage Unbalance: balanced load to 20% unbalanced load +/- 1%, 50% unbalanced load +/-2%, 100% unbalanced load +/- 5%.

15. Fault Clearing: Sub-cycle current of at least 300%.

16. Electrical Efficiency: The unit shall be rated for an overall efficiency of 93% of full load (AC input to AC output efficiency). This efficiency shall include the reactive losses of all fans and auxiliaries.

2.06 ENVIRONMENTAL CONDITIONS

A. The UPS shall be able to withstand the following environmental conditions without damage or degradation of operating characteristics:

1. Operating Ambient Temperature:

    a. UPS Module: 32°F to 105°F (0°C to 40°C).

    b. Battery: 77 +/- 9°F (25 +/- 5°C).

B. Storage/Transport Ambient Temperature:

1. -4°F to 158°F (-20°C to 70°C).

C. Relative Humidity:

1. 0 to 95%, non-condensing.

D. Altitude:

1. Operating: to 6600 ft. (2,000 meters) above Mean Sea Level. Derated for higher altitude applications.

2. Storage/Transport: to 40,000 ft. (12,200 meters) above Mean Sea Level.

E. Audible Noise:

1. Noise generated by the UPS under any condition of normal operation shall not exceed 65 dBA measured 1 meter from surface of the UPS.

2.07 WARRANTY

A. The **ELECTRICAL SUBCONTRACTOR** shall warrant the UPS system against defects in materials and workmanship for 12 months after final acceptance.

2.08 MATERIALS

A. The maximum working voltage, current, and di/dt of all solid-state power components and electronic devices shall not exceed 75% of the ratings established by the UPS system supplier. The operating temperature of solid-state component sub-assembly shall not be greater than 75% of their ratings. Electrolytic capacitors shall be computer grade and be operated at no more than 95% of their voltage rating at the maximum rectifier charging voltage.

B. Wiring practices, materials and coding shall be in accordance with the requirements of the Massachusetts Electrical Code. All bolted connections of bus bars, lugs, and cables shall be in accordance with requirements of the Massachusetts Electrical Code and other applicable standards. All electrical power connections are to be torqued to the required value and marked with a visual indicator.

C. Provision shall be made for power cables to enter or leave from the top or bottom of the UPS cabinet.

2.09 CONSTRUCTION AND MOUNTING

A. The UPS unit, comprised of input autotransformer, rectifier/charger with input filter, inverter, static transfer switch, and maintenance bypass switch, shall be housed in a single free-standing NEMA type 1 enclosure. Cabinet doors/covers shall require a tool for gaining access. Casters and leveling feet shall be provided for ease of installation. Front access only shall be required for expedient servicing, adjustments, and installation. The UPS cabinet shall be structurally adequate and have provisions for hoisting, jacking, and forklift handling.

B. The UPS cabinet shall be cleaned, primed, and painted with the manufacturer's standard color. The UPS shall be constructed of replaceable subassemblies. Printed circuit assemblies shall be plug-in. Like assemblies and like components shall be interchangeable.

2.10 COOLING

A. Cooling of the UPS shall be by forced-air. Redundant fans shall be used. Low velocity fans shall be used to minimize audible noise output. Fan power shall be provided by the UPS output.

B. The thermal design, along with all thermal and ambient sensors, shall be coordinated with the protective devices before excessive component or internal cabinet temperatures are exceeded.

2.11 GROUNDING

A. The AC output neutral shall be electrically isolated from the UPS chassis. The UPS chassis shall have an equipment ground terminal. Provisions for local bonding shall be provided.

B. All components of the drive shall be bonded via some external visible copper connection sized for the ampacity of the transformer secondary current.

C. The transformer electrostatic shield shall have a connection to limit capacitive effects.

2.12 COMPONENTS

A. Transformer

1. An input transformer shall be included. The input autotransformer shall be factory installed inside the UPS module cabinet. 208/208 and 480/208 UPS module input/output voltage configurations shall be served by the same transformer through tap selection for additional system flexibility.

B. Rectifier

1. General - The term rectifier/charger shall denote the solid-state equipment and controls necessary to convert incoming AC power to regulated DC power for input to the inverter and for battery charging. The rectifier/charger shall be a phase-controlled, solid-state SCR type with constant voltage/current limiting control circuitry.

2. AC Input Current Limiting: The rectifier/charger unit shall be provided with AC input current limiting whereby the maximum input current shall be limited to 125% of the full input current rating. The rectifier/charger shall operate at a reduced current limit mode whenever the critical load is powered from the UPS static bypass circuit such that the maximum UPS input current will not exceed 125% of full load input

current. In addition, the rectifier/charger input current limit shall be automatically reduced to 25% of full load input current whenever the critical load is powered from the UPS internal maintenance bypass circuit. An optional second circuit shall limit input current to 100% of rated full load current when activated by a customer supplied contact closure to signal a customer function such as generator operation.

3. Input Current Walk-In: The rectifier/charger shall contain a timed walk-in circuit that causes the unit to gradually assume the load over a 20-second time interval after input voltage is applied.

4. Fuse Failure Protection: Power semiconductors in the rectifier/charger shall be fused with fast-acting fuses, so that loss of any one power semiconductor shall not cause cascading failures.

5. DC Filter: The rectifier/charger shall have an output filter to minimize ripple voltage into the battery. Under no conditions shall ripple voltage into the battery exceed 2% RMS. The filter shall be adequate to ensure that the DC output of the rectifier/charger will meet the input requirements of the inverter. The inverter shall be able to operate from the rectifier/charger with the battery disconnected.

6. Automatic Restart: Upon restoration of utility AC power, after a utility AC power outage and prior to a UPS automatic end-of-discharge shutdown, the rectifier/charger shall automatically restart, walk-in, and gradually assume the inverter and battery recharge loads. Upon restoration of utility AC power, after a utility AC power outage and after a full UPS automatic end-of-discharge shutdown, the UPS will (customer selectable) automatically restart, performing the normal UPS start up walk-in.

7. Battery Recharge: In addition to supplying power for the inverter load, the rectifier/charger shall be capable of producing battery charging current sufficient to replace 95% of the battery discharge power within ten (10) times the discharge time. After the battery is recharged, the rectifier/charger shall maintain the battery at full charge until the next emergency operation.

8. Overvoltage Protection: There shall be DC over-voltage protection so that if the DC voltage rises to the pre-set limit, the UPS is to shut down automatically and initiate an uninterrupted load transfer to the static bypass line.

C. Inverter

1. General: The term inverter shall denote the solid-state equipment and controls to convert DC power from the rectifier/charger or battery to regulated AC power for supporting the critical load. The inverter shall be a transistorized, phase-controlled, pulse width modulated (PWM) design capable of providing the specified AC output.

2. Overload Capability: The inverter shall be capable of supplying current and voltage for overloads exceeding 100% and up to 150% of full load current. A status indicator and audible alarm shall indicate overload operation. The UPS shall transfer the load to bypass when overload capacity is exceeded.

3. Fault Clearing and Current Limit: The inverter shall be capable of supplying an overload current of 150% of its full-load rating for thirty seconds. For greater currents or longer time duration, the inverter shall have electronic current-limiting protection to prevent damage to components. The inverter shall be self-protecting against any magnitude of connected output overload. Inverter control logic shall sense and disconnect the inverter from the critical AC load without the requirement to clear protective fuses.

4. Output Power Transformer: A dry type power transformer shall be provided for the inverter AC output. It shall have copper wiring exclusively. The transformers hottest spot winding temperature shall not exceed the temperature limit of the transformer insulation class of material when operating at full load at maximum ambient temperature.

5. Phase Balance: Electronic controls shall be provided to regulate each phase so that an unbalance loading will not cause the output voltage to go outside the specified voltage unbalance or phase displacement.

6. Fuse Failure Protection: Power semiconductors in the inverter unit shall be fused with fast-acting fuses, so that loss of any one power semiconductor will not cause cascading failures.

7. Inverter Shutdown: For rapid removal of the inverter from the critical load, the inverter control electronics shall instantaneously turn off the inverter transistors. Simultaneously, the static transfer switch shall be turned on to maintain continuous power to the critical load.

8. Inverter DC Protection: The inverter shall be protected by the following disconnect levels:

    a. DC Overvoltage Shutdown

    b. DC Undervoltage Warning (Low Battery Reserve), user adjustable from 1 to 99 minutes

    c. DC Undervoltage Shutdown (End of Discharge)

9. Overdischarge Protection: To prevent battery damage from overdischarging, the UPS control logic shall automatically raise the shutdown voltage set point as discharge time increases beyond fifteen (15) minutes.

10. Inverter Output Voltage Adjustment: The inverter shall use a manual control to adjust the output voltage from +/- 5% of the nominal value.

11. Output Frequency: The output frequency of the inverter shall be controlled by an oscillator. The oscillator shall be temperature compensated and hold the inverter output frequency to +/- 0.1% for steady state and transient conditions. Drift shall not exceed 0.1% during a 24-hour period. Total frequency deviation, including short time fluctuations and drift, shall not exceed 0.1% from the rated frequency.

D. Display and Controls

1. Monitoring and Control: The UPS shall be provided with a microprocessor-based unit status display and controls section. A system power flow diagram shall be provided as part of the monitoring and controls sections which depicts a single-line diagram of the UPS. Illuminated visual indicators shall be of the long-life light-emitting diode (LED) type. All of the operator controls and monitors shall be located on the front of the UPS cabinet. The monitoring functions such as metering, status and alarms shall be displayed on an alphanumeric LCD display.

2. Metering: The UPS shall be capable of metering the electrical parameters for the AC input, AC output, battery and charger/rectifier sections of the UPS system.

3. Alarm Messages: The UPS shall be capable of alarming the electrical and mechanical parameters for the AC input, AC output, and charger/rectifier and battery sections of the UPS system.

4. Status Messages: The UPS shall be capable of displaying the following messages (at a minimum):

    a. Normal Operation

    b. Load on Maintenance Bypass

    c. Load on UPS

    d. Load on static bypass

    e. System shutdown

    f. UPS on battery

5. Controls: UPS start-up, shutdown, and maintenance bypass operations shall be accomplished by a single rotary control switch. An advisory display and menu-driven user prompts shall be provided to guide the operator through system operation without the use of additional manuals. Pushbuttons shall be provided to display the status of the UPS and to test and reset visual and audible alarms.

6. Power Status Diagram: A mimic panel shall be provided to depict a single line diagram of the UPS. Indicating lights shall be integrated within the single line diagram to illustrate the status of the UPS. The diagram shall be color coded with

the positions of the rotary control switch for visual confirmation of the UPS operating mode.

7. On-Line Battery Test: The UPS shall be capable of performing tests on the batteries to check for open cell, shorted cell, and deteriorated cell conditions. The unit shall also be capable of performing a continuous battery test.

E. Static Transfer Switch

1. General: A static transfer switch and bypass circuit shall be provided as an integral part of the UPS. The static switch shall be a naturally commutated high-speed static (SCR-type) device rated to conduct full load current continuously. The switch shall have an overload rating of 125% rated load continuously, 200% rated load for thirty seconds, and 2000% rated load for two cycles. The static transfer switch control logic shall contain an automatic transfer control circuit that senses the status of the inverter logic signals and operating and alarm conditions. This control circuit shall provide an uninterrupted transfer of the load to an alternate bypass source, without exceeding the transient limits specified herein, when an overload or malfunction occurs within the UPS, or for bypassing the UPS for maintenance.

2. Uninterrupted Transfer: The transfer control logic shall automatically turn on the static transfer switch, transferring the critical AC load to the bypass source, after the transfer logic senses any of the following conditions:

   a. Inverter overload capacity exceeded

   b. Critical AC load overvoltage or undervoltage

   c. Battery protection period expired

   d. UPS fault condition

3. The transfer control logic shall inhibit an automatic transfer of the critical load to the bypass source if any of the following conditions are present:

   a. Inverter/bypass voltage difference exceeding preset limits

   b. Bypass frequency out of limits

   c. Bypass out-of-synchronization range with inverter output

4. Uninterrupted Retransfer: Retransfer of the critical AC load from the bypass source to the inverter output shall be automatically initiated unless inhibited by manual control. The transfer control logic shall inhibit an automatic retransfer of the critical load to the inverter if one of the following conditions exists:

   a. Bypass out of synchronization range with inverter output

   b. Inverter/bypass voltage difference exceeding preset limits

c. Overload condition exists in excess of inverter full load rating

d. UPS fault condition present

F. Maintenance Bypass Switch

1. General: A manually operated maintenance bypass switch shall be incorporated into the UPS to directly connect the critical load to the input AC power source, bypassing the rectifier/charger, inverter, and static transfer switch.

2. Isolation: All energized terminals shall be shielded to ensure that maintenance personnel do not inadvertently come in contact with energized parts or terminals. A means to de-energize the static switch shall be provided when the UPS is in the maintenance bypass mode of operation.

3. Maintenance Capability: With the critical load powered from the maintenance bypass circuit, it shall be possible to check out the operation of the rectifier/charger, inverter, battery, and static transfer switch.

G. Battery Power Pack

1. The battery power pack shall include sealed, lead-acid valve regulated battery cells housed in a separate cabinet that matches the UPS cabinet styling to form an integral system line-up. Battery cells shall be mounted on slide-out trays for ease of maintenance. A disconnect means shall be included for isolation of the battery pack from the UPS module. Casters and leveling feet shall also be provided with the battery power pack cabinet for ease of installation.

H. Optional Input Filter

1. The rectifier/charger shall include an input filter to reduce reflected input current distortion to 10% THD at full load with nominal input voltage. Another benefit of the input filter shall be to maintain the input power factor at 0.90 lagging minimum from full load to half load with nominal input voltage.

I. Input Section Transient Voltage Surge Suppression

1. General Requirements: The TVSS shall be suitable for category B3 environments as described in ANSI/IEEE C62.41. The TVSS shall be of parallel design and provide protection for:

a. Line to Line

b. Line to Ground

c. Neutral to Ground

d. Line to Line

2. Performance Standards:

   a. UL compliance and labeling: Listed per UL 1449

   b. ANSI/IEEE: Comply with ANSI/IEEE C62.45 test procedures for Category B3 established in C62.41. The unit will be subjected to a 8 x 20usec 10kA short circuit current (category C3) with a 1.2 x 50usec 20kV open circuit voltage at 1 minute intervals without suffering either performance degradation or more than 10% deviation of clamping voltage at a specified surge current.

   c. MEC Compliance: Comply with MEC Article 280 for installation

   d. NEMA Compliance: Provide written documentation for test results as required by testing per standard LS-1 to verify that TVSS components will perform as intended.

3. Electrical Ratings

   a. System operating voltage shall be: (277/480) Volts AC- 3 Phase, 4 Wire, plus ground.

   b. Current rating: The continuous current rating shall be at least [(30) (60) (100) (225)] RMS amperes under all specified conditions.

   c. Noise Attenuation: The system shall provide noise attenuation to electrical line noise to 60dB in the normal mode and 40dB in the common mode, through the use of series chokes or parallel capacitors in all phase and neutral conductors. The system shall meet the qualifications of UL 1283 as a EMI/RFI noise filter.

   d. AIC ratings: All series connected shall have 10kA RMS AIC rating

   e. Maximum Continuous Overvoltage (MCOV):

Voltage	**MCOV**
277V	320V
480V	640V

   f. Clamping Voltage (277/480VAC)

Mode of Clamping	**B3 Ringwave**
L-N	475V
L-G	825V

Mode of Clamping	B3 Ringwave
N-G	625
L-L	700

4. Manufacturers

   a. Manufacturer shall have at least 5 years of documented experience in the manufacture of TVSS devices.

   b. The TVSS shall be Current Technology, TG80 Series.

J. Panelboards

1. General

   a. The panelboards shall be dead-front type with automatic trip-free, non-adjustable, thermal-overload, branch circuit breakers. Panelboards shall be of the configuration and rating as specified herein and indicated on the Drawings.

   b. The panelboards shall be equipped with a main breaker or main lugs complete with branch circuit breakers, as shown on the Drawings. The panelboards shall be enclosed in a cabinet suitable for flush or surface mounting.

   c. Panelboards shall be fully rated and shall have a short circuit rating of 22,000 amperes symmetrical, minimum. In the event the results of the **ELECTRICAL SUBCONTRACTOR'S** short circuit fault analysis, as accepted by the Engineer, indicate that a higher short circuit rating of the panelboards is required, furnish complete panelboards with that higher rating.

   d. Electronic grade panelboards shall be Cutler-Hammer/Westinghouse Electric Corporation Pow-R-Line Series, Square-D Company equivalent, General Electric Company equivalent, or equal.

2. Cabinets

   a. The cabinet shall be NEMA 12 (minimum) constructed of No. 12 U.S.S. code gauge galvanized steel. The door shall be fastened to the cabinet with concealed brass hinges and shall be equipped with flush-type catches and locks. All locks shall be keyed alike. The cabinet shall have wiring gutters on sides and shall be at least 5-3/4 inches deep. The **ELECTRICAL SUBCONTRACTOR** shall provide an engraved nameplate for the panelboard. The nameplate shall include the panelboard designation, voltage, phase, wires, and bus rating.

b. An Underwriter's Laboratories, Inc. inspection label shall appear on the interior of the cabinet.

3. Bus Work

a. Main bus bars shall be of ample size so that a current density of not more than 1000 amperes per square inch of cross section will be attained. This current density shall be based on the application of the full load connected to the panel plus approximately 25% of the full load for spare capacity. The main bus shall be full capacity as based on the preceding for the entire length of the panel so as to provide full flexibility of circuit arrangement.

b. Solid neutral bus bars are required. Ratings shall be in accordance with applicable standards.

c. A separate ground bus shall be provided with lugs for termination of equipment grounding conductors.

d. Branch bus work shall be rated to match the maximum branch circuit breaker which may be installed in the standard space.

e. All bus shall be [tin] [silver] plated copper.

4. Circuit Breakers

a. Circuit breakers shall be bolt-on, molded-case type conforming to NEMA Standard AB 1. Trip elements of circuit breakers shall be 20A unless otherwise shown on the Contract Drawings. Minimum branch circuit breaker shall be 100A frame for 60A and above except where shown otherwise on the Drawings or where a larger frame size is standard for the continuous current rating required. Breakers shall have an interrupting rating of 22,000 amperes symmetrical at 240 VAC, minimum. All breakers shall have quick-make, quick-break, toggle mechanism for manual as well as automatic operation. Tandem or half-size breakers are not acceptable.

b. Where indicated, or where required by Code, circuit breakers for receptacle circuits shall be equipped with integrally mounted ground fault interrupters complete with "TEST" push button and shall be of a type which fit standard panelboard spaces for the breaker continuous current rating required.

c. Instrument power panel branch circuit breakers set for control instrumentation, telephone, fire alarm, or auxiliary equipment circuits requiring continuous operation shall be provided with a lock-on device. Circuit breakers used for lighting circuit switching shall be approved for the purpose and shall be marked "SWD". Where required by Article 440 of the MEC, circuit breakers installed for air conditioning units shall be HACR type.

5. Directories

a. Approved directories with glass or noncombustible plastic cover, and with typewritten designations of each branch circuit, shall be furnished and installed in each panelboard. The **ELECTRICAL SUBCONTRACTOR** shall maintain in each panel, during the duration of the Contract, a handwritten directory clearly indicating the circuit breakers in service. This directory shall be updated as work progresses, and final, typewritten directories, as specified above, shall be installed at the end of the project. Designations and circuit locations shall conform with the panelboard schedules on the Drawings, except as otherwise authorized by the Engineer.

b. The **ELECTRICAL SUBCONTRACTOR** shall provide directories identifying panelboards and indicating the size of the feeder (cable and conduit) serving the panel, circuit numbers, and a description of associated branch circuits including branch circuit trip and connected load for each circuit.

K. Remote Contact Board

1. Isolated Form C contacts (rated for YYY amps at ZZZ volts) shall be provided to indicate a change of status of each of the following conditions:

a. UPS on battery alarm

b. Low battery reserve alarm

c. Load on bypass alarm

d. Summary alarm

L. Optional Remote Status Panel: A remote status panel shall be provided and shall include the following:

1. Load on UPS LED

2. Load On Bypass LED

3. Battery Discharge LED

4. Low Battery Reserve LED

5. UPS Alarm Condition LED

6. New Alarm Condition LED (for a second UPS alarm condition)

7. Audible Alarm with Reset pushbutton

8. Lamp Test/Reset pushbutton

9. Primary/Reserve Fail

10. The remote status panel shall be provided in a NEMA Type 1 enclosure for wall mounting.

M. RS-232C Interface Port

1. An RS-232C interface port shall be provided for remote display of UPS status information at a computer terminal (by others). The UPS via the RS-232C port will support an Enhanced Terminal interface feature. The UPS will "draw" a picture of its own display panel on the remote terminal screen. The UPS will treat the terminal as if it were the front panel LCD display and pushbuttons, enabling the remote user to view screens, set any modifiable values, turn the load on or off, or otherwise be able to perform any functions possible through the normal front panel display.

2. The vendor will provide all software and drives required to run the monitoring and control features.

N. Battery Circuit Breaker

1. A battery circuit breaker shall be provided to isolate the battery from the UPS. This breaker shall have an undervoltage release (UVR) and auxiliary contacts, and shall be in a separate wall mounted NEMA-1 enclosure. The battery breaker provides a manual disconnecting means, short circuit protection, and overcurrent protection for the battery system. When opened, there shall be no battery voltage in the UPS enclosure. The UPS shall be automatically disconnected from the battery by opening the breaker when the battery reaches the minimum discharge voltage level.

O. External Maintenance Bypass

1. A matching bypass cabinet shall be provided to enable the UPS module to be completely isolated from the electrical system while the critical load is powered through the external maintenance bypass line.

2. The cabinet shall be configured for make-before-break operation for transfer to and from the maintenance bypass line with a single rotary switch.

3. The static switch will be configured with:

   a. Auxiliary contacts

   b. Input circuit breaker

   c. Output (load) circuit breaker

   d. Isolation transformer (as described above)

PART 3 – EXECUTION

3.01 INSTALLATION

A. The UPS shall be furnished and installed as shown on the Drawings and in accordance with the manufacturer's installation instructions. One (1) copy of these instructions shall be included with the equipment at the time of shipment. The equipment shall be suitably protected from any moisture, excessive heat or cold per the environmental limits listed in this specification until accepted by the Owner.

B. Furnish and install appropriate structural mounting in accordance with the manufacturer's recommendations.

C. The following test and inspection procedures will be followed during start-up:

1. Visual Inspection

    a. Inspect equipment for signs of damage

    b. Verify installation per drawings

    c. Inspect cabinets for foreign objects

    d. Verify neutral and ground conductors are properly sized and configured

    e. Inspect battery cases

    f. Inspect battery for proper polarity

    g. Verify all printed circuit boards are configured properly

    h. Verify that proper versions of software have been furnished for diagnostics and external communications.

2. Mechanical Inspection

    a. Check all control wiring connections for tightness

    b. Check all power wiring connections for tightness

    c. Check all terminal screws, nuts, and/or spade lugs for tightness

3. Electrical Inspection

    a. Check all fuses for continuity

    b. Confirm input voltage and phase rotation is correct

    c. Verify control transformer connections are correct for voltages being used

d. Assure connection and voltage of the battery string(s)

3.02 UNIT START-UP AND SITE TESTING

A. Site testing shall be provided by the manufacturer's field service personnel if requested. Site testing shall consist of a complete test of the UPS system and the associated accessories supplied by the manufacturer. A full load power test including a partial battery discharge test shall be provided as part of the standard start-up procedure. This shall be accomplished without disturbing user wiring and completed prior to operation of the site critical load from the UPS output. The test results shall be documented, signed, and dated for future reference.

3.03 MANUFACTURER'S FIELD SERVICE

A. The UPS manufacturer shall directly employ a nationwide service organization, consisting of factory trained field service personnel dedicated to the start-up, maintenance, and repair of UPS and power equipment. The organization shall consist of regional and local offices.

3.04 FIELD ADJUSTMENTS

A. The UPS manufacturer will furnish a set of all software and hardware parameter setting to the Engineer prior to final acceptance.

B. Where applicable, field service personnel shall delineate between those settings that and field adjustable versus those settings that are custom set based on load characteristics, the type of UPS, etc.

3.05 MANUFACTURER'S CERTIFICATION

A. A qualified, factory trained manufacturer's representative shall certify in writing that the equipment has been installed, adjusted, and tested in accordance with the manufacturer's recommendations.

END OF SECTION

NO TEXT ON THIS PAGE

ATTACHMENT AT – 26 36 13 MANUAL TRANSFER SWITCHES

DIVISION 26

ELECTRICAL

(FILED SUB BID REQUIRED)

SECTION 26 36 13
MANUAL TRANSFER SWITCH[1]

PART 1 – GENERAL

1.01 FILED SUB-BID REQUIREMENTS

A. This Section is part of the filed sub-bid for Division 26 – Electrical. See Section 26 05 00.

1.02 THE REQUIREMENT

A. The **ELECTRICAL SUBCONTRACTOR** shall furnish, install, connect, test and place in satisfactory operation manual transfer switches as specified herein and indicated on the Drawings.

B. The transfer switches shall be assembled using NEMA rated components. Components designed and built to International Electrotechnical Commission (IEC) standards are not recognized. Equipment designed, manufactured and labeled in compliance with IEC standards is not acceptable.

C. Reference Section 26 05 00 – Basic Electrical Requirements; Section 26 05 53 – Identification for Electrical Systems, and Section 26 09 16 – Electric Controls and Relays.

1.03 CODES AND STANDARDS

A. Manual transfer switches and their components shall be designed, manufactured, and/or listed to the following standards as applicable:

1. Underwriters Laboratories

   a. UL 489 – Molded Case Circuit Breakers, Molded Case Switches, and Circuit Breaker Enclosures

   b. UL 508 – Standard for Industrial Control Equipment

   c. UL 1008 – Transfer Switch Equipment

   d. UL 1691 – Single Pole Locking-Type Separable Connectors

---

1 Addendum No. 5

1.04 SUBMITTALS

A. In accordance with the procedures and requirements set forth in the General Conditions and Section 01 30 00 – Submittal Procedures, the **ELECTRICAL SUBCONTRACTOR** shall obtain from the equipment manufacturer and submit the following:

1. Shop Drawings

2. Operation and Maintenance Manuals

3. Spare Parts Lists

4. Reports of Certified Shop Tests

B. Each submittal shall be identified by the applicable Specification Section.

1.05 SHOP DRAWINGS

A. Each submittal shall be complete in all respects, incorporating all information and data listed herein and all additional information required for evaluation of the proposed equipment's compliance with the Contract Documents.

B. Partial, incomplete or illegible submittals will be returned to the **ELECTRICAL SUBCONTRACTOR** for resubmittal without review.

C. Shop drawings for each manual transfer switch shall include but not be limited to:

1. A Compliance, Deviations, and Exceptions (CD&E) letter. If the shop drawings are submitted without this CD&E letter, the submittal will be rejected. The letter shall include all comments, deviations and exceptions taken to the Drawings and Specifications by the **ELECTRICAL SUBCONTRACTOR** AND Equipment Manufacturer/Supplier. This letter shall include a copy of this Specification Section. In the left margin beside each and every paragraph/item, a letter "C", "D", or "E" shall be typed or written in. The letter "C" shall be for full compliance with the requirement. The letter "D" shall be for a deviation from the requirement. The letter "E" shall be for taking exception to a requirement. Any requirements with the letter "D" or "E" beside them shall be provided with a full typewritten explanation of the deviation/exception. Handwritten explanation of the deviations/exceptions is not acceptable. The CD&E letter shall also address deviations, and exceptions taken to each Drawing related to this Specification Section.

2. Product data sheets.

3. Complete assembly, layout, and installation drawings with clearly marked dimensions and conduit entrance locations.

4. Example equipment nameplate data sheet.

5. Spare parts list.

041119

6. Complete internal schematic and interconnecting wiring diagrams.

7. Manufacturer's installation instructions.

8. Manufacturer's written warranty statement.

D. The shop drawing information shall be complete and organized in such a way that the Engineer can determine if the requirements of these specifications are being met. Copies of technical bulletins, technical data sheets from "soft-cover" catalogs, and similar information which is "highlighted" or somehow identifies the specific equipment items the **ELECTRICAL SUBCONTRACTOR** intends to provide are acceptable and shall be submitted.

E. Prior to completion and final acceptance of the project, the **ELECTRICAL SUBCONTRACTOR** shall furnish and install "as-built" wiring diagrams for each transfer switch. These final drawings shall be plastic laminated and securely placed inside each transfer switch and included in the O&M manuals.

1.06 OPERATION AND MAINTENANCE MANUALS

A. The **ELECTRICAL SUBCONTRACTOR** shall submit operation and maintenance manuals in accordance with the procedures and requirements set forth in the General Conditions and Division 01. The manuals shall include:

1. Instruction books and/or leaflets.

2. Recommended spare parts list.

3. Final as-built construction drawings included in the shop drawings incorporating all changes made in the manufacturing process and during installation.

1.07 SPARE PARTS

A. All spare parts as recommended by the equipment manufacturer shall be furnished to the Owner by the **ELECTRICAL SUBCONTRACTOR**. The following additional spare parts shall be furnished:

1. A minimum of one (1) set of fuses of each size provided.

B. The spare parts shall be packed in containers suitable for long term storage, bearing labels clearly designating the contents and the pieces of equipment for which they are intended.

C. Spare parts shall be delivered at the same time as the equipment to which they pertain. The **ELECTRICAL SUBCONTRACTOR** shall properly store and safeguard such spare parts until completion of the work, at which time they shall be delivered to the Owner.

D. Spare parts lists, included with the shop drawing submittal, shall indicate specific sizes, quantities, and part numbers of the items to be furnished. Terms such as "1 lot of packing material" are not acceptable.

E. Parts shall be completely identified with a numerical system to facilitate parts inventory control and stocking. Each part shall be properly identified by a separate number. Those parts which are identical for more than one size, shall have the same parts number.

1.08 IDENTIFICATION

A. Each transfer switch shall be identified with the identification number indicated on the Drawings (e.g. MTS-XXXX, etc.). A nameplate shall be securely affixed in a conspicuous place on each switch. Each operating handle shall also be identified with the name of the source that it switches (e.g. “UTILITY SOURCE” or “PORTABLE GENERATOR”). Nameplates shall be as specified in Section 26 05 53 – Identification for Electrical Systems.

1.09 WARRANTY

A. The manufacturer's and **ELECTRICAL SUBCONTRACTOR’S** warranty shall in no event be for a period of less than two (2) years from date of delivery of equipment to the project site and shall include repair labor, travel expense necessary for repairs at the jobsite, and expendables used during the course of repair.

PART 2 – PRODUCTS

2.01 MANUFACTURERS

A. The equipment covered by this Specification is intended to be standard equipment of proven performance as manufactured by reputable concerns. Equipment shall be designed, constructed and installed in accordance with the best practices of the trade, and shall operate satisfactorily when installed as shown on the Drawings.

B. The equipment described herein, as a minimum, shall meet all of the requirements specified in this Section and shall be a product of a manufacturer who has produced manual transfer switches for a period of at least three (3) years. The equipment shall be compatible with the loads to be served. Assembly of the switches by a 3rd party fabricator is not acceptable.

C. The manual transfer switch shall be ASCO 7000 Series as manufactured by Schneider Electric, Magnum Series as manufactured by Eaton, StormSwitch Series as manufactured by ESL Power Systems Inc. or Engineer approved equal.

2.02 MANUAL TRANSFER SWITCH

A. General

1. The transfer switches shall be Listed by Underwriters Laboratories, Inc. to standard UL-1008, with a minimum short circuit current rating as indicated on the Drawings. The equipment shall be capable of withstanding the fault current available at its line terminals. Switches shall have voltage ratings, ampere ratings and number of poles as indicated on the Drawings and shall be suitable for 60Hz operation. Transfer switches shall be marked for use on service entrances where indicated on the Drawings.

2. The switching shall be accomplished with molded-case circuit breakers for each source, which are mechanically interlocked together to prevent interconnection of the sources. Each switching device shall be UL 489 Listed and shall be rated for no less than the ampacity of the transfer switch. The switching devices shall be provided with lockable operating handles that can only be operated with the transfer switch enclosure main access door closed.

3. Power distribution terminal blocks shall be factory wired to the transfer switch for termination of the ungrounded normal source and load side field wiring. The ampacity and configuration of the power distribution terminal blocks shall be as required to coordinate with the size and quantity of conductors shown on the Drawings.

4. A ground terminal block shall be provided in the ampacity and configuration as required to coordinate with the size and quantity of conductors shown on the Drawings. The ground terminal block shall be bonded to the transfer switch enclosure.

5. All factory-installed wiring shall be sized to suit the application and have color coded insulation in accordance with the color scheme specified herein for the alternate source connectors.

B. Enclosure

1. Enclosures shall be furnished with the following enclosure type and material of construction, dependent upon the designation of the area in which they are to be installed. Area designations are indicated on the Drawings.

AREA DESIGNATION	ENCLOSURE TYPE AND MATERIAL
Indoor Wet Process Area	NEMA 3RX, Type 304 Stainless Steel
Indoor Dry Process Area	NEMA 3R, Painted Galvanized Steel
Indoor Dry Non-Process Area	NEMA 3R, Painted Galvanized Steel
Indoor Type 1 Chemical Storage/Transfer Area	NEMA 3R, Painted Galvanized Steel
Indoor Type 2 Chemical Storage/Transfer Area	NEMA 3R, Painted Galvanized Steel
All Outdoor Areas	NEMA 3RX, Type 304 Stainless Steel

2. Enclosures shall have provisions for top, bottom, and side conduit entry, and shall meet or exceed the UL-1008 minimum wire bending space requirements for all conduit entry points.

3. Enclosures shall have a lockable hinged main access door which opens to reveal a hinged dead-front panel that covers all energized electrical parts inside. The main access door shall be interlocked such that it cannot be opened when the transfer switch operating handles are set to the alternate source position. The main access door shall also have a lockable hinged cover over the transfer switch operating handles to prevent un-authorized operation of the transfer switch.

4. Enclosures shall have a bottom-mounted hinged flap door to cover the alternate source cable openings when cables are not connected. The hinged flap door shall allow alternate source cable entry only after the main access door has been opened.

C. Alternate Source Connection Point

1. The alternate source connection point shall be factory installed on the dead-front panel within the transfer switch enclosure and shall be factory wired to the transfer switch.

2. The alternate source connection point hardware shall be single-pole separable cam-style male connectors that are rated for no less than 200A at the required transfer switch voltage. Higher ampacity connectors or multiple parallel connectors shall be provided as required to match the rated ampacity of the transfer switch. Connectors shall be UL 1691 Listed, shall be color-coded, and shall be provided for each phase, neutral (if required), and ground as follows:

a. 480/277V AC Power

1) Phase A – BROWN

2) Phase B – ORANGE

3) Phase C – YELLOW

4) Neutral – GREY

5) Ground – GREEN

b. 120/208V or 120/240V AC Power

1) Phase A – BLACK

2) Phase B – RED

3) Phase C – BLUE

4) Neutral – WHITE

5) Ground – GREEN

3. Where a 3-pole, 4-wire transfer switch is indicated on the Drawings, neutral connector(s) shall be factory wired to a power distribution terminal block inside the transfer switch enclosure. Where a 4-pole, 4-wire transfer switch is indicated on the Drawing, neutral connector(s) shall be factory wired to the 4th pole of the transfer switch.

4. The ground connector(s) shall be factory wired to the ground terminal block.

D. Controls and Accessories

1. Control wiring shall be No. 14 AWG (minimum) with type MTW insulation rated for 105 degrees C.

2. Terminal blocks, relays, pilot devices, and other control devices and accessories shall be in accordance with Section 26 09 16 – Electric Controls and Relays.

3. Transfer switches shall be furnished with a normal source phase monitoring relay for detection and local/remote indication of normal source availability. The phase monitoring relay shall be rated for the transfer switch voltage and number of phases. The relay shall be UL 508 Listed and shall continuously monitor for phase loss, undervoltage, and phase reversal conditions on the incoming normal source. The relay shall dropout (deenergize) upon detecting a phase reversal, phase loss, or undervoltage condition. The undervoltage function shall be field-adjustable and shall be initially configured to dropout at 90% of rated voltage. The relay shall include an LED indicator light for indication of normal source conditions (i.e. “source available”) and shall automatically reset upon restoration of normal source conditions. The relay shall include double-pole double-throw (DPDT) output contacts rated for 10A (resistive) at 240VAC, minimum. Output contacts shall be factory wired to a terminal strip for connection of field wiring.

4. The normal and alternate source switching devices shall be furnished with auxiliary contacts for remote indication of open/close status. Auxiliary contacts shall be single-pole double-throw (SPDT) rated for 15A (resistive) at 120VAC, and shall be factory wired to a terminal strip for connection of field wiring.

5. Transfer switches shall be furnished with an accessory terminal strip for field wiring of alternate source signals as follows:

a. Generator run status contact.

b. Generator failure/fault contact.

6. Indicator light(s) shall be mounted on the enclosure to indicate:

    a. Utility source availability.

PART 3 – EXECUTION

3.01 INSTALLATION

A. Each transfer switch shall be installed as shown on the Drawings and in accordance with the manufacturer's installation instructions.

B. The transfer switch shall be provided with adequate lifting hardware for installation of enclosures.

C. The **ELECTRICAL SUBCONTRACTOR** shall tighten all assembled bolted connections to the manufacturer's torque recommendations prior to energizing.

D. Install each switch to allow complete door swing required for component removal.

E. The **ELECTRICAL SUBCONTRACTOR** shall coordinate conduit/wire entry into the enclosure with the manufacturer. Where located outdoors, conduits shall not enter the top of the enclosure.

3.02 TESTING

A. All tests shall be performed in accordance with the requirements of the General Conditions and Division 01. The following tests are required:

1. Witnessed Shop Tests

    a. None.

2. Certified Shop Tests and Reports

    a. Transfer switches shall be given routine factory tests. The factory tests shall demonstrate that the completed switches function correctly and meet applicable UL-1008 performance requirements.

    b. Manufacturer shall submit certified test reports.

3. Field Tests

    a. Field testing shall be done in accordance with the requirements specified in the General Conditions, Division 01, and Reference Section 26 05 00 – Basic Electrical Requirements.

b. With the transfer switch dead-front in place and the main access door closed and properly latched, actuate both operator mechanisms; verify only one operator at a time can be turned to the “ON” position.

c. All other field tests as recommended by the transfer switch manufacturer shall be performed.

d. Prior to acceptance of the installation, perform a functional test of the equipment with all available load, getting as close as possible to transfer switch's ampacity rating. The **ELECTRICAL SUBCONTRACTOR** shall furnish a 500kW generator and all necessary fuel and accessories for this test]. Correct defects which become evident during this test. Functional testing shall be as follows:

e. Transfer loads from normal source to alternate source, and remain supplied by the alternate source for two (2) hours.

f. Transfer loads back from alternate source to normal source, and keep alternate source available for two (2) additional hours.

END OF SECTION

NO TEXT ON THIS PAGE

ATTACHMENT AU – 26 36 23 – AUTOMATIC TRANSFER SWITCHES

DIVISION 26

ELECTRICAL

(FILED SUB BID REQUIRED)

SECTION 26 36 23

AUTOMATIC TRANSFER SWITCHES[1]

PART 1 – GENERAL

1.01 FILED SUB-BID REQUIREMENTS

A. This Section is part of the filed sub-bid for Division 26 – Electrical. See Section 26 05 00.

1.02 THE REQUIREMENT

A. The **ELECTRICAL SUBCONTRACTOR** shall furnish, install, connect, test and place in satisfactory operation automatic transfer switches as specified herein and indicated in Drawings.

B. All devices and components of the automatic transfer switch shall be NEMA rated. IEC rated devices are unacceptable and shall be cause for rejection of the submittals/equipment.

1.03 TESTING

A. All tests shall be performed in accordance with the requirements of the General Conditions and Division 01. The following tests are required:

1. Witnessed Shop Tests

   a. Shall be made available at manufacturing facilities if requested.

2. Certified Shop Tests and Reports

   a. Automatic transfer switches shall be given routine factory tests. The factory tests shall demonstrate that the completed switches function correctly and that the required timing has been set. Certification of these settings shall be submitted to the Engineer upon request.

   b. Test procedures shall be in accordance with UL-1008. During the 3-cycle withstand tests, there shall be no contact welding or damage.

011805

1 Addendum No. 5

c. The three cycle tests shall be performed without the use of current limiting fuses.

d. Oscillograph traces across the main contacts shall verify that contact separation has not occurred and there is contact continuity across all phases after completion of the test.

e. When conducting temperature rise tests in accordance with UL-1008, include post-endurance temperature rise tests to verify the ability of the transfer switch to carry full rated current after completing the overload and endurance tests.

f. Manufacturer shall submit test reports upon request.

3. Field Tests

a. Field testing shall be done in accordance with the requirements specified in the General Conditions, Division 01, and Section 26 05 00 – Basic Electrical Requirements.

b. Prior to acceptance of the installation, load test the equipment with all available motor load, but do not exceed the generator's or automatic transfer switch's nameplate rating. Correct defects which become evident during this test.

1.04 SUBMITTALS

A. In accordance with the procedures and requirements set forth in the General Conditions and Section 01 33 00 – Submittal Procedures, the **ELECTRICAL SUBCONTRACTOR** shall obtain from the equipment manufacturer and submit the following:

1. Shop Drawings

2. Operation and Maintenance Manuals

3. Spare Parts Lists

4. Special Tools List

5. Reports of certified shop tests shall be submitted which indicates a closing and withstand ampere rating as required based on short circuit study requirements. Rating shall be symmetrical, 3 cycles at 480 VAC.

6. Guarantee/Warranty Program

B. Each submittal shall be identified by the applicable Specification Section.

1.05 SHOP DRAWINGS

A. Each submittal shall be complete in all respects, incorporating all information and data listed herein and all additional information required for evaluation of the proposed equipment's compliance with the Contract Documents.

B. Partial, incomplete or illegible submittals will be returned to the **ELECTRICAL SUBCONTRACTOR** for resubmittal without review.

C. Shop drawings for each automatic transfer switch shall include but not be limited to:

1. Product data sheets.

2. Complete assembly, layout, and installation drawings with clearly marked dimensions and conduit entrance locations.

3. Example equipment nameplate data sheet.

4. Complete internal schematic and interconnecting wiring diagrams.

5. Nameplate schedule.

6. Manufacturer's standard installation instructions.

7. Manufacturer's standard warranty.

D. The shop drawing information shall be complete and organized in such a way that the Engineer can determine if the requirements of these specifications are being met. Copies of technical bulletins, technical data sheets from "soft-cover" catalogs, and similar information which is "highlighted" or somehow identifies the specific equipment items the **ELECTRICAL SUBCONTRACTOR** intends to provide are acceptable and shall be submitted.

E. Prior to completion and final acceptance of the project, the **ELECTRICAL SUBCONTRACTOR** shall furnish and install "as-built" wiring diagrams for each automatic transfer switch. These final drawings shall be plastic laminated and securely placed inside each transfer switch and included in the O&M manuals.

1.06 OPERATION AND MAINTENANCE MANUALS

A. The **ELECTRICAL SUBCONTRACTOR** shall submit operation and maintenance manuals in accordance with the procedures and requirements set forth in the General Conditions and Division 01.

1.07 TOOLS, SUPPLIES AND SPARE PARTS

A. The automatic transfer switches shall be furnished with all special tools necessary to disassemble, service, repair and adjust the equipment. All spare parts as recommended

by the equipment manufacturer shall be furnished to the Owner by the **ELECTRICAL SUBCONTRACTOR**.

B. The spare parts shall be packed in containers suitable for long term storage, bearing labels clearly designating the contents and the pieces of equipment for which they are intended.

C. Spare parts shall be delivered at the same time as the equipment to which they pertain. The **ELECTRICAL SUBCONTRACTOR** shall properly store and safeguard such spare parts until completion of the work, at which time they shall be delivered to the Owner.

D. Spare parts lists, included with the shop drawing submittal, shall indicate specific sizes, quantities, and part numbers of the items to be furnished. Terms such as "1 lot of packing material" are not acceptable.

E. Parts shall be completely identified with a numerical system to facilitate parts inventory control and stocking. Each part shall be properly identified by a separate number. Those parts which are identical for more than one size, shall have the same parts number.

1.08 SERVICES OF MANUFACTURER'S REPRESENTATIVE

A. The **ELECTRICAL SUBCONTRACTOR** shall provide the services of a qualified manufacturer's technical representative who shall adequately supervise the installation and testing of all equipment furnished under this Contract and instruct the **ELECTRICAL SUBCONTRACTOR**'s personnel and the Owner's operating personnel in its maintenance and operation as outlined elsewhere in Division 01 and Section 46 00 00 – Equipment General Provisions. The services of the manufacturer's representative shall be provided for a period of not less than as follows:

1. One trip of one (1) working day during installation of the equipment for each automatic transfer switch.

2. One trip of one (1) working day after acceptance of the equipment.

3. One trip of one (1) working day during the warranty period.

B. Any additional time required to achieve successful installation and operation shall be at the expense of the **ELECTRICAL SUBCONTRACTOR**. The manufacturer's representative shall sign in and out at the office of the Engineer's Field Representative on each day he is at the project.

C. The manufacturer shall have an established network of service centers capable of servicing the specified equipment. The manufacturer shall have a service center within 50 miles of the project site which shall stock parts necessary to service the switch. The manufacturer shall include an 800 telephone number for a field service contact affixed to each enclosure.

D. Service center personnel shall be on call 24 hours a day, 365 days a year. Personnel shall be factory-trained and certified in the maintenance and repair of the specified equipment.

E. After-warranty service contracts shall be made available to the Owner by the manufacturer, through the service centers, to provide periodic maintenance and/or repair of the specified equipment.

1.09 IDENTIFICATION

A. Each automatic transfer switch shall be identified with the identification number indicated on the Drawings (e.g. ATS-1, ATS-2, etc.). A nameplate shall be securely affixed in a conspicuous place on each switch. Nameplates shall be as specified in Section 26 05 53, Identification for Electrical Systems.

1.10 TRAINING

A. The **ELECTRICAL SUBCONTRACTOR** shall provide training for Owner personnel. Training shall be conducted by the manufacturer's factory trained specialists who shall instruct Owner personnel in operation and maintenance of all equipment provided under this Section. Training shall be in accordance with the requirements of Section 46 00 00 – Equipment General Provisions.

B. Provide the services of an experienced, factory trained technician or service engineer of the switch manufacturer at the jobsite for minimum of three (3) days for training of Owner personnel, beginning at a date mutually agreeable to the **ELECTRICAL SUBCONTRACTOR** and the Owner. The technician shall be on duty at the site for at least 8 hours per day and shall be available 24 hours per day when required to advise concerning special problems with equipment and systems.

1.11 WARRANTY

A. The manufacturer shall warrant each automatic transfer switch for a minimum of five (5) years from date of shipment. In addition, the manufacturer shall repair or replace equipment found faulty under the terms of the warranty. The manufacturer shall submit data outlining the guarantee/warranty program.

1.12 CONSTRUCTION SEQUENCING

A. The **ELECTRICAL SUBCONTRACTOR** shall reference 01 14 00 – Coordination with Owner’s Operation, of these Specifications.

PART 2 – PRODUCTS

2.01 MANUFACTURERS

A. The equipment covered by this Specification is intended to be standard equipment of proven performance as manufactured by reputable concerns. Equipment shall be designed, constructed and installed in accordance with the best practices of the trade, and shall operate satisfactorily when installed as shown on the Drawings.

B. The equipment described herein, as a minimum, shall meet all of the requirements specified in this Section and shall be a product of a manufacturer who has produced automatic transfer switches for a period of at least five (5) years. The equipment shall be compatible with the loads to be served. Assembly of the switches by a fabricator is not acceptable.

C. The manufacturer of the automatic transfer switch shall verify that the switches are listed by Underwriters Laboratories, Inc., standard UL-1008, with 3-cycle withstand and close-in values as indicated on the Drawings or specified herein.

D. The automatic transfer switches shall be molded case or insulated case circuit breaker design, Type ATV (Open Transition) as manufactured by Cutler Hammer, Siemens Energy and Automation Inc. equivalent, General Electric equivalent, or equal.

2.02 AUTOMATIC TRANSFER SWITCH

A. General

1. Switches shall have ampere ratings and number of poles as indicated on the Drawings and shall be suitable for 480 VAC, three-phase, 60 Hertz operation.

2. For three phase, four-wire systems where a neutral is required, a true four-pole switch shall be supplied with all four electrically and mechanically identical poles mounted on a common shaft. The continuous current rating and the closing and withstand rating of the fourth pole shall be identical to the rating of the main poles.

3. The transfer switch shall be housed in a NEMA 1 (gasketed) free-standing enclosure fabricated from 12-gauge steel suitable for floor mounting. The enclosure shall exceed the UL-1008 minimum wire bending space requirements. The enclosure shall be equipped with an internal, welded steel, door-mounted print pocket.

4. The transfer switch shall have both top and bottom mounted cable access.

5. The switch shall be capable of switching all classes of load and rated for continuous duty when installed in a non-ventilated enclosure.

6. The three-cycle closing and withstand current rating of the switch shall be 65,000 amperes RMS (minimum). This rating shall not be restricted by the use of a specific manufacturer's circuit breaker.

7. This switch shall be complete with all accessories and listed by UL under Standard UL-1008 for use on emergency systems.

8. All bolted bus connections shall have Belleville compression type washers. Switches for four-wire systems shall be furnished with a fully rated solid neutral bus.

9. The switch shall be equipped with 90°C rated copper/aluminum solderless mechanical type lugs of the proper quantity and size to accommodate the termination of field wiring.

10. Switches shall be capable of normal operation during and after seismic loading. Seismic loading shall not cause false operation.

B. Design Requirements

1. Switches shall contain two drawout, mechanically interlocked, i circuit breakers with ampere ratings and number of poles as indicated on the Drawings and shall be suitable for 480 VAC, three-phase, 60 Hertz operation. A center-off-position shall be provided as a neutral position during switching. Minimum transfer time shall 400 milliseconds. The switches shall be service entrance rated and shall bear the service entrance label as indicated on the Drawings.

2. Switches shall be capable of transferring successfully in either direction with 70 percent of rated voltage applied to the terminals.

3. The time delay between the opening of the closed contacts and the closing of the open contacts shall allow for voltage decay before transfer, allowing the motor and transformer loads to be re-energized after transfer with normal in-rush current. Switches using in-phase monitors are not acceptable.

4. Normal and standby contacts shall be positively interlocked mechanically and electrically to prevent simultaneous closing. Main contacts to be of silver-tungsten alloy, mechanically locked in position in both the normal and standby positions without the use of hooks, latches, or magnets. Provide separate arcing contacts, with magnetic blowouts on each pole. Interlocked molded case circuit breakers switches or contactors are not acceptable.

5. Equip the transfer switch with a permanently attached, safe, manual operator designed to prevent injury to personnel in the event the electrical operator should become energized during manual transfer. The manual operator shall provide the same contact-to-contact transfer speed as the electrical operator to prevent a flashover from slowly switching the main contacts.

C. Sequence of Operation

1. Should the voltage on any phase of the normal source drop below 80 percent or increase to 120 percent, or frequency drops below 90 percent, or increase to 110 percent, or 20 percent voltage differential between phases occur, after a programmable time delay period of 0-9999 seconds factory set at three (3) seconds to allow for momentary dips, the engine starting contact(s) shall close to [start the standby plant] [connect the standby source].

2. Transfer to the standby power source shall occur when 90 percent of rated voltage and frequency has been reached by the standby power source.

3. Transfer back to utility power shall be initiated manually via a remote signal from the paralleling switchgear.

4. After retransfer to the utility power source, the standby plant shall operate at no load for a programmable period of 0-9999 seconds factory set at 300 seconds. Should the normal power source fail during this time delay period, the transfer switch shall automatically return to the standby source.

D. Controls

1. The transfer switch shall be equipped with a microprocessor-based control system to provide all the operational functions of the automatic transfer switch. The controller shall have two asynchronous serial ports. The controller shall have a real time clock with Nicad battery back-up.

2. The CPU shall be equipped with self-diagnostics which perform periodic checks of the memory, I/O, and communication circuits with a watchdog power fail circuit.

3. The controller shall use industry standard open architecture communication protocol for high speed serial communications via multidrop connection to other controllers and to a master terminal with up to 4000 ft of cable, or further with the addition of a communication repeater. The serial communication port shall be RS422/485 compatible.

4. The serial communication port shall allow interface to either the manufacturer's or the Owner's furnished remote supervisory control system.

5. The controller shall have password protection to limit access to authorized personnel.

6. The controller shall include a 20 character LCD display with a keypad, which allows access to the system.

7. The controller shall include three-phase over/under voltage, over/under frequency, phase sequence detection, and phase differential monitoring on both normal and standby sources.

8. The controller shall be capable of storing the following records in memory for access either locally or remotely:

   a. Number of hours the transfer switch is in the standby position (total since record reset).

   b. Number of hours standby power source is available (total since record reset).

   c. Total transfer in either direction (total since record reset).

   d. Date, time, and description of the last four source failures.

   e. Date of the last exercise period.

   f. Date of record reset.

9. Light emitting diodes shall be mounted on the controller to indicate:

   a. Switch is in normal position

   b. Switch is in standby position.

   c. Controller is running.

10. A three-phase digital LCD voltage readout, with 1% accuracy shall display all three separate phase-to-phase voltages simultaneously for both the normal and standby source.

11. A digital LCD frequency readout with 1% accuracy shall display frequency for both the normal and standby source.

12. An LCD readout shall display both normal source and standby source availability.

13. The microprocessor controller shall meet the following requirements:

Storage conditions:	25°C to 85°C
Operation conditions:	20°C to 70°C ambient
Humidity:	0 to 99% relative humidity, non-condensing
Capable of withstanding infinite power interruptions	
Surge withstand per ANSI/IEEE C-37.90A-1978	

14. All control wiring shall be 18 gauge (minimum), 600 VAC, SIS switchboard type. All control wiring shall be identified at each termination (both ends) using tubular, sleeve-type wire markers.

15. The automatic transfer switch controller shall be a Model ATC-900 IQ transfer device as manufactured by Eaton, or equal. The controller shall be programmed by the manufacturer at the factory.

E. Accessories

1. Programmable three phase sensing of the normal source set to pickup at 90% and dropout at 80% of rated voltage and overvoltage to pickup at 120% and dropout out at 110% of rated voltage. Programmable frequency pickup at 95% and dropout at 90% and over frequency to pickup at 110% and dropout at 105% of rated frequency. Programmable voltage differential between phases, set at 20%, and phase sequence monitoring.

2. Programmable three phase sensing of the standby source set to pickup at 90% and dropout at 80% of rated voltage and overvoltage to pickup at 120% and dropout out at 110% of rated voltage. Programmable frequency pickup at 95% and dropout at 90% and over frequency to pickup at 110% and dropout at 105% of rated frequency. Programmable voltage differential between phases, set at 20%, and phase sequence monitoring.

3. Time delay for override of momentary normal source power outages (delays engine start signal and transfer switch operation). Programmable 0-9999 seconds. Factory set at 3 seconds.

4. Time delay on retransfer to normal, programmable 0-9999 seconds, factory set at 300 seconds, with overrun to provide programmable 0-9999 second time delay, factory set at 300 seconds, unloaded engine operation after retransfer to normal.

5. Time delay on transfer to standby, programmable 0-9999 seconds, factory set at 3 seconds.

6. A maintained type load test switch shall be included to simulate a normal power failure, keypad initiated.

7. A time delay bypass on retransfer to normal shall be included. Keypad initiated.

8. Contact, rated 10 A at 30VDC, to close on failure of normal source to initiate engine starting.

9. A plant exerciser shall be provided with (10) 7 day events, programmable for any day of the week and (24) calendar events, programmable for any month/day, to automatically exercise the standby plant programmable in one minute increments. Also include a control switch for selection of either "no load" (switch will not transfer) or "load" (switch will transfer) during the exercise period. Keypad initiated.

10. Relay contacts which close when normal source fails wired to a terminal strip.

11. Relay contacts which open when normal source fails wired to a terminal strip.

12. Two auxiliary contacts rated 15 A at 120 VAC on main shaft, closed on normal and wired to a terminal strip.

13. Two auxiliary contacts rated 15 A at 120 VAC on main shaft, closed on standby and wired to a terminal strip.

14. Provide a preferred source selector switch to permit the selection of either source as the "preferred" source which the ATS will always seek if that source is available. The two-position selector switch shall have a legend plate which reads "Source A/Source B."

2.03 PAINTING

A. Painting shall conform with the requirements of Section 09 90 00 – Painting. Finish coat shall be ANSI #61.

B. Prior to final completion of the work, all metal surfaces of the equipment shall be cleaned thoroughly, and all scratches and abrasions shall be retouched with the same coating as used for factory finishing coats.

PART 3 – EXECUTION

3.01 INSTALLATION

A. Each automatic transfer switch shall be installed as shown on the Drawings and in accordance with the manufacturer's installation instructions.

B. The automatic transfer switch shall be provided with adequate lifting means for installation of wall or floor mounted enclosures.

C. The **ELECTRICAL SUBCONTRACTOR** shall tighten all assembled bolted connections to the manufacturer's torque recommendations prior to energizing.

D. Install each switch to allow complete door swing required for component removal. This is specifically required where a switch is set next to a wall to the left of the switch enclosure.

END OF SECTION

NO TEXT ON THIS PAGE

ATTACHMANET AV – 26 41 00 FACILITY LIGHTNING PROTECTION

DIVISION 26

ELECTRICAL

(FILED SUB BID REQUIRED)

SECTION 26 41 00
FACILITY LIGHTNING PROTECTION[1]

PART 1 – GENERAL

1.01 FILED SUB-BID REQUIREMENTS

A. This Section is part of the filed sub-bid for Division 26 – Electrical. See Section 26 05 00.

1.02 THE REQUIREMENT

A. The **LIGHTNING PROTECTION SUB-SUBCONTRACTOR** shall furnish, install, test, and place in satisfactory operation a complete lightning protection system as specified herein. This is a performance specification. The Drawings do not show a complete lightning protection system design. The **ELECTRICAL SUBCONTRACTOR** shall retain the services of a firm specializing in the design, installation, and testing of lightning protection systems, which shall be identified as a Filed Sub-Sub-Bid as indicated in Division 01 and Section 26 05 00 – Basic Electrical Requirements.

1.03 CODES AND STANDARDS

A. The system shall comply with the following codes and standards:

1. Underwriters Laboratories, Inc. (U.L.):

    a. U.L. 96 – Lightning System Components

    b. U.L. 96A – Installation Requirements for Lightning Protection Systems

    c. U.L. 467 – Grounding and Bonding Equipment

2. National Fire Protection Association (NFPA):

    a. ANSI/NFPA 780 – Lightning Protection Code

3. Lightning Protection Institute (LPI):

    a. LPI-175 – Standard of Practice

---

1 Addendum No. 5

1.04 SUBMITTALS

A. In accordance with the procedures and requirements set forth in the General Conditions and Section 01 33 00 – Submittal Procedures, the **LIGHTNING PROTECTION SUB-SUBCONTRACTOR** shall obtain from the equipment manufacturer and submit the following:

1. Shop Drawings
2. Operation and Maintenance Manuals
3. Spare Parts List
4. Test Reports
5. UL Master Label Certification

1.05 SHOP DRAWINGS

A. Each submittal shall be complete in all respects, incorporating all information and data listed herein and all additional information required for evaluation of the proposed equipment's compliance with the Contract Documents.

B. Partial, incomplete or illegible submittals will be returned to the **LIGHTNING PROTECTION SUB-SUBCONTRACTOR** without review for resubmittal.

C. Shop drawings for each lightning protection system shall include, but not be limited to:

1. Product data sheets.
2. Complete U.L. approved, full size layout and installation drawings/details with clearly marked dimensions. Drawings shall indicate the exact location of all system components. Drawings shall be signed by a full-time employee of the lightning protection system manufacturer who is in responsible charge of this project and has been engaged in the business for at least ten (10) years.
3. Weights of major all components.
4. Bill of material list for each lightning protection system.
5. Manufacturer's installation instructions.
6. Manufacturer's and installer's warranty information.
7. Evidence of the designer/installers UL listing.

022122

D. The shop drawing information shall be complete and organized in such a way that the Engineer can determine if the requirements of these specifications are being met. Copies of technical bulletins, technical data sheets from "soft-cover" catalogs, and

similar information which is "highlighted" or somehow identifies the specific equipment items the **LIGHTNING PROTECTION SUB-SUBCONTRACTOR** intends to provide are acceptable and shall be submitted.

1.06 OPERATIONS AND MAINTENANCE MANUALS

A. The **LIGHTNING PROTECTION SUB-SUBCONTRACTOR** shall submit operation and maintenance manuals in accordance with the procedures and requirements set forth in the General Conditions and Division 01. The manuals shall include:

1. Instruction books and/or leaflets.

2. Recommended spare parts list.

3. Final as-built construction drawings included in the shop drawings incorporating all changes made during the installation.

4. All other information that was included in the shop drawing submittal.

1.07 SPARE PARTS

A. The lightning protection system shall be furnished with all spare parts as recommended by the equipment manufacturer. In addition to the manufacturer recommended spare parts, the **LIGHTNING PROTECTION SUB-SUBCONTRACTOR** shall furnish the following minimum spare parts for each structure provided with a lightning protection system under this Contract:

Number Required	Descriptions
2	Air Terminals
2	Point Tip Protectors

B. The spare parts shall be packed in containers suitable for long term storage, bearing labels clearly designating the contents and the pieces of equipment for which they are intended.

C. Spare parts shall be delivered at the same time as the equipment to which they pertain. The **LIGHTNING PROTECTION SUB-SUBCONTRACTOR** shall properly store and safeguard such spare parts until completion of the Work, at which time they shall be delivered to the Owner.

D. Spare parts lists, included with the shop drawing submittal shall indicate specific sizes, quantities, and part numbers of the items to be furnished. Terms such as "1 lot of packing material" are not acceptable.

E. Parts shall be completely identified with a numerical system to facilitate parts inventory control and stocking. Each part shall be properly identified by a separate number. Those parts which are identical for more than one size, shall have the same part number.

PART 2 – PRODUCTS

2.01 MANUFACTURERS

A. The lightning protection systems covered by this Specification shall be furnished using standard components of proven performance as manufactured by reputable concerns. The systems shall be designed, constructed and installed in accordance with the best practices of the trade, and shall operate satisfactorily when installed.

B. System designer/supplier qualifications shall be as follows:

1. System components shall be manufactured by a company specializing in lightning protection equipment with a minimum of 5 years documented experience. Company shall be listed in the section entitled "Lightning Conductor, Air Terminals and Fittings" of the U.L. "Electrical Construction Materials Directory" for at least 5 years previous to this Contract's bid opening date.

2. The system designer/installer shall be an authorized installer of manufacturer with a minimum of 5 years of documented experience. Designer/Installer shall be listed in the section entitled "Lightning Protection Installation" of the U.L. "Electrical Construction Materials Directory" for at least 5 years previous to this Contract's bid opening date.

2.02 LIGHTNING PROTECTION SYSTEMS

A. General

1. All components and parts of the lightning protection system shall be as specified herein. The materials used shall meet or exceed the material specification requirements of the Underwriters Laboratories, Inc. All materials shall be marked with a UL label or stamp.

2. The complete lightning protection system for the new structure shall be inspected and included in the Master Label certification.

B. Conductors

1. Conductors shall be aluminum cable, consisting of a minimum of 24 strands of No. 14 AWG aluminum wire. Copper conductors shall be furnished and installed only where required and when in contact with the earth. Where termination of copper conductors is required to aluminum parts, suitable bi-metallic connectors approved for the purpose shall be furnished and installed.

C. Fittings

1. Fittings shall be the bolted type with stainless steel bolts, nuts, and washers. Fittings shall be of cast metal construction specifically designed for the application. Crimp-type fittings are not acceptable. Bi-metallic type fittings shall be furnished where required.

D. Fasteners

1. Fasteners shall be manufactured from non-corrosive material of ample strength and rigidity for the application.

E. Bases

1. Bases shall be bolted style provided with the model to suit the application (i.e. parapet, standing seam, etc.). Bolts, nuts, and washers shall be made of stainless steel. Bases shall be of aluminum or bronze construction, compatible with the material of the surface to which it is attached. Crimp-type bases are not acceptable.

F. Ground Rods

1. Ground rods shall be 3/4-inch by 10-foot 0-inch sectional type copper-clad steel rods; as specified in Section 26 05 26 – Grounding and Bonding for Electrical Systems; quantity as required. Ground rods and all associated hardware shall be UL 467 listed.

G. Air Terminals

1. Air terminals shall be solid aluminum. Air terminals shall be tapered or blunt tip type to suit the application and furnished with air terminal bases and safety tips (ball or bullet type) for impalement protection.

H. Thru-Roof Hardware

1. Thru-roof penetrations shall have stainless steel nuts, bolts, and washers. Sealing washers and sealing boots shall be provided as required and shall be compatible with the roofing material. Conductor connections to this roof hardware shall be by bolted connection. Crimp type connections are not acceptable.

PART 3 – EXECUTION

3.01 INSTALLATION

A. The lightning protection system shall be furnished and installed in accordance with the manufacturer's installation instructions. One (1) copy of these instructions shall be included with the system components at time of shipment. The system components shall be suitably protected until accepted by the Owner.

B. The equipment shall be installed in accordance with the manufacturer's recommendations. This shall include, but not be limited to the following:

1. Course all main down conductors to maintain a downward or horizontal run free of pockets or sags. Maintain an eight-inch (8") minimum radius and make no bend greater than 90 degrees. Follow the most direct route with inductance bonding conductors maintaining the horizontal or downward course of the main conductor. Interconnect roof conductors to provide at least two paths to ground from each terminal and to form closed loops. Follow the most direct path possible with down conductors between roof conductors and ground terminals. All down conductors for new occupiable buildings shall be placed in a concealed manner. Down conductors for existing occupiable structures, tanks, basins, and other non-occupiable structures may be installed exposed.

2. Install ground connections at no less than 60-foot intervals and at each down conductor on perimeter. If the structure has a ground grid, the ground rods from that grid may be used for connection to the down conductors. At each ground connection, determine the extent of the grounding arrangement according to the volume and type of soil encountered and the lowest expected moisture content. Have the Owner's representative observe each ground connection. Bond together all electrical service, telephone service, and lightning protection grounds to all underground metallic piping systems as required by Article 250 of the MEC.

3. The structural steel frame (where provided) may substitute for main down conductors provided the frame is electrically continuous and of adequate cross-section. Where the steel frame is utilized, connect the roof conductor to steel at least as often and at the same column as the ground connections. Make connections to steel with exothermic welds wherever possible. Provide bonding as required to make the entire metal frame continuous.

4. Bond all sizable metal objects within 6-feet of down, roof, or grounding conductors to the system. Use only approved fittings and conductors.

5. Wherever possible problems with corrosion are encountered, use substitute approved materials and/or provide corrosion protection. Use bimetallic or other specially designed and approved connectors where dissimilar metals are to be joined.

6. Install air terminals within 2-feet of the edge of structure and at intervals not greater than 20-feet along perimeter and peak. Provide additional terminals to limit spacing across roof to 50-feet maximum. Bond any exposed metallic object or surface to the roof conductor. Flash all terminal or conductor penetrations in the roof to conform to the roofer's requirements.

7. Record each ground connection location and mark up a reproducible copy of the approved shop drawings with their location. Also, indicate any substantial field

modifications on these drawings. These drawings shall be included in the O&M manual.

8. Log all continuity tests of metal framing, ground grid connections, bonding, and similar connections. Indicate the location of tests or plans. Include test results in the O&M manual.

9. Retain U.L. to make an inspection of the completed installation and issue a Master Label Certification. Furnish a copy of the Certification to the Owner upon receipt.

3.02 TESTING

A. All tests shall be performed in accordance with the requirements of the General Conditions and Division 01. The following tests are required:

1. Certified Shop Tests and Reports

   a. None Required.

2. Field Tests

   a. After installation, the lightning protection system shall be tested for continuity to the ground grid. The tests shall be made by the lightning protection system installer. Test shall be as follows:

      1) Record the resistance between each down conductor and the ground grid to ensure a suitable low-resistance connection. All resistance values shall be 1 ohm or less. Test shall be made after the ground grid has been installed and tested per the requirements of Section 26 05 26 – Grounding and Bonding for Electrical Systems.

END OF SECTION

NO TEXT ON THIS PAGE

ATTACHMENT AW – 26 43 13 SURGE PROTECTIVE DEVICES

DIVISION 26

ELECTRICAL

(FILED SUB BID REQUIRED)

SECTION 26 43 13
SURGE PROTECTIVE DEVICES[1]

PART 1 – GENERAL

1.01 FILED SUB-BID REQUIREMENTS

A. This Section is part of the filed sub-bid for Division 26 – Electrical. See Section 26 05 00.

1.02 THE REQUIREMENT

A. The **ELECTRICAL SUBCONTRACTOR** shall furnish, install, and place in satisfactory operation, the surge protective devices (SPD) as specified herein and indicated on the Drawings.

B. Reference Section 26 05 19 – Low-Voltage Conductors and Cables, and Section 26 05 53 – Identification for Electrical Systems.

1.03 CODES AND STANDARDS

A. The surge protective device shall be designed, manufactured, and/or listed to the following standards as applicable:

1. Underwriters Laboratories, Inc. (UL)

   a. UL1449, latest edition: Surge Protective Devices

   b. UL1283, latest edition: Electromagnetic Interference Filters

B. American National Standards Institute (ANSI)/Institute of Electrical & Electronic Engineers (IEEE)

1. C62.41.1: 2002 Guide for Surge Voltages in Low-Voltage AC Power Circuits

2. C62.41.2: 2002 Recommend Practice on Characterization of Surges in Low Voltage (100V and Less) AC Power Circuits.

---

[1] **Addendum No. 5**

3. C62.45: 2002 IEEE Recommended Practice on Surge Testing for Equipment Connected to Low-Voltage (1000V and Less) AC Power Circuits

4. C62.62: 2000 IEEE Standard Test Specifications for Surge Protective Devices for Low Voltage (1000V and Less) AC Power Circuits

1.04 SUBMITTALS

A. In accordance with the procedures and requirements set forth in General Conditions and Section 01 33 00 – Submittal Procedures, the **ELECTRICAL SUBCONTRACTOR** shall obtain from the equipment manufacturer and submit the following:

1. Shop Drawings

2. Operation and Maintenance Manuals

3. Spare Parts List

1.05 SHOP DRAWINGS

A. Each submittal shall be complete in all respects, incorporating all information and data listed herein and all additional information required for evaluation of the proposed equipment's compliance with the Contract Documents.

B. Partial, incomplete, or illegible submittals will be returned to the **ELECTRICAL SUBCONTRACTOR** without review for re-submittal.

C. Drawings submitted by the manufacturer shall be complete and documented to provide the Owner with operations and maintenance capabilities.

D. Shop drawings for each SPD shall include but not be limited to:

1. A Compliance, Deviations, and Exceptions (CD&E) letter. If the shop drawings are submitted without this CD&E letter, the submittal will be rejected. The letter shall include all comments, deviations and exceptions taken to the Drawings and Specifications by the **ELECTRICAL SUBCONTRACTOR** AND Equipment Manufacturer/Supplier. This letter shall include a copy of this Specification Section. In the left margin beside each and every paragraph/item, a letter "C", "D", or "E" shall be typed or written in. The letter "C" shall be for full compliance with the requirement. The letter "D" shall be for a deviation from the requirement. The letter "E" shall be for taking exception to a requirement. Any requirements with the letter "D" or "E" beside them shall be provided with a full typewritten explanation of the deviation/exception. Handwritten explanation of the deviations/exceptions is not acceptable. The CD&E letter shall also address deviations, and exceptions taken to each Drawing related to this Specification Section.

2. Product Data Sheets.

121919

3. Detailed drawings showing weights and dimensions.

4. Wiring diagrams showing field connections.

5. Proof that all products provided under this Section are UL listed and labeled by Underwriters Laboratories to UL1449, latest Edition. This proof shall be a copy of the data listed under the UL File Number for the manufacturer, which may be obtained from the UL Online Certification Directory. No other means of proving compliance (such as manufacturer data sheets, marketing material, etc) will be considered acceptable.

6. Proof of Short Circuit Current Ratings (SCCR), Voltage Protection Ratings (VPRs) for all modes, Maximum Continuous Operating Voltage rating (MCOV), Nominal Discharge Current (In), and device listing Type shall be submitted using the same means as described in the paragraph above.

7. Proof that all products provided under this Section are UL listed and labeled by Underwriters Laboratories to UL 1283, latest Edition. This proof shall be a copy of the data listed under the UL File Number for the manufacturer, which may be obtained from the UL Online Certification Directory. No other means of proving compliance (such as manufacturer data sheets, marketing material, etc) will be considered acceptable.

8. Manufacturer’s Warranty Information

E. The shop drawing information shall be complete and organized in such a way that the Engineer can determine if the requirements of these Specifications are being met. Copies of technical bulletins, technical data sheets from "Soft Cover" catalogs, and similar information which is "highlighted" or somehow identifies the specific equipment items the **ELECTRICAL SUBCONTRACTOR** intends to provide are to provide are acceptable and shall be submitted.

1.06 OPERATION AND MAINTENANCE MANUALS

A. The **ELECTRICAL SUBCONTRACTOR** shall submit operation and maintenance manuals in accordance with the procedures and requirements set forth in the General Conditions and Division 01.

1.07 SPARE PARTS

A. All spare parts as recommended by the equipment manufacturer shall be furnished by the **ELECTRICAL SUBCONTRACTOR** to the Owner.

B. The **ELECTRICAL SUBCONTRACTOR** shall furnish one (1) spare field replacement module of each rating provided under this Contract.

C. The spare parts shall be packed in containers suitable for long term storage, bearing labels clearly designating the contents and the pieces of equipment for which they are intended.

D. Spare parts shall be delivered at the same time as the equipment to which they pertain. The **ELECTRICAL SUBCONTRACTOR** shall properly store and safeguard such spare parts until completion of the Work, at which time they shall be delivered to the Owner.

E. Spare parts lists, included with the shop drawing submittal shall indicate specific sizes, quantities, and part numbers of the items to be furnished. Terms such as "1 lot of packing material" are not acceptable.

F. Parts shall be completely identified with a numerical system to facilitate parts inventory control and stocking. Each part shall be properly identified by a separate number. Those parts which are identical for more than one size, shall have the same part number.

1.08 IDENTIFICATION

A. Each SPD shall be identified by the circuit number and equipment name as indicated on the Drawings. A nameplate shall be securely affixed in a conspicuous place on each SPD. Nameplates shall be as specified in Section 26 05 53 – Identification for Electrical Systems.

1.09 WARRANTY

A. All SPDs, associated hardware, and supporting components shall be warranted to be free from defects in materials and workmanship, under normal use and in accordance with the instructions provided, for a period of five (5) years after acceptance of the equipment by the Owner.

B. Any component or subassembly contained within the surge protection system that shows evidence of failure or incorrect operation during the warranty period, shall be replaced by the manufacturer at no additional cost to the Owner.

PART 2 – PRODUCTS

2.01 GENERAL

A. The SPD units shall be UL 1449 5th edition listed and must bear the UL mark. Units that are “manufactured in accordance with” UL 1449 or tested by other testing agencies “in accordance with” UL 1449 are not acceptable and will be rejected.

B. Type II SPD units shall be UL 1283 7th edition Listed and must bear the UL mark. Units that are “manufactured in accordance with” UL 1283 or tested by other testing agencies “in accordance with” UL 1283 are not acceptable and will be rejected. Further, SPD units using UL 1283 capacitors but not tested to UL 1283 will be rejected.

2.02 PRODUCTS

A. Type I surge protective devices (SPD) shall be furnished and installed when shown without upstream overcurrent protection on the Drawings. Type II SPDs shall be provided in all other locations. Type II SPDs shall not require the use of a specific upstream overcurrent device. SPDs shall be provided in the location and quantity as shown on the Drawings.

B. Each SPD shall be rated for the voltage and configuration of the equipment to which it is connected.

C. Each Type II SPD shall have UL 1283 EMI/RFI filtering with minimum attenuation of -50dB at 100kHz.

D. The short circuit current rating of each SPD shall match or exceed the rating of the equipment to which it is connected. The **ELECTRICAL SUBCONTRACTOR** shall reference the Drawings for short circuit current rating of each piece of equipment.

E. Each SPD system shall provide surge protection in all possible modes. Surge protection shall be as follows:

System Configuration	Modes of Protection	Number of Modes
3-Phase Wye	L-N, L-G, N-G	7
3-Phase Delta	L-L, L-G	6
3-Phase Impedance Grounded	L-L, L-G	6
Single-Phase	L-N, L-G, N-G	3

F. Each SPD shall have a Maximum Continuous Operating Voltage (MCOV) of at least 115% of the nominal voltage of the equipment to which it is connected.

G. The Nominal Discharge Current (In) of each SPD shall be 20kA. Peak surge current ratings shall not be used as a basis for applying the SPD to the system.

H. The Voltage Protection Rating (VPR) of each SPD shall not exceed the following:

System Voltage	L-N	L-G	L-L	N-G
208Y/120	700V	700V	1200V	700V
480Y/277	1200V	2000V	2000V	1200V
480 DELTA	N/A	2000V	2500V	N/A
240 DELTA	N/A	1000V	1000V	N/A

System Voltage	L-N	L-G	L-L	N-G
120/240	700V	700V	1200V	700V

I. The surge current rating for each SPD shall be as indicated on the Drawings. Surge current ratings are indicated on single line diagrams and in panel schedules. Surge current rating indicated is on a per phase basis.

J. SPDs which are indicated to be installed externally mounted from the equipment that they protect shall be provided within a separate enclosure. The enclosure shall match or exceed the NEMA rating of the enclosure for the equipment that it is serving (i.e. NEMA1, NEMA 12, NEMA 4X, etc).

K. Each SPD shall be provided with the following accessories:

1. Each individual module shall feature an LED indicating the individual module has all surge protection devices active. If any single component is taken off-line, the LED shall turn off and another LED shall illuminate, providing individual module as well as total system status indication.

2. Surge counter and audible alarm with reset/silence switch.

3. One set of Form C (SPDT) dry contacts rated for at least 5A at 120VAC.

L. SPDs which are indicated to be installed integral within the equipment that they protect shall be fabricated by the same manufacturer as the equipment that they serve. SPDs which are indicated to be installed externally mounted from the equipment that they serve shall be manufactured by Eaton, ASCO/Emerson Network Power, Current Technologies, General Electric, or Square D.

PART 3 – EXECUTION

3.01 INSTALLATION

A. The SPD units shall be furnished and installed as shown on the Drawings and in accordance with the manufacturer's installation instructions

B. SPDs which are indicated to be integral with the equipment that they protect shall be installed within the enclosure for that equipment.

C. Externally mounted SPDs shall be installed as follows:

1. The SPD units shall be mounted such that the conductor lengths are as short as possible, but no greater than 36 inches. Any installation resulting in a conductor length of greater than 36 inches shall be reviewed with the Engineer as a special type of cable may need to be installed. For equipment such as panelboards, the **ELECTRICAL SUBCONTRACTOR** shall relocate the circuit breaker that is to be

connected to the SPD as needed to achieve the shortest conductor length possible.

2. The **ELECTRICAL SUBCONTRACTOR** shall use a close nipple to enclose the conductors between the SPD and the equipment served. However, if due to field conditions a 90 degree conduit bend is required to connect the SPD to the equipment that it serves, the bend shall have a minimum radius of 36 inches to eliminate any potential for sharp bends in the conductors.

3. Conductors between the equipment served and the SPD shall be 600V power wire and cable as specified in Section 26 05 19 – Low-Voltage Conductors and Cables. The individual conductors shall be gently twisted and sized as indicated on the Drawings.

D. Prior to energizing, the following shall be performed for each SPD:

1. Verify that the SPD unit voltage and configuration is suitable for the system to which it is connected.

2. Verify that any Neutral to Ground bonding jumpers are installed as required.

3.02 TESTING

A. All tests shall be performed in accordance with the requirements of the General Conditions and Division 01. The following tests are required:

1. Shop Tests

a. Standard factory tests shall be performed on the equipment under this Section. All tests shall be in accordance with the latest version of NEMA, ANSI, and UL standards.

b. All surge protective devices, subassemblies, and components shall be 100% tested and certified by the manufacturer to meet their published performance parameters.

2. Field Tests

a. None required.

END OF SECTION

NO TEXT ON THIS PAGE

ATTACHMENT AX – 26 50 00 LIGHTING

DIVISION 26

ELECTRICAL

(FILED SUB BID REQUIRED)

SECTION 26 50 00

LIGHTING[1]

PART 1 – GENERAL

1.01 FILED SUB-BID REQUIREMENTS

A. This Section is part of the filed sub-bid for Division 26 – Electrical. See Section 26 05 00.

1.02 THE REQUIREMENT

A. The **ELECTRICAL SUBCONTRACTOR** shall furnish and install all lighting fixtures, labor, and material, in accordance with the preceding Specifications, the requirements of this Section, and as shown on the Drawings.

B. Reference the following Specification Sections:

1. Section 26 05 00 – Basic Electrical Requirements

2. Section 26 05 26 – Grounding and Bonding for Electrical Systems

1.03 CODES AND STANDARDS

A. All equipment shall be Listed by and shall bear the Label of Underwriter's Laboratories, Incorporated (UL).

B. The equipment shall be designed, manufactured, and/or Listed to the following standards as applicable.

1. Institute of Electrical and Electronic Engineers (IEEE)

   a. IEEE C62.41.3 – Guide for Surge Voltages in Low-Voltage AC Power Circuits

2. Illuminating Engineering Society (IES)

3. National Fire Protection Association (NFPA)

   a. NFPA 70 – National Electric Code (NEC).

020624

---

1 Addendum No. 5

4. Underwriters Laboratories (UL)

    a. UL 924 – Emergency Lighting and Power Equipment

    b. UL 844 – Luminaires for Use in Hazardous (Classified) Locations

    c. UL 916 – Standard for Energy Management Equipment

    d. UL 1012 – Standard for Safety Power Units Other Than Class 2

    e. UL 1598 – Luminaires

1.04 SUBMITTALS

A. In accordance with the procedures and requirements set forth in the General Conditions and Section 01 33 00 – Submittal Procedures, the **ELECTRICAL SUBCONTRACTOR** shall obtain from the equipment manufacturer and submit the following:

1. Shop Drawings

2. Operation and Maintenance Manuals

3. Spare Parts Lists

B. Each submittal shall be identified by the applicable Specification Section.

1.05 SHOP DRAWINGS

A. Each submittal shall be complete in all respects, incorporating all information and data listed herein and all additional information required for evaluation of the proposed equipment's compliance with the Contract Documents.

B. Partial, incomplete, or illegible submittals will be returned to the **ELECTRICAL SUBCONTRACTOR** for resubmittal without review.

C. Shop drawings shall include but not be limited to:

1. Product data sheets.

2. Catalog cuts for each fixture type showing performance and construction details of standard fixtures, and complete working drawings showing all proposed construction details of special or modified standard fixtures.

3. Photometric curves.

4. LED data including efficiency (Efficacy lumens/watt) information.

5. LED Driver information

6. Catalog data including applicable coefficients of utilization tables, isolux chart of illumination on a horizontal plane, beam efficiency, horizontal and vertical beam spread, and beam lumens.

7. Manufacturer’s warranty information.

8. Manufacturer's connection/wiring diagram for each astronomical time switch system used on the project.

9. Custom wiring diagrams for each individual combination of lighting contactor and photocell used on this project. Standard wiring diagrams that are not custom created by the manufacturer for the individual lighting contactors for this project are not acceptable. One wiring diagram which is typical for all lighting contactors is not acceptable. Each wiring diagram shall include wire identification and terminal numbers. Indicate all devices, regardless of their physical location, on the diagrams. Identify on each respective wiring diagram specific equipment names and equipment numbers consistent with those indicated on the Drawings.

10. System (entire fixture assembly) efficiency data.

11. Pole and foundation calculations.

D. Shop drawings shall be submitted to the Engineer for review and acceptance for all fixtures before fixtures and poles are manufactured. Substitutions will be permitted only if acceptable to the Engineer.

E. Manufacturer's model/series and description in the fixture schedule on the Contract Documents establishes a level of quality, style, finish, etc. The use of a model/series describing the various types of fixtures shall be used as a guide only and does not exclude all the required accessories or hardware that may be required for a complete installation.

1.06 OPERATION AND MAINTENANCE MANUALS

A. The **ELECTRICAL SUBCONTRACTOR** shall submit Operation and Maintenance Manuals in accordance with the procedures and requirements set forth in the General Conditions and Division 01.

1.07 SPARE PARTS

A. All spare parts as recommended by the equipment manufacturer shall be furnished to the Owner by the **ELECTRICAL SUBCONTRACTOR**. The following additional spare parts shall be furnished:

1. A minimum of one (1) LED driver for every ten (10) drivers (of the same type) installed.

A. Reference Section 26 05 00 – Basic Electrical Requirements for spare parts delivery and handling requirements.

1.08 LIGHTING CONTROLS

A. The lighting systems shall be controlled as specified herein and indicated on the Drawings.

1.09 WARRANTY

A. The manufacturer's warranty shall in no event be for a period of less than five (5) years from date of delivery of fixtures to the project site and shall include repair labor, travel expense necessary for repairs at the jobsite, shipping costs, expendables used during the course of repair, or complete replacement of the failed lighting unit.

B. Warranty shall be provided for the entire fixture and shall include all parts and accessories.. Submittals received without written warranties as specified shall be rejected in their entirety.

PART 2 – PRODUCTS

2.01 MANUFACTURERS

A. The equipment covered by this Specification is intended to be standard equipment of proven performance as manufactured by reputable concerns. Equipment shall be designed, constructed, and installed in accordance with the best practices of the trade, and shall operate satisfactorily when installed as shown on the Drawings.

B. The fixture schedule indicates the basis-of-design manufacturer(s) for each fixture type. The **ELECTRICAL SUBCONTRACTOR** shall submit photometric calculations for each space and/or area where the **ELECTRICAL SUBCONTRACTOR** wishes to use an equivalent fixture in accordance with Section 26 05 00 – Basic Electrical Requirements. Fixtures will be approved or denied as equivalent on a per-fixture and/or per-space/area basis.

2.02 FIXTURES

A. All lighting fixtures shall be furnished complete with all fittings and hardware necessary for a complete installation. Lighting fixtures shall have all accessories, characteristics, and functionality as specified.

B. Fixture leads shall be as required by NEC. Fixtures shall be grounded by the equipment grounding conductor in the conduit.

C. All glassware shall be high quality, homogeneous in texture, uniform in quality, free from defects, of uniform thickness throughout, and properly annealed. Edges shall be well rounded and free from chips or rough edges.

D. Emergency and exit fixtures shall be UL 924 Listed and have a minimum 90 minutes battery back-up.

E. Fixtures for use in hazardous locations shall be UL 844 Listed.

F. Fixtures specified to be damp or wet locations rated shall be UL 1598 Listed.

G. Fixtures shall be as specified in the schedule below[2][3]

Fixture Type	Fixture Wattage	Description	Basis of Design Mfr. and Model
LC1/ LP1/ LW1	67W (max)	Ceiling/Pendant/Wall-mounted (as indicated on the Drawings), 120-277VAC, LED light fixture, color temperature of 4000K, lineal ribbed frosted polycarbonate lens, medium distribution, gasketed frosted polycarbonate housing, stainless steel latches, 54-inch, 8000 lumen minimum. Wet location Listed. Mount LP1/LW1 9'-0" AFF unless otherwise noted on drawings.	Holophane EVT4 LED Series, or engineer approved equal.
LP2	49W (max)	Ceiling/Pendant/Wall-mounted (as indicated on the Drawings), 120-277VAC, LED light fixture, color temperature of 4000K, lineal ribbed frosted polycarbonate lens, wide distribution, gasketed frosted polycarbonate housing, stainless steel latches, 54-inch, 6000 lumen minimum. Wet location Listed. Mount LP2 12'-0" AFF.	Holophane EVT4 LED Series, or engineer approved equal.
LW2	71W (max)	Wall-mounted, 120-277VAC, full-cutoff LED light fixture, color temperature of 3000K, IESNA Type 3 Medium distribution, bronze A360-cast aluminum housing, 'P30' LED package, 7800 lumen minimum, and wet location Listed. Mount LW2 9'-0" AFF unless otherwise noted on drawings.	Holophane HLWPC2 Series, or engineer approved equal.
LW3	72W (max)	Wall-mounted, 120-277VAC, LED light fixture, color temperature of 4000K, prismatic borosilicate glass lens, IESNA Type III Medium distribution, gray die-cast aluminum housing, 8500 lumen minimum, and wet location Listed. Mount LW3 10'-0" AFF unless otherwise noted on drawings.	Holophane WCNG WallConnect LED, or engineer approved equal.
LW4	74W (max)	Wall-mounted with 35° universal arm mount, 120-277VAC, LED light fixture, color temperature of 4000K, 80 CRI, prismatic borosilicate frosted glass lens, wide distribution with uplight, corrosion-resistant gray cast aluminum housing, 10000 lumen minimum, and wet location listed. Mount LW4 10'-0" AFF unless otherwise noted on drawings.	Holophane Petrolux PXLW Series, or engineer approved equal.

2 Addendum No.3
3 Addendum No.5

Fixture Type	Fixture Wattage	Description	Basis of Design Mfr. and Model
LC4/ LP4	74W (max)	Ceiling/Pendant-mounted, 120-277VAC, LED light fixture, color temperature of 4000K, 80 CRI, prismatic borosilicate glass lens, wide distribution with uplight, corrosion-resistant gray cast aluminum housing, 10000 lumen minimum, and wet location listed. Mount LP4 12'-0" AFF unless otherwise noted on drawings.	Holophane Petrolux PXLW Series, or engineer approved equal.
LC5/ LP5	100W (max)	Ceiling/Pendant-Mounted, 120-277VAC, LED light fixture, color temperature of 4000K, 80 CRI, frosted, prismatic borosilicate glass lens, medium Distribution, gray cast aluminum housing, 12,000 lumen minimum, (Pendant mount) - furnish with hook and cord, L5-15P plug, and L5-15R receptacle, damp location listed. Mount LP5 15'-6" AFF to bottom of fixture unless otherwise noted on drawings.	Holophane Phuzion PHZ Series, or engineer approved equal.
LW6	83W (max)	Wall-mounted with 35° universal arm mount, 120-277VAC, LED light fixture, color temperature of 4000K, 80 CRI, prismatic borosilicate frosted glass lens, medium distribution with uplight, corrosion-resistant gray cast aluminum housing, 12,000 lumen minimum, and wet location Listed. Mount LW6 13'-6" AFF unless otherwise noted on drawings.	Holophane Petrolux PXHW Series, or engineer approved equal.
LW7	86W (max)	Wall mounted recessed LED pool/basin light fixture, suitable for underwater mounting, 120VAC, housing and door shall be heavy wall cast bronze construction, all hardware and niche to be stainless steel, cord to be submersible rated, provided with temperature sensing low water cut off, color temperature of 4100K, warm white, convex linear spread lens, wide flood distribution, 8700 lumen minimum, IP 68 rated up to three meters. Mount LW7 14'-0" above tank bottom.	Hydrel 4426 series, or engineer approved equal
LR1	15.9W (max)	Recessed troffer 120-277VAC, 2ft x 2ft LED light fixture, 3000K color temperature, 80CRI, 2000 lumen minimum, cold rolled steel, pre-painted housing, ribbed reflector, acrylic linear prismatic diffuser.	Lithonia 2VTL2 Series, or engineer approved equal.
LR2	23.2W (max)	Recessed troffer 120-277VAC, 2ft x 4ft LED light fixture, 3000K color temperature, 80CRI, 3200 lumen minimum, cold rolled steel, pre-painted housing, ribbed reflector, acrylic linear prismatic diffuser.	Lithonia 2VTL4 Series, or engineer approved equal.
LR3	27.7W (max)	Recessed troffer 120-277VAC, 2ft x 2ft LED light fixture, 35K/40K/50K switchable white color temperature, 80CRI, switchable 2500LM, 3200LM, 4000LM lumen output, cold rolled steel, pre-painted housing, ribbed reflector, satin white lens.	Lithonia CPX LED Switchable Series, or engineer approved equal.

Fixture Type	Fixture Wattage	Description	Basis of Design Mfr. and Model
LR4	8W (max)	Ceiling mounted LED light fixture, 120-277VAC with 0-10V dimming, color temperature of 3000K, 80 CRI, diffuse lens, aluminum frame with white finish with white flange, hyperbolic medium trim, 800 lumen minimum.	Indy LLP4 Series, or engineer approved equal.
LR5	15W (max)	Ceiling (junction box) mounted LED light fixture, 120VAC, color temperature of 3000K, 90 CRI, diffuse lens, tapered surface/box mount disc fixture, aluminum frame with white finish, 990 lumen minimum. **ELECTRICAL SUBCONTRACTOR** shall install per manufacturer requirements when located in wet locations such as restrooms or shower areas.	Juno SlimBasics JSBT Series, or approved equal.
LC6	6W per linear foot (max)	Ceiling mounted linear LED light fixture, Length as indicated on drawings, 120-277VAC, color temperature of 3000K, 80CRI, frosted clear acrylic lens, medium distribution, aluminum frame, architect selected finish, 600 lumen per linear foot minimum	Mark Architectural Lighting Slot 2 S2SD Series, or engineer approved equal.
LR6	5W (max)	Cove mounted linear LED light fixture, 1’-0” Length, 120-277VAC, color temperature of 3000K-5000K tunable white, 80CRI, frosted clear acrylic lens, wall wash distribution, aluminum frame with white finish, 600 lumen per linear foot minimum	Mark Architectural Lighting MKS101 Series, or engineer approved equal.
LR6A	14W (max)	Cove mounted linear LED light fixture, 1’-0” Length, 120-277VAC, color temperature of 3000K-5000K tunable white, 80CRI, frosted clear acrylic lens, wall 40x60, aluminum frame with white finish, 250 lumen per linear foot minimum	Mark Architectural Lighting MKS101 Series, or engineer approved equal.
LC7	6W per linear foot (max)	Ceiling mounted linear LED light fixture, Length as indicated on drawings, 120-277VAC, color temperature of 3000K, 80CRI, frosted clear acrylic lens, medium distribution, aluminum frame, architect selected finish, 600 lumen per linear foot minimum	Mark Architectural Lighting Slot 2 S2SD Series, or engineer approved equal.
LR7	32W (max)	Cove mounted linear LED light fixture, 4’-0” Length, 120-277VAC, color temperature of 3000K, 80CRI, frosted clear acrylic lens, wall wash distribution, aluminum frame with white finish, 600 lumen per linear foot minimum	Mark Architectural Lighting MKS101 Series, or engineer approved equal.
LR7A	14W (max)	Cove mounted linear LED light fixture, 4’-0” Length, 120-277VAC, color temperature of 3000K, 80CRI, frosted clear acrylic lens, 40x60 distribution, aluminum frame with white finish, 250 lumen per linear foot minimum	Mark Architectural Lighting MKS101 Series, or engineer approved equal.

Fixture Type	Fixture Wattage	Description	Basis of Design Mfr. and Model
LP8	15W (max)	Pendant-mounted, 120-277VAC, LED light fixture, tube style decorative architectural fixture, color temperature 3000K, 80CRI, 1.5” diameter, 30” fixture length with an overall height including power cable 8’-0”, clear silver aluminum gasketed housing,	Camman P8700 Tano Series, or engineer approved equal
LW8	37W (max)	Wall (yoke) mounted, 120-277VAC, LED light fixture, color temperature of 3000K, prismatic borosilicate glass lens, wide flood, 6x6 distribution, 5500 lumen minimum, bronze die cast aluminum housing, wet location Listed. Furnish and install fixture on equipment screening Pole. Mount LW8 7’-0” AFF.	Holophane Predator PSLED Series, or engineer approved equal.
LP9	15W (max)	Pendant-mounted, 120-277VAC, LED light fixture, tube style decorative architectural fixture, color temperature 3000K, 80CRI, 1.5” diameter, 30” fixture length with an overall height including power cable 9’-0”, clear silver aluminum gasketed housing.	Camman P8700 Tano Series, or engineer approved equal
LC10	4.8W per linear foot (max)	Ceiling-mounted, 120-277VAC, linear LED light fixture, length as indicated on drawings, direct standard output, color temperature 3000k, aluminum frame with bronze finish, 533 lumen per linear foot minimum, and wet location Listed. Manufacturer shall furnish wiring drawings	ALight Lino series LIN 3SP. or engineer approved equal
LP10	15W (max)	Pendant-mounted, 120-277VAC, LED light fixture, tube style decorative architectural fixture, color temperature 3000K, 80CRI, 1.5” diameter, 30” fixture length with an overall height including power cable 10’-0”, clear silver aluminum gasketed housing,	Camman P8700 Tano Series, or engineer approved equal
LW10	3W per linear foot (max)	Wall mounted linear LED light fixture, 6’-9” Length, 120VAC, color temperature of 3000K , static white high-efficacy, optimal illumination, furnish with standard and clear endcaps as required for continuous illumination, encapsulated translucent lens, , aluminum frame with bronze finish, black wire color, 283 lumen per linear foot minimum Mount LW10 above sign with 90 degree mounting arm. Wet location listed.	QTL VERS-ENCAPSULATED (06) series, or engineer approved equal
LP11	15W (max)	Pendant-mounted, 120-277VAC, LED light fixture, tube style decorative architectural fixture, color temperature 3000K, 80CRI, 1.5” diameter, 30” fixture length with an overall height including power cable 11’-0”, clear silver aluminum gasketed housing.	Camman P8700 Tano Series, or engineer approved equal

Fixture Type	Fixture Wattage	Description	Basis of Design Mfr. and Model
LP12	40W (max)	Pendant mounted linear LED light fixture, 4'-0" Length, 120VAC, color temperature of 3000K, 80CRI, frosted clear acrylic lens, direct distribution, aluminum frame with white finish, 400 lumen per linear foot minimum. Mount LP12 10'-0" to bottom of fixture.	Peerless Round 4 RD4MS Series, or engineer approved equal
LB1	65W (max)	Base-mounted 7'-0" away from flagpole, MVOLT, LED flagpole light fixture, specialty architectural flood, color temperature 3000K, 80CRI, clear watershed lens, 20 deg distribution, bronze aluminum housing, pole with knuckle mount, 8330 lumen minimum. Wet location Listed	Hydrel SAF14 LED series, or engineer approved equal
LB2	11W (max)	Base-mounted, 120VAC, LED sign light fixture, specialty architectural flood, color temperature 3000K, 80CRI, clear watershed lens, 45 deg distribution, bronze aluminum housing, pole with knuckle mount, 600 lumen minimum. Wet location Listed	Hydrel ASPEN series, or engineer approved equal
LL1	74W (max)	Pole-mounted, 120-277VAC, LED light fixture, color temperature of 3000K, 80 CRI, prismatic borosilicate glass lens, forward throw, corrosion-resistant gray cast aluminum housing, gray uplight shield, 10,000 lumen minimum, and wet location Listed. Furnish and install fixture on Pole Type C, reference Pole Schedule.	Holophane Petrolux PXLW Series, or engineer approved equal.
LL1A	74W (max)	Pole-mounted, 120-277VAC, LED light fixture, color temperature of 3000K, 80 CRI, prismatic borosilicate glass lens, medium distribution, corrosion-resistant gray cast aluminum housing, gray uplight shield, 10,000 lumen minimum, and wet location Listed. Furnish and install fixture on Pole Type B, reference Pole Schedule.	Holophane Petrolux PXLW Series, or engineer approved equal.
LL2	74W (max)	Pole-mounted with 35° universal arm mount, 120-277VAC, LED light fixture, color temperature of 4000K, 80 CRI, prismatic borosilicate glass lens, wide distribution, corrosion-resistant gray cast aluminum housing, gray uplight shield, 10,000 lumen minimum, and wet location Listed. Furnish and install fixture on Pole Type B, reference Pole Schedule.	Holophane Petrolux PXLW Series, or engineer approved equal.
LL3	67W (max)	Pole-mounted, 120-277VAC, full-cutoff LED light fixture, color temperature of 3000K, IESNA roadway Type 3 distribution, bronze die cast aluminum housing, 10,500 lumen minimum, house-side shield, wet location Listed. Furnish and install fixture on Pole Type A, reference Pole Schedule.	AEL Autobahn ATB0 Series, or Engineer approved equal.

Fixture Type	Fixture Wattage	Description	Basis of Design Mfr. and Model
XW1/ XC1	5W (sign)	Wall/ceiling mounted, red LED exit sign, 120/277VAC, black die cast aluminum housing, gasketed impact resistant polycarbonate cover, brushed aluminum stencil with field-selectable chevrons, single/double face as indicated on the drawings, brownout and surge protected, wet location Listed. Mount XW1 0'-6" above door.	Holophane DeLeon DLTLX Series, Chloride Hz Series or Emergilite IL Series.
XW3/ XC3	5W (sign)	Wall/ceiling mounted, red LED exit sign, 120/277VAC, extruded brushed aluminum finish, clear acrylic panels, red letters on mirrored panel, field-selectable chevrons, single/double face as indicated on the drawings, brownout and surge protected, damp location Listed. Mount XW3 0'-6" above door.	Lithonia EDG/EDGR Series, or Engineer approved equal.

2.03 LED DRIVERS

A. Drivers shall have a voltage range of 347-480V or 120-277 (as required) +/- 10% at a frequency 60Hz.

B. All drivers shall be designed to a power factor >90% with a total harmonic distortion THD <20% at full load.

C. Case temperature shall be rated for -40°C through +80°C.

D. Drivers shall have overheat protection, self-limited short circuit protection and overload protected.

E. Drivers shall be furnished with a fused primary.

F. Drivers shall have an output current ripple <30%

G. Drivers shall be manufactured by Philips, Advance, Universal or equal.

H. Drivers shall be UL Listed for damp location, UL1012, ROHS.

I. Drivers shall meet FCC 47 Sub Part 15.

J. All drivers shall be provided with ANSI/IEEE C62.41 Category C (10kV/5kA) surge protection.

2.04 LEDS

A. Luminaires provided with LED technology shall utilize high brightness LEDs with a group binning code of P and/or Q.

B. Color Temperature: as specified in fixture schedule.

C. Junction point shall be designed and manufactured to allow adequate heat dissipation.

D. LEDs shall be rated for 50,000 hours of life, minimum (based on IESNA L70).

2.05 POLES AND FOUNDATIONS

A. Poles shall be designed to withstand calculated wind force based on wind velocity in accordance with the provisions of the Building Code for the State or Commonwealth in which the project is located.

B. Pole mounted fixtures shall be mounted on poles as designated in the fixture schedule or as indicated on the Drawings. Poles shall have adequate handholes. Furnish and install weatherproof receptacles where indicated. All anchor bolts and nuts shall be hot-dipped galvanized steel.

C. The **ELECTRICAL SUBCONTRACTOR** shall furnish and install a concrete foundation for freestanding pole mounted fixtures as indicated on the Drawings and as required (e.g., site/roadway lighting). The **ELECTRICAL SUBCONTRACTOR** shall furnish and install structural anchorage/attachment, including mounting brackets where applicable, for pole mounted fixtures that are attached to a structure (e.g., clarifiers, aeration basins, etc.).

1. Foundation shall be designed and approved by a Professional Structural Engineer (PE) currently licensed in the State or Commonwealth in which the project is located. The wind design shall be in accordance with ASCE 7 and the Building Code for the State or Commonwealth in which the project is located. Submit signed and sealed calculations for review.

D. Poles shall be as specified in the pole schedule below and shall be furnished with fixture types where specified in the fixture schedule:

Pole Type	Description	Mfr. and Model
A	Round, bronze, base-mounted, tapered, 20 ft, bronze anodized aluminum pole. Pole foundation shall project 36 inches above finished grade.	As selected by fixture manufacturer

Pole Type	Description	Mfr. and Model
B	Round, , 8ft total height 316 stainless steel pole with bolted base plate for horizontal bolted attachment to structure, platform, or walkway. Pole shall be structure mounted and shall be completely independent of (with no attachment to) guardrails/handrails. Pole base section shall include two (2) integral trade size 1-inch NTP threaded conduit fittings and a supplementary grounding electrode conductor landing pad. Pole shall include a locking swivel joint or telescoping action that allows the pole and fixture to be lowered to an accessible height for ladder-free maintenance. Reference Standard Details for additional information. Coordinate all structural pole attachments with the Structural Engineer.	Swivelpole ST Series or Engineer approved equal.
C	Round, freestanding or structure-mounted (via a bolted base plate for attachment to concrete), 10ft 316 stainless steel pole. Pole shall include a locking swivel joint or telescoping action that allows the pole and fixture to be lowered to an accessible height for ladder-free maintenance. Provide concrete pole foundation. Pole foundation shall project six (6) inches above finished grade. Reference the Standard Details on the Drawings. Where shown on the Drawings to be located on a concrete slab/structure, foundation shall be omitted and pole shall be bolted to the slab/structure. Coordinate all structural pole attachments with the Structural Engineer.	Swivelpole ST or F Series or Engineer approved equal

2.06 LIGHTING CONTROLS

A. Lighting Contactor and Photocell

1. Furnish and install a lighting contactor and photocell combination to control lighting as indicated on the Drawings.

2. Lighting contactors shall be as manufactured by Eaton, the Square D Company, General Electric Company, or Siemens Energy and Automation, Inc. Lighting contactors shall be heavy duty industrial type with 30A minimum rating and shall have the number of contacts required. Contactor ampere rating shall be increased as required to suit the application. Contactor coil voltage shall be as indicated on the Drawings. Contactors shall be the electrically or mechanically held type as indicated on the Drawings. Contactors shall include fused integral control power transformers. Any auxiliary relays, or other devices required for proper operation shall be included.

3. Photocells shown on the Drawings that are not integral to a fixture shall be provided by the **ELECTRICAL SUBCONTRACTOR**. Photocells shall be rated for 120-277 VAC, 1800W, and be provided with 1/2” or 3/4” threads for box mounting.

4. In non-hazardous locations, lighting contactors shall be furnished with the following enclosure type and material of construction, dependent upon the designation of the area in which they are to be installed. Area designations are indicated on the Drawings.

AREA DESIGNATION	ENCLOSURE TYPE AND MATERIAL
Indoor Wet Process Area	NEMA 4X, Type 304 Stainless Steel
Indoor Dry Process Area	NEMA 12, Painted Steel
Indoor Dry Non-process Area	NEMA 1, Painted Steel
Indoor Type 1 Chemical Storage/Transfer Area	NEMA 4X, Fiberglass
Indoor Type 2 Chemical Storage/Transfer Area	NEMA 4X, Type 304 Stainless Steel
All Outdoor Areas	NEMA 4X, Type 304 Stainless Steel

5. Lighting contactors shall not be installed in hazardous locations.

B. Astronomical Time Switch System

1. Furnish and install astronomical time switch system(s) to control lighting as indicated on the Drawings. System shall be Model ET90000 as manufactured by Intermatic, or Engineer approved equal.

2. Integral programmable electronic astronomic controller shall be 365/7-day type, capable of permitting 48 ON and 48 OFF events, minimum. Controllers shall include selectable astronomic (dusk/dawn) settings for each day and each circuit to allow load switching at sunset and/or sunrise without a photo control device. Controller shall allow designation of the geographic location of the unit and whether the location participates in daylight savings time. Controllers shall operate on a 120 VAC, 60 Hz control power supply. The electronic controller shall be UL 916 Listed.

3. A minimum of four (4) SPST load switching contacts shall be provided, with the capacity to expand to up to 16 contacts. Reference Drawings to determine where more than the minimum number of load switching contacts may be required. Load switching contacts shall be rated for 20A (minimum) for LED type lighting loads and be suitable for 120VAC through 277VAC lighting loads. A USB port and Ethernet communication port, both accessible from outside the enclosure, shall be provided. Enclosure shall be NEMA 3R painted steel for all non-hazardous locations. Astronomical time switch systems shall not be installed in hazardous locations or Indoor Type 1 Chemical Storage/Transfer Areas.

PART 3 – EXECUTION

3.01 INSTALLATION

A. Lighting fixtures shall be located symmetrically with building lines as shown on the Drawings. The **ELECTRICAL SUBCONTRACTOR** shall furnish and install the lighting fixtures to allow "convenient" access for maintenance. The **ELECTRICAL SUBCONTRACTOR** shall install fixtures at mounting heights indicated on the Drawings or as instructed by the Engineer. In areas with exposed ducts and/or piping, installation of lighting fixtures shall be adapted to field conditions as determined by the Engineer. Where fixtures are shown in locations on the Drawings where maintenance would be difficult, the **ELECTRICAL SUBCONTRACTOR** shall notify the Engineer for direction.

B. The **ELECTRICAL SUBCONTRACTOR** shall provide and install all inserts, conduit, structural supports as required, mounting, poles, wiring, and any other items required for a complete system. **ELECTRICAL SUBCONTRACTOR** shall properly adjust and test, to the satisfaction of the Engineer, the entire lighting system. The **ELECTRICAL SUBCONTRACTOR** shall provide pigtails and flexible conduit connected to an outlet box where necessary or required resulting in a neat and complete installation.

C. The **ELECTRICAL SUBCONTRACTOR** shall protect all fixtures at all times from damage, dirt, dust, and the like. Upon completion of work, and after the building area is broom clean, all fixtures shall be made clean and free of dust and all other foreign matter both on visible surfaces, and on surfaces that affect the lighting performance of the fixture including diffusers, lenses, louvers, reflectors, etc.

D. The **ELECTRICAL SUBCONTRACTOR** shall furnish and install all pendant trapezes and pendant stem hangers with durable swivel or equivalent trapeze hanger permitting normal fixture motion and self-alignment. Fixture pendants shall be Appleton Type UNJ ball type flexible hanger at the fixture and supports from an Appleton JBLX junction box with JBLX hub cover, or equal. Pendant lengths shall be adequate and adjusted to provide uniformity of installation heights above the reference datum. Stems shall be one-piece, with matching canopies and fittings.

E. All wiring/cables associated with lighting equipment shall be installed in conduits or other raceways as specified. Installing wiring/cables exposed is not acceptable, unless specifically shown otherwise on the Drawings.

F. The **ELECTRICAL SUBCONTRACTOR** shall furnish and install recessed fixtures with a separate junction box concealed and located as to be accessible when fixture is removed.

G. The **ELECTRICAL SUBCONTRACTOR** shall furnish and install all boxes for lighting fixtures such that the box is not the sole support of the fixture. The boxes shall be offset to allow maintenance such that access to wiring within the box can be attained without having to consider supporting (holding) the fixture.

H. All lighting fixtures, when installed, shall be set true and be free of light leaks, warps, dents, and other irregularities. All hangers, cables, supports, channels, and brackets of all kinds for safely erecting this equipment in place, shall be furnished and erected in place by the **ELECTRICAL SUBCONTRACTOR**.

I. The **ELECTRICAL SUBCONTRACTOR** shall support each fixture securely. The **ELECTRICAL SUBCONTRACTOR** shall not secure fixtures to the work of other trades, unless specified or noted otherwise, and shall not support fixtures from plaster. The **ELECTRICAL SUBCONTRACTOR** shall furnish and install all members and supports as required to fasten and suspend fixtures from the structure.

J. In all mechanical equipment areas, the **ELECTRICAL SUBCONTRACTOR** shall install lighting fixtures after all piping and equipment therein has been installed. Exact locations for such fixtures may be determined by the Engineer on the site during the course of the work.

K. All fixtures that require physical adjustment shall be so adjusted in accordance with the directions of the Engineer. The **ELECTRICAL SUBCONTRACTOR** shall also adjust angular direction of fixtures as directed.

L. All optical control surfaces such as lenses and reflectors shall be safely and securely attached to fixtures and shall be easily and quickly removed and replaced for cleaning without the use of special tools.

M. Lighting contactors shall be provided in the enclosure type and material of construction required for the area in which it is installed. Reference the requirements in Part 2 herein, and the area designations indicated on the Drawings.

N. The **ELECTRICAL SUBCONTRACTOR** shall commission astronomical time switch systems with input from the Engineer and Owner about on/off scheduling. The commissioning shall also include setup of the device's geographic location and daylight savings time features.

3.02 TESTING

A. All tests shall be performed in accordance with the requirements of the General Conditions and Division 01. The following tests are required:

1. Certified Shop Tests

   a. The lighting fixtures shall be given routine factory tests in accordance with the requirement of ANSI, NEMA and Underwriters Laboratories standards.

2. Field Tests

   a. Field testing shall be done in accordance with the requirements specified in the General Conditions, Division 01, and NETA Acceptance Testing Specifications, latest edition.

END OF SECTION

NO TEXT ON THIS PAGE

ATTACHMENT AY – 28 13 00 ACCESS CONTROL

DIVISION 26

ELECTRICAL

(FILED SUB BID REQUIRED)

SECTION 28 13 00

ACCESS CONTROL[1][2]

PART 1 – GENERAL

1.1 FILED SUB-BID REQUIREMENTS

A. **This Section is part of the filed sub-bid for Division 26 – Electrical. See Section 26 05 00.**

1.2 THE REQUIREMENT

A. Furnish and install a complete access control system for the Water Treatment Building and Dewatering Building, including but not limited to control panels, communications, power supplies, proximity badge readers, door contact devices, vehicle pedestals, conduit, wiring, programming, and other components as required for a complete and operational system. Any material, equipment or service not specifically mentioned in this specification or shown on the Drawings, but required for proper performance and operation shall be provided.

B. The **ELECTRICAL SUBCONTRACTOR** shall coordinate all interfacing of this system with SWSC's existing cloud-based Genetec Security Center access control system. Functionality of the new access control additions shall match that of the existing system. All equipment and programming necessary to achieve the above shall be completely in the **ELECTRICAL SUBCONTRACTOR'S** scope.

C. The **ELECTRICAL SUBCONTRACTOR** shall include in his bid all costs for the access control system, as well as all of the necessary conduit, wire, supports, installation, etc.

D. All components used for the access control system shall be suitable for the area in which they are installed. System design shall utilize appropriate components (e.g. weatherproof devices, explosion-proof devices, etc.) as required, even if required components are not specifically indicated within Part 2 – Products herein.

E. Reference Division 08 Openings, Division 26 Electrical, and Division 40 Process Interconnections.

---

1 Addendum No.3
2 Addendum No.5

1.3 CODES AND STANDARDS

A. The system shall comply with all Federal, State/Commonwealth, and County laws or ordinances, as well as all applicable codes, standards, regulations, and/or regulatory agency requirements including the partial listing below:

1. UL 294 Access Control.

1.4 SUBMITTALS

A. In accordance with the procedures and requirements set forth in Division 01 the **ELECTRICAL SUBCONTRACTOR** shall obtain from the equipment manufacturer and submit the following:

1. Shop Drawings,

2. Operation and Maintenance Manuals,

3. Spare Parts List,

4. Manufacturer's Field Start-up Report, and

5. Manufacturer's Representative's Certification.

1.5 SHOP DRAWINGS

A. Each submittal shall be complete in all respects, incorporating all information and data listed herein and all additional information required for evaluation of the proposed equipment's compliance with the Contract Documents.

B. Partial, incomplete, or illegible submissions will be returned to the Electrical Subcontractor without review for re-submittal.

C. Shop drawings for each system shall include but not be limited to:

1. Control panel interior wiring diagrams, point-to-point wiring diagram showing the point of connection and terminal used for all electrical field connections in the system and field wiring color-coded scheme.

2. Descriptive bulletins and product data sheets for all devices in sufficient detail to permit comparison with the specifications inclusive of: manufacturer’s literature, illustrations, specifications, materials of construction, related engineering, data, and compliance with standards.

3. Location and layout drawings for all equipment associated with the equipment. Include control panel and device designations where applicable.

4. An input/output matrix defining the system operation. This matrix shall cross-reference each device to its corresponding opening(s) and indicate system operation.

5. Power supply, standby battery, and battery charger calculations for each power supply, configuration of standby batteries in the system, identifying both the non-alarm and alarm load associated with each, and demonstrating conformance to the requirements of these specifications relative to sizing/capacity of power supplies, chargers, and standby batteries as applicable.

6. Assembly and installation drawings.

7. Spare parts list.

8. Manufacturer’s warranty statement.

D. A Compliance, Deviations, and Exceptions (CD&E) letter. If the shop drawings are submitted without this CD&E letter, the submittal will be rejected. The letter shall include all comments, deviations and exceptions taken to the Drawings and Specifications by the **ELECTRICAL SUBCONTRACTOR** AND Equipment Manufacturer/Supplier. This letter shall include a copy of this Specification Section. In the left margin beside each and every paragraph/item, a letter "C", "D", or "E" shall be typed or written in. The letter "C" shall be for full compliance with the requirement. The letter "D" shall be for a deviation from the requirement. The letter "E" shall be for taking exception to a requirement. Any requirements with the letter "D" or "E" beside them shall be provided with a full typewritten explanation of the deviation/exception. Handwritten explanation of the deviations/exceptions is not acceptable. The CD&E letter shall also address deviations, and exceptions taken to each Drawing related to this Specification Section.

E. The shop drawing information shall be complete and organized in such a way that the Engineer can determine if the requirements of these specifications are being met. Copies of technical bulletins, technical data sheets from "soft-cover" catalogs, and similar information which is "highlighted" or somehow identifies the specific equipment items the **ELECTRICAL SUBCONTRACTOR** intends to provide are acceptable and shall be submitted.

F. If standard data and catalog literature is supplied, all furnished options shall be carefully highlighted and options not being furnished shall be carefully deleted with ‘strikethrough’ notations. Unclear information will cause rejection of the entire submittal.

1.6 OPERATION AND MAINTENANCE MANUALS

A. The **ELECTRICAL SUBCONTRACTOR** shall submit Operation and Maintenance manuals in accordance with the procedures and requirements set forth in Division 01. The manuals shall include:

1. Instruction books, descriptive bulletins, technical bulletins, application data booklets, and other applicable instructional information.

2. Recommended spare parts list.

3. Final as-built construction drawings included in the shop drawings incorporating all changes made during the completion of the project.

1.7 SPARE PARTS

A. The access control system shall be furnished with all spare parts as recommended by the equipment manufacturer. Spare parts shall be furnished in accordance with Division 01.

B. In addition to the manufacturer recommended spare parts, the **ELECTRICAL SUBCONTRACTOR** shall furnish the following minimum spare parts:

No. Required	Description
5% (minimum of 1)	Each type of door controller
5% (minimum of 1)	Each type of card reader
5% (minimum of 1)	Each type of card reader interface device
5% (minimum of 1)	Each type of input board
5% (minimum of 1)	Each type of output board
5% (minimum of 1)	Each type of power supply
5% (minimum of 1)	Each type of video intercom station
5% (minimum of 1)	Each type of request-to-exit motion device
5% (minimum of 1)	Each type of door contact device

C. The spare parts shall be packed in containers suitable for long-term storage, bearing labels clearly designating the contents and the pieces of equipment for which they are intended.

D. Spare parts shall be delivered at the same time as the equipment to which they pertain. The **ELECTRICAL SUBCONTRACTOR** shall properly store and safeguard such spare parts until completion of the Work, at which time they shall be delivered to the Owner.

E. Spare parts lists, included with the shop drawing submittal shall indicate specific sizes, quantities, and part numbers of the items to be furnished. Terms such as "1 lot of packing material" are not acceptable.

F. Parts shall be completely identified with a numerical system to facilitate parts inventory control and stocking. Each part shall be properly identified by a separate number. Those parts which are identical for more than one size shall have the same parts number.

G. Spare parts shall be identical and interchangeable with corresponding parts of installed system.

1.8 IDENTIFICATION

A. Each system component shall be identified with a unique identification number. A nameplate shall be securely affixed in a conspicuous place on each device. Nameplates shall be as specified in Section 26 05 53 – Identification for Electrical Systems.

B. Major components of equipment shall be identified with a permanently affixed nameplate bearing the manufacturer's name and address, and type or style and catalog number of the item.

C. Keys and locks shall be furnished with tags bearing stamped identification numbers. Cable and conduit runs shall be identified in accordance with Section 26 05 33.13 – Conduit for Electrical Systems, Section 26 05 19 – Low-Voltage Conductors and Cables, and Section 40 66 00 – Network and Communication Cable and Infrastructure.

1.9 QUALIFICATIONS OF INSTALLER

A. Prior to installation, the **ELECTRICAL SUBCONTRACTOR** shall submit data proving that he has successfully installed access control systems of the same type and design as specified herein. Submit the names and locations of at least two installations where such systems have been installed. The **ELECTRICAL SUBCONTRACTOR** shall indicate the type and design of these systems and certify that these systems have performed satisfactorily.

PART 2 – PRODUCTS

2.1 INTEGRATOR

A. For installation and integration of all items listed within this section, utilize one of the following approved Access Control Integrators for equipment and system integration:

1. Siemens Industry, Inc. (Bill.Dennehy@siemens.com, 860.262.3723).

2. Security 101 (john.santry@security101ne.com, 860.406.0438).

3. Aaron Associates (Carlos Nunez, 475.222.2711).

2.2 ACCESS CONTROL SYSTEM EQUIPMENT

A. Water Treatment Building Control Panel and Dewatering Building Control Panels:

1. Control panels shall consist of a microprocessor-based controller, card reader interface devices, input/output boards, power supply, batteries, power distribution, wiring, and cable management housed in a single lockable enclosure. Control

panel shall contain a 12 VDC battery back-up system. Provide system alert upon low battery.

2. Control panels shall have the capability to accept as a minimum all devices as shown on the Drawings for each system.

3. Control panels shall have a 12 VDC power supply and battery back-up system mounted in the panel enclosure.

4. Control panels shall communicate to the Genetec Security Center via a Genetec Synergis Cloudlink device. Alternatively, control panels can network together utilizing fiber connectivity with only a single panel connecting to Security Center with the Cloudlink device.

5. The controller(s) shall continuously monitor for system faults and indicate a fault to the central system. The controller(s) shall also be provided with a fire alarm system interface for automatic engaging or dis-engaging of security hardware during an alarm condition.

B. Proximity Card Readers

1. Readers shall be UL294 Outdoor and Indoor rated, IP65.

2. Readers shall generally be of standard width mounted in single-gang boxes. For readers installed for aluminum frame storefront openings, utilize narrow-profile readers for mounting on door mullions.

3. Reader shall have a nominal card reading range of 4 inches.

4. Reader shall communicate to card reader interface device (or controller) via RS-485.

C. Interconnecting Cable

1. Interconnecting cable shall be provided and installed per the manufacturer’s specifications. Bundled cable assemblies shall be acceptable.

2. Interconnecting cable shall be watertight and suitable for outdoor use.

3. Shall be NEC Type CM or CL3.

4. Shall be UL Listed.

D. Magnetic Door Contact

1. Provide double-pole, double-throw magnetic-type door switch devices. Maximum switching conditions shall be 175 VDC and 400mA.

2. Coordinate door contact devices with provided door hardware.

E. Request to Exit (REX) Device

1. Passive Infrared REX device shall have wide angle, long range lens to detect motion of exiting personnel.

2. Device shall operate at 9-16 VDC and utilize form-C output contacts for signaling to the respective card reader interface device.

F. Vehicle Pedestal

1. Pedestal shall contain provisions for dual proximity badge reader mounting.

a. Upper proximity reader shall be at a mounting height of 80”.

b. Lower proximity reader shall be at a mounting height of 39”.

c. Provide a weather hood compatible with the proximity badge reader and vehicle pedestal.

G. Power Requirements

1. Power supply to all components of the system shall be as required, furnished and installed by the **ELECTRICAL SUBCONTRACTOR**.

2. Booster power supplies shall be furnished and installed where required.

PART 3 – EXECUTION

3.1 INSTALLATION

A. The access control system shall be furnished and installed as shown on the Drawings and in accordance with the manufacturer's installation instructions. One (1) copy of these instructions shall be included with the equipment at time of shipment.

B. System and Control Wiring

1. All system wiring shall be furnished and installed by the **ELECTRICAL SUBCONTRACTOR**. All wiring shall be installed in conduit in accordance with Section 26 05 33.13 – Conduit for Electrical Systems. System wiring shall be installed separate from all other building wiring.

2. All system components shall be securely supported independent of the conduit system. Runs of conduit shall be straight, neatly arranged, properly supported, installed parallel and perpendicular to walls and partitions.

3. The sizes of the conductors shall be those specified by the manufacturer. Color coded wire shall be used. All wires shall be tagged at all junction points and shall be free from short circuits, earth connections (unless so noted on the system

drawings), and crosses between conductors. Final terminations between the Access Control panels and the system field devices shall be made under the direct supervision of a factory trained representative.

4. All wiring shall be installed by qualified individuals, in a neat and workmanlike manner, to conform to the Massachusetts Electrical Code.

5. The complete system electrical installation, and all auxiliary components, shall be connected to earth ground in accordance with the Massachusetts Electrical Code.

C. After completion of the installation, the **ELECTRICAL SUBCONTRACTOR** shall clean the inside and the outside of the access control equipment and shall remove all dirt and debris from the site.

3.2 TESTING

A. All tests shall be performed in accordance with the requirements of the General Requirements and Division 01. The following tests are required:

1. Witnessed Shop Tests

   a. None required.

2. Certified Shop Tests and Reports

   a. Submit description of proposed testing methods, procedures, and apparatus.

   b. Submit certified copies of all factory test reports.

3. Field Tests

   a. Field testing shall be done in accordance with the requirements specified in the General Conditions, Division 01 and the requirements of all applicable codes and standards.

   b. Reference Section 26 05 00 – Basic Electrical Requirements.

   c. All tests shall be performed in the presence of the Engineer and Owner. The **ELECTRICAL SUBCONTRACTOR** shall notify the Engineer at least 14 days before the performance and acceptance tests are to be conducted. A complete test report and letter of completion shall be submitted to the Engineer. The tests shall be performed by, or under the supervision of a qualified representative of the access control system manufacturer and shall include the following:

      1) Verify that the system is free of grounds or open circuits.

      2) Verify that all devices, stations, and transmitters are functioning as specified.

3) Test each device and circuit. Individually activate each station and verify correct operation, control panel response, and corresponding door hardware response.

4) Test battery backup systems for specified function and capacity.

d. Upon acceptance by the Owner, the completed system(s) shall be placed into service.

3.3 SERVICES OF MANUFACTURER'S REPRESENTATIVE

A. The **ELECTRICAL SUBCONTRACTOR** shall provide the services of a qualified manufacturer's factory-trained technical representative who shall adequately supervise the installation and startup of the equipment furnished under this Contract. The manufacturer's representative shall certify in writing that the equipment has been installed in accordance with the manufacturer's recommendations. No further testing or equipment startup may take place until this certification is accepted by the Owner.

B. The manufacturer’s technical representative shall perform all startup and field acceptance testing as specified herein.

C. The **ELECTRICAL SUBCONTRACTOR** shall provide training for the Owner’s personnel. Training shall be conducted by the manufacturer's factory-trained representative who shall instruct Owner’s personnel in operation and maintenance of all equipment provided under this Section. Training shall be provided for two (2) sessions of two (2) hours each. Training shall not take place until after the motor controllers have been installed and tested. Training shall be conducted at times coordinated with the Owner.

D. The services of the manufacturer's representative shall be provided for a period of not less than as follows:

1. One (1) trip of two (2) working days during installation of the access control system.

2. One (1) trip of two (2) working days to perform field acceptance testing of the access control system.

3. One (1) trip of one (1) working day two (2) months before the warranty expiration to identify any issues to be corrected under warranty.

4. One (1) trip of one (1) working day to perform training as specified herein.

E. Any additional time required to achieve successful installation and operation shall be at the expense of the **ELECTRICAL SUBCONTRACTOR**.

3.4 MANUFACTURER'S CERTIFICATION

A. A qualified, factory-trained manufacturer's representative shall certify in writing that the equipment has been installed, adjusted, and tested in accordance with the manufacturer's recommendations.

END OF SECTION

ATTACHMENT AZ – 28 23 00 VIDEO SURVEILLANCE

DIVISION 26

ELECTRICAL

(FILED SUB BID REQUIRED)

SECTION 28 23 00

VIDEO SURVEILLANCE[1][2]

PART 1- GENERAL

1.1 FILED SUB-BID REQUIREMENTS

A. **This Section is part of the filed sub-bid for Division 26 – Electrical. See Section 26 05 00.**

1.2 THE REQUIREMENT

A. Furnish and install a complete video surveillance system for the Water Treatment Building and Dewatering Building, including but not limited to cameras, controls, communications, fiber optic transmission and termination equipment, network equipment, power supplies, camera mounts, conduit, wiring, programming, and other components as required for a complete and operational system. Any material, equipment or service not specifically mentioned in this specification or shown on the Drawings, but required for proper performance and operation shall be provided.

B. The ELECTRICAL SUBCONTRACTOR shall coordinate all interfacing of this system with SWSC's existing Genetec Video Management system. Functionality of the new video surveillance additions shall match that of the existing system. All equipment and programming necessary to achieve the above shall be completely in the r's scope.

C. The ELECTRICAL SUBCONTRACTOR shall include in his bid all costs for the video surveillance system, as well as all of the necessary conduit, wire, supports, installation, etc.

D. All components used for the video surveillance system shall be suitable for the area in which they are installed. System design shall utilize appropriate components (e.g. weatherproof devices, explosion-proof devices, etc.) as required, even if required components are not specifically indicated within Part 2 – Products herein.

E. Reference Division 26 Electrical, and Division 40 Process Interconnections.

---

1 Addendum No.3
2 Addendum No.5

1.3 CODES AND STANDARDS

A. The system shall comply with all Federal, State/Commonwealth, and County laws or ordinances, as well as all applicable codes, standards, regulations, and/or regulatory agency requirements.

1.4 SUBMITTALS

A. In accordance with the procedures and requirements set forth in Division 01 the **ELECTRICAL SUBCONTRACTOR** shall obtain from the equipment manufacturer and submit the following:

1. Shop Drawings,
2. Operation and Maintenance Manuals,
3. Spare Parts List,
4. Manufacturer's Field Start-up Report, and
5. Manufacturer's Representative's Certification.

1.5 SHOP DRAWINGS

A. Each submittal shall be complete in all respects, incorporating all information and data listed herein and all additional information required for evaluation of the proposed equipment's compliance with the Contract Documents.

B. Partial, incomplete or illegible submissions will be returned to the **ELECTRICAL SUBCONTRACTOR** without review for re-submittal.

C. Shop drawings for each system shall include but not be limited to:

1. Descriptive bulletins and product data sheets for all devices in sufficient detail to permit comparison with the specifications inclusive of: manufacturer’s literature, illustrations, specifications, materials of construction, related engineering, data, and compliance with standards.
2. Location and layout drawings for all equipment associated with the equipment. Include panel and device designations where applicable.
3. Video storage calculations for each provided recorder (where applicable), demonstrating conformance to the requirements of these specifications and those of the SWSC.
4. Assembly and installation drawings.
5. Spare parts list.

6. Manufacturer’s warranty statement.

D. A Compliance, Deviations, and Exceptions (CD&E) letter. If the shop drawings are submitted without this CD&E letter, the submittal will be rejected. The letter shall include all comments, deviations and exceptions taken to the Drawings and Specifications by the **ELECTRICAL SUBCONTRACTOR** AND Equipment Manufacturer/Supplier. This letter shall include a copy of this Specification Section. In the left margin beside each and every paragraph/item, a letter "C", "D", or "E" shall be typed or written in. The letter "C" shall be for full compliance with the requirement. The letter "D" shall be for a deviation from the requirement. The letter "E" shall be for taking exception to a requirement. Any requirements with the letter "D" or "E" beside them shall be provided with a full typewritten explanation of the deviation/exception. Handwritten explanation of the deviations/exceptions is not acceptable. The CD&E letter shall also address deviations, and exceptions taken to each Drawing related to this Specification Section.

E. The shop drawing information shall be complete and organized in such a way that the Engineer can determine if the requirements of these specifications are being met. Copies of technical bulletins, technical data sheets from "soft-cover" catalogs, and similar information which is "highlighted" or somehow identifies the specific equipment items the **ELECTRICAL SUBCONTRACTOR** intends to provide are acceptable and shall be submitted.

F. If standard data and catalog literature is supplied, all furnished options shall be carefully highlighted and options not being furnished shall be carefully deleted with ‘strikethrough’ notations. Unclear information will cause rejection of the entire submittal.

1.6 OPERATION AND MAINTENANCE MANUALS

A. The **ELECTRICAL SUBCONTRACTOR** shall submit Operation and Maintenance manuals in accordance with the procedures and requirements set forth in Division 01. The manuals shall include:

1. Instruction books, descriptive bulletins, technical bulletins, application data booklets, and other applicable instructional information.

2. Recommended spare parts list.

3. Final as-built construction drawings included in the shop drawings incorporating all changes made during the completion of the project.

1.7 SPARE PARTS

A. The access control system shall be furnished with all spare parts as recommended by the equipment manufacturer. Spare parts shall be furnished in accordance with Division 01.

B. In addition to the manufacturer recommended spare parts, the **ELECTRICAL SUBCONTRACTOR** shall furnish the following minimum spare parts:

No. Required	Description
5% (minimum of 1)	Each type of camera
5% (minimum of 1)	Each type of camera mount

C. The spare parts shall be packed in containers suitable for long-term storage, bearing labels clearly designating the contents and the pieces of equipment for which they are intended.

D. Spare parts shall be delivered at the same time as the equipment to which they pertain. The **ELECTRICAL SUBCONTRACTOR** shall properly store and safeguard such spare parts until completion of the Work, at which time they shall be delivered to the Owner.

E. Spare parts lists, included with the shop drawing submittal shall indicate specific sizes, quantities, and part numbers of the items to be furnished. Terms such as "1 lot of packing material" are not acceptable.

F. Parts shall be completely identified with a numerical system to facilitate parts inventory control and stocking. Each part shall be properly identified by a separate number. Those parts which are identical for more than one size shall have the same parts number.

G. Spare parts shall be identical and interchangeable with corresponding parts of installed system.

1.8 IDENTIFICATION

A. Each system component shall be identified with a unique identification number. A nameplate shall be securely affixed in a conspicuous place on each device. Nameplates shall be as specified in Section 26 05 53 – Identification for Electrical Systems.

B. Major components of equipment shall be identified with a permanently affixed nameplate bearing the manufacturer's name and address, and type or style and catalog number of the item.

C. Cable and conduit runs shall be identified in accordance with Section 26 05 33.13 – Conduit for Electrical Systems and Section 40 66 00 – Network and Communication Cable and Infrastructure.

1.9 QUALIFICATIONS OF INSTALLER

A. Prior to installation, the **ELECTRICAL SUBCONTRACTOR** shall submit data proving that he has successfully installed video surveillance systems of the same type and design as specified herein. Submit the names and locations of at least two installations where such systems have been installed. The **ELECTRICAL SUBCONTRACTOR** shall indicate the type and design of these systems and certify that these systems have performed satisfactorily.

PART 2- PRODUCTS

2.1 INTEGRATOR

A. For installation and integration of all items listed within this section, utilize one of the following approved Video Surveillance Integrators for equipment and system integration:

1. Siemens Industry, Inc. (Bill.Dennehy@siemens.com, 860.262.3723).
2. Security 101 (john.santry@security101ne.com, 860.406.0438).
3. Aaron Associates (Carlos Nunez, 475.222.2711).

2.2 VIDEO SURVEILLANCE SYSTEM EQUIPMENT

A. Video Surveillance System:

1. Head-end equipment for Water Treatment Building and Dewatering Building shall include the following:

a) Patch panels, surge protection, and POE network switch(es) as required and as approved by SWSC. Switches will mount in rack enclosures provided under Division 40.

b) Rack-mounted NVR with storage sized per 1.04(C)3 of this specification.

B. Security camera

1. Cameras shall be suitable for installation outdoors, vandal resistant, and with minimum IP rating of IP65.

2. Cameras shall have at a minimum the following features and/or performance:

a) Operate and transmit data utilizing Power Over Ethernet (POE).

b) RGB CMOS image sensor.

c) Fixed lens with IR-corrected fixed focus and digital pan-tilt-zoom.

d) On-board memory and deep learning processing unit.

e) Horizontal Resolution: maximum 1920 x 1080.

f) Supported network protocols shall include: IPv4, IPv6, HTTP, HTTPS, HTTP/2, FTP, SMTP, UPnP, DNS, NTP, NTS, TCP, IGMP(v1/v2/v3), RTCP.

g) Video Streams: Minimum of 2.

h) Frame Rates: Up to 30 frames per second.

i) Video Encoding: H.264, H.265, or MJPEG.

j) Motion Detector: Built-in digital.

k) Be equipped with true day/night functionality.

l) Comply with all state and federal requirements for video surveillance equipment in municipal facilities.

m) Genetec equipment license.

C. Network Video Recorder

1. Rack-mounted, digital recorder.

2. Capable of supporting all cameras specified for the project, plus 25% future expansion.

3. Provide (20) bays with 8TB hard drives for storage.

4. Provide any and all system software required for operation, with no ongoing costs for the next two years included.

D. Interconnecting Cable

1. For cameras <100 meters from the head-end equipment, connect cameras utilizing Category 6 cable as specified in 40 66 00 - Network and Communication Cable and Infrastructure.

2. For cameras >100 meters from the head-end equipment, connect cameras utilizing fiber cable as specified in 40 66 00 – Network and Communication Cable and infrastructure with media conversion devices as specified in 40 66 00.01 - Network and Communication Equipment.

E. Camera Mount

1. Provide wall mounts compatible with the security cameras specified in 2.02(B).

2. Camera mounts shall be finished with products suitable for the installation environment. Coordinate color selection with the Engineer.

F. Power Requirements

1. Power supply to all components of the system shall be as required, furnished, and installed by the **ELECTRICAL SUBCONTRACTOR**.

2. Booster power supplies shall be furnished and installed where required.

PART 3- EXECUTION

3.1 INSTALLATION

A. The video surveillance system shall be furnished and installed as shown on the Drawings and in accordance with the manufacturer's installation instructions. One (1) copy of these instructions shall be included with the equipment at time of shipment.

B. System Wiring

1. All system wiring shall be furnished and installed by the **ELECTRICAL SUBCONTRACTOR**. All wiring shall be installed in conduit in accordance with Section 26 05 33.13 – Conduit for Electrical Systems. System wiring shall be installed separate from all other building wiring.

2. All system components shall be securely supported independent of the conduit system. Runs of conduit shall be straight, neatly arranged, properly supported, installed parallel and perpendicular to walls and partitions.

3. The sizes of the conductors shall be those specified by the manufacturer. Color coded wire shall be used. All wires shall be tagged at all junction points and shall be free from short circuits, earth connections (unless so noted on the system drawings), and crosses between conductors.

4. All wiring shall be installed by qualified individuals, in a neat and workmanlike manner, to conform to the Massachusetts Electrical Code.

5. The complete system electrical installation, and all auxiliary components, shall be connected to earth ground in accordance with the Massachusetts Electrical Code.

C. After completion of the installation, the **ELECTRICAL SUBCONTRACTOR** shall clean the inside and the outside of the video surveillance equipment and shall remove all dirt and debris from the site.

3.2 TESTING

A. All tests shall be performed in accordance with the requirements of the General Requirements and Division 01. The following tests are required:

1. Witnessed Shop Tests

   a) None required.

2. Certified Shop Tests and Reports

   a) Submit description of proposed testing methods, procedures, and apparatus.

   b) Submit certified copies of all factory test reports.

3. Field Tests

   a) Field testing shall be done in accordance with the requirements specified in the General Conditions, Division 01 and the requirements of all applicable codes and standards.

   b) Reference Section 26 05 00 – Basic Electrical Requirements.

   c) All tests shall be performed in the presence of the Engineer and Owner. The **ELECTRICAL SUBCONTRACTOR** shall notify the Engineer at least 14 days before the performance and acceptance tests are to be conducted. A complete test report and letter of completion shall be submitted to the Engineer. The tests shall be performed by, or under the supervision of a qualified representative of the fire alarm system manufacturer and shall include the following:

      1) Verify that the system is free of grounds or open circuits.

      2) Verify that all devices and network equipment are functioning as specified.

      3) Test each device and circuit.

      4) Test battery backup systems for specified function and capacity.

   d) Upon acceptance by the Owner, the completed system(s) shall be placed into service.

3.3 SERVICES OF MANUFACTURER'S REPRESENTATIVE

B. The **ELECTRICAL SUBCONTRACTOR** shall provide the services of a qualified manufacturer's factory-trained technical representative who shall adequately supervise the installation and startup of the equipment furnished under this Contract.

The manufacturer's representative shall certify in writing that the equipment has been installed in accordance with the manufacturer's recommendations. No further testing or equipment startup may take place until this certification is accepted by the Owner.

C. The manufacturer’s technical representative shall perform all startup and field acceptance testing as specified herein.

D. The **ELECTRICAL SUBCONTRACTOR** shall provide training for the Owner’s personnel. Training shall be conducted by the manufacturer's factory-trained representative who shall instruct Owner’s personnel in operation and maintenance of all equipment provided under this Section. Training shall be provided for two (2) sessions of two (2) hours each. Training shall not take place until after the motor controllers have been installed and tested. Training shall be conducted at times coordinated with the Owner.

E. The services of the manufacturer's representative shall be provided for a period of not less than as follows:

1. One (1) trip of two (2) working days to perform field acceptance testing of the video surveillance system.

2. One (1) trip of one (1) working day two (2) months before the warranty expiration to identify any issues to be corrected under warranty.

3. One (1) trip of one (1) working day to perform training as specified herein.

F. Any additional time required to achieve successful installation and operation shall be at the expense of the **ELECTRICAL SUBCONTRACTOR**.

3.4 MANUFACTURER'S CERTIFICATION

A. A qualified, factory-trained manufacturer's representative shall certify in writing that the equipment has been installed, adjusted, and tested in accordance with the manufacturer's recommendations.

END OF SECTION

ATTACHMENT BA – 28 46 20 FIRE ALARM SYSTEMS

DIVISION 26

ELECTRICAL

(FILED SUB BID REQUIRED)

SECTION 28 46 20

FIRE ALARM SYSTEMS[1]

PART 1 – GENERAL

1.1 FILED SUB-BID REQUIREMENTS

A. This Section is part of the filed sub-bid for Division 26 – Electrical. See Section 26 05 00.

1.2 THE REQUIREMENT

A. Furnish and install a complete addressable Fire Alarm System including networked control panels, annunciator, alarm initiating and indicating devices, conduit, wiring, and other components as required for a complete and operational system. A fire alarm system shall be installed under this Contract as shown on the Drawings. System shall be in conformance with the latest NFPA and UL Standards listed below. Furnish installation drawings, tools, and all labor required to complete the work as specified herein and indicated on the Drawings.

B. This is a performance specification. The **ELECTRICAL SUBCONTRACTOR** shall hire a licensed Professional Engineer, certified in fire protection in the State or Commonwealth in which the project is located, to review the requirements of this Section and design a fire alarm system in accordance with all applicable standards and current Building Code of the State or Commonwealth in which the project is located. The **ELECTRICAL SUBCONTRACTOR** shall submit the Drawings to the local Authorities having jurisdiction as described herein and coordinate the approval process. The **ELECTRICAL SUBCONTRACTOR** shall make any changes necessary and install any additional components required in order to receive approval, at no additional cost to the Owner.

C. System shall be capable of being monitored by both a central station monitoring system as well as the Owner's local SCADA system.

D. The **ELECTRICAL SUBCONTRACTOR** shall include in his bid all costs for the fire alarm system, as well as all of the necessary conduit, wire, supports, installation, etc.

---

1 Addendum No.5

E. All components used for the fire alarm system shall be suitable for the area in which they are installed. Fire alarm system design shall utilize appropriate components (e.g. weatherproof devices, explosion-proof devices, etc.) as required, even if required components are not specifically indicated within Part 2 – Products herein.

F. Reference Section 26 05 00 – Basic Electrical Requirements, Section 26 05 33.13 – Conduit for Electrical Systems, Section 26 05 19 – Low-Voltage Conductors and Cables, and Section 26 05 53 – Identification for Electrical Systems.

1.3 CODES AND STANDARDS

A. The system shall comply with all Federal, State/Commonwealth, and County laws or ordinances, as well as all applicable codes, standards, regulations, and/or regulatory agency requirements including the partial listing below:

1. National Fire Protection Association (NFPA) Publications:

   a. NFPA 71,

   b. NFPA 72,

   c. NFPA 90A, and

   d. NFPA 101.

2. Underwriter’s Laboratories (UL), Inc.

3. Factory Mutual (FM) System.

4. Massachusetts Electrical Code, Article 760.

1.4 SUBMITTALS

A. In accordance with the procedures and requirements set forth in Division 01 the **ELECTRICAL SUBCONTRACTOR** shall obtain from the equipment manufacturer and submit the following:

1. Shop Drawings,

2. Operation and Maintenance Manuals,

3. Spare Parts List,

4. Manufacturer's Field Start-up Report, and

5. Manufacturer's Representative's Certification.

B. Each submittal shall be identified by the applicable Specification Section.

090716

1.5 SHOP DRAWINGS

A. Each submittal shall be complete in all respects, incorporating all information and data listed herein and all additional information required for evaluation of the proposed equipment's compliance with the Contract Documents.

B. Partial, incomplete, or illegible submissions will be returned to the **ELECTRICAL SUBCONTRACTOR** without review for re-submittal.

C. Shop drawings for each system shall include but not be limited to:

1. Control panel interior wiring diagrams, point-to-point wiring diagram showing the point of connection and terminal used for all electrical field connections in the system and field wiring color-coded scheme.

2. Descriptive bulletins and product data sheets for all alarm indicating and initiating devices in sufficient detail to permit comparison with the specifications inclusive of: manufacturer’s literature, illustrations, specifications, materials of construction, related engineering, data and compliance with NFPA, FM, UL, and local standards.

3. A complete list identifying each addressable initiating device custom label, annunciator zone, notification appliance signaling zone, remote signaling and auxiliary function zone and the specific devices associated with each zone.

4. An input/output matrix defining the system operation. This matrix shall cross-reference each initiating device to its corresponding annunciator zones, notification appliance signaling zones, remote signaling zones and auxiliary function zones and indicate system operation in the event of each type of trouble condition recognized by the system. This matrix shall be in the format as shown in NFPA 72.

5. Power supply, standby battery, battery charger and NAC voltage drop calculations for each power supply, configuration of standby batteries in the system, identifying both the non-alarm and alarm load associated with each, and demonstrating conformance to the requirements of these specifications relative to sizing/capacity of power supplies, chargers, and standby batteries as applicable.

6. Assembly and installation drawings.

7. Spare parts list.

8. Manufacturer’s warranty statement.

9. Sample central station monitoring contract for Owner review.

10. A Compliance, Deviations, and Exceptions (CD&E) letter. If the shop drawings are submitted without this CD&E letter, the submittal will be rejected. The letter shall

include all comments, deviations and exceptions taken to the Drawings and Specifications by the **ELECTRICAL SUBCONTRACTOR** AND Equipment Manufacturer/Supplier. This letter shall include a copy of this Specification Section. In the left margin beside each and every paragraph/item, a letter "C", "D", or "E" shall be typed or written in. The letter "C" shall be for full compliance with the requirement. The letter "D" shall be for a deviation from the requirement. The letter "E" shall be for taking exception to a requirement. Any requirements with the letter "D" or "E" beside them shall be provided with a full typewritten explanation of the deviation/exception. Handwritten explanation of the deviations/exceptions is not acceptable. The CD&E letter shall also address deviations, and exceptions taken to each Drawing related to this Specification Section.

D. Submit drawings, calculations and system component data sheets as listed in the paragraphs above for approval to the Town of West Parish, Owners Insurance Underwriter, and/or any other Authorities Having Jurisdiction. Drawings and calculations shall be signed and sealed by the licensed Professional Engineer certified in fire protection in the State or Commonwealth in which the project is located.

E. Submit evidence that the equipment furnished complies with NFPA standards and satisfies all local codes for buildings in the appropriate Use Group as indicated on the building code sheets (Architectural Drawings).

F. The shop drawing information shall be complete and organized in such a way that the Engineer can determine if the requirements of these specifications are being met. Copies of technical bulletins, technical data sheets from "soft-cover" catalogs, and similar information which is "highlighted" or somehow identifies the specific equipment items the **ELECTRICAL SUBCONTRACTOR** intends to provide are acceptable and shall be submitted.

G. If standard data and catalog literature is supplied, all furnished options shall be carefully highlighted and options not being furnished shall be carefully deleted with ‘strikethrough’ notations. Unclear information will cause rejection of the entire submittal.

1.6 OPERATION AND MAINTENANCE MANUALS

A. The **ELECTRICAL SUBCONTRACTOR** shall submit Operation and Maintenance manuals in accordance with the procedures and requirements set forth in Division 01. The manuals shall include:

1. Instruction books, descriptive bulletins, technical bulletins, application data booklets, and other applicable instructional information,

2. Recommended spare parts list, and

3. Final as-built construction drawings included in the shop drawings incorporating all changes made during the completion of the project.

1.7 SPARE PARTS

A. The fire alarm system shall be furnished with all spare parts as recommended by the equipment manufacturer. Spare parts shall be furnished in accordance with Division 01.

B. In addition to the manufacturer recommended spare parts, the **ELECTRICAL SUBCONTRACTOR** shall furnish the following minimum spare parts:

No. Required	Description
5% (minimum of 1)	Each type of heat detector and smoke detector including base
5% (minimum of 1)	Each type of manual pull station and each type notification appliance
5% (minimum of 1)	Each type of zone addressable control and monitor relay module
5% (minimum of 1)	Each type of isolator module

C. The spare parts shall be packed in containers suitable for long-term storage, bearing labels clearly designating the contents and the pieces of equipment for which they are intended.

D. Spare parts shall be delivered at the same time as the equipment to which they pertain. The **ELECTRICAL SUBCONTRACTOR** shall properly store and safeguard such spare parts until completion of the Work, at which time they shall be delivered to the Owner.

E. Spare parts lists, included with the shop drawing submittal shall indicate specific sizes, quantities, and part numbers of the items to be furnished. Terms such as "1 lot of packing material" are not acceptable.

F. Parts shall be completely identified with a numerical system to facilitate parts inventory control and stocking. Each part shall be properly identified by a separate number. Those parts which are identical for more than one size shall have the same parts number.

G. Spare parts shall be identical and interchangeable with corresponding parts of installed system.

1.8 IDENTIFICATION

A. Each system component shall be identified with a unique identification number. A nameplate shall be securely affixed in a conspicuous place on each device. Nameplates shall be as specified in Section 26 05 53 – Identification for Electrical Systems.

B. Fire alarm terminal and junction boxes shall be identified in accordance with Article 760 of the MEC and painted red and stenciled “FIRE ALARM” preventing unintentional

interference with the signaling circuits during testing, servicing and additional modifications to the system.

C. Major components of equipment shall be identified with a permanently affixed nameplate bearing the manufacturer's name and address, and type or style and catalog number of the item.

D. Keys and locks shall be furnished with tags bearing stamped identification numbers. Cable and conduit runs shall be identified in accordance with Section 26 05 33.13 – Conduit for Electrical Systems and Section 26 05 19 – Low-Voltage Conductors and Cables.

1.9 QUALIFICATIONS OF INSTALLER

A. Prior to installation, the **ELECTRICAL SUBCONTRACTOR** shall submit data proving that he has successfully installed fire alarm systems of the same type and design as specified herein. Submit the names and locations of at least two installations where such systems have been installed. The **ELECTRICAL SUBCONTRACTOR** shall indicate the type and design of these systems and certify that these systems have performed satisfactorily.

PART 2 – PRODUCTS

2.1 MANUFACTURERS

A. To ensure that the Fire Alarm System is integrated, coordinated and compatible system, one (1) manufacturer shall furnish all components specified herein. The system shall be as manufactured by Johnson Controls, Desigo Fire Safety, Edwards EST 3, Notifier by Honeywell, or Siemens Fire Safety.

2.2 FIRE ALARM SYSTEM

A. Fire Alarm Control Panel (FACP) and Fire Alarm Annunciator Panel (FAAP).

1. Provide networkable FACPs and FAAP in the locations shown on the drawings.

2. System shall be non-coded supervised addressable initiating, with annunciators as indicated on Drawings. Each circuit shall be electrically supervised against disarrangement. Wiring shall be Class A. Each system shall be able to be wired for a minimum of 250 addressable devices.

3. Control panel shall be microprocessor based and use solid-state components to operate the system. Control panel shall contain a minimum 60 hour 24 VDC battery back-up system. Provide system reset switch, battery and alarm horn, indicating device test switches and alarm relays.

4. Panel shall have the capability to accept as a minimum all alarm initiating devices as shown on the Drawings for each system. The panel shall have a 1,000 point (minimum) capacity where (1) point equals (1) monitor (input) or (1) control (output).

5. Install auxiliary relays as required in the panel with a minimum of eight (8) 120 volt normally open alarm contact outputs for remote alarm annunciation. The relays shall energize when a fire alarm, trouble, or supervisory alarm occurs. Wire all relay contacts to terminal blocks for connection to field wiring.

6. In the event of total power loss and restoration, the status of the initiating devices and notification appliances shall remain unchanged. The entire fire alarm system shall be powered from the battery back-up system during a power loss.

7. The panel shall have a 24 VDC power supply mounted in the panel enclosure.

8. The fire alarm system manufacturer shall provide all logic and/or programming to the fire alarm control panel so the fire alarm system will operate as follows:

    a. When a fire alarm pull station is pulled the fire alarm system will immediately go into an alarm state and energize the alarm horns, strobe lights and the auxiliary relays for remote notification.

    b. The smoke detectors shall have an alarm verification feature to prevent nuisance alarms. In the event that a detector is activated and the alarm verification period has been exceeded, the fire alarm system shall go into an alarm state and energize the alarm horns, strobe lights and the auxiliary relay for remote notification.

9. The control panel shall also have all of the following features:

    a. Microprocessor based control.

    b. Factory programmed and field configurable.

    c. Alarm and trouble with 24-hour reminder.

    d. Signal silence inhibit.

    e. Alarm verification by device.

    f. Alarm, trouble, supervisory and verification last event records.

    g. One person test.

    h. Inherently power limited per MEC Article 760.

    i. UL Listed.

j. FM approved.

k. Dead front option for the enclosure.

l. Central station DACT and HVAC shutdown relays.

m. Hardware for central station monitoring via analog telephone line.

n. The control panel shall have voice annunciation capabilities. The control panel shall have a minimum of two (2) pre-recorded messages that can be activated in the event of a fire or other evacuation of the building. Buttons shall be provided for maintenance personnel to activate the pre-recorded evacuation messages.

10. Alphanumeric Display and System Controls: Panel shall include an LCD display to indicate alarm, supervisory, and component status messages and shall include a keypad for use in entering and executing control commands.

11. FACPs shall individually monitor sensors for calibration, sensitivity, and alarm condition, and shall individually adjust for sensitivity. The control unit shall determine the condition of each sensor by comparing the sensor value to the stored values.

12. Environmental Compensation: The FACPs shall maintain a moving average of the sensor's smoke chamber value to automatically compensate for dust, dirt, and other conditions that could affect detection operations.

13. Programmable Sensitivity: Smoke Sensors shall have 7 selectable sensitivity levels ranging from 0.2% to 3.7%, programmed and monitored from the FACP.

14. Sensitivity Testing Reports: The FACPs shall provide sensor reports that meet NFPA 72 calibrated test method requirements. The reports shall be capable of being printed for annual recording and logging of the calibration maintenance schedule.

15. The FACPs shall automatically indicate when an individual sensor needs cleaning. When a sensor's average value reaches predetermined values, three (3) progressive levels of reporting shall be provided. The first level shall indicate if a sensor is close to a trouble reporting condition and shall be indicated on the FACP (i.e. "ALMOST DIRTY"). If this indicator is ignored and the second level is reached, a "DIRTY SENSOR" condition shall be indicated at the FACP and subsequently a system trouble shall be reported. The sensor base LED shall glow steady giving a visible indication at the sensor location. The "DIRTY SENSOR" condition shall not affect the sensitivity level required to alarm the sensor. If this indicator is ignored and its average value increases to a third predetermined value, an "EXCESSIVELY DIRTY SENSOR" trouble condition shall be indicated at the FACP.

16. The FACPs shall continuously perform an automatic self-test on each sensor that will check sensor electronics and ensure the accuracy of the values being transmitted. Any sensor that fails this test shall indicate a "SELF TEST ABNORMAL" trouble condition at the FACPs.

B. Alarm Initiating Devices

1. Fire Alarm Pull Stations

a. Fire alarm pull stations shall comply with NFPA standards and be compatible with the Fire Alarm Control Panel.

b. Pull stations shall be double action addressable type that require an outer door to be operated to expose actuation handle.

c. Provide necessary control power, and any other modules required for operation integral with Fire Alarm Control Panel.

d. Provide weatherproof pull stations in outdoor areas or indoor wet process locations. Provide pull stations suitable for use in hazardous areas when installed in hazardous areas.

2. Smoke Detectors

a. Smoke Detectors shall comply with NFPA standards and shall be compatible with the Fire Alarm Control Panel.

b. Type: Smoke sensors shall be of the photoelectric or combination photoelectric/ heat type.

c. Spacing: In accordance with the manufacturer’s recommendations and the requirements of NFPA 72, however, in no case shall spacing exceed 30 ft. by 30 ft. per detector.

d. Proximity to Fixtures: Smoke detectors shall not be placed closer than 5 ft. from any vent entrance or discharge point.

e. Each sensor base shall contain an LED that shall flash each time it is scanned by the Control Unit (once every 4 seconds). In alarm condition, the sensor base LED shall be on steady.

f. Sensors shall include a communication transmitter and receiver in the mounting base having a unique identification and capability for status reporting to the FACP. Sensor address shall be located in base to eliminate false addressing when replacing sensors.

g. Each sensor shall be scanned by the FACP for its type identification to prevent inadvertent substitution of another sensor type. Upon detection of a wrong device, the control unit shall operate with the installed device at the default alarm settings for that sensor. The settings shall be 2.5% obscuration for the photoelectric sensor, 135-deg F and 15-deg F rate-of-rise for the heat sensor, and the FACP shall indicate a "Wrong Device" trouble condition.

h. The sensor's electronics shall be immune from nuisance alarms caused by EMI and RFI.

i. Plug-In Arrangement: Sensor and associated electronic components shall be mounted in a module that connects to a fixed base with a twist-locking plug connection. Base shall provide break-off plastic tab that can be removed to engage the head/base locking mechanism. No special tools shall be required to remove head once it has been locked. Removal of the detector head shall interrupt the supervisory circuit of the fire alarm detection loop and cause a trouble signal at the FACP.

j. Removal of the sensor head for cleaning shall not require the setting of addresses.

k. Provide detectors suitable for use in hazardous areas when installed in hazardous areas.

3. Duct Smoke Detectors

a. Duct smoke detectors shall have all the same features as a regular smoke detector except it shall be specifically designed to be installed in the supply or return ducts of the HVAC units where indicated on the HVAC Drawings. The detectors shall be rated for the size of duct in which it will be installed and the CFM of the air flow through it.

b. Location: Required where indicated on the HVAC Drawings and where required to meet all local and national codes.

c. Duct smoke detectors shall be furnished by the fire alarm system supplier under this Section, but shall be installed by the HVAC Subcontractor.

d. The Duct housing shall provide a supervised relay driver circuit for driving up to 15 relays with a single "Form C" contact rated at 7A@ 28VDC or 10A@ 120VAC. This auxiliary relay output shall be fully programmable. Relay shall be mounted within 3 feet of HVAC control circuit.

e. Duct housing shall provide a relay control trouble indicator Yellow LED.

f. Duct housing shall have a transparent cover to monitor for the presence of smoke. Cover shall secure to housing by means of captive fastening screws.

g. Duct housing shall provide two (2) test ports for measuring airflow and for testing. These ports shall allow aerosol injection in order to test the activation of the duct smoke sensor.

h. Each duct smoke sensor shall have a remote test station with an alarm LED and test switch.

4. Heat Detectors

a. Heat detectors shall comply with NFPA standards and shall be compatible with the Fire Alarm Control Panel.

b. Spacing: In accordance with the manufacturer's recommendations and the requirements of NFPA 72.

c. Addressable heat detectors shall be ambient compensated combination rate-of-raise and fixed temperature type. The fixed temperature operation of the sensor shall be selectable for either 117 or 135°F. Rate-of-rise operation shall be selectable for either 15 or 20°F per minute and shall be self-restorable.

d. Heat detectors shall be addressable and shall be of the epoxy encapsulated electronic design. Detectors shall be thermistor-based, rate-compensated, self-restoring and shall not be affected by thermal lag.

e. Provide detectors suitable for use in hazardous areas when installed in hazardous areas.

C. Alarm Indicating Devices

1. Fire Alarm Horns

a. Fire alarm horns shall comply with NFPA, UL Standards, all local codes and be compatible with the Fire Alarm Control Panel.

b. Piezoelectric type horn shall be listed to UL 464. The horn shall have a minimum sound pressure level of 85 dBA @ 24VDC. The horn shall mount directly to a standard single gang, double gang or 4" square electrical box, without the use of special adapter or trim rings.

c. Provide horns suitable for use in hazardous areas when installed in hazardous areas.

2. Strobe Lights

a. Strobe Lights shall comply with NFPA, UL standards and be compatible with the Fire Alarm Control Panel.

b. Strobe lights shall have the words “FIRE” on it and comply with NFPA.

c. Strobe shall be listed to UL 1971. The strobe shall consist of a xenon flash tube and associated lens/reflector system. The strobe enclosure shall mount directly to standard single gang, double gang or 4" square electrical box, without the use of special adapters or trim rings. strobe appliances shall be provided with different minimum flash intensities of 15cd, 30cd, 75cd and 110cd. Candela intensity shall be field adjustable. Provide an indicator inside the strobe lens to indicate the listed candela rating of the specific strobe appliance.

d. Provide units suitable for use in hazardous areas when installed in hazardous areas.

3. Audible/Visible Devices

a. Combination Audible/Visible (A/V) Notification Appliances shall be listed to UL 1971 and UL 464. The strobe light shall consist of a xenon flash tube and associated lens/reflector system. A/V appliances shall be provided with different minimum flash intensities of 15cd, 30cd, 75cd and 110cd. Candela intensity shall be field adjustable. Provide an indicator inside the strobe lens to indicate the listed candela rating of the specific A/V appliance. The audible device shall be meet the requirements of the audible devices previously described. The audible/visible enclosure shall mount directly to standard single gang, double gang or 4" square electrical box, without the use of special adapters or trim rings.

b. Provide units suitable for use in hazardous areas when installed in hazardous areas.

D. System Addressable Interface Devices

1. Control Module, (addressable relay) - The control modules shall be programmable by the FACP and installed where required. The control module shall be a line powered module and relay contact shall be capable of switching up to 2A @ 30 Vdc.

2. Monitor Module (addressable input) - The monitor modules shall be installed where required and monitor normally open contacts and shall be programmed for a variety of input types as defined in the system programming.

E. Power Requirements

1. Power supply to all components of the system shall be as required, furnished and installed by the **ELECTRICAL SUBCONTRACTOR**.

2. Booster power supplies shall be furnished and installed where required.

F. Fire Alarm Control Panel Cellular Interface

1. The Fire Alarm Control Panel Cellular Interface shall provide access to a Remote Supervising Station for monitoring of system alarms, troubles, and supervisory conditions as required and approved by the local AHJ and shall transmit those signals from the fire panel over the digital cellular network to the designated monitoring station.

2. Unit shall meet UL 864 requirements for sole, primary, or backup path communications and shall support virtually all alarm formats for universal panel compatibility and shall serve as the sole communications path for the fire alarm system, replacing any of the landlines normally dedicated to the fire alarm control unit.

3. The unit shall provide multi-tower assessment to inform the installer if the unit can see multiple cell towers for redundancy. It shall also include SMS backup to reduce false alarms and provide self-tests using SMS if GPRS fails. Automatic self-tests of 5 minutes and daily with central monitoring station notification shall ensure the cellular system is operating and an available relay output for tripping the alarm control panel when a trouble condition occurs shall be provided.

4. Power for the unit shall be via a UL listed plug-in transformer rated 12VAC, 800mA. Cellular transmit power shall be 1.0W-2.0W and unit power consumption shall be 60mA standby and 250mA transmission. The radio transceiver shall be dual band cellular and PCS with GSM frequency and power of 850MHz: Class 4 (2 watts) and additional GSM frequency and power of 1900MHz: Class 1 (1 watt). Provide an externally mountable antenna. Antenna shall be 9” dipole with 2dBi gain with 20 ft. of cable and universal mounting bracket. Unit shall be registered under FCC part 15, 22, 24 and 68 compliant.

5. The unit shall be furnished in a wall-mounted, locking, red metal enclosure. Operating Environment shall be 32°F to 120°F; up to 95% humidity (non-condensing). An internal power supply with battery harness and backup batteries shall be provided. Two programmable supervisory trip outputs shall be provided with alarm format support for SIA2, Contact I D, pulse (3x1, 4x2), modem II e, & III a2, and DMP.

PART 3 – EXECUTION

3.1 INSTALLATION

A. The fire alarm system shall be furnished and installed as shown on the Drawings and in accordance with the manufacturer's installation instructions. One (1) copy of these instructions shall be included with the equipment at time of shipment.

B. System and Control Wiring

1. All system wiring shall be furnished and installed by the **ELECTRICAL SUBCONTRACTOR**. All wiring shall be installed in conduit in accordance with Section 26 05 33.13 – Conduit for Electrical Systems. System wiring shall be installed separate from all other building wiring.

2. All system components shall be securely supported independent of the wiring. Runs of conduit and wiring shall be straight, neatly arranged, properly supported, installed parallel and perpendicular to walls and partitions.

3. The sizes of the conductors shall be those specified by the manufacturer. Color coded wire shall be used. All wires shall be tagged at all junction points and shall be free from short circuits, earth connections (unless so noted on the system drawings), and crosses between conductors. Final terminations between the FACPs and the system field devices shall be made under the direct supervision of a factory trained representative.

4. All wiring shall be installed by qualified individuals, in a neat and workmanlike manner, to conform to the Massachusetts Electrical Code, Article 725, and Article 760, except as otherwise permitted for limited energy circuits, as described in NFPA 72 latest edition.

5. The complete system electrical installation, and all auxiliary components, shall be connected to earth ground in accordance with the Massachusetts Electrical Code.

C. Mount the Fire Alarm Control Panel such that the height of the top operating handle or knob does not exceed 6 ft. from the floor.

D. After completion of the installation, the **ELECTRICAL SUBCONTRACTOR** shall clean the inside and the outside of the fire alarm system equipment and shall remove all dirt and debris from the site.

3.2 TESTING

A. All tests shall be performed in accordance with the requirements of the General Requirements and Division 01. The following tests are required:

1. Witnessed Shop Tests

   a. None required.

2. Certified Shop Tests and Reports

   a. Submit description of proposed testing methods, procedures, and apparatus.

   b. Submit certified copies of all factory test reports.

3. Field Tests

a. Field testing shall be done in accordance with the requirements specified in the General Conditions, Division 01 and the requirements of all applicable codes and standards.

b. Reference Section 26 05 00 – Basic Electrical Requirements.

c. All tests shall be performed in the presence of the Engineer and Owner. The **ELECTRICAL SUBCONTRACTOR** shall notify the Engineer at least 14 days before the performance and acceptance tests are to be conducted. A complete test report and letter of completion shall be submitted to the Engineer. The tests shall be performed by, or under the supervision of a qualified representative of the fire alarm system manufacturer and shall include the following:

1) Verify that the system is free of grounds or open circuits. The FACPs shall indicate when a ground or an open circuit exists.

2) Verify that all alarm signal devices, stations, transmitters, automatic detectors, and supervisory devices are functioning as specified.

3) Test each fire alarm device and circuit. Individually activate each manual initiating station and verify correct alarm operation and control panel response. Individually test each automatic initiating device and verify correct alarm operation, control panel response, and remote equipment operation.

4) Test battery backup systems for specified function and capacity.

d. The **ELECTRICAL SUBCONTRACTOR** shall contact the local Building Department for final approval of the system and demonstrate the system to the Fire Department for approval.

e. If approval is denied by the Fire Department, then the installer shall make any changes necessary, at no additional cost to the Owner, to get approval as part of this scope. After any modifications have been made, if necessary, the installer shall demonstrate the system again to the Fire Department in order to get approval.

f. Coordinate testing of fire alarm system with fire suppression system testing.

g. Upon acceptance by the Owner, the completed system(s) shall be placed into service.

3.3 SERVICES OF MANUFACTURER'S REPRESENTATIVE

A. The **ELECTRICAL SUBCONTRACTOR** shall provide the services of a qualified manufacturer's factory-trained technical representative who shall adequately supervise

the installation and startup of the equipment furnished under this Contract. The manufacturer's representative shall certify in writing that the equipment has been installed in accordance with the manufacturer's recommendations. No further testing or equipment startup may take place until this certification is accepted by the Owner.

B. The manufacturer’s technical representative shall perform all startup and field acceptance testing as specified herein.

C. The **ELECTRICAL SUBCONTRACTOR** shall provide training for the Owner’s personnel. Training shall be conducted by the manufacturer's factory-trained representative who shall instruct Owner’s personnel in operation and maintenance of all equipment provided under this Section. Training shall be provided for two (2) sessions of two (2) hours each. Training shall not take place until after the motor controllers have been installed and tested. Training shall be conducted at times coordinated with the Owner.

D. The services of the manufacturer's representative shall be provided for a period of not less than as follows:

1. One (1) trip of two (2) working days during installation of the fire alarm system.

2. One (1) trip of two (2) working days to perform field acceptance testing of the fire alarm system.

3. One (1) trip of one (1) working day two (2) months before the warranty expiration to identify any issues to be corrected under warranty.

4. One (1) trip of one (1) working day to perform training as specified herein.

E. Any additional time required to achieve successful installation and operation shall be at the expense of the **ELECTRICAL SUBCONTRACTOR**.

3.4 MANUFACTURER'S CERTIFICATION

A. A qualified, factory-trained manufacturer's representative shall certify in writing that the equipment has been installed, adjusted, and tested in accordance with the manufacturer's recommendations.

END OF SECTION

ATTACHMENT BB – 31 00 01 EARTHWORK

SECTION 31 00 01

EARTHWORK[1]

PART 1 - GENERAL

1.01 GENERAL PROVISIONS

A. Attention is directed to all Sections within DIVISION 0 BIDDING REQUIREMENTS, CONTRACT FORMS AND CONDITIONS OF THE CONTRACT and DIVISION 01-GENERAL REQUIREMENTS which are hereby made a part of this Section of the Specifications. Examine all Sections of the Specifications for requirements which affect work of this Section, whether or not such work is specifically mentioned in this Section.

B. The Contractor shall coordinate Work with that of all other trades or contracts affecting or affected by Work of this Section. Cooperate with such trades to assure the steady progress of all Work under the Contract.

1.02 DESCRIPTION OF WORK

A. The Contractor shall rovide all labor, materials and equipment necessary to complete the work shown on the Contract Drawings and as specified in this Section, without limiting the generality thereof, including:

1. Layout and grades.

2. Development and adherence to a Materials Removal, Stockpile, and Disposal Plan for handling, segregating, stockpiling, sampling and reusing or disposing of soil/material encountered during excavation.

3. Demolition and removal of two existing Regulator Buildings and the majority of Slow Sand Filters (SSF) 7 through 10 and SSF 15 through 18.

4. Installation of temporary support-of-excavation (SOE) systems to temporarily support existing utilities, roads, buildings, and other structures. Refer also to the requirements of Section 31 50 00.

5. Dewatering to perform the work in the “dry”. Refer also to the requirements of Section 31 23 19.

6. Soil and bedrock excavation necessary to achieve proposed subgrades.

---

[1] Addendum No. 5

7. Excavation of existing Unsuitable Fill and any disturbed subgrade soils to naturally-deposited and undisturbed Glacial Till, Weathered Bedrock, or Bedrock.

8. Excavations for mat slab and foundation subgrades and other structures.

9. Preparing subgrades for trenches, utilities, equipment pads, structures, foundations, walks, pavements, turf and grasses and plants.

10. Provision, transportation and placement of all required fill and backfill materials.

11. Backfilling subgrades with Structural Fill to meet bottom of mat slab and foundation elevations.

12. Installation of new permanent and temporary utilities.

13. Backfilling and filling around structures to meet proposed grades.

14. Excavating and backfilling trenches for utilities and pits for buried utility structures.

15. Compaction of fill and backfill.

16. Stockpiling and disposal of stockpiled excavated materials, including segregating, handling, materials management, stockpile covering, analytical testing, BOL, LSP requirements, transportation, and disposal at an appropriately licensed facility.

17. Design, installation and removal (or abandonment, if allowed by the Owner) of temporary earth support and dewatering systems.

18. Cooperate with the Engineer conducting field testing and general earthwork observation activities.
19. Conducting all work in accordance with OSHA requirements and other applicable laws and regulations, and with the requirements of all federal, state, and local agencies and authorities having jurisdiction over the work.
20. Sequencing all work to keep the existing facilities in operation and not to interfere with onsite operations. Sequencing all work as needed to perform the work efficiently.
21. The Contractor shall comply with State and local regulations (including, but not limited to USDA, NRCS 378), as well as the project specifications, pertaining to fill placement and compaction. The more stringent apply.

1.03 PROJECT CONDITIONS

A. The Site has limited available area for storage, laydown, or maneuvering. No additional payment shall be made due to insufficient laydown, storage or maneuvering area. The Contractor has the opportunity to visit the Site to review working conditions and to verify dimensions in the field during the bidding phase. Notify engineer in writing of any discrepancy before performing any work.

B. The Contractor shall provide edrock removal by perforation drilling and mechanical (hydraulic hammering) methods. The Contractor shall provide edrock removal by perforation drilling and chemical splitting methods, over an existing bedrock tunnel. Chemical or hydraulic splitting of bedrock is required within 50 feet of the existing bedrock tunnel that is located adjacent to the existing EDV Structure (hydraulic hammering not allowed within 50 feet of the bedrock tunnel).

C. Blasting at the Site is prohibited.

D. Proposed construction will include the items listed below. The excavation depths are approximate and it is the Contractor's responsibility to review the Project documents for excavation depths and limits based on means and methods. The Drawings supersede references to excavation limits below.

1. Installation of Raw Water Main adjacent to existing Slow Sand Filters No. 12 and 14 to remain, beneath Cook Brook, in proximity to West Parish Filter Dam #3, and over an existing bedrock tunnel adjacent to the existing EDV Structure. Existing tunnel drawings, Slow Sand Filter drawings, and dam inspection reports are listed under Section 01 11 00 and can be provided upon request. .

2. Demolition of majority of the backwash tank (formally Slow Sand Filter No. 7), the sand storage (formally Slow Sand Filter No. 8), Slow Sand Filters 9 through 10 and 15 through 18 and support of existing infrastructure to keep the facility in operation. Existing Slow Sand Filter drawings are listed under Section 01 11 00 and can be provided upon request.

3. Wash Water Tank with a proposed foundation approximately 50 feet below existing grade. The lowest level of the proposed Wash Water Tank is at a lower elevation than the Dewatering Building; Contractor must sequence the work to avoid underpinning the new Dewatering Building. No additional payment shall be made due to inefficient or inadequate sequencing and performance of the work.

4. Water Treatment Building with a proposed foundation up to about 20 feet below existing grade.

5. Dewatering Building with a proposed foundation up to about 20 to 25 feet below existing grade.

6. Centrate Tank with a proposed foundation up to about 20 feet below existing grade.

7. Stormwater wetland and bioretention cells.

8. Connections to existing transmission mains at various locations around the site up to about 30 feet below grade.

E. The Contractor shall e responsible for any damage caused by construction activities, including but not limited to damage to existing structures, roadways, dams, tunnels,

buildings, and utilities, and shall repair any damage to the satisfaction of the Engineer and at no cost to the Owner.

F. Any data concerning site size, access to site, staging and storage, obstructions on or near the site, locations and depth of utilities, foundations, conduits or pipes, position of sidewalks, curbs and pavements, and all other data concerning site conditions have been obtained from sources the Owner believes reliable; but the accuracy of such data is not guaranteed and is furnished solely for accommodation of the Contractor. It is expressly understood that the Owner, Owner's Agent, or Engineer will not be responsible for interpretations or conclusions drawn therefrom by the Contractor. Use of such data is made at the Contractor's sole risk, cost and expense.

G. Plans, surveys, measurements and dimensions under which the work is to be performed are believed to be correct, but the Contractor shall have examined them for themselves during the bidding period, as no additional compensation will be made for errors and inaccuracies that may be found therein. By submitting a bid, the Contractor affirms that they have carefully examined the site, all available information pertinent thereto, and all conditions effecting work under this section.

H. Contractor shall conduct the construction activities in such a manner that erosion of disturbed areas and off-site sedimentation do not occur.

I. Earthwork performed under this Contract shall be done in conformance with these specifications. Items and activities not addressed herein shall be subject to the limitations of the latest editions of the Commonwealth of Massachusetts Department of Transportation (MassDOT) Standard Specifications for Highways and Bridges. If there is a conflict between this specification and the MassDOT Standard Specifications, the more conservative of the two shall take precedent.

J. Erosion and Sediment Control shall be performed by the Contractor in accordance with Section 31 25 00 of these specifications and with the latest edition of the Massachusetts Erosion and Sediment Control Guidelines for Urban and Suburban Areas. If there is a conflict between this specification and the Erosion and Sediment Control Guidelines, the more conservative of the two shall take precedent.

1.04 RELATED SECTIONS

A. Section 01 45 23 – TESTING SERVICES FURNISHED BY OWNER

B. Section 31 05 19 - GEOTEXTILES

C. Section 31 50 00 – SUPPORT OF EXCAVATION

D. Section 31 23 19 – DEWATERING

E. Section 31 25 00 – EROSION AND SEDIMENTATION CONTROL

1.05 REFERENCE STANDARDS

A. Massachusetts Highway Department, Standard Specifications for Highways and Bridges, latest edition.

B. Massachusetts State Building Code 9th Edition, with Amendments to the IBC 2015

C. Massachusetts Erosion and Sediment Control Guidelines for Urban and Suburban Areas

D. Massachusetts Wetlands Protection Act, Chapter 131, Section 40

E. International Building Code (IBC) 2015

F. American Society for Testing and Materials (ASTM) Standards:

1. ASTM C136 - Method of sieve analysis of fine and coarse aggregates.

2. ASTM C117 - Standard test method for materials finer than No. 200 sieve in mineral aggregate washing.

3. ASTM D422 - Standard test method for particle size analysis of soils.

4. ASTM D1140 - Test for amount of material in soils finer than the No. 200 sieve.

5. ASTM D1557 - Test methods for moisture-density relations of soils and soil aggregate mixtures using 10 lb. hammer and 18-inch drop. AASHTO Standard T-180 may be substituted for ASTM D1557.

6. ASTM D2922 - Test methods for density of soil and soil-aggregate in place by nuclear methods (shallow depth).

7. ASTM D 6938 – Standard Test Method for In-Place Density and Water Content of Soil and Soil Aggregate by Nuclear Methods (Shallow Depth).

8. ASTM D 2487 – Practice for Classification of Soils for Engineering Purposes (Unified Soil Classification System).

9. ASTM D4318 - Test method for liquid limit, plastic limit and plasticity index of soils.

G. Occupational Safety and Health Administration (OSHA):

1. Regulations, 29 CFR Part 1926 - Including, but not limited to, Excavations and Excavation Support, Current Revision.

1.06 DEFINITIONS

A. Backfill: Soil material or controlled low-strength material (flow fill) used to fill an excavation.

B. Base Course: Aggregate layer placed between the subbase course and hot-mix asphalt paving.

C. Bedding Course: Aggregate layer placed over the excavated subgrade in a trench before laying pipe.

D. Borrow Soil: Satisfactory soil imported from off-site for use as fill or backfill. Borrow soil shall not be contaminated or recycled or contain man-made materials.

E. Rock: Rock material in beds, ledges, unstratified masses, conglomerate deposits, and boulders of rock material that exceed 1 cu. yd. (0.76 cu. m) for bulk excavation or 3/4 cu. yd. (0.57 cu. m) for footing, trench, and pit excavation that cannot be removed by rock excavating equipment equivalent to the following in size and performance ratings, without systematic drilling, ram hammering, or ripping:

1. Excavation of Footings, Trenches, and Pits: Late-model, track-mounted hydraulic excavator; equipped with a 42-inch- (1065-mm-) wide, maximum, short-tip-radius rock bucket; rated at not less than 138-hp (103-kW) flywheel power with bucket-curling force of not less than 28,700 lbf (128 kN) and stick-crowd force of not less than 18,400 lbf (82 kN) with extra-long reach boom; measured according to SAE J-1179.

2. Bulk Excavation: Late-model, track-mounted loader; rated at not less than 230-hp (172-kW) flywheel power and developing a minimum of 47,992-lbf (213.3-kN) breakout force with a general-purpose bare bucket; measured according to SAE J-732.

3. Bedrock depicted on the Project documents are approximate and based on interpolation between widely spaced explorations. Bedrock at the Site may vary up or down over short horizontal distances. Bedrock may also vary in competency over short horizontal or vertical distances.

F. Engineer, Owner's Agent, Testing Agency and Geotechnical Engineer: Owner's Representative and the review team for submittals required herein. The terms "Engineer" and "Owner's Agent" are deemed identical and are used interchangeably herein.

G. Excavation: Removal of material encountered above subgrade elevations and to lines and dimensions indicated.

1. Authorized Additional Excavation: Excavation below subgrade elevations or beyond indicated lines and dimensions as directed by Geotechnical Engineer and the Owner's Agent. Authorized additional excavation and replacement material will be paid for according to Contract provisions for changes in the Work.

2. Unauthorized Excavation: Excavation below subgrade elevations or beyond indicated lines and dimensions without direction by the Owner's Agent.

Unauthorized excavation, as well as remedial work directed by the Owner's Agent, shall be without additional compensation.

H. Fill: Soil materials used to raise existing grades.

I. Structures: Footings, foundations, retaining walls, slabs, tanks, curbs, mechanical and electrical appurtenances, or other man-made stationary features constructed above or below the ground surface.

J. Subbase Course: Aggregate layer placed between the subgrade and base course.

K. Subgrade: Uppermost surface of an excavation or the top surface of a fill or backfill immediately below subbase.

L. Unsuitable Fill (Soil): Existing fill, topsoil, clay, and other material which is unsuitable for support of proposed soil-supported structures.

M. Utilities: On-site underground pipes, conduits, ducts, manholes, vaults, structures, and cables, as well as underground services within buildings.

1.07 SUBMITTALS

A. At least 14 days prior to the start of any earthwork activities or 14 days prior to scheduled use of material, the Contractor shall submit to Engineer for review comprehensive submittals that addresses the items listed herein. Review of the submittals by the Engineer shall not relieve the Contractor of the responsibility to provide and safely complete the Work. The Contractor shall submit the following.

1. Proposed schedule, sequencing, procedure, and equipment for all earthwork, including descriptions of all methods, operations, and equipment proposed for excavation, shoring, dewatering, subgrade preparation, backfilling, compaction, proposed locations of access routes and Contractor's facilities, and soil stockpile areas within the Site and offsite.

2. Details of compaction equipment.

3. Product Data: Submit project data for each type of the following manufactured products required:

a. Geotextiles including separation fabric, filter fabric, geogrids, or similar geotextiles.

b. Earth Materials: Contractor shall be responsible for obtaining samples (50 lb. minimum) of earthwork materials proposed to be used and transporting them to the Site. Use of proposed materials by the Contractor prior to review by the Engineer shall be at the Contractor's risk. The following information shall be submitted with the samples:

1) Location of borrow source site.

2) Present and past usage of the source site and material.

3) Report(s) associated with an assessment of the source site, as relates to the presence of oil or hazardous material.

4) For each type/classification and source of off-site earth material proposed, submit a letter signed by an authorized representative of the Contractor stating that such proposed earth material is free of oils, hazardous materials, or other organic and non-organic constituents which may be considered contaminants.

5) Classification according to ASTM D 2487 and sieve analysis according to ASTM D 136. Tests shall be performed at a frequency of 1 test per 2,000 CY of material imported.

6) Laboratory compaction curve according to ASTM D 1557 – Method C. Tests shall be performed at a frequency of 1 test per 2,000 CY of material imported.

7) Moisture content of the borrow material sample.

c. Onsite Earth Materials: For on-site earth materials intended to be reused, Contractor shall provide classification according to ASTM D 2487, sieve analysis according to ASTM D 136, and Laboratory compaction curve according to ASTM D 1557 – Method C at a frequency of 1 test per 1,000 CY.

4. Pre-excavation Photographs or Videotape: Show existing conditions of adjoining construction and site improvements, including finish surfaces, which might be misconstrued as damage caused by earth moving operations. At a minimum, the pre-excavation photographs and video shall include the West Parish Filter #2 Dam, West Parish Filter #3 Dam, EDV Structure, Filter Building, Clarifying Pools, and Operations Building. The photographs shall be included in a report with descriptions, locations and sizes of deficiencies identified.

5. Flowable Fill Mix Design: Proposed mix design with admixture information.

6. Bedrock Excavation Submittal. The submittal shall detail the methods to be used to fracture and excavate bedrock, including but not limited to the use of hoe ramming, hydraulic hammering, perforation drilling, hydraulic splitting and chemical splitting. Do not blast bedrock or use explosives. The submittal shall demonstrate the following:

a. A detailed plan showing the proposed location(s) for use of each type of bedrock fracturing and excavation method.

b. Details regarding each method, such as equipment, materials, drill hole diameter and spacing, etc.

c. Qualifications for personnel and firms, demonstrating experience with the proposed methods of bedrock removal. Personnel and firms shall have a minimum of 10 years of experience with the proposed methods and shall provide a minimum of 10 similar projects where the proposed bedrock excavation methods have been used in proximity to sensitive structures. Projects shall include description of project, bedrock removal method used, proximity and type of sensitive structure, and dates of work.

B. Within 30 days from Notice to Proceed, Contractor shall prepare and submit to Engineer a project-specific Materials Removal, Stockpile, and Disposal Plan. The Plan shall outline, at a minimum, Contractor's methods for live loading, stockpiling, tracking, handling, loading, transporting, and disposing of all excess materials generated during the Work as specified herein. Contractor shall not remove any generated material from the Site, until the Materials Removal, Stockpile and Disposal Plan has been reviewed by Engineer. The Plan shall include, but not be limited to, the following:

1. Specifically address how materials from each area of the site will be managed, staged, transported and disposed off-Site.

2. Contractor's methods for tracking, handling, loading, shipping, and disposing of all excess materials.

3. Name(s), address(es) and testing requirements of all recycling and treatment/disposal facilities that Contractor proposes to use.

4. Name, title, and telephone number of contact person for each disposal facility to be used.

5. A list matching each facility with the materials it will accept for this project, and specifying whether the facility is a recycling, treatment, storage, or disposal facility.

6. Estimated quantities of excess materials expected to be transported off-Site to each facility-specific location.

7. Written confirmation from the various facilities that they will accept the type and quantities of materials, the daily maximum and minimum quantities (cubic yards or tons per day) and the dates and times (including days of the week) they will accept materials from this Work.

8. A description of Contractor's procedures to manage and track materials and an example of Contractor's material tracking log.

9. Name, title, and telephone number of contact person for each transporter to be used.

10. For each transporter to be used, copies of licenses and up-to-date permits to operate and confirmation that they are permitted to transport materials to each respective facility.

11. Details on the procedures to dewater, thicken, blend, or solidify saturated soil prior to off-Site transportation and disposal. These details shall include the proposed equipment and information on any additives to thicken or solidify saturated soil including safety data sheets (SDSs).

1.08 QUALIFICATIONS

A. The Earthwork Contractor shall submit documentation showing the following minimum qualifications:

1. Field Superintendent(s) have a minimum of 20 years of experience with similar projects. Similar projects must include Sites with limited space, similar excavation depths (up to 50 feet) and similar volumes of material requiring management. Experience shall include project name, location, description, Owner contact information.

2. Company has performed a minimum of 10 similar projects in the past 10 years. Similar projects must include similar volume of soils managed, limited space, and similar excavation depths (up to 50 feet).

1.09 QUALITY ASSURANCE

A. Earthwork Observation and Testing:

1. The Owner and/or Owner's Agent will retain a qualified Geotechnical Engineer and/or testing agency to perform onsite observation and testing during work under this and related sections and as indicated in the "Schedule of Special Inspections." The services of the Geotechnical Engineer/testing agency may include, but not be limited to, the following:

a. Observation during excavation, subgrade preparation and backfill for footings, pavements and subsurface utility construction, etc.

b. Determination of requirements for additional excavation to remove unsuitable materials.

c. Observation and testing during placement and compaction of fill and backfill.

d. Review of submittals.

2. During the course of construction, the Geotechnical Engineer/Testing Agency shall advise the Owner's Agent, in writing, with a copy to the Contractor, if at any time, in their opinion, the work is not in substantial conformity with the plans and specifications. The Geotechnical Engineer's and/or Testing Agency's presence does not include supervision or direction of the actual work by the Contractor, their employees, subcontractors or agents. Neither the presence of the Geotechnical

Engineer and/or Testing Agency, nor any observations and testing performed by them shall excuse the Contractor from defects discovered in their work.

3. Testing equipment will be provided by and testing performed by the Geotechnical Engineer and/or Testing Agency, except as otherwise provided by contract. Upon request by the Owner's Agent, the Contractor shall provide such auxiliary personnel and services as needed to accomplish testing work and to repair damage caused thereby to permanent work.

4. The Contractor shall provide access to the earthwork and allow sufficient time for the Engineer to observe and test subgrades and backfills to document whether the work is being completed in accordance with these specifications.

5. References herein to observations, testing and determinations by the "Engineer" include services to be provided by the Geotechnical Engineer and/or Testing Agency when appropriate and when so authorized by the Engineer or Owner.

B. Pre-excavation Conference: Conduct conference at Project site.

1. Before commencing earthwork, the Contractor shall meet with representatives of the Owner, Owner's Agent, engineer, consultants, independent testing agency, and other pertinent entities. Review earthwork procedures and responsibilities including testing and inspection procedures and requirements. Notify participants at least three working days prior to convening conference. Record discussions and agreements and furnish a copy to each participant.

1.10 SUBSURFACE SOIL DATA

A. GZA GeoEnvironmental, Inc. prepared a Geotechnical Engineering Report and a Summary of Environmental Soil Testing and Analytical Data for the Project. These reports are specifically not part of the Contract Documents but are available to bidders for informational purposes only.

B. The above-referenced data are for general information and are accurate only at the particular locations and times the subsurface explorations were made. It is the Contractor's responsibility to make interpretations and to draw conclusions based on the character of materials to be encountered and the impact on the Contractor's work, based on the Contractor's expert knowledge of the area and of earthwork techniques.

C. The Contractor shall review available logs, records of explorations, groundwater level data, and geotechnical and environmental testing results and other pertinent data for the site. After obtaining Owner's permission, the Contractor shall take whatever additional subsurface explorations deemed necessary at no expense to the Owner.

D. If a potential conflict exists between the above reports and these technical specifications, the Contractor shall, immediately upon its discovery, request clarification from the Geotechnical Engineer.

1.11 PROTECTION OF PERSONS AND PROPERTY

A. The work by the Contractor shall be executed in such manner as to prevent damage to adjacent buildings and property, and any other property, structures, new improvements, streets, curbs, paving, utilities, structures, monuments, benchmarks and other public or private property. Protect existing buildings and improvements from damage caused by settlement, lateral movements, undermining, washout, vibration, and other hazards created by earthwork operations.

B. In the case of any damage or injury in the performance of the work, the Contractor shall, at their own expense, make good such damage or injury to the satisfaction of the Engineer and without cost to the Owner. Existing buildings, roads, sidewalks, and curbs damaged during the project work shall be repaired or replaced to their original condition. The Contractor shall replace, at their own expense, existing benchmarks, monuments, and other reference points which are disturbed or destroyed.

C. Buried drainage structures and pipes, including those which project less than 18-inches above grade, which are subject to damage from construction equipment shall be clearly marked to indicate the hazard, by the Contractor. Markers shall indicate limits of danger areas, by means which will be clearly visible to operators of trucks and other construction equipment, and shall be maintained at all times until completion of the Project.

D. Traffic: The Contractor shall minimize interference with adjoining roads, parking lots, facilities, streets, walks, and other adjacent occupied or used facilities during earthwork operations.

1. Do not close or obstruct streets, walks, or other adjacent occupied or used facilities without permission from Owner and authorities having jurisdiction.

2. Provide alternate routes around closed or obstructed traffic ways if required by Owner or authorities having jurisdiction.

3. Do not commence earth-moving operations until temporary site fencing and erosion- and sedimentation-control measures are in place.

1.12 EXISTING UTILITIES:

A. The Contractor shall contact Massachusetts DigSafe at phone number 811 to request an underground utility location mark-out at least three (3) working days, not including the day the request is called in, but no more than thirty (30) days prior to the beginning of excavation. The Contractor shall also contact and request utility location mark-out from buried utility owners with utilities on the project site that are not participants of Massachusetts –DigSafe.

B. The Contractor shall hire private utility mark out service for areas not marked by utility companies.

C. Before starting excavation, the Contractor shall establish location and extent of any underground utilities occurring in work area. Make arrangements with appropriate utility company for removal and relocation of lines which are in the way of excavation. If utilities are to remain in place, the Contractor shall provide adequate means of support and protection during earthwork operations.

D. Should uncharted or incorrectly charted piping or other utilities be encountered during excavation, the Contractor shall consult utility owner immediately for direction. The Contractor shall ooperate with Owner, Owner's Agent, and utility companies in keeping respective services and facilities in operation. The Contractor shall repair damaged utilities to satisfaction of utility owner.

E. Inactive or abandoned utilities encountered during construction operations shall be removed, plugged or capped by the Contractor. The location of such utilities shall be noted on record drawings and reported in writing to Owner and Owner's Agent. Demolish and completely remove from site existing underground utilities indicated to be removed. Coordinate with utility companies for shutoff services if lines are active.

F. The Contractor shall not interrupt existing utilities serving facilities occupied and used by Owner or others, during occupied hours, except when permitted in writing by Owner's Agent and then only after arranging to provide acceptable temporary utility services. Provide minimum of 48 hours' notice to Owner's Agent and receive written notice to proceed before interrupting any utility. Do not proceed with utility interruptions without owner's written permission.

G. When in the course of the work it is necessary to connect a utility to a main in a public way, all the requirements of both the authorities governing the utility and those governing the public way shall be met. Pavement shall be temporarily and permanently replaced as directed by these authorities at no additional cost to the owner.

H. By submitting a Bid, the Contractor affirms that the site and all conditions affecting the work under this Section have been carefully examined. No claim for additional costs will be allowed because of lack of full knowledge of existing conditions as indicated in the Contract Documents, or obvious from observation at the Site.

1.13 DRAINAGE

A. The Contractor shall provide, at no additional cost to the Owner, adequate drainage facilities to complete all work items in an acceptable manner. Drainage shall be done in a manner so that runoff will not adversely affect construction procedures or cause excessive disturbance of underlying natural ground or abutting properties.

1.14 PERMITS, CODES AND SAFETY REQUIREMENTS:

A. The Contractor shall comply with all rules, regulations, laws and ordinances of the Municipality, State, Federal, and all other authorities having jurisdiction over the project

site. All labor, materials, equipment and services necessary to make the work comply with such requirements shall be provided by the Contractor without additional cost to the Owner.

B. The Contractor shall comply with the provisions of the Manual for Accident Prevention in Construction of the Associated General Contractors of America, Inc., and the requirements of the Occupational Safety and Health Administration, United States Department of Labor.

C. The Contractor shall procure and pay for all permits and licenses required to complete Work specified herein and shown on the Drawings.

D. The Contractor shall comply with regulations of the Commonwealth of Massachusetts, Municipality, Massachusetts Department of Environmental Protection, Environmental Protection Agency (EPA), and other agencies having jurisdiction over the work and for disposal of dewatering discharge water.

1.15 LAYOUT AND GRADES

A. The Contractor shall lay out all lines and grades not presently established at the site in accordance with the drawings and specifications. The Contractor shall establish benchmarks determined by a Land Surveyor registered in Massachusetts. The Contractor shall maintain all benchmarks and replace as directed any which are destroyed or disturbed.

B. The term “finished grade” as used herein shall mean the required final grade elevations indicated on the Drawings. Where not otherwise indicated, project site areas outside of buildings shall be given uniform slopes between such points and existing established grades.

PART 2 - PRODUCTS

2.01 SOIL MATERIALS

A. General: The Contractor shall provide borrow soil materials when sufficient satisfactory soil materials are not available from excavations. All rock and soil materials furnished for use as fill or backfill shall be free of grease, soil, solvents, pesticides, herbicides or other hazardous or deleterious materials and/or contaminants. All rock and soil materials specified in this Section shall also be free from ice, snow, trash, debris, stumps, roots and organic material. Imported soil materials containing brick, asphalt, concrete debris and other manmade materials including recycled materials shall be excluded from use at the site.

B. When the excavated onsite material meet the requirements of Structural Fill, Select Fill or Common Fill, but is replaced with off-site borrow material for the Contractor’s convenience, the costs associated with such work and material shall be borne by the Contractor.

1. Structural Fill for use as fill and backfill within structural areas, within three (3) feet laterally of below-grade building walls where geocomposite wall drains are provided, except where Select Fill is specified, shall be free from ice, snow, roots, sod, rubbish or other deleterious or organic matter. Structural Fill shall meet the requirements of the Massachusetts Department of Transportation Standard Specifications for Highways and Bridges for Gravel Borrow, Section M1.03.0-1 Type B. The structural fill maximum size of stone in gravel shall be 3-inches largest dimension and shall conform to the following gradation requirements:

SQUARE MESH SIEVES	PERCENT FINER BY WEIGHT
½ inch	50-85
No. 4	40-75
No. 50	8-28
No. 200	0-10

2. Select Fill for backfill above perimeter drains, retaining wall backfill, within three (3) feet laterally of below-grade building walls where geocomposite wall drains are not provided, and other applications requiring free draining, non-frost susceptible backfill shall be free of ice, snow, roots, sod, rubbish and other deleterious or organic matter and shall conform to the following gradation requirements.

SQUARE MESH SIEVES	PERCENT FINER BY WEIGHT
3 inch	100
½ inch	50-85
No. 4	40-75
No. 40	10-35
No. 200	0-6

3. Crushed stone shall conform to Section 31 05 16 – Aggregate Materials.

4. Geotextile fabric shall be used to separate crushed stone from all surrounding soils. The fabric shall consist of a filtration-type non-woven geotextile. See Section 31 05 19.

5. Pavement Subbase below pavements shall conform to the Massachusetts Department of Transportation Standard Specifications for Highways and Bridges, Section M2.01.7 “Dense Graded Crushed Stone for Sub-base”.

6. Common Fill: Common Fill for use in non-structural areas should consist of on-site mineral material, free of organics, deleterious materials, ice, snow, and waste of any kind. The maximum particle size should be no greater than two-thirds of the lift thickness. Water content by weight during compaction should not exceed ± 3 percent of optimum moisture as determined by ASTM D 1557.

7. Topsoil shall conform to Section 32 11 00 – Surface Restoration.

8. Flowable / Excavatable Fill/ Controlled Density Backfill: Mixture of cement, flyash, sand, water and admixtures to produce a flowable / excavatable fill with a compressive strength at 28 days between 100 and 140 psi.

9. Approved Fill for wetlands is hereby defined as clean earth, consisting of a mixture of sand, silt, and clay. Sandier textures should be avoided due to their low water-holding capacities. Fill material shall have a liquid limit less than or equal to 40 and a plasticity index less than or equal to 20, as determined by ASTM D4318. Approved Fill must be free of any roots, trees, tree stumps, leaves or other organic matter and shall also be free of any metals, masonry (i.e., construction debris), stones over one and one-half (1-1/2) inches in diameter and deleterious material. Approved Fill shall conform to the following gradation limits:

SQUARE MESH SIEVES	PERCENT FINER BY WEIGHT
Pass 3 Inch	100
Pass No. 10	50 - 100
Pass No. 60	20 - 90
Pass No. 200	0 - 20

10. Bioretention Soil Media shall conform to Section 33 46 00 Bioretention Cell.

11. Clay shall conform to the “silty clay” class of the USDA Classification System based upon results of particle size distribution analysis per ASTM D6913 and D7928. Material shall be of uniform composition, without admixture of subsoil, and free of stones greater than one-half inch (1/2”) diameter, leaves roots, debris, toxic materials, or lumps or clods over one inch (1”) diameter. The Contractor shall provide particle size distribution test results of the silty-clay as specified herein before.

12. Marginal/Aquatic Mix shall conform to the following requirements:

    a. Organic Matter: 4 % minimum

    b. pH: 6.0 to 7.0

c. Electrical Conductivity (soluble salts): 0.7 - 2.0 mmhos/cm

d. Unless otherwise indicated based on soil laboratory reports, mix shall consist of the following proportions by volume:

1) Four parts topsoil

2) One part clay

C. On-site soil materials are comprised of topsoil, existing fill, and glacial till and are not expected to be suitable for reuse for the fill materials listed above with the exception below. The Contractor shall expect that the fill materials listed above will be imported from off site.

1. Excavated existing fill and glacial till can be re-used as Structural Fill, provided it has a maximum particle size of 6 inches, or is culled of particles greater than 6 inches. Processing, culling, screening, and/or crushing of boulders, cobbles, and other oversized materials may be required to meet gradation maximum size requirements. The existing fill and glacial till shall only be reused at the discretion and approval by the Geotechnical Engineer.

2. The existing fill and glacial till must appear firm and stable during compaction and be placed and compacted when it is within 2% of optimum moisture content.

3. No additional payment or schedule shall be provided if the Contractor relies on reuse of the onsite glacial till or fill and is unable to.

4. Topsoil may be stockpiled for subsequent reuse on site at locations shown on the Contract Drawings or designated by the Owner or Engineer. Topsoil shall be kept separated from other excavated materials and shall be piled free of roots and other undesirable materials. Topsoil shall not be stored in areas where it will interfere with surface drainage or with the conservation of trees, shrubs, and other vegetation to remain. No stockpile shall be placed within 50-feet of a pond, stream, wetland, or stormwater inlet.

D. Excavated boulders shall not be reused as backfill unless they are processed (crushed) and used as crushed stone, or blended with soil and meet the gradation requirements of Select Fill or Structural Fill.

E. Onsite concrete can be crushed and blended with soil creating a well graded soil and reused onsite. The concrete-soil blend can be used below the base course of pavement and for common fill areas.

PART 3 -- EXECUTION

3.01 ELEVATED FINE-GRAINED SOIL CONTENT CONDITIONS AND MAINTAINING STABLE SUBGRADES

A. The Contractor is advised that soils at the site have variable and sometimes high fine-grained soil content (silt and clay), are poor-draining, and susceptible to loss of strength

when disturbed, which could result in an unstable subgrade for foundations and construction equipment. The subgrade may have elevated moisture contents, which in combination with disturbance from construction equipment will produce an unstable working surface unsuitable for structural support of footings, pavement, and hardscape. At a minimum, a 6-inch thick layer of Crushed Stone or a mudmat shall be placed over subgrades that will be exposed for more than 5 days, or if rain is forecasted. Measures to create and maintain stable subgrades shall be considered part of the Work and shall be provided at no additional cost to the Owner.

B. If the subgrade soils are not maintained in a stable and acceptable condition in the judgment of the Engineer or Owner, the Contractor shall stop operations and modify their procedures in a manner acceptable to the Engineer and Owner, at no additional cost to the Owner. All soils that become loose or disturbed shall be removed and replaced at no additional cost to the Owner.

3.02 EXCAVATION, GENERAL

C. Classified Excavation: The Contractor shall excavate to subgrade elevations. Material to be excavated will be classified as earth and rock. Do not disintegrate or excavate rock until it has been classified by the Geotechnical Engineer and/or Owner's Agent and the rock surface has been surveyed. The Contract Sum will be adjusted for rock excavation according to contract provisions for changes in the Work.

1. Earth excavation includes excavating pavements and obstructions visible on surface; underground structures, utilities, and other items indicated to be removed; together with soil, boulders, and other materials not classified as rock or unauthorized excavation.

    a. Intermittent drilling; hoe ramming; or ripping of material not classified as rock excavation is earth excavation.

2. Rock excavation includes removal and disposal of rock and includes replacement with approved materials when required.

    a. Uncover and expose all rock surfaces to be removed.

    b. Notify owner in writing before rock removal proceeds.

    c. The Contractor shall hire a land surveyor to cross section the top of rock and determine the quantity of rock for payment. The Owner may hire their own land surveyor to confirm top of rock. Measurements for payment will be based on in place cubic yards of rock removed to paylines, as defined on the Drawings.

    d. No payment will be made for shattered layers below pay limits, associated removal and replacement with suitable fill material.

B. Dimensions:

1. Excavate to elevations and dimensions indicated on the Contract Drawings or as otherwise required for the work. Excavate sufficient material so as to allow space for construction operations including placing and removal of forms, installation of waterproofing, damp proofing or utilities and inspection of excavated areas.

2. Side forms will be required for all concrete work unless omission of forms is requested by the Contractor, in writing, to the Owner's Agent. Where omission of forms is requested by the Contractor, and accepted by the Owner's Agent, the Contractor shall bear the cost of any additional concrete volume required beyond the minimum profiles and dimensions of the footing, wall or pier.

C. Disposition of Excavated Material:

1. Surplus excavated material not required to fulfill the requirements of the Contract shall become the property of the Contractor and shall be promptly removed from the site and legally disposed of by the Contractor unless otherwise agreed to with the Owner and Owner's Agent. Excavated material which is suitable for re-use shall not be stockpiled on-site, except in quantities which will be promptly incorporated into the work and which do not interfere with construction operations or the treatment plant operations. The cost of off-site stockpiling of materials suitable for re-use shall be borne by the Contractor.

D. Unauthorized excavation consists of removal of materials beyond the indicated subgrade elevations or dimensions without specific direction of the Owner's Agent or Geotechnical Engineer. Unauthorized excavation, as well as remedial work specified by the Owner's Agent or Geotechnical Engineer, shall be at the Contractor's expense.

1. Under footings, foundation bases, or foundation walls, fill unauthorized excavation with compacted Structural Fill or Geotextile Fabric and Crushed Stone, to bring subgrade elevations to the proper elevation position, subject to the Owner's Agent and Geotechnical Engineer's review and comment.

2. Below slabs-on-grade, unauthorized excavation shall be filled with Geotextile Fabric and Crushed Stone, or with Structural Fill, compacted to the requirements of this section.

3. Elsewhere, backfill and compact unauthorized excavations as specified for authorized excavations of same classification, unless otherwise directed by the Owner's Agent.

4. Where the excavation of otherwise suitable materials is required due to these materials being rendered unsuitable due to inadequate dewatering, disturbance, construction activity, freezing, or lack of protection from the elements, the Contractor shall excavate these materials and provide remedial work as specified above at no additional cost to the Owner.

E. Authorized Additional Excavation: In the case that unsuitable bearing, as determined by the Geotechnical Engineer, is encountered at the specified subgrade elevation, the

Owner's Agent/Engineer may direct the removal of the unsuitable material and refill with appropriate materials. Payment for such authorized additional excavation and/or refill shall be made in accordance with the applicable unit prices.

F. Sheeting, Shoring, and Bracing

1. See Section 31 50 00- SUPPORT OF EXCAVATION.

G. Dewatering

1. The Contractor shall comply with all rules, regulations, laws, and ordinances of the Commonwealth of Massachusetts, and of all other authorities having jurisdiction.

2. See Section 31 23 19- DEWATERING.

H. Explosives

1. Explosives shall not be used onsite.

J. Backfilling Prior to Acceptance of Work Installed:

1. The Contractor shall not allow or cause the work performed or installed to be covered up or enclosed by work of this Section prior to all required inspections, tests and acceptances.

2. Should any of the work be so enclosed or covered up before it has been accepted, the Contractor shall uncover all such work at no additional cost to the Owner.

3. After the work has been completed, tested, inspected and accepted, the Contractor shall make all repairs and replacements necessary to restore the work to the condition in which it was found at the time of uncovering, all at no additional cost to the Owner.

K. Frost Protection and Snow Removal:

1. The Contractor shall, at their own expense, keep the operations under this contract clear and free of accumulations of snow or as required to carry out the Work.

2. The Contractor shall not excavate to full indicated depth when freezing temperatures may be expected, unless footings can be cast immediately after excavation has been completed. The Contractor shall rotect the excavation from frost if placing of concrete is delayed. Do not cast concrete on frozen ground.

3. Completed foundations which have not been backfilled or which have less than 42 inches of earth cover above the bottom of the foundation shall be protected from freezing by temporary additional earth cover, insulating blankets, heaters or other methods.

4. The Contractor shall not place fill, backfill, concrete, or other new work on snow, frost, or frozen soil.

5. During snow removal operations, snow shall not be piled or placed beyond the limit of work and road salt will not be used where surface drainage discharges into either a wetland or buffer zone.

L. The Contractor shall intercept and collect surface runoff both at the top and bottom of slopes. The intersection of slopes with natural ground surfaces, including the beginning and ending of cut slopes, shall be uniformly rounded as shown on the Drawings or as may be indicated by the Engineer. Concurrent with excavation, Contractor shall construct intercepting ditches or earth berms along and on top of the slopes at locations shown on the Drawings or designated by the Engineer. All slopes shall be finished to reasonably uniform surfaces acceptable for seeding and mulching operations. No rock or boulders shall be left in place which protrude from the slope lines, and all rock cuts shall be cleaned of loose and overhanging material. All protruding roots and other objectionable vegetation shall be removed from slopes.

M. Slides and over-breaks which occur due to negligence, carelessness or improper construction techniques on the part of the Contractor shall be removed and disposed of by the Contractor as indicated by the Engineer at no additional cost to the Owner. If grading operations are suspended for any reason whatsoever, partially completed cut and fill slopes shall be brought to the required slope and the work of seeding and mulching or other required erosion and sedimentation control operations shall be performed.

N. Vibration Control

1. The Contractor shall limit vibrations at the site such that the maximum levels are below the limits shown on Figure 1 below, or noted otherwise. The Engineer may, at the Owner's request, provide and monitor a portable seismograph positioned adjacent to the existing buildings closest to construction, to measure vibrations levels resulting from construction. If vibrations are found to exceed the maximum limits shown on Figure 1, the Contractor shall revise their construction operations as necessary to reduce vibration levels, at no additional cost to the Owner.

FIGURE 1

NEW U. S. BUREAU OF MINES CRITERIA

FROM REPORT RI-8507 (November, 1980)

Figure 1

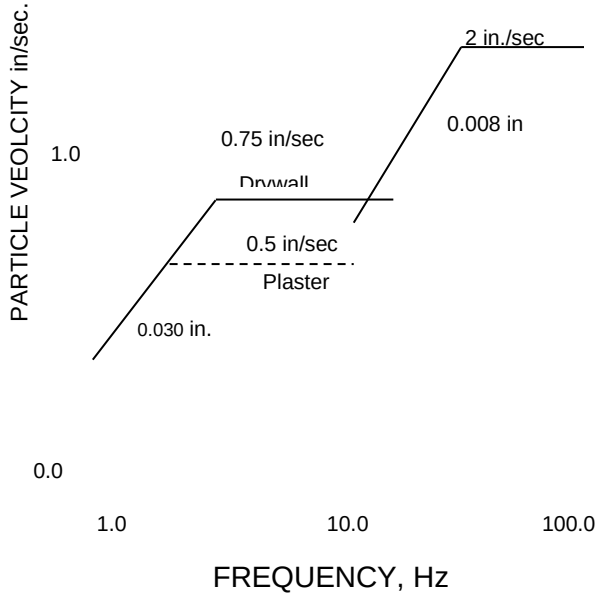

3.03 EXCAVATION FOR STRUCTURES

A. Excavate to indicated elevations and dimensions within a tolerance of plus or minus 1 inch. If applicable, extend excavations a sufficient distance from structures for placing and removing concrete formwork, for installing services and other construction, and for inspections.

3.04 SUBGRADE PREPARATION FOR SOIL-SUPPORTED FOOTINGS, MATS, SLAB-ON-GRADE, AND OTHER STRUCTURES

A. . Footings shall bear on naturally-deposited, undisturbed glacial till, naturally-deposited undisturbed Weathered Bedrock, or compacted Structural Fill, or Crushed Stone overlying geotextile fabric placed over naturally-deposited glacial till or Weathered Bedrock.

B. Beneath footings and mats, the Contractor shall over excavate the existing fill, unsuitable materials, and clay until naturally deposited undisturbed glacial till, bedrock, or weathered bedrock subgrades are encountered. The exposed subgrade will be evaluated by the Owner's Geotechnical Engineer for the potential presence of unsuitable materials. If unsuitable materials are encountered at planned bottom of structure, the unsuitable materials shall be further over excavated until suitable bearing soils are encountered. The excavations shall include the zone of influence of foundations. The zone of influence is defined by a line extending 1 foot horizontally from bottom of footing and then down at a 1 horizontal by 1 vertical line to the top of undisturbed naturally-deposited Glacial Till or weathered bedrock.

C. If foundations will be bearing directly on Glacial Till or Weathered Bedrock, the contractor shall over-excavate the subgrade 6 inches and place a Crushed Stone wrapped in geotextile fabric as a Working Mat. A Crushed Stone Working Mat is not required for Structural Fill or Select Fill subgrades, unless shown on the Contract Drawings, provided the subgrades do not become disturbed from precipitation or construction traffic. If the subgrades do become disturbed from precipitation or construction traffic, a Working Mat is required and removal and replacement of the disturbed subgrade with Structural Fill.

D. Prior to fill placement or rebar installation, the exposed naturally deposited glacial till and Weathered Bedrock subgrades shall be subjected to proof compaction in the presence of the Geotechnical Engineer. Proof compaction shall consist of a minimum of 8 passes of a vibratory roller having a minimum static drum weight of 5,000 pounds. Any weak or unstable areas identified by the Geotechnical Engineer shall be over excavated and replaced with compacted Structural Fill, Crushed Stone (wrapped in geotextile fabric) or Select Fill. Vibrations shall be discontinued if disturbance or weaving of the subgrade is observed. Proof-rolling and compaction may be waived or modified if, with the Geotechnical Engineer's concurrence, it is determined that this will disturb an otherwise suitable subgrade based on observed field conditions or it is not feasible to provide the specified equipment in the excavation area, as determined by the Geotechnical Engineer.

E. If the excavation created by removal of unsuitable bearing materials extends below the proposed subgrade elevation, the Contractor shall backfill with compacted Structural Fill.

3.05 SUBGRADE PREPARATION FOR PAVEMENT, WALKS AND EQUIPMENT PADS

A. The Contractor shall excavate surfaces under walks, pavements and equipment pads to indicated lines, cross sections, elevations, and subgrades. The Contractor shall perform the following.

1. Walks, pavements and equipment pads shall be supported on subbase/base course(s) as indicated on the drawings.

2. Existing fill and other unsuitable materials (organic soils, loose or saturated soils, pavement, utilities, slabs, foundations, etc. if encountered) shall be removed within 20 inches (vertically and horizontally) of the proposed finished elevation. Prior to any fill placement, the subgrades shall be proof compacted under the observation of the Geotechnical Engineer. Proof compaction consists of a minimum of 8 passes of a vibratory drum roller having a minimum static drum weight of at least 5,000 pounds or a vibratory plate compactor with a minimum static weight of 700 pounds for equipment pads and walks. Any weak or unstable areas identified shall be over-excavated and replaced with compacted Structural Fill. Vibrations should be discontinued if disturbance or weaving of the subgrade is observed.

3.06 SUBGRADE PREPARATION FOR UTILITIES

A. The Contractor shall excavate trenches to indicated gradients, lines, depths, and elevations.

B. The Contractor shall excavate trenches to uniform widths to provide the following clearance on each side of pipe, conduit or duct bank. Excavate trench walls vertically from trench bottom to 12 inches higher than top of pipe, conduit or duct bank unless otherwise indicated.

1. Clearance: 12 inches each side of pipe or conduit unless otherwise indicated.

C. Trench Bottoms: Excavate trenches 6 inches deeper than bottom of pipe and conduit elevation, unless otherwise indicated on Construction Documents, to allow for bedding course. Hand-excavate deeper for bells of pipe.

D. Contractor shall remove projecting stones and pointed objects along the trench subgrade.

E. Utility trench subgrades shall be proof compacted with a minimum 4 static passes of a vibratory drum roller or a plate compactor with a minimum static weight of 700 pounds, under the observation of the Geotechnical Engineer. Any weak or unstable areas identified shall be over-excavated and replaced with compacted Structural Fill.

3.07 BEDROCK REMOVAL

A. Blasting is prohibited.

B. Perforation drilling and either hydraulic splitting or chemical splitting is required for bedrock removal located within 50 feet of the existing bedrock tunnel near the EDV Chamber.

C. At locations not requiring chemical or hydraulic splitting, bedrock removal shall consist of the following, as needed, and shall adhere to the vibration levels and overpressures provided herein.

1. Mechanical ripping with an excavator

2. Hydraulic hammering, with or without perforation drilling.

3. Hydraulic splitting or expansive chemical agents.

D. Vibrations shall be limited to those recommended by the United States Bureau of Mines, RI 8507, see Article 3.02.N.

3.08 SUBGRADE INSPECTION

A. Notify Geotechnical Engineer and Owner’s Agent when excavations have reached required subgrade.

B. If Geotechnical Engineer determines that unsatisfactory soil is present, the Contractor shall continue excavation and replace with compacted backfill or fill material as directed and in accordance with this section.

C. The Contractor shall proof-roll subgrade as directed by the Geotechnical Engineer and /or Owner's Agent.

D. The Contractor shall reconstruct subgrades damaged by freezing temperatures, frost, rain, accumulated water, or construction activities, without additional compensation.

3.09 STORAGE OF SOIL MATERIALS

A. The Contractor shall stockpile soil materials without intermixing. Place, grade, and shape stockpiles to drain surface water. Cover to protect from the elements and to prevent silt runoff and windblown dust.

B. The Contractor shall stockpile soil materials away from edge of excavations. Do not store within drip line of remaining trees.

C. The Contractor shall cover stockpiles with polyethylene sheeting, or other appropriate covers, to protect the stockpiles during precipitation. The Contractor shall uncover the stockpiles during days without precipitation to allow the stockpiles to dry. No additional payment or schedule extensions shall be provided for delays due to saturated stockpiled soil.

D. No stockpiling of excavated material is allowed in a manner or location that would permit erosion and its subsequent sedimentation in wetlands or other natural areas.

E. The Contractor shall manage and handle stockpiled soil in accordance with the Materials Removal, Stockpile, and Disposal Plan.

3.10 PLACEMENT AND COMPACTION OF FILL AND BACKFILL

A. The Contractor shall place and compact backfill in excavations promptly, but not before completing the following:

1. Construction below finish grade including, where applicable, sub drainage, damp proofing, waterproofing, and perimeter insulation.

2. Where walls are to be waterproofed, all Work shall be completed and membrane materials dried or cured according to the manufacturer's instructions before backfilling.

3. Backfill against tanks and other structures which are to retain liquids shall not be performed until leakage tests are completed and accepted by the Engineer in accordance with the Section entitled "Water Tightness Testing".

4. Surveying locations of underground utilities for Record Documents.

5. Testing and inspecting underground utilities.

6. Removing concrete formwork.

7. Removing trash and debris.

8. Removing temporary shoring and bracing, and sheeting.

9. Installing permanent or temporary horizontal bracing on horizontally supported walls.

B. Place backfill on subgrades free of water, mud, frost, snow, or ice.

C. Unless otherwise specified or indicated on the drawings, the products specified in Part 2 of this Section shall be employed in the various fill and backfill applications indicated in that Part. Place and compact fill material in layers to required elevations as shown on the project drawings and as follows:

1. Under steps and ramps, use Structural Fill.

2. Under foundations and slabs, use Structural Fill.

3. Against the interior face of foundation walls, use Structural Fill backfill material. Use Select Fill material to at least 3 feet beyond the outside face of foundation walls where geocomposite wall drains are not provided. Use Structural Fill beyond the 3 feet of Select Fill backfill and within three (3) feet laterally of below-grade building walls where geocomposite wall drains are provided.

4. Under pavements, use Structural Fill, Pavement Subbase and Processed Aggregate Base.

5. Under utilities, use either Bedding Material or Crushed Stone.

D. All vegetation, topsoil or subsoil, trash, debris, roots, stumps, asphalt and any compressible or otherwise deleterious materials shall be stripped from the existing ground surface and removed from excavations prior to placement of fill or backfill unless otherwise noted.

E. All fill and backfill materials shall be placed in horizontal layers. Refer to item 3.10 O below. Each layer shall be spread evenly and thoroughly mixed during spreading to ensure uniformity of material in each layer. Layer thickness shall not exceed that specified in this Section.**Error! Bookmark not defined.**

F. Where horizontal fill layers meet a natural or excavated slope, the layer shall be keyed into the slope by cutting a bench. The surface of benches shall be compacted to the same requirements as apply to the area being filled.

G. In no instance place fill over frozen materials or over ice or snow. Removal of such materials will be required as directed by the Engineer. In no case shall frozen material be used in fill or backfill.

H. No fill shall be placed or compacted during unfavorable weather conditions. When work is interrupted by heavy rains or snow, fill operations shall not be resumed until the moisture content and density of previously placed fill are as specified hereinafter.

I. Allow the Geotechnical Engineer sufficient time to make necessary observations and tests. The degree of compaction shall be based on a maximum dry density as determined by ASTM Standard D1557, Method C. All fill and backfill placed in various areas shall be compacted in individual layers to minimum dry densities as follows:

1. Under Structures, Equipment Pads, Building Slabs, and Steps : 95 percent

2. Within 3 feet of retaining or basement walls: 92 percent

3. More than 3 feet below pavement grade: 92 percent

4. Less than 3 feet below pavement grade: 95 percent

5. Utility trenches – less than 3 feet from finish grade: 95 percent

6. Utility trenches – more than 3 feet from finish grade (other than stone): 92 percent

7. Under Walkways: 92 percent.

8. Under Lawn or Unpaved Areas: 90 percent.

9. Uniformly graded crushed stone materials which are not suited to field density testing shall be compacted to an unyielding surface and in accordance with the minimum compactive effort indicated in this Section.

J. The term "under," as applied to building, structures and paved areas, shall be construed to include all materials immediately below the plan area of the structure, as well as those materials within a line sloping at one vertical to one horizontal drawn downward and outward from the exterior of footings, structure foundations or paved areas.

K. Compaction shall be by mechanical means designed specifically for compaction and approved by the Engineer. The Engineer reserves the right to disapprove any device of inadequate capacity or of type unsuited to the character of the material being compacted. In areas which are too restricted to permit the use of mechanical compactors, fill may be placed in 3-inch layers and compacted by hand rammer or pneumatic tools.

L. Moisture Control:

1. Water shall be added to fill material which does not contain sufficient moisture to be compacted to the specified densities. Fill and backfill material containing

excess moisture shall be required to dry prior to or during compaction to a moisture content not greater than two percentage points above optimum except that material which displays pronounced elasticity or deformation underfoot or under load shall be required to dry to optimum moisture content before it is placed and compacted, if that is required to achieve specified compaction. At the Contractor's option, material which is too wet may be removed and replaced with drier material at no additional cost to the Owner.

2. The Contractor is alerted to the potential silty nature of the onsite soil which renders them sensitive to moisture. Onsite silty soils are difficult to handle and compact and are easily disturbed when wet. The Contractor shall plan and conduct the excavation and filling operations considering the nature of the onsite materials.

M. Where the Engineer determines that fill or backfill does not conform to the compacted density specified, or did not receive the minimum compactive effort specified, such fill shall be removed and replaced at the Contractor's own cost.

N. Backfilling of Walls:

1. Do not use equipment weighing more than 500 lbs. within 5 feet of all walls. Equipment weighing more than 500 lbs. shall not be used adjacent to walls, except as expressly approved by the Engineer in writing.

2. Backfill shall be placed concurrently on both sides of walls to be fully backfilled, each lift being compacted prior to placing successive lifts. Differential backfill heights (i.e., between one side of the wall and the other side) shall not exceed 2 feet.

3. Prevent damage to wall waterproofing or damp-proofing when backfilling.

O. In addition to the stated degree of compaction, all fill and backfill shall receive at least the compactive effort given in the table below. Lift thickness shall not exceed that shown for the compaction method selected. Application of the minimum compaction effort does not relieve the Contractor from the requirement to achieve the specified degree of compaction. Recommended maximum loose lift thicknesses for soil fill and the minimum number of passes of compaction equipment are summarized on the following table.

		Maximum Loose Lift Thickness		Minimum Number of Passes	
Compaction Method	Maximum Stone Size	Below Building Structures and Pavement	Less Critical Areas	Below Structures and Pavement	Less Critical Areas
Hand-operated vibratory plate or light roller in confined areas	3”	6”	8”	6	4
Hand-operated vibratory drum rollers weighing at least 1,000# in confined areas	6”	8”	10”	6	4
Light vibratory drum roller, minimum dynamic force 3,000# per foot of drum width	6”	10”	14”	8	4
Medium to heavy vibra. drum roller, min. dynamic force 5,000# per foot drum width	8”	12”	18”	8	4

P. The Contractor shall reduce or stop drum vibration if pumping or weaving of the subgrade is observed.

3.11 DISTURBANCE OF EXCAVATED AND FILLED AREAS DURING CONSTRUCTION

A. The Contractor shall take the necessary steps to avoid disturbance of subgrade during excavation and filling operations. Methods of excavation and filling shall be revised as necessary to avoid disturbance of the subgrade, including restricting the use of certain types of construction equipment and their movement over sensitive or unstable materials, dewatering and other acceptable control measures. The Contractor shall cooperate with the Engineer to modify their operations as necessary to mitigate disturbance and protect bearing soils, based on the Engineer’s observations.

B. All excavated or filled areas disturbed during construction; damaged by freezing temperatures, frost, rain, accumulated water, or construction activities; all loose or saturated soil, and other areas that do not meet compaction requirements as specified herein shall be removed and replaced with the compacted fill materials specified. Costs

of removal of disturbed material and refill with compacted fill shall be borne by the Contractor.

3.12 UTILITY TRENCH BACKFILL

A. Place backfill on subgrades free of mud, frost, snow, water, and ice.

B. Place and compact bedding course on trench bottoms and where indicated. Shape bedding course to provide continuous support for bells, joints, and barrels of pipes and for joints, fittings, and bodies of conduits and duct banks.

C. Compact initial backfill under pipe haunches and compact evenly up on both sides and along the full length of piping or conduit to avoid damage or displacement of piping or conduit. Coordinate backfilling with utilities testing.

D. Install warning tape directly above utilities, 12 inches below finished grade, except 6 inches below subgrade under pavements and slabs.

3.13 GRADING

A. General: Uniformly grade areas to a smooth surface, free of irregular surface changes. Comply with compaction requirements and grade to cross sections, lines, and elevations indicated.

1. Provide a smooth transition between adjacent existing grades and new grades.

2. Excavate soft spots, fill low spots, and trim high spots to comply with required surface tolerances.

3. Site grading shall be scheduled to avoid periods of heavy rainfall and periods of high surface water.

B. Site Rough Grading: Slope grades to direct surface water away from buildings and to prevent ponding. Finish subgrades to required elevations within the following tolerances:

1. Turf or Unpaved Areas: Plus or minus 1 inch.

2. Walks: Plus or minus 1 inch.

3. Pavements: Plus or minus 1/2 inch.

3.14 SUBBASE COURSE UNDER PAVEMENTS

A. Place subbase course on subgrades free of mud, frost, snow, or ice as follows

1. Shape subbase course to required crown elevations and cross-slope grades.

2. Place subbase course of 6 inches or less compacted thickness in a single layer.

3. Place subbase course that exceeds 6 inches in compacted thickness in layers of equal thickness, with no compacted layer more than 6 inches thick or less than 3 inches thick.

4. Compact subbase course at optimum moisture content to required grades, lines, cross sections, and thickness to not less than 95 percent of maximum dry density according to ASTM D 1557.

3.15 FIELD QUALITY CONTROL

A. Special Inspections: Owner will engage a qualified Geotechnical Engineer to perform the following special inspections:

1. Observe and document subgrade preparation prior to fill placement in structural areas.

2. Observe and document fill placement within structural areas.

3. Determine if the frequency and results of the compaction tests comply with the specification requirements.

B. Allow Geotechnical Engineer to observe and test subgrades and each fill or backfill layer. Proceed with subsequent earthwork only after test results for previously completed work comply with requirements.

C. Footing Subgrade: Footing subgrades shall be observed and documented by Geotechnical Engineer. Perform proof-compaction of subgrades in the presence of the Geotechnical Engineer.

D. Geotechnical Engineer will test compaction of soils in place according to ASTM D 1556, ASTM D 2167, ASTM D 2922, ASTM D 2937 and ASTM D 3017, as applicable.

E. Compaction tests will generally be performed at the following locations and frequencies, subject to the discretion of the Geotechnical Engineer:

1. Foundations: At each compacted fill layer, at least one test for every 500 square feet or less, but no fewer than three tests on each lift.

2. Wall Backfill: At each compacted backfill layer, at least one test for every 100 feet or less of wall length, but no fewer than two tests along a wall face.

3. Trench Backfill: At each compacted initial and final backfill layer, at least one test for every 150 feet or less of trench length, but no fewer than two tests.

4. Paved Areas and Walks: At subgrade and at each compacted fill and backfill layer, at least one test for every 2,000 sq. ft. or less of paved area or building slab, but in no case fewer than three tests.

5. Trench Backfill and Base: At each compacted backfill layer, at least one test for every 150 feet or less of trench length, but no fewer than two tests.

F. When test results indicate that subgrades, fills, or backfills have not achieved degree of compaction specified, scarify and moisten or aerate, or remove and replace soil materials to depth required; recompact and retest until specified compaction is obtained.

3.16 DISPOSAL OF SURPLUS AND WASTE MATERIALS

A. The Contractor shall remove surplus soil and waste materials, including unsatisfactory soil, trash, and debris, and legally dispose of them off Owner's property.

3.17 PROTECTION

A. Protecting Graded Areas: Protect newly graded areas from traffic, freezing, and erosion. Keep free of trash and debris.

B. Repair and reestablish grades to specified tolerances where completed or partially completed surfaces become eroded, rutted, settled, or where they lose compaction due to subsequent construction operations or weather conditions.

1. Scarify or remove and replace soil material to depth as directed by Geotechnical Engineer and/or Owner’s Agent; reshape and recompact.

C. Where settling occurs before Project correction period elapses, remove finished surfacing, backfill with additional soil material, compact, and reconstruct surfacing.

1. Restore appearance, quality, and condition of finished surfacing to match adjacent work, and eliminate evidence of restoration to greatest extent possible.

3.18 VIBRATION

A. The amount of vibration, frequency and overpressure generated by construction activities shall not exceed either regulatory statutes or directives established by State, Town or other authorities, or the peak particle velocity (PPV) and frequency relationship criteria shown on the attached Figure 1 – “New U.S. Bureau of Mines Criteria from Report RI-8501, dated November 1980”, whichever is more stringent.

B. The overpressure shall not be greater than 135 decibels at any location.

C. Peak particle velocities experienced by freshly placed concrete at the site shall be controlled to the following limits:

ELAPSED TIME OF CONCRETE CURING	MAXIMUM PEAK PARTICLE VELOCITY
Up to 2 hours	1 inch per second
2 to 24 hours	0.5 inch per second
24 to 72 hours	1 inch per second
More than 72 hours	2 inches per second

END OF SECTION

NO TEXT ON THIS PAGE

ATTACHMENT BC – 31 23 19 DEWATERING

SECTION 31 23 19

DEWATERING[1]

PART 1 – GENERAL

1.01 GENERAL PROVISIONS

A. General provisions of Contract, including GENERAL and SUPPLEMENTARY CONDITIONS, GENERAL REQUIREMENTS (if any), apply to work specified in this Section.

B. The Contractor shall coordinate Work with that of all other trades or contracts affecting or affected by Work of this Section. Cooperate with such trades to assure the steady progress of all Work under the Contract.

1.02 DESCRIPTION OF WORK

A. Work by the Contractor includes providing design, labor, materials and equipment necessary to control, manage and dispose of groundwater during construction, including but not limited to the following:

1. Designing, furnishing, installing, operating, monitoring, maintaining, and removing temporary dewatering systems as necessary to control water levels and hydrostatic pressures during construction, control bottom of excavation stability from heaving and piping, and to permit construction to occur “in the dry” and maintain stable subgrades.

2. Providing, maintaining, and removing temporary surface control devices used to direct surface water runoff away from excavations or other prepared subgrades.

3. Monitoring groundwater levels and monitoring the performance of dewatering systems.

4. Obtaining all required discharge permits, including preparing permits and permit fees.

5. Properly disposing of all discharge water in accordance with permit requirements. Comply with applicable rules, regulations, laws, permits and ordinances of all authorities having jurisdiction including, but not limited to the West Parish Water Treatment Plant and the Massachusetts Department of Environmental Protection (MASSDEP). All labor, materials, equipment and services necessary to make work comply with such requirements shall be provided without additional cost to the Owner.

B. The Contractor shall bear the cost of any replacement or rehabilitation of the subgrade or structures damaged due to dewatering, system failures, or Contractor negligence.

C. The Contractor is responsible for determining the need and extent of required dewatering systems, sedimentation and dewatering techniques and controls that meet the

[1] Addendum No. 5

requirements of the Project Permits and this Section. The anticipated locations where construction activities will require dewatering are provided below, but not limited to. The dewatering depths and locations are approximate and it is the Contractor's responsibility to review Project documents for depths and limits based on means and methods. The Drawings supersede references to dewatering locations and limits below.

1. Wash Water Tank: Groundwater was measured at about El. 443 feet and bottom of proposed tank foundation is El. 419.3 feet.
2. Water Treatment Building: Groundwater in the vicinity was measured at about El. 455 feet and bottom of proposed foundation is as low as El. 450 feet.
3. Raw Water Main: The new Raw Water Main parallels Granville Road on the south side of the Plant, bends north between the Clearwell Building and existing Slow Sand Filter No. 12&14, crosses Cook Brook, and heads north to the existing EDV Structure. The Raw Water Main is anticipated to be below groundwater near the Water Treatment Building, in proximity to Cook Brook, and where the pipe extends from Cook Brook to the EDV Structure.
4. The Raw Water Main extends below Cook Brook. The Design team has anticipated the Contractor will divert the brook, in coordination with the temporary support of excavation, to complete the installation below Cook Brook.

D. If wells or well points are to be used, they shall be designed by a Massachusetts registered Professional Engineer, installed with proper filter packs and developed by an experienced dewatering specialty contractor. Do not operate wells or well points such that fines are removed from the surrounding soils.

E. Dewatering sumps shall operate through properly installed filter media so that fines are not pumped from areas surrounding the excavation. Discharge effluent shall be clear of sediment. Provide frac tanks, filter sacks, and whatever additional means are necessary to maintain sediment-free discharge.

1.03 RELATED WORK

A. The following items are not included in this Section and will be performed under the designated Sections:

1. Section 31 20 00: EARTHWORK
2. Section 31 50 00: SUPPORT OF EXCAVATION
3. Section 31 25 00: EROSION AND SEDIMENTATION CONTROLS
4. Section 31 52 01: DEWATERING AND FLOW DIVERSION FOR STREAMWORK

1.04 REGULATORY REQUIREMENTS

A. Comply with all rules, regulations, laws, and ordinances of the Commonwealth of Massachusetts, City of Westfield, and of all other authorities having jurisdiction.

1.05 PERFORMANCE REQUIREMENTS

A. Dewatering Performance: The Contractor shall design, furnish, install, test, operate, monitor, and maintain dewatering system of sufficient scope, size, and capacity to control hydrostatic pressures and to lower, control, remove, and dispose of groundwater and permit excavation and construction to proceed on dry, stable subgrades.

1. Delegated Design: The Contractor shall design dewatering systems, including comprehensive engineering analysis by a qualified professional engineer, using accepted engineering practice and design criteria indicated herein. Design and shop drawings shall be stamped by a registered Professional Engineer licensed in the Commonwealth of Massachusetts.

2. West Parish Filter #2 Dam and West Parish Filter #3 Dam are located on the edges of the Work. Two vibrating wire piezometers will be installed by the Owner's Design Team adjacent/in each dam, with the intent of evaluating drawdown due to construction dewatering. The water levels within the two piezometers at each dam shall not fluctuate by more than 2 feet from one another during dewatering operations. If the water levels fluctuate more than 2 feet, the Contractor's dewatering design shall include provisions to rewater and or the dewatering shall be terminated, modified, and restarted.

3. Groundwater shall be lowered to a minimum of 2 feet below bottom of excavations and deeper as necessary to perform the work in the "dry" and to maintain a firm and stable subgrade.

4. See Article 1.9 for deflection criteria of adjacent structures.

5. The Contractor shall continuously monitor and maintain dewatering operations to ensure erosion control, stability of excavations and constructed slopes, that excavation does not flood, and that damage to subgrades and permanent structures is prevented.

6. For wellpoints (or similar), the Contractor's dewatering system shall include redundant components such that if one pump or well becomes inoperable, a backup is available to maintain dewatered groundwater levels. The system shall include 100% standby power onsite throughout operation.

7. For wellpoints (or similar), the design shall include provisions to maintain the dewatering system without affecting the normal operation of the system.

8. Provide sufficient fuel to maintain a five-day supply onsite.

9. For dewatering greater than 5 feet of drawdown below static groundwater levels, the Contractor shall have onsite pipes and pumps of sufficient size and quantity to be able to flood the excavation within 12 hours in an emergency situation. Restoration of the working area shall be carried out by the Contractor at no additional cost to the Owner.

10. The Contractor shall prevent surface water from entering excavations by grading, dikes, or other means. Accomplish dewatering without damaging existing buildings, structures, and site improvements adjacent to excavation.

11. The Contractor shall remove the dewatering system when no longer required for construction. If allowed in writing by the Owner, the dewatering system may also be properly abandoned (e.g., grouting well points). There is no guarantee the Owner will allow abandonment, depending on location and depth of

system.

B. The Contractor shall be solely responsible for any damage to adjacent buildings, dams, structures, utilities, and other facilities caused by the dewatering operations. Any damage caused by the dewatering operations shall be repaired at no additional cost to the Owner. Locate dewatering facilities where they will not interfere with existing utilities, facilities and/or construction Work to be done under this Contract.

C. The Contractor shall provide adequate backup power to be able to operate the dewatering system through the duration of the work so that disturbance of utility or structure subgrade does not occur.

1.06 QUALIFICATIONS

A. The dewatering Contractor shall submit documentation showing the following minimum qualifications:

1. Field personnel supervising the dewatering system installation, operation and maintenance has a minimum of 20 years of experience with similar types of groundwater control systems. Experience shall include project name, location, type of groundwater control system, type of soils, and depth of dewatering.

2. Company has performed a minimum of 10 similar projects in the past 10 years. Similar projects must be in similar soils, used similar groundwater control systems, and have the same or deeper depth of dewatering.

3. If the Contractor does not have personnel with the required groundwater control experience, they shall retain an experienced specialist to design and oversee the operation of the groundwater control facilities.

B. The dewatering Engineer shall submit documentation showing the following minimum qualifications:

1. Professional Engineer stamping the dewatering system design has a minimum of 20 years of experience with similar types of groundwater control systems. Experience shall include a minimum of 10 similar projects designed within the past 10 years, including project name, location, type of groundwater control system, type of soils, and depth of dewatering. Engineer shall be licensed in the Commonwealth of Massachusetts.

1.07 SUBMITTALS

A. A mandatory Site meeting, or with the Owner's approval a conference call, with the Contractor, dewatering designer, ESS Engineer, Geotechnical Engineer, Earthwork Contractor, and Dewatering Engineer is required prior to submission of calculations or working drawings that include support of excavation systems and a dewatering drawdown of 5 feet or greater. The intent of the meeting is to coordinate the design components.

B. At least 14 days prior to the start of dewatering activities, the Contractor shall submit to Engineer for review a comprehensive submittal that addresses the items listed herein. Review of the submittal by the Engineer shall not relieve the Contractor of the responsibility to provide and safely complete the Work.

1. Dewatering system design and calculations stamped and signed by a licensed

Professional Engineer, registered in the Commonwealth of Massachusetts, that includes:

a. Estimated drawdown and flow for the excavations.
b. Estimated groundwater drawdown and lowering below surrounding structures, including the existing dams, utilities and buildings, and estimated settlements.
c. Boundary conditions including Upper Lagoon and Cook Brook.
d. Minimum number, depth, and diameter of wells and pumps.
e. Well filter design.
f. Estimated soil properties.
g. Finite element seepage analysis estimating exit gradients, flow velocities, and flow rates for any dewatering drawdown greater than 10 feet.

2. Dewatering system plans shall include:

a. Plan and Section drawings showing the arrangement, location and depths of the proposed dewatering system components, including observation wells, wellpoints, headers, sumps, ditches, and discharge lines, as necessary.
b. Locations and sizes of discharge pits and sedimentation removal details.
c. A complete description of the equipment and materials to be used and the procedures to be followed in installation, operation, maintenance and abandonment procedures in relation to the proposed sequence of excavation and method of earth support.

3. The Contractor's Dewatering Plan shall include daily observation requirements, operation requirements, water quality testing and frequency for discharged water, and control procedures to be adopted if dewatering problems arise

4. Submit copies of all groundwater discharge permits or written approval obtained by the Contractor for proposed methods of discharge.

6. Daily discharge rates and observation well readings (if wells are installed per design).

6. Coordinate dewatering submittals with the excavation support submittals. Do not proceed with the installation of excavation support until submittals for dewatering and excavation support have been reviewed by the Engineer.

B. At the completion of dewatering, submit the following:

1. Dewatering well removal records including date, well number, location, procedures and materials used.

1.08 PROJECT CONDITIONS

A. The Contractor shall visit the site to review all details of the work and working conditions and to verify dimensions in the field. Notify the Engineer in writing of any discrepancy before performing any work.

B. Consult official records of existing utilities and structures, both surface and subsurface,

and their connection to be fully informed on all existing conditions and limitations as they apply to this work and its relation to other construction work.

C. West Parish Filter #2 Dam and West Parish Filter #3 Dam are located on the edges of the Work and must be protected, including changes to seepage, settlement and / or slope stability. Inspection/Evaluation Reports of the two dams are listed under Section 01 11 00 and can be provided upon request.

D. The Contractor shall protect existing utilities to remain within the work area.

E. Notify the Engineer in writing if unexpected subsurface conditions are encountered.

F. Project-Site Information: Geotechnical and environmental reports have been prepared for this Project and are available in the supplemental information that is made available for information only. The opinions expressed in the reports are those of the geotechnical engineer and environmental professional and represent interpretations of subsurface conditions, tests, and results of analyses conducted by geotechnical engineer and environmental professional. The Owner will not be responsible for interpretations or conclusions drawn from this data.

1. After obtaining Owner's permission, the Contractor shall perform additional subsurface explorations deemed necessary at no expense to the Owner.

G. As part of the dewatering design, obtain the data required to analyze the water and soil environment at the Site in order to assure that the material used for the dewatering systems will not erode, deteriorate, clog or otherwise hinder the system's performance during the period of the dewatering.

H. Water level readings have been made in the explorations at times and under conditions stated on the logs. Fluctuations in the level of the groundwater may occur due to variations in rainfall, temperature, and other factors occurring since the time measurements were made.

I. The Contractor shall provide all conveyances (piping, hosing, or open channels) to convey dewatering effluent to discharge point. The use of existing drains, pipes, or open channels will not be permitted to be the Contractor's use for discharging dewatering effluent.

1.09 DEFLECTION MONITORING

A. The Owner's Engineer shall install a survey monitoring system, consisting of an automated total station, that will survey existing buildings, dams, structures and site improvements located in proximity of the Work. The survey data will be provided to the Contractor, if requested, throughout the course of the project.

B. The Contractor's dewatering design shall limit settlement and deflection of buildings, dams, structures and utilities within the limit of drawdown to ½ inch or less. If settlements or deflections of ½ inch or more are measured, the Contractor shall provide modification or other means of dewatering to limit any additional movement. The Owner's survey monitoring system will be basis of deflection monitoring. The Contractor may install a separate monitoring system at no additional cost to the Owner.

PART 2 – PRODUCTS

NOT APPLICABLE

PART 3 – EXECUTION

3.01 PREPARATION

A. The Contractor shall protect structures, utilities, sidewalks, pavements, and other facilities from damage caused by settlement, lateral movement, undermining, washout, and other hazards created by dewatering operations.

1. Prevent surface water and subsurface or groundwater from entering excavations, from ponding on prepared subgrades, and from flooding site and surrounding area.

2. Protect subgrades and foundation soils from softening and damage by rain or water accumulation.

B. The Contractor shall install dewatering system to ensure minimum interference with roads, streets, walks, and other adjacent occupied and used facilities.

1. Do not close or obstruct streets, walks, or other adjacent occupied or used facilities without permission from Owner and authorities having jurisdiction. Provide alternate routes around closed or obstructed traffic ways if required by authorities having jurisdiction.

C. The Contractor shall provide temporary grading to facilitate dewatering and control of surface water.

D. The Contractor shall monitor dewatering systems continuously.

E. The Contractor shall promptly repair damages to adjacent facilities caused by dewatering.

F. The dewatering system design must be coordinated with the excavation support design.

3.02 INSTALLATION

A. The Contractor shall install dewatering system utilizing wells, well points, or similar methods complete with pump equipment, standby power and pumps, filter material, valves, appurtenances, water disposal, and surface-water controls.

1. Space well points or wells at intervals required to provide dewatering to the levels described herein.

2. Use filters or other means to prevent pumping of fine sands or silts from the subsurface.

B. Before excavating below groundwater level, place system into operation to lower

water to specified levels (i.e., dewater ahead of the excavation). Operate system continuously until utilities, and structures have been constructed and fill / backfill materials have been placed or until dewatering is no longer required.

C. The Contractor shall provide an adequate system to lower and control groundwater to permit excavation, construction of utilities and structures, and placement of fill materials on dry subgrades. Install sufficient dewatering equipment to drain water-bearing strata above and below bottom of excavations.

1. Open-sump pumping that leads to loss of fines, soil piping, subgrade softening, and slope instability shall not be permitted. If damage to existing or new construction occurs due to loss of fines, soil piping, subgrade softening or slope instability, the Contractor will supply all materials, labor, and perform all repair Work to satisfaction of the Owner at no additional cost to the Owner.

D. Provide standby equipment on site, installed and available for immediate operation, to maintain dewatering on continuous basis if any part of system becomes inadequate or fails. If dewatering requirements are not satisfactory due to inadequacy or failure of dewatering system, restore damaged structures and foundation soils at no additional expense to Owner.

1. Remove dewatering system from Project site on completion of dewatering. Abandon wells in accordance with all laws, regulations, and permits.

3.03 DISPOSAL OF WATER

A. The Contractor shall take all necessary precautions to prevent flow or seepage back into the excavation. The Contractor shall preclude the accidental discharge of fuel, oil, etc., in order to prevent adverse effects on groundwater quality.

B. The Contractor shall dispose of water removed by dewatering in a manner that avoids endangering public health, property, and portions of work under construction or completed. Dispose of water and sediment in a manner that avoids inconvenience to others. Provide sumps, sedimentation tanks, and other flow-control devices as required by authorities having jurisdiction.

C. All handling and disposal of groundwater shall be in accordance with the reviewed contractor submittals and permit stipulations obtained by the Contractor.

D. If frac tanks and or filter sacks are required, the Contractor shall provide all necessary piping for discharge to the sediment removal system and specified discharge point at no additional cost to the Owner. The Contractor shall operate pumps and frac tanks in such a manner as to comply with the requirements of discharge permits. If necessary, the Contractor shall provide additional tanks and/or other mitigating measures at no additional cost to the Owner.

E. Dewatering discharge shall be conducted in a manner that will not result in interference with other work or damage to adjacent properties, pavements and other surfaces, buildings, structures, utilities, and the environment.

3.04 FIELD QUALITY CONTROL

A. The Contractor shall provide continual observation to ensure that subsurface soils are not being removed by the dewatering operation.

END OF SECTION

NO TEXT ON THIS PAGE

ATTACHMENT BD – 31 50 00 SUPPORT OF EXCAVATION

SECTION 31 50 00
SUPPORT OF EXCAVATION[1]

PART 1 – GENERAL

1.01 GENERAL

A. General provisions of Contract, including GENERAL and SUPPLEMENTARY CONDITIONS, GENERAL REQUIREMENTS (if any), apply to work specified in this Section.

B. The Contractor shall coordinate Work with that of all other trades or contracts affecting or affected by Work of this Section. Cooperate with such trades to assure the steady progress of all Work under the Contract.

C. The Contractor shall be responsible for the design and construction of the temporary excavation support system, in accordance with the minimum design requirements specified herein and shown on the Contract Drawings.

1.02 DESCRIPTION OF WORK

A. Temporary earth support systems shall be designed by the Contractor's engineer using normally accepted engineering parameters and design practices. The type of system shall be selected by the Contractor based on Site limitations, this Specification, and the recommendation of the design Engineer. It is the Contractor's responsibility to locate the earth support system such that it does not interfere or damage existing utilities, structures, or new construction.[2]

B. Sheet pile walls are prohibited. Any deep foundation element of a temporary support of excavation must be drilled and not driven.

C. The temporary earth support contractor shall coordinate with all other contractors onsite and the Owner, so as not to prohibit the functions of the facility, equipment, or other contractors. The Site has limited available area for storage, laydown, or maneuvering. No additional payment shall be made due to insufficient laydown, storage or maneuvering area. All Contractor's will have the opportunity to inspect the Site during bidding to view Site limitations. A non-mandatory pre-bid conference will be held.

D. Support of excavation is anticipated to be required at the following areas, but not limited to. THE EXCAVATION DEPTHS ARE APPROXIMATE AND IT IS THE CONTRACTOR's responsibility to review the project documents for excavation depths and limits based on means and methods. The Drawings supersede references to excavation locations and limits below.

---

1 Addendum No. 5
2 Addendum No.4

1. During demolition of the existing Slow Sand Filters to protect existing utilities and infrastructure. The existing Slow Sand Filter walls could be used as temporary earth support, provided they are adequately braced and that supporting calculations are provided to, and reviewed by the Owner and the Owner's Engineer. Available drawings of the existing Slow Sand Filters are listed under Section 01 11 00 and can be provided upon request.[2]

2. Raw Water Main installation. Excavations are up to about 23-feet deep.

    a. The Raw Water Main will be installed adjacent to Existing Slow Sand Filters No. 12 and 14. The filter walls are unreinforced concrete from the 1920s and must be protected during excavation support installation and removal. Influence of the Slow Sand Filter foundations, if any, must be included in system design.
    b. The Raw Water Main will cross below Cook Brook, requiring temporary dewatering (or diversion) and temporary excavation support. The Contractor is responsible for coordination of the temporary dewatering and excavation support such that flooding of the excavation does not occur. Repairs required due to flooding of the excavation shall be borne by the Contractor at no additional cost to the Owner.[2]
    c. The Raw Water Main crosses an existing bedrock tunnel adjacent to the EDV Structure. Available drawings of the bedrock tunnel are listed under Section 01 11 00 and can be provided upon request. The Contractor is responsible for protection of the existing bedrock tunnel during construction. At the Contractor's discretion, and with the Owner's written permission, the Contractor may perform additional test pits and or test probes, at no additional cost to the Owner. Repairs to the bedrock tunnel caused by construction shall be repaired by the Contractor at no additional cost to the Owner.[2]

3. The temporary Treated Water Transmission Mains are approximately 30 feet below existing grade and within approximately 40 feet from of the Upper Lagoon.

4. Treated Water Transmission Main installations. Excavations are up to approximately 40 feet below existing grade.

    a. The Treated Water Transmission Main connecting to the existing transmission main at the north end of the site is approximately 35 feet away from Cook Brook and approximately 10 feet from the waste washwater tanks.

    b. The Treated Water Transmission Main connecting to the existing transmission main at the east end of the site is approximately 200 feet away from the Upper Lagoon.

5. Wash Water Tank: Bottom of proposed footing is approximately 50 feet below existing grade.

6. Water Treatment Building: Bottom of proposed footing is approximately El. 450 feet, approximately 20 feet below existing grade.

7. Tying new utilities into existing utilities to the east of the existing Rapid Sand Filter Building to limit excavations and protect existing utilities.
8. New utilities deeper than about 6 feet, as needed to limit excavation limits and allow continued use of the facility and equipment.
9. Other areas based on the Contractor's sequencing, means and methods, or other requirements.

E. The work covered under this Section includes the Contractor to furnish all materials, labor, tools, equipment, and other incidental items for the safe and complete installation of earth support systems to be used.

F. Excavation support shall be sequenced so there is always access to the existing buildings and equipment, unless approved in writing by the owner.

G. Earth support systems shall be designed and installed in coordination with any required dewatering to all the Work to be performed in the dry.

H. The Contractor's work shall include the cost of any replacement or rehabilitation of the subgrade or structures damaged due to excavation support system failures or Contractor negligence.

1.03 RELATED WORK

A. Section 31 00 01 – EARTHWORK

B. Section 31 23 19 – DEWATERING

1.04 DEFINITIONS AND REFERENCE STANDARDS

A. Earth Support Systems (ESS): Earth support systems specified herein are systems required for temporary lateral earth support to protect the adjacent structures, roadways, and utilities. Elements for ESS could include soldier piles and lagging, soil nail wall, trench boxes, slide rail system, secant pile walls, tiebacks, wales, struts, rakers, or other options.

B. Geotechnical Engineer: Consultant hired by the Owner for review of submittals required herein, and observation/documentation of installation, as applicable.

C. ASTM: Specifications of the American Society for Testing and Materials.

D. AWS: Standard Code for Welding in Building Construction, of the American Welding Society.

E. AISC: Specification of the American Institute of Steel Construction.

F. ACI: American Concrete Institute

G. API: American Petroleum Institute

H. PTI: Post-Tensioning Institute

1.05 QUALITY ASSURANCE

A. The Contractor shall adhere to the applicable requirements of the Standard Specifications, OSHA Standards, and to all other applicable ordinances, codes, statutory rules and regulations of the Federal, State, and local authorities having jurisdiction.

B. Observation and Testing: The Owner will retain a Geotechnical Engineer to perform on-site observation and to witness testing and installation of select ESS. The Geotechnical Engineer shall be provided sufficient notification and adequate opportunity to observe and document the work. The Contractor shall cooperate with the Geotechnical Engineer to provide access to the work for observation, measurements, and testing. Review by the Owner or Geotechnical Engineer shall not relieve the Contractor from their responsibility for performing the Work in accordance with the Contractor Documents. The services of the Owner's Geotechnical Engineer may include, but not be limited to the following:

1. Observation and documentation during installation of ESS.

2. Review of submittals/shop drawings for the ESS.

3. The Geotechnical Engineer's presence does not include supervision or direction of the actual work by the Contractor, their employees or agents. Neither the presence of the Geotechnical Engineer, nor any observations and testing performed by them, shall excuse the Contractor from defects discovered in their work. The Geotechnical Engineer shall not be liable for any defects or failures in the Contractor's work.[2]

C. The Contractor shall retain an independent testing agency to sample and test the temporary earth support system materials (e.g., concrete, shotcrete, mortar, grout, etc.). The testing agency's field representative taking the samples shall have at least three years of applicable experience. The Contractor shall provide access and such auxiliary personnel and services as needed to assist the testing agency to complete the work.

D. All pressure gages, torque wrenches, and jacks employed in the testing and tensioning of ESS components (load tests, tie-back anchors, tie-rods, soil nails, etc.) shall be calibrated by an approved testing laboratory at the Contractor's expense. The Contractor shall submit a certificate of calibration which is dated within three months prior to use on this project.

1.06 QUALIFICATIONS

A. The ESS Contractor shall submit documentation showing the following minimum qualifications, subject to Owner approval:

1. Field personnel supervising the ESS system installation, operation and maintenance has a minimum of 20 years of experience with similar types of ESS systems. Experience shall include project name, location, type of ESS system, type of soils, and depth of excavation.

2. Company has performed a minimum of 10 similar projects in the past 10 years. Similar projects must be in similar soils, used similar ESS systems, and have the same or deeper excavations.

3. If the Contractor does not have personnel with the required ESS experience, they shall retain an experienced specialist to design and oversee the operation.

B. The ESS Engineer shall submit documentation showing the following minimum qualifications, subject to Owner approval:

1. Professional Engineer stamping the ESS design has a minimum of 20 years of experience with similar types of ESS systems. Experience shall include a minimum of 10 similar projects designed within the past 10 years, including project name, location, type of ESS, type of soils, and excavation depth. Engineer shall be licensed in the Commonwealth of Massachusetts.

1.07 DESIGN CRITERIA

A. These criteria are intended to serve as a guide to the Contractor and their Engineer in the design of the ESS for temporary lateral loading conditions and shall be regarded as the minimum acceptable. The Contractor shall be responsible for detailed designs which account for the varying field and subsurface conditions, using industry accepted design references.[2]

B. The primary function of the ESS is to serve as a vertical and lateral support system to retain the overhead and/or adjacent soil, water, structures, utilities, streets, and other facilities and to protect them from damage due to settlement, lateral movements, loss-of-ground, vibration, or any other causes related to this construction.

C. The minimum required depth for the ESS shall be determined by the Contractor's Engineer based on data made available and shall be subject to review by the Geotechnical Engineer.[2]

D. The ESS shall be designed for the following minimum design criteria:

1. Lateral pressures and design methods shall conform to accepted engineering practice, be performed in accordance with the Massachusetts State Building Code, and be performed, stamped and signed by a registered Professional Engineer registered in the Commonwealth of Massachusetts.

2. Hydrostatic pressures as appropriate.

3. Construction lateral surcharge loading of 250 psf minimum to account for surcharge associated with construction equipment. The Contractor and its design engineer shall verify that these pressures are appropriate for the selected construction equipment. Additional construction surcharge shall be considered and applied as appropriate.

4. Minimum applied surcharges from equipment and other structures shall be calculated in accordance with the Naval Facilities Design Manual 7.02, dated 1986.[2]

5. Provide a minimum factor of safety of 1.5 on passive pressure to calculate toe stability.

6. The bottom of excavation used in the support of excavation design shall include 2 feet of over excavation below the footing elevation.

7. The Contractor's design shall include development of detailed mitigating procedures and methods to be undertaken in the event that movements of the ESS result in movement of the ground, overhead structures, or adjacent structures.

8. Drilled piles and tiebacks shall be installed using temporary casing to avoid possible loss of ground.

9. If the ESS will be within the zone of influence of existing building foundations, the foundation loading shall be included as part of the ESS design.

1.08 PERFORMANCE CRITERIA

A. The Contractor shall be responsible for damage to any structure due to their work, and for corrective action or repairs needed to restore the structure to its original condition at no cost to the Owner and no schedule impact to the Project.

B. The Contractor's ESS system shall satisfactorily control movements of the adjacent existing buildings, roadways, utilities, and other structures, to prevent damage. The vertical and lateral movement shall be less than 0.75 inches, or 0.3% of the wall height, whichever is greater, at any location or depth along the ESS.

C. The criteria presented in 1.08.B are intended only to establish a guideline, and in no way relieves the Contractor of their responsibility for preventing detrimental movements or damage causing structural distress of any structure or utility. The Contractor shall provide all measures necessary to control movements to within the established performance criteria, or to lesser amounts, as required to prevent damage.[2]

D. The work shall be executed in such a manner as to prevent damage to existing structures and to any other public and private property and existing improvements. The Contractor shall protect existing improvements from damage caused by settlement, lateral movement, loss of ground, undermining, washout, and other potential hazards which may be initiated by ESS operations. Damage to existing facilities shall be repaired by the Contractor at their own expense.

E. Excavation support systems shall be designed and installed in a manner that limits the peak particle velocity measured at the ground surface throughout the installation period to the USBM- RI 8507 recommended guidelines (included at end of Section). The peak particle velocity limits are to be measured at a distance of 25 feet from the face of the

nearest existing structure adjacent to excavation area, or 50 feet from the nearest structure, whichever is less.

F. The Owner's Engineer shall install a survey monitoring system, consisting of an automated total station, that will survey the top of ESS, existing buildings, dams, structures and site improvements located in proximity of the Work. The survey data will be provided to the Contractor, if requested, throughout the course of the project. The Owner's survey monitoring system will be basis of deflection monitoring. The Contractor may install a separate monitoring system at no additional cost to the Owner.

1.09 SUBMITTALS

A. The Contractor's submittals shall be subject to the review of the Geotechnical Engineer and shall not proceed with construction until review has been completed. The Contractor shall revise or modify the proposed ESS scheme in accordance with review comments provided by the Geotechnical Engineer.

B. Review of the excavation support system by the Geotechnical Engineer will not relieve the Contractor from the responsibility for the adequacy of the design and construction of excavation support system to achieve the required results.

C. Qualification Package

1. Submit the names and qualifications of the ESS subcontractor, Engineer and Testing Firm, including resumes to demonstrate the qualifications of the engineer, field superintendent and the field representative for the Testing Agent required in Article 1.05.C and 1.06.

2. Welder Qualifications and Welding Procedures in accordance with AWS D1.5.

D. Design Drawings and Calculations

1. A mandatory Site meeting, or with the Owner's approval a conference call, with the Contractor, ESS Engineer, Geotechnical Engineer, Earthwork Contractor, and Dewatering Engineer is required prior to submission of calculations or working drawings that include support of excavation systems and a dewatering drawdown of 5 feet or greater. The intent of the meeting is to coordinate the design components.

2. The Contractor shall submit working drawings and calculations, prepared and stamped by a Professional Engineer licensed in the Commonwealth of Massachusetts, at least two (2) weeks before beginning excavation for excavation support systems. At a minimum, the working drawings and calculations shall include the following:

a. Grades and strengths of all construction materials used.

b. Design excavation depth.

c. Minimum depths for the excavation support system.

d. Materials, details, arrangement, and method of construction of the proposed excavation support system and sequence of construction (including bottom elevation of excavation at each stage).

e. Loads on the excavation support system, including anticipated equipment, and other surcharge loads on adjacent ground during construction.

f. Plan view showing ESS limits and existing utility facilities.

g. Section views showing the proposed ESS components, excavation depths and assumed soil conditions.

h. Method of supporting existing utilities through excavation.

i. Views showing excavation support system, including details around any openings in the support system walls, such as those required to accommodate utility penetrations.

j. Mechanism and procedures for transferring load into piles, tiebacks, struts, or other members.

k. Concrete/ Grout mix design proposed for the ESS systems.

l. Details of plan to contain and dispose of drill spoils during the drilling operations.

m. Theoretical deflection of the system.

2. Trench Boxes and Slide Rail Systems

a. For trench boxes and slide rail systems, submit drawings indicating the proposed location, installation and removal sequencing, and model of trench box or slide rail systems.

b. Calculations and or product sheets showing the proposed system can retain the required excavation depths and pressures, including any required surcharge loads.

3. Slow Sand Filter Wall Reuse

a. Calculations showing the existing structure, including modifications/additions/bracing, can retain the required excavation depths and pressures, including any required surcharge loads.

1.10 JOB CONDITIONS

A. The Contractor shall visit the site to review working conditions and to verify dimensions in the field during the bidding phase. Notify the Engineer in writing of any discrepancy before performing any work.

B. Interruption of Existing Utilities: Do not interrupt any utility serving facilities occupied by Owner or others unless permitted under the following conditions and then only after arranging to provide temporary utility according to requirements required by utility Owner:

1. Notify Owner no fewer than fourteen consecutive calendar days in advance of proposed interruption of utility.

2. Do not proceed with interruption of utility without Owner's written permission.

C. The Contractor is hereby made aware that the proposed construction is located within an active water treatment plant setting. Installation of the excavation support system shall not compromise the use of the property or any existing structures.

D. The Contractor shall protect existing utilities to remain within the work area in accordance with the requirements of authorities having jurisdiction over the same.

E. The Contractor shall immediately stop installation of the earth support system upon direction of the Owner.

F. Contractor shall have materials and equipment available to backfill the ESS in the event excess movement or failure is measured.

G. Proceed with caution in areas of utility facilities. The Contractor is responsible for any damage to utilities caused by the Contractor's operations. Damaged utilities shall be restored by the Contractor to equal or better operation at no additional cost to the Owner.

H. If existing utility facilities interfere with the proposed method of support, modify or relocate such facilities as required in a manner accepted by the Owner and the utility owner.

I. West Parish Filter #2 Dam and West Parish Filter #3 Dam are located on the edges of the Work and must be protected, including changes to seepage, settlement and or slope stability. Inspection/Evaluation Reports of the two dams are listed under Section 01 11 00 and can be provided upon request.

1.11 SUBSURFACE SOIL DATA

A. The Contractor shall review logs of borings, records of explorations, and other pertinent data for the site. After obtaining Owner's permission, take whatever additional subsurface explorations as deemed necessary at no expense to the Owner.

B. Subsurface exploration logs and locations are shown in the Geotechnical Engineering Report prepared by GZA GeoEnvironmental, Inc.

C. Aforementioned data is for general information and is accurate only at the particular locations and times the subsurface explorations were made. It is the Contractor's responsibility to make interpretations and draw conclusions based on the character of materials to be encountered and the impact on the work specified herein, based on the Contractor’s expert knowledge of the area and of support of excavation techniques.

D. The Contractor affirms that the site and all conditions affecting the Work under this Section have been carefully examined. No claim for additional costs will be allowed because of lack of full knowledge of existing conditions as indicated in the Contract Documents, or obvious from observation at the site.

PART 2 – PRODUCTS

2.01 STEEL

A. Structural Steel for use as soldier piles, secant pile walls, rakers, pin piles, cross lot bracing, and wales shall be rolled or fabricated sections conforming to the applicable requirements of ASTM Grade A36 or higher. Structural steel shall be new, or in like-new condition and conform to the latest edition of the AISC Manual of Steel Construction. If used structural steel is proposed, no members with permanent deformations are to be provided or used. Do not splice elements of support systems unless included in the reviewed design submittal.

B. NOT USED.

C. Steel Casing: Steel pipe confirming to ASTM A 252 Grade 3 except with minimum yield strength of 80 ksi. May be new “Structural Grade” (a.k.a. “Mill Secondary”) steel pipe meeting requirements herein but without Mill Certification, free from defects (dents, cracks, tears) and with two coupon tests per truckload delivered to the fabricator.

D. Steel core reinforcement as a minimum shall be standard deformed steel conforming to the requirements of ASTM A615, Grade 60, and Grade 150 a structural steel section conforming to ASTM A36, welded or seamless pipe conforming to ASTM designations: A53, A500, A501, or A618, or equivalent.

2.02 CEMENT GROUT

A. Cement grout for piles shall conform to the requirements of the Massachusetts State Building Code and American Society for Testing and Materials (ASTM) Specification C94 for Ready Mixed Concrete, Third Edition.

B. The cement grout mixture shall have a minimum 28-day compressive strength of 4,000 psi.

2.03 TIMBER LAGGING:

A. Construction grade having a minimum thickness of three inches (3”). Wood shall be new and have been treated for use below ground. If timber lagging is to be left in place, only pressure treated wood shall be used.

2.04 TIEBACKS AND SOIL NAILS

A. Tendons shall be fabricated from single or multiple elements of the following:

1. Steel bars conforming to ASTM Designation A 722, "High Strength Steel Bars for Prestressed Concrete."

2. Seven wire strand conforming to ASTM Designation A416, "Low-Relaxation, Seven Wire Steel Strand for Prestressed Concrete."

3. Wires conforming to ASTM Designation A 421, "Stress Relieved Steel Wire for Pre-stressed Concrete."

4. Compact seven wire strands conforming to ASTM Designation A 779, "Steel Strand, Seven Wire, Uncoated, Compacted for Prestressed Concrete."

B. Anchorages shall be capable of developing 95 percent of the guaranteed minimum ultimate tensile strength of the prestressing steel elements. All anchor head assemblies shall be re-stressable.

C. The bearing plate shall be fabricated from structural steel and capable of developing 95 percent of the guaranteed minimum ultimate tensile strength of the tendon steel elements.

D. Centralizers shall be fabricated from any material, except wood, which is non detrimental to the prestressing steel elements. The centralizer shall position the tendon in the drill hole so a minimum of 0.5 inch of grout cover is provided around each anchor strand. Centralizers shall be spaced at maximum 10-foot intervals.

E. Cement Grout

1. Cement grout used for encapsulating tiebacks shall be a neat cement grout conforming to the shop drawing submittal for the tiebacks, except as noted below.

2. Non shrink grout made with TYPE I, II, or III Portland Cement conforming to ASTM C 150 specifications shall be used. Cement should be fresh and should not contain any lumps or other indications of hydration.

3. Appropriate measures shall be taken to preclude freezing of the grout prior to its reaching design strength.

4. Water for mixing grout shall be potable.

5. Cement grout utilized for tiebacks shall have sufficient strength to achieve an effective bond between grout and the anchor tendon.

6. Redesign of the cement grout mix shall be conducted by the Contractor if performance and/or proof tested tiebacks do not meet the specified criteria for acceptance as determined by the EAG.

2.05 SHOTCRETE

A. Shotcrete material shall be in accordance with the FHWA Geotechnical Engineering Circular No. 7, dated March 2003.

PART 3 – EXECUTION

3.01 GENERAL

A. The Contractor shall install and maintain the excavation support system in accordance with the reviewed and approved working drawings, and in such a manner as to prevent movement, settlement, or loss of ground, removal of fines from the adjacent ground, and damage to or movement of adjacent structures and utilities.[2]

B. Perform field welding by certified welders in accordance with American Welding Society Standards AWS D 1.5, "Bridge Welding Code".

C. The Contractor shall control vibrations associated with installation of earth support systems to meet vibration limits herein and so as not to damage structures. Vibration monitoring may be provided by the Geotechnical Engineer at no cost to the Contractor, as requested by the Owner. If the specified vibration monitoring levels are exceeded or settlement of the structure occurs, the Contractor may be directed by the Owner to adjust the installation procedures and/or to cease earth support installation until modifications to the installation are proposed and reviewed.

D. The Contractor shall make necessary provisions to prevent damage to utilities or other structures due to settlement caused by vibrations or movement of the excavation support system.

E. Protection of Existing Adjacent Structures:

1. The Contractor shall repair all damage to adjacent structures due to ESS work and restore the surfaces and finishes to the original state.

2. The Contractor is hereby advised that construction activities, such as installing steel piles, may cause vibrations strong enough to settle granular and miscellaneous fill layers. The Contractor shall take all necessary steps to minimize vibrations and protect all existing structures and utilities.

3. If in the opinion of the Owner or Geotechnical Engineer the structural integrity of any building is jeopardized, the Contractor shall immediately discontinue further excavation in the affected area and backfill the excavation to mitigate further movement. The backfill shall remain until such time that the Engineer evaluates the impact on the structure and may direct the Contractor to perform any remedial work. The Contractor shall submit proposed remedial measures to the Engineer and Owner for review. Submittals shall include methods and names of subcontractors. Mitigating measures shall be at no additional cost to the Owner.

3.02 SOLDIER PILES AND LAGGING AND SECANT PILE WALL

A. General

1. Piles shall be installed to the locations, line and grades specified in the reviewed Shop Drawings. Pile locations shall be checked during installation and appropriate measures taken as necessary to maintain the correct pile location.

2. Drilled piles shall be designed and constructed in accordance with provisions of the Massachusetts State Building Code, latest edition. All welding, if required, shall be performed by operators who have been previously qualified by tests as prescribed in the “AWS Standard Code”.

3. Pile installation shall be by drilling, and not by driving or vibratory methods.

B. Lines and Grades

1. The Contractor shall be responsible for the correct location of piles and keeping a record of the piles installed.

2. The Contractor shall maintain all location stakes and shall establish all elevations required, including the elevation of the top of the pile and casing, the bottom of the pile and casing, and other location and elevation information required regarding the piles.

C. Method of Installation

1. Pile installation shall be made by non-displacement, low vibration methods such as rotary drilling. Wet rotary drilling methods shall employ sufficient fluid pressure to provide complete removal of the drill cuttings from the hole. Driving or vibratory hammer installation of casing is prohibited.

2. Drilling shall be conducted in such a manner to prevent loss of ground beyond the specified pile diameter. The drilling operation shall employ the use of an outer casing, drilling mud or other methods to stabilize the hole and prevent loss of ground. Drilling mud in the hole shall be sufficiently fluid such that it is readily and fully displaced by the cement grout.

3. All excavation and drilling spoils shall be controlled to minimize disturbances to site conditions and hindrances to pile installation procedures and requirements. All spoils and waste material shall be removed from the site. Disposal of spoils and waste into the local drainage system shall not be allowed.

4. The Contractor is responsible for controlling the amount of dust and dirt created by the pile installation process using whatever methods are most appropriate.

5. Soldier piles shall be completed (casing or HP/W-section installed in pre-drilled holes and grouted/backfilled) the same day the pile is drilled.

6. For soldier piles utilizing core streel, grouting of the piles shall provide complete filling of the pile with a minimum of segregation. Grout shall be placed under pressure by means of a tremie pipe and grout pumped from the bottom of the pile

upward in one continuous operation until the pile is filled and suitable, undiluted cement grout returns at the top of the pile. The cement grout shall not be allowed to fall freely.

7. Core steel shall be centered in the hole with appropriate centering devices.

8. For soldier piles with HP- or W-sections, the pile section shall be centered in the drill hole and lean concrete shall be pumped into the hole using tremie methods from the pile base to 1 foot above the required excavation base to displace water or slurry (if used). Above the concrete, the pile shall be backfilled with sand or flowable fill to the top of existing grade.

9. The casing shall be withdrawn in a controlled manner with the grout level maintained at the top of the pile, to ensure that the grout completely fills the drill hole.

10. The sequence of pile installation shall be such that piles located less than 8 feet from the pile to be drilled are not installed prior to 12 hours after initial grouting of previously installed piles. If connectivity between adjacent micropiles are observed, stop drilling, contact Contractor's Engineer for potential redesign requirements, and notify Geotechnical Engineer.

11. Regrouting shall be scheduled so that adjacent piles have been drilled and initially grouted prior to regrout of each specific pile.

12. Remove sand or flowable fill from pile as excavation progresses, sufficient to place lagging. Follow the excavation closely with placement of lagging. Lagging shall have louvered openings (gaps) between the boards less than 1 inch and at least 1/8-inch. Allowable unlagged height shall be no greater than three feet (3'). Reduce unlagged height if slumping of soil is encountered.

13. Perform excavation for the installation of lagging to minimize the formation of voids. Backpack voids between soil and lagging with sandpack.

14. Excavation shall proceed at a pace that prevents movement of unsupported soil. If unstable material is encountered during excavation, take suitable measures to stabilize it and prevent ground displacement.

15. Maintain a sufficient quantity of material on hand for lagging, bracing and other operations for protection of the Work.

16. If soldier piles and lagging are to be left in place, the installed locations shall be included on the as-built drawing and the ESS shall be cut at least 4 feet below finished grade. The ESS shall also be removed from within 1 foot in all directions around existing utilities to remain, or around new utilities during backfill operation.

D. Tolerances and Criteria for Acceptance

1. Piles shall be installed as close as practicable to the required locations. The pile design shall include a maximum lateral and vertical deviation from the correct location.

2. Piles which are believed to have collapsed, based on the grout take volume, or which are otherwise unsatisfactory as specified above and which cannot be removed or repaired, shall be abandoned and filled with cement grout, and replaced at no cost to the Owner.

3. Piles that are rejected because of damage, mislocation, misalignment, or failure to meet other installation criteria, shall either be supplemented with additional piles or shall be cut off below the design cut-off grade and replaced at no cost to the Owner.

E. Disposal of Excavated Material

1. All excavated material, slurry and soil shall be removed and legally disposed of off site by the Contractor. Prior to drill water discharge, the excess water shall pass through a sedimentation basin and geotextile filter system to remove soil fines.

3.03 RAKERS, WALES, AND STRUTS

A. Use rakers, wales, struts, corner braces to provide support of the excavation walls internally as required. Include web stiffeners, plates, brackets, or angles as required to prevent rotation, crippling or buckling of connections and points of bearing between structural steel members. Allow for eccentricities due to fabrication and assembly. Consider effects of temperature changes.

B. Install and maintain all support members in continuous tight contact with each other and with the wall being supported.

C. Preload all bracing members (including rakers, comer braces, and struts) in accordance with methods, procedures and sequence as described on the reviewed shop drawings. Coordinate excavation work with installation of bracing and preloading. Use steel shims and steel wedges, welded or bolted in place, to maintain the preloading force in the bracing after release of the jacking equipment pressure. Wood shims or wedges shall not be used.

D. Braces shall be preloaded to fifty (50) percent of the maximum design load. Provide means to control the fluctuation of loading due to temperature variations.

E. Accomplish preloading by jacking struts, rakers, etc. in place against the lateral excavation support system walls, or by other methods reviewed by the Geotechnical Engineer.

F. Coordinate locations of all bracing and components thereof for temporary lateral excavation support with locations of permanent structural steel and foundation wall elements.

3.04 TIEBACKS

A. Tiebacks shall be designed and installed by the Contractor in accordance with the current edition of the "Recommendations for Prestressed Rock and Soil Anchors", by the Post-Tensioning Institute.

B. Excavation support wall, and other support system members incorporated in a system using tiebacks, shall be designed to resist the vertical components of the tieback loads without settlement during any stage of the excavation and construction.

C. Coordinate locations of all bracing and components thereof for temporary lateral excavation support with locations of permanent foundation wall elements.

D. Install tiebacks in accordance with reviewed shop drawings and as specified herein.

E. Tiebacks shall be installed through sleeves or holes provided in the earth support system. Prevent loss-of-ground and water seepage at the tieback locations. Implement remedial measures immediately if loss-of-ground or seepage occurs at these locations.

F. Tiebacks shall be installed by duplex drilling methods only, using internal flushing methods only which provide return of wash fluid and cuttings through the inside of the outer casing. Outer casing shall be extended for the entire tieback length. Methods of installation shall be used which prevent the loss-of-ground, e.g. collapsing hole.

G. Each tieback must be capable of being re-tensioned, if necessary.

H. Each tieback installed for support of earth excavations shall be tested to verify and establish the tieback capacity. All testing shall be performed in the presence of the Geotechnical Engineer. Performance tests shall be performed on a minimum of 10 percent of tiebacks for each design, as selected by the Geotechnical Engineer, to verify the tieback design. Tiebacks grouted into differing strata will be considered a different design. All other tiebacks shall be proof-tested.

I. Performance Tests shall be conducted in accordance with procedures described in the current edition of the "Recommendations for Prestressed Rock and Soil Anchors", by the Post-Tensioning Institute.

J. Proof Tests shall be conducted in accordance with procedures described in the current edition of the "Recommendations for Prestressed Rock and Soil Anchors", by the Post--Tensioning Institute.

K. Acceptance of performance tests and proof tests shall be in accordance with the current edition of the "Recommendations for Prestressed Rock and Soil Anchors", by the Post-Tensioning Institute.

L. Any tieback which does not meet the criteria for acceptance for its design capacity can only be incorporated in the bracing system using 67 percent of the load that can be

maintained and meets the criteria for acceptance. Re-groutable anchors will be accepted at full capacity after re-grouting and acceptable proof-testing.

M. Additional tests shall be performed when any changes are made in the tieback assembly or installation procedures at no additional cost to the Owner.

N. De-tension tiebacks in accordance with the proposed construction sequence as reviewed by the Geotechnical Engineer. Tie-back locations that are not removed shall be surveyed and included in the as-built survey.

3.05 SLIDE RAIL SYSTEM

A. Slide Rail systems shall consist of a temporary modular and interlocking system of vertical beams and shoring panels. The slide rail system shall be installed in accordance with the manufacturer requirements and at a minimum, the vertical beams and the shoring panels shall be concurrently advanced with the excavation.

B. Slide rail systems shall not be used within 15 feet of existing utilities or buildings, unless approved in writing by the Owner/Owner's agent. If approved by the Owner/Owner's Agent, the requirements in this Specification (e.g., limiting deflections, contractor responsibilities) shall still apply.

3.06 SOIL NAIL WALL

A. Shotcrete Installation

1. Do not apply shotcrete to frozen surfaces, during high winds, heavy rains, or when temperatures are below 40-degrees Fahrenheit.

2. Direct the shotcrete at right angles to the receiving surface except when shooting ground reinforcing bars. Apply shotcrete in a circular fashion to build up the required layer thickness. Apply shotcrete in a steady, uninterrupted flow. If the flow becomes intermittent, direct the flow away from the work area until it becomes steady.

3. The surface of each shotcrete layer shall be uniform and free of sags, drips or runs.

4. Remove laitance, loose material, and rebound. Promptly remove rebound from the work area.

5. Taper construction joints to a thin edge over a distance of at least 1 foot. Wet the joint surface before placing additional shotcrete at the joint. Do not use square construction joint.

6. Soil nail locations shall be surveyed and included in the as-built survey.

3.07 MONITORING PROGRAM

A. The Owner's Engineer will install a survey monitoring system, consisting of an automated total station, that will survey ESS, existing buildings, dams, structures and site

improvements located in proximity of the Work. The survey data will be provided to the Contractor, if requested, throughout the course of the project.

B. If the deflection action limits as specified herein are reached at any time during the work, the Contractor shall be notified and shall immediately stop work and provide a contingency plan for review.

C. Monitoring Deflection of Support of Excavation System

1. Owner's Engineer shall install monitoring points on all ESS that are 15 feet or greater in depth. Contractor shall provide access for Engineer to install the monitoring points after installation of ESS, and prior to excavation.

2. In addition to the ESS system, Owner's Engineer will install monitoring points on existing buildings if the excavations are within 25 feet of the buildings and for excavations 15 feet or deeper.

3. Owner's Engineer shall measure deflection at least daily during excavation and weekly after excavation is complete.

D. Deflection Limits

1. A threshold limit of 0.5 inches, or 0.2% of the wall height, whichever is greater, in horizontal or vertical directions shall be set. If the threshold limit is achieved, survey frequency will be increased until the movement stabilizes. Once the movement stabilizes, daily or weekly readings will be re-established.

2. The action limit for movement is 0.75 inch in any direction, or 0.3% of the wall height, whichever is greater. If the action limit is achieved, Contractor shall be notified to stop work and provide alternate methods to reduce additional movement.

FIGURE 1

NEW U. S. BUREAU OF MINES CRITERIA
FROM REPORT RI-8507 (November, 1980)

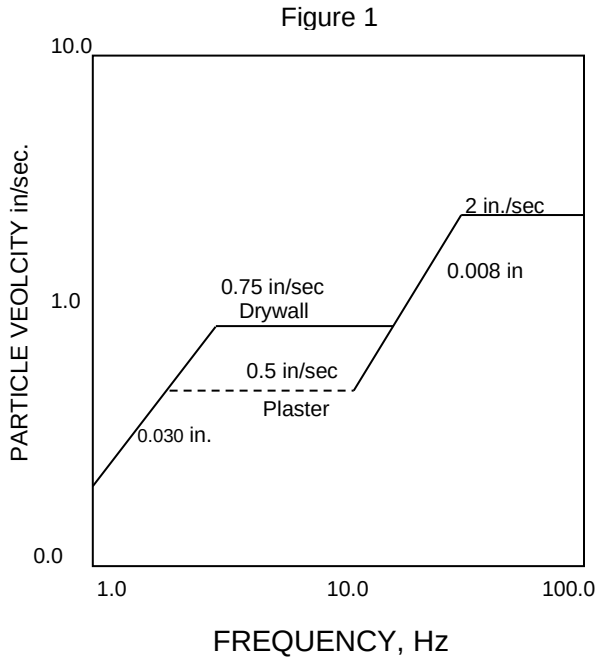

END OF SECTION

NO TEXT ON THIS PAGE

ATTACHMENT BE – 40 05 07 PIPE SUPPORTS

SECTION 40 05 07
PIPE SUPPORTS[1]

PART 1 – GENERAL

1.01 THE REQUIREMENT

A. Furnish all equipment, labor, materials, and design calculations required to provide pipe supports in accordance with the Contract Documents.

B. Note that this specification delineates work for both the Contractor and the MISCELLANEOUS AND ORNAMENTAL IRON Subcontractor. Both shall be responsible for the design, furnishing and installation of pipe supports systems. The Contractor shall be responsible for all work related to vendor supplied pipe supports. The MISCELLANEOUS AND ORNAMENTAL IRON Subcontractor shall be responsible for all work related to fabricated supports. Where required the Contractor and MISCELLANEOUS AND ORNAMENTAL IRON Subcontractor shall coordinate work.

1.02 RELATED WORK SPECIFIED ELSEWHERE

A. Section 01 73 23 – Anchorage and Bracing of Non-Structural Components

B. Division 03 – Concrete

C. Section 05 05 13 – Galvanizing

D. Section 05 00 00 – Miscellaneous & Ornamental Iron

E. Section 05 05 23 – Metal Fastening

F. Section 05 10 00 – Metal Materials

G. Section 05 12 00 – Structural Steel

H. Section 05 13 00 – Stainless Steel

I. Section 05 50 00 – Metal Fabrications

J. Section 40 05 00 – Basic Mechanical Requirements

1.03 SUBMITTALS

A. Pipe support submittals will not be reviewed prior to review and acceptance of pipe layout submittal. Pipe support submittal shall be fully coordinated with approved pipe layout submittal. Contractor and MISCELLANEOUS AND ORNAMENTAL IRON

03-28-22

1 Addendum No.5

Subcontractor shall use approved piping layout submittal drawings to show proposed pipe support type and location with accurate dimensions to demonstrate that supports meet all specified requirements.

B. Applicable and associated cut sheets and drawings for materials and support components shall be submitted with the Shop Drawings in accordance with or in addition to the submittal requirements specified in Section 01 33 00 – Submittals, Section 40 05 00 – Basic Mechanical Requirements and other referenced Sections above.

1. Catalog cut information on all system components such as pipe supports, hangers, guides, anchors, and channel-type supports.

2. Drawings of the piping support systems, locating each support, brace, hanger, guide, component and anchor. Identify support, hanger, guide and anchor type by catalog number and Shop Drawing detail number.

3. With each piping support system Shop Drawing, the Contractor and MISCELLANEOUS AND ORNAMENTAL IRON Subcontractor shall attach calculations prepared and sealed by a Professional Engineer, licensed in the State or Commonwealth in which the project is located, showing that the piping support system complies with the specified requirements, including all building code and seismic code requirements pertaining to support of piping and other non-structural components. See Section 01 73 23 – Anchorage and Bracing of Non-Structural Components.

4. The design of the pipe support system shall be by both the Contractor and MISCELLANEOUS AND ORNAMENTAL IRON Subcontractor. Both entities shall provide design for the individual pipe supports, and they shall collaborate to provide a pipe support design of the entire system.

5. Table showing the manufacturer's recommended hanger support spacing for PVC, CPVC and FRP pipe for the services listed in Section 40 06 20 – Process Pipe, Valve and Gate Schedules.

PART 2 – PRODUCTS

2.01 GENERAL

A. The Contractor and MISCELLANEOUS AND ORNAMENTAL IRON Subcontractor shall be responsible for the design of all piping support systems unless noted otherwise herein. The absence of pipe supports and details on the Drawings shall not relieve the Contractor and MISCELLANEOUS AND ORNAMENTAL IRON Subcontractor of the responsibility of providing a pipe support design sealed by a Professional Engineer, licensed in the State or Commonwealth in which the project is located. Standard details for pipe supports have been included on the Drawings to define minimum requirements

as to the types of Contractor and MISCELLANEOUS AND ORNAMENTAL IRON Subcontractor designed pipe supports that will be acceptable.

B. Where a specific location or type of support is shown on the Drawings, the location and type shall be incorporated in the Contractor and MISCELLANEOUS AND ORNAMENTAL IRON Subcontractor's pipe support design.

C. Where special pipe support fabrications are required, products and execution shall be as specified in Section 05 50 00 – Metal Fabrications and other related and referenced Sections of the Specifications.

D. Existing piping support systems to support new piping shall only be used if the Contractor and MISCELLANEOUS AND ORNAMENTAL IRON Subcontractor can show and demonstrate by submitting supporting calculations that they are adequate for the additional load imposed by the new piping, or if they are strengthened to support the additional load.

E. Contractor and MISCELLANEOUS AND ORNAMENTAL IRON Subcontractor's pipe support design should include, but not be limited to, the following criteria and loads imposed on the piping system:

1. Thrust Loads based on the design pressures as specified in Piping Schedules in Section 40 06 20 – Process Pipe, Valve and Gate Schedules. Pipe support design shall not utilize process equipment for thrust restraint or support of piping loads.

2. Dead loads and live loads per the latest version of ASCE/SEI 7 or the local building code if more stringent. Loads shall include, but not be limited to, the following:

   a. Weight of pipe

   b. Weight of pipe contents

   c. Weight of insulation

   d. Ice loads (If applicable by location, ice loads per code shall be applied as indicated in the governing building code)

   e. Seismic loading requirements and conditions as specified in the governing building code and referenced seismic design codes. Refer to Section 01 73 23 – Anchorage and Bracing of Non-Structural Components and the structural code drawing for project specific seismic design criteria. Seismic and sway bracing shall be provided at maximum 10-foot centers.

   f. Wind loads

3. Loads associated with thermal expansion and contraction of the piping system over the full range of potential temperatures the piping system could experience that should include, but not be limited to, the following:

    a. Ambient temperature range per local historical weather data (historic high and low obtained from NOAA)

    b. Process operating temperature range (from 0 degrees Celsius to 25 degrees Celsius)

    c. Exposure to sunlight where applicable

4. Additional pipe support design considerations shall include the following:

    a. A minimum safety factor of 2 or as approved by the Engineer, based upon the yield strength of the support material, shall be used for pipe supports, braces, hangers, and guides as well as for beam and column members used in channel-type support systems.

    b. The horizontal pipe hanger and/or floor support spacing shall be as recommended by the pipe and/or hanger manufacturer but shall not exceed 10 feet on center unless indicated otherwise herein or on the Drawings.

    c. The design, sizing and spacing of anchor bolts, including concrete anchors, shall be based on withstanding shear and pullout loads imposed by loading at each particular support. The minimum anchor bolt size shall be ½ inches in diameter. Refer to Section 05 05 23 – Metal Fastening.

F. Pipe supports shall not obstruct equipment removal, access spaces or walkways.

2.02 HANGERS AND SUPPORTS

A. All piping shall be adequately supported and braced by means of steel hangers and/or supports, concrete piers, supplemental lateral bracing components, pre-fabricated brackets, or otherwise as may be required by the location and forces applied per governing code, including gravity and lateral forces from earthquake and/or wind (if outdoors). Generally, concrete supports shall be used where pipe centerline is less than 3 feet above floor, and hangers above 6 feet unless specified or shown otherwise. Supports shall be not more than 10 feet on center for steel and cast iron, 5 feet on center for plastic unless otherwise shown on the Drawings or required by the specific manufacturer. All necessary inserts or appurtenances shall be furnished and installed in the concrete or structures for adequately securing hangers and supports to the structure. Refer to Standard Detail Drawings.

    1. Metal pipe support materials, where stainless steel pipe is supported, shall be Type 304L stainless steel meeting the requirements of Section 05 13 00 – Stainless Steel.

2. Metal pipe support materials, where carbon steel, ductile or other ferrous pipe is supported, shall be galvanized carbon steel meeting Section 05 12 00 – Structural Steel and Section 05 05 13 – Galvanizing unless indicated otherwise on the Drawings or in the Specifications or by the Engineer.

3. Metal pipe supports indicated as standard type pipe hangers are designed and detailed for gravity loading only. Resulting lateral loads from wind, earthquake, or other lateral loads per code, or special loading conditions during construction, shall be applied to the pipe in accordance with the governing building code. Supplemental lateral stiffening members (when necessary) shall be provided along pipe or at gravity supports using appropriate supplemental members and connections when required by calculations. The Contractor shall include design calculations and details with all pipe hanger and support submissions for review by the Engineer. The main structure and structural components that will support the pipe hangers and other appurtenant components of the facility have been designed to resist all resulting secondary lateral loading from pipe hangers and other non-structural members for gravity and resulting lateral loads.

B. Hangers and supports shall conform to the following requirements:

1. All fabricated metal hangers and supports shall be capable of adjustment after installation. Different types of hangers and supports along a pipe length, including bends, shall be kept to a minimum.

2. Hanger rods shall be straight and vertical. Chain, wire, strap, or perforated bar hangers shall not be used. Hangers shall not be suspended from other piping.

3. Vertical piping shall be properly supported at each floor and between floors by stays or braces to prevent rattling and vibration.

4. Supports and hangers for plastic and FRP piping shall include wide saddles or bands as recommended by the manufacturer and approved by the Engineer to distribute load and thus avoid localized deformation of the pipe.

5. Hanger and supports shall prevent contact between dissimilar metals by use of copper plated, rubber, vinyl coated or stainless-steel hangers.

6. Ferrous pipes to be painted shall be painted in accordance with Section 09 90 00 – Painting. Ferrous pipes that require painting or galvanizing shall be supported by galvanized hangers and supports. Stainless steel piping shall be supported by stainless steel saddles and straps (if required).

7. Copper piping shall be supported by plastic coated or copper plated steel hangers and supports.

8. Plastic piping shall be supported by plastic coated steel hangers and supports.

9. Hangers and supports shall provide for thermal expansion throughout the full operating temperature range.

10. Expansion and adhesive type anchors used for pipe hangers and supports shall be Type 316 stainless steel.

C. Metallic hangers and supports may be standard make by Anvil International, Inc., "Witch" by Carpenter & Paterson, Ltd., B-Line Systems, Inc., or equal; and data on the types and sizes to be used shall be furnished to the Engineer for approval. Metallic support system brackets, rods, support clips, clevis hangers, hardware, etc. shall be cast iron or welded steel construction. All gravity type hangers and supports shall be restrained laterally to resist seismic loading and other loading as required by the governing code.

D. Non-metallic support system shall be a heavy-duty channel framing system. Channel frames shall be manufactured by the pultrusion process using corrosion grade polyester or vinylester resins. All fiberglass construction shall include suitable ultraviolet inhibitors for UV exposure and shall have a flame spread rating of 25 or less per ASTM E84. Piping accessories, pipe clamps, clevis hangers, support posts, support racks, fasteners, etc., shall be constructed of vinylester or polyurethane resin. Non-metallic support systems shall be standard make Aickinstrut by Aickinstrut, Inc., Unistrut Fiberglass by Unistrut, Inc., Enduro Fiberglass Systems, or equal. The Contractor shall submit data on the types and sizes of approval. Unless otherwise shown or specified the Contractor shall provide support spacings in the conformance with the pipe and support system manufacturer's requirements.

2.03 PROCESS AIR PIPE SUPPORTS

A. Unless specifically designed and detailed on the Drawings, process air piping shall be supported by slide bearings as manufactured by Fluorocarbon Company, Anaheim, California, Anvil International, Inc., Portsmouth, New Hampshire, or equal.

B. The slide bearing material shall be 3/32-inch-thick, 25 percent glass-fiber reinforced structural grade Teflon. The bearing material shall withstand at least 1000 psi (compression) at 250°F with a coefficient of friction between 0.05 and 0.08. The performance of bearing and bonding materials shall be unaffected by continual immersion in wastewater containing domestic and industrial waste at a temperature of 210°F.

C. Non-submerged slide bearing type supports shall be provided with a bearing material covering a 120° arc centered at the bottom of the pipe. The Teflon shall be at least 4 inches wide at the underside of the pipe and 8 inches wide at the top of the support. The Teflon material shall be hot press bonded to 10 ga. stainless steel plates for welding to the bottom of the pipe and securing to the top of the support.

D. Submerged slide bearing type supports shall be provided with Teflon bonded to the underside of the hold down strap and the top of the pipe such that the sliding surface is formed between two sheets of Teflon. Each surface shall cover a 120° arc centered at

the top of the pipe. On the underside of the strap the Teflon bearing shall be hot press bonded directly to the stainless-steel strap or to a 10 ga. stainless steel plate for welding to the strap. At the top of the pipe, the Teflon shall be bonded to a 10 ga. stainless steel plate for welding to the pipe.

E. Pipe straps shall not tightly bind the pipe, but shall provide 1/16-inch clearance over the top 180° of the pipe surface.

F. Wall bracket supports shall be used where shown for pipe to be installed adjacent to a wall. Where it is not feasible to install hanger supports, adjustable pipe saddle supports may be used with the permission of the Engineer. Concrete pier supports shall be spaced at a maximum distance of 10 feet and shall be at least 12” wider than O.D. of pipe and 10 inches thick unless otherwise shown on the Drawings. Refer to the Standard Detail Drawings.

G. Small diameter piping (6-inches in diameter or less) shall not be strapped or otherwise secured directly to walls. Suitable wall offset brackets of an approved type shall be used. Anchors shall not be attached using percussion fasteners.

H. Sliding surfaces shall be protected from accumulation of dirt, grit, or other foreign matter.

I. Slide bearings shall be capable of adequately supporting the design loads and shall be attached to pipe and supports as specified and recommended by the manufacturer.

J. The slide bearings shall be installed in the locations shown or indicated on the Drawings, at required elevations, true to orientation and level, assuring that the correct half of each bearing is in its proper position. The Contractor MISCELLANEOUS AND ORNAMENTAL IRON Subcontractor shall store the bearings to protect them from mechanical damage prior to installation and shall protect the same during and after installation from contamination and damage due to placing of concrete and other materials. The Contractor and MISCELLANEOUS AND ORNAMENTAL IRON Subcontractor shall clean the operating surfaces of bearings thoroughly before final assembly.

K. The Contractor and MISCELLANEOUS AND ORNAMENTAL IRON Subcontractor shall note that all pipe support locations are not shown on the Drawings and shall follow the Specifications herein in locating supports. Where deviations and modifications are required, they shall be made only with the permission of the Engineer. A detailed layout of pipe supports and hangers shall be submitted for approval.

PART 3 – EXECUTION

3.01 GENERAL INSTALLATION REQUIREMENTS

A. Support piping connections to equipment by pipe support and not by the equipment.

B. Support large or heavy valves, fittings, flow meters and appurtenances independently of the connected piping.

C. Support no pipe from the pipe above it.

D. Support piping at changes in direction or in elevation, adjacent to flexible joints, expansion joints, and couplings, and where shown.

E. The Contractor and MISCELLANEOUS AND ORNAMENTAL IRON Subcontractor shall not install piping supports and hangers in equipment access areas or bridge crane runs.

F. Brace hanging pipes against horizontal movement by both longitudinal and lateral sway bracing.

G. Install pipe anchors (fixed supports and/or guides) where shown and/or as may otherwise be required to withstand expansion thrust loads and to direct and control thermal expansion. The Contractor and MISCELLANEOUS AND ORNAMENTAL IRON Subcontractor may install additional pipe anchors and flexible couplings to facilitate piping installation, provided that complete details describing location, pipe supports and hydraulic thrust protection are submitted.

END OF SECTION

NO TEXT ON THIS PAGE

ATTACHMENT BF – 43 25 17 SUMP PUMPS

SECTION 45 25 17
SUMP PUMPS[1]

PART 1 – GENERAL

1.01 DESCRIPTION

A. Sump pumps. See schedule on Drawings for pump capacity and head.

B. A complete listing of all acronyms and abbreviations are included in Section 22 05 00 – Basic Plumbing Requirements.

1.02 RELATED SECTIONS

A. Section 01 33 00 – Submittal Procedures

B. Section 01 73 23 – Seismic Anchorage and Bracing: Seismic Restraint

C. Section 01 75 00 – Checkout and Startup Procedures

D. Section 01 78 23 – Operations and Maintenance Data

E. Section 01 79 00 – Instruction of Owner's Personnel

F. Section 43 20 00 – Pumps General

G. Section 45 05 00 – Basic Mechanical Requirements

H. Section 46 00 00 – Equipment General Provisions

I. Section 26 29 13 – Low-Voltage Enclosed Motor Controllers

1.03 APPLICABLE PUBLICATIONS

A. The publications listed below form a part of this specification to the extent referenced. The publications are referenced in the text by the basic designation only.

B. American National Standard Institute (ANSI)/Hydraulic Institute (HI):

1. 1.1-1.2 – Rotodynamic Centrifugal Pumps for Nomenclature and Definitions

2. 1.3 – Rotodynamic Centrifugal Pumps for Design and Application

---

[1] Addendum No. 5

3. 1.4 – Rotodynamic Centrifugal Pumps for Manuals Describing Installation, Operation, and Maintenance

C. ASTM International (ASTM):

1. A48/A48M – Standard Specification for Gray Iron Castings

2. A532/A532M – Standard Specification for Abrasion-Resistant Cast Irons

3. B584 – Standard Specification for Copper Alloy Sand Castings for General Applications

D. National Electrical Manufacturers Association (NEMA):

1. ICS – Industrial Control and Systems: Enclosures

2. 250 – Enclosures for Electrical Equipment (1000 Volts Maximum)

E. Underwriters' Laboratories, Inc. (UL):

1. 508 - Standards for Industrial Control Equipment

1.04 SUBMITTALS

A. Submittals, including number of required copies, shall be submitted in accordance with Section 01 33 00 – Submittal Procedures.

B. Information and material submitted under this Section shall be marked “SUBMITTED UNDER SECTION 43 25 17 – SUMP PUMPS”, with applicable paragraph identification.

C. Manufacturer's Literature and Data including: Full item description and optional features and accessories. Include dimensions, weights, materials, applications, standard compliance, model numbers, size, and capacity.

1. Pump:

a. Manufacturer and model.

b. Operating speed (rpm).

c. Capacity.

d. Characteristic performance curves.

2. Electric Motor:

a. Manufacturer, frame, and type.

b. Speed.

c. Current Characteristics and W (HP).

d. Efficiency.

3. Control panel.

4. Sensors.

D. Certified copies of all the factory and construction site test data sheets and reports.

E. Complete operating and maintenance manuals including wiring diagrams, technical data sheets and information for ordering replacement parts:

1. Include complete list which indicates all components of the system.

2. Include complete diagrams of the internal wiring for each item of equipment.

3. Diagrams shall have their terminals identified to facilitate installation, operation and maintenance, and troubleshooting.

4. Refer to section 01 78 23 – Operation and Maintenance Data for additional requirements.

1.05 QUALITY ASSURANCE

1. UL Compliance: Comply with UL 778 for motor-operated water pumps.

2. Design Criteria:

a. Pump sizes, capacities, pressures, operating characteristics and efficiency shall be as scheduled.

b. Head-capacity curves shall slope up to maximum head at shut-off. Select pumps near the midrange of the curve, and near the point of maximum efficiency, without approaching the pump curve end point and possible cavitation and unstable operation. Select pumps for open systems so that required net positive suction head (NPSHR) does not exceed the net positive head available (NPSHA).

c. Pump Driver: Furnish with pump. Size shall be non-overloading at any point on the head-capacity curve, including in a parallel or series pumping installation with one pump in operation.

d. Provide all pumps with motors, impellers, drive assemblies, bearings, coupling guard and other accessories specified. Statically and dynamically balance all rotating parts.

e. Furnish each pump and motor with a nameplate giving the manufacturers name, serial number of pump, capacity in GPM and head in feet at design condition, horsepower, voltage, frequency, speed and full load current and motor efficiency.

f. Test all pumps before shipment. The manufacturer shall certify all pump ratings.

g. After completion of balancing, provide replacement of impellers or trim impellers to provide specified flow at actual pumping head, as installed.

B. Provide start-up training of pumps and controls in accordance with 43 20 00 – Pumps General, and Section 01 79 00 – Instruction of Owner's Personnel. Provide services of manufacturer's technical representative for four hours to instruct Owner's Personnel in operation and maintenance of units.

1.06 AS-BUILT DOCUMENTATION

A. Submit manufacturer's literature and data updated to include submittal review comments and any equipment substitutions.

B. Submit operation and maintenance data updated to include submittal review comments, substitutions and construction revisions shall be in electronic version on compact disc or DVD inserted into a three-ring binder. All aspects of system operation and maintenance procedures, including piping isometrics, wiring diagrams of all circuits, a written description of system design, control logic, and sequence of operation shall be included in the operation and maintenance manual. The operations and maintenance manual shall include troubleshooting techniques and procedures for emergency situations. Notes on all special systems or devices such as damper and door closure interlocks shall be included. A List of recommended spare parts (manufacturer, model number, and quantity) shall be furnished. Information explaining any special knowledge or tools the owner will be required to employ shall be inserted into the As-Built documentation.

C. The installing contractor shall maintain as-built drawings of each completed phase for verification; and, shall provide the complete set at the time of final systems certification testing. As-built drawings are to be provided, and a copy of them in Revit 2022 provided on compact disk or DVD. Should the installing contractor engage the testing company to provide as-built or any portion thereof, it shall not be deemed a conflict of interest or breach of the 'third party testing company' requirement.

D. Certification documentation shall be provided to Owner's Representative 10 working days prior to submitting the request for final inspection. The documentation shall include all test results, the names of individuals performing work for the testing agency on this project, detailed procedures followed for all tests, and a certification that all results of tests were within limits specified.

1.07 ACCEPTABLE MANUFACTURERS

A. Myers (basis of design)

B. Zoeller

C. Hydromatic

D. Approved equal

PART 2 – PRODUCTS

2.01 TREATED WATER MANHOLE SUMP PUMP

A. Centrifugal, vertical, submersible pump and motor, designed for continuous-duty water service with temperatures up to 130 °F and intermittent temperatures up to 140 °F. Driver shall be electric motor. Support shall be rigid type found invert of concrete sump.

   1. Pump housings shall be cast iron, bronze, aluminum or stainless steel. Cast iron and aluminum housings for submersible pumps shall be epoxy coated. Bio-based materials shall be utilized when possible.

   2. Impeller shall be statically and dynamically balanced, keyed and secured to shaft, two vane enclosed type, constructed of epoxy coated cast iron

   3. Shaft shall be stainless steel or other approved corrosion resisting metal.

   4. Shaft seal shall be mechanical constructed of carbon and ceramic face materials, with all metal parts and springs for seals being 300 series stainless steel.

   5. All fasteners shall be 300 series stainless steel.

B. Motor shall be designed for 115 VAC single phase power with Class A insulation on the stator windings, operating at 1650 rpm.

   1. Single phase, 1/2-hp motor shall be shaded pole type.

   2. Motor housing shall be constructed of epoxy coated cast iron.

   3. The winding housing shall be filled with clean dielectric oil to lubricate bearings and seals and transfer heat from the windings to the outer shell.

   4. Motor shall include a heat sensor attached to the top of the motor windings and wired in series with the windings to stop the motor if the winding temperature exceeds 220 °F. Sensor switch automatically resets when motor cools to a safe operating temperature.

5. Motor shall be capable of operating over the full range of the performance curve without overloading the motor or causing any objectionable noise or vibration.

6. The motor shall be furnished with two bearings to support the rotor; an upper sleeve bearing for radial loads and a lower sleeve bearing with thrust pad for radial and thrust loads.

C. The pump shall operate automatically via non-mercury float switches. The pumps shall operate to maintain a water below the elevation of 424.5 at all times.

PART 3 – EXECUTION

3.01 STARTUP AND TESTING

A. Pump installation to comply with ANSI/HI 1.4 for sump pumps.

B. Leak Test: Charge piping system and test for leaks. Test until there are no leaks. Make tests as recommended by product manufacturer and listed standards and under actual or simulated operating conditions and prove full compliance with design and specified requirements. Tests of the various items of equipment shall be performed simultaneously with the system of which each item is an integral part.

C. The tests shall include system capacity and all control and alarm functions.

D. When any defects are detected, correct defects and repeat test.

END OF SECTION

NO TEXT ON THIS PAGE