Existing Plans

RICN 5302

RICN 8650

RICN 2019-CB-011

RICN 5302

STATE	FED. AID PROJ. NO.	LOCAL YEAR	SHEET NO.	TOTAL SHEETS
R.I.	F-05(1)	POST WAR	30 A	186

INDEX OF SHEETS

SHEET NO.	30 A	243,001	KEY SHEET
" "	30 B	243,002	LOCATION PLAN (NOTES & QUANTITIES)
" "	30 C	243,003	GENERAL PLAN
" "	30 D	243,004	ELEVATION & SECTIONS
" "	30 E	243,005	DECK
" "	30 F	243,006	STRUCTURAL STEEL
" "	30 G	243,007	WEST ABUTMENT
" "	30 H	243,008	EAST ABUTMENT
" "	30 J	243,009	S.W. RETAINING WALL
" "	30 J	243,010	S.E. RETAINING WALL
" "	30 K	243,011	N.E RETAINING WALL
" "	30 L	243,012	N.W. RETAINING WALL
" "	30 M	243,013	REINFORCEMENT
" "	30 N	243,014	TYPICAL ROAD SECTIONS & GRADE PLAN
" "	30 O	243,015	ROAD SECTIONS
" "	30 P	243,016	ROAD SECTIONS
" "	30 Q	243,017	R.R. ELECTRICAL WORK

KEY SHEET

BRIDGE NO. 243 & APPROACHES

TO BE KNOWN AS

LAFAYETTE R.R. BRIDGE

NORTH KINGSTOWN
WASHINGTON COUNTY
PART OF FEDERAL AID PROJECT NO. F-05 (1)
CONTRACT NO. 3

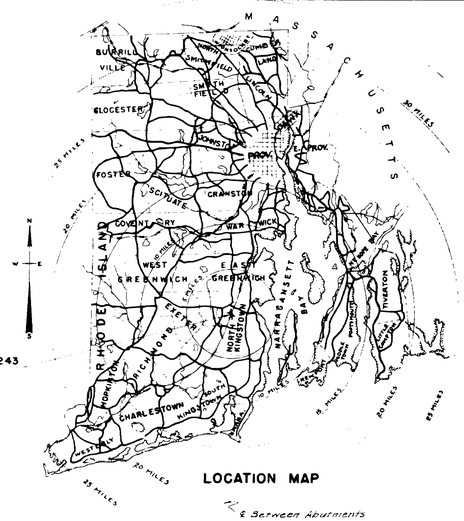

LOCATION MAP

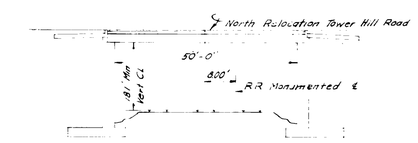

SECTION NORMAL TO RAILROAD

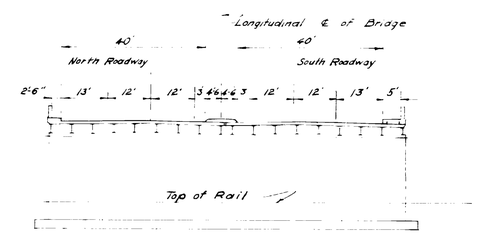

SECTION NORMAL TO HIGHWAY

CLEARANCE DIAGRAMS

SCALE: 1" = 20'

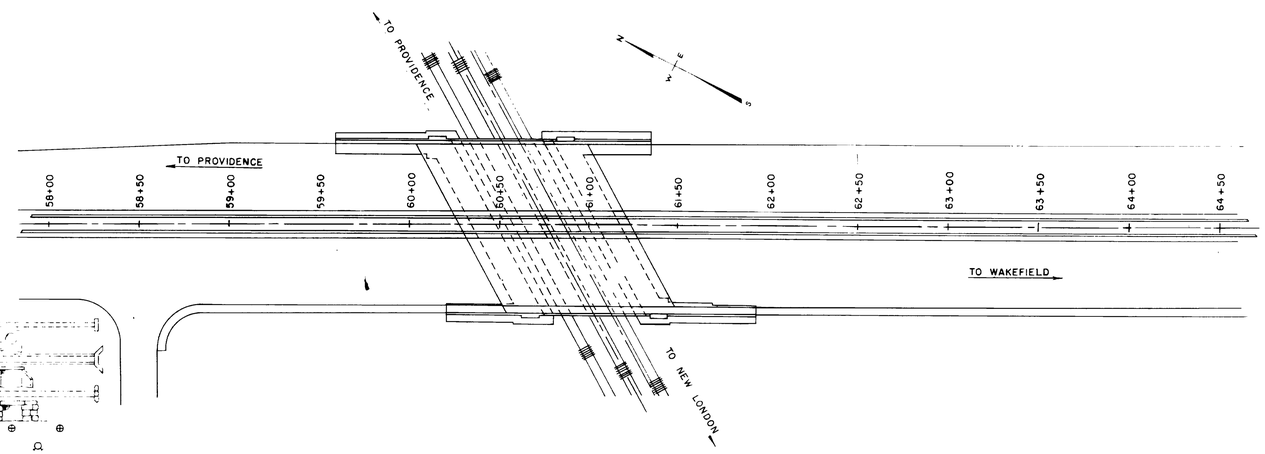

LAYOUT

SCALE 1 IN. **40 FEET**

CONVENTIONAL SIGNS

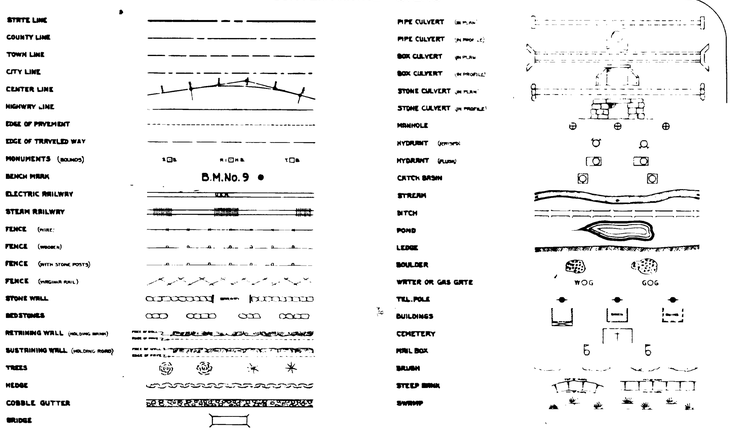

SCALES OF DRAWINGS

Plans, - -	1 inch = 40 feet, 20 FEET. 1/8", 3/16", 1/4", 3/8", 1/2", 3/4", 1 1/2", 3", 6" = 1'-0"
Profiles, - -	1 inch = 40 feet Horizontal
" - -	1 inch = 8 feet Vertical
Cross Sections,	1 inch = 10 feet

BASE OF LEVELS
MEAN SEA LEVEL

EDGAR P. SNOW
No. 916
REGISTERED
PROFESSIONAL ENGINEER

C. W. RIVA CO.
CONSULTING ENGINEERS
PROVIDENCE, RHODE ISLAND

243,002

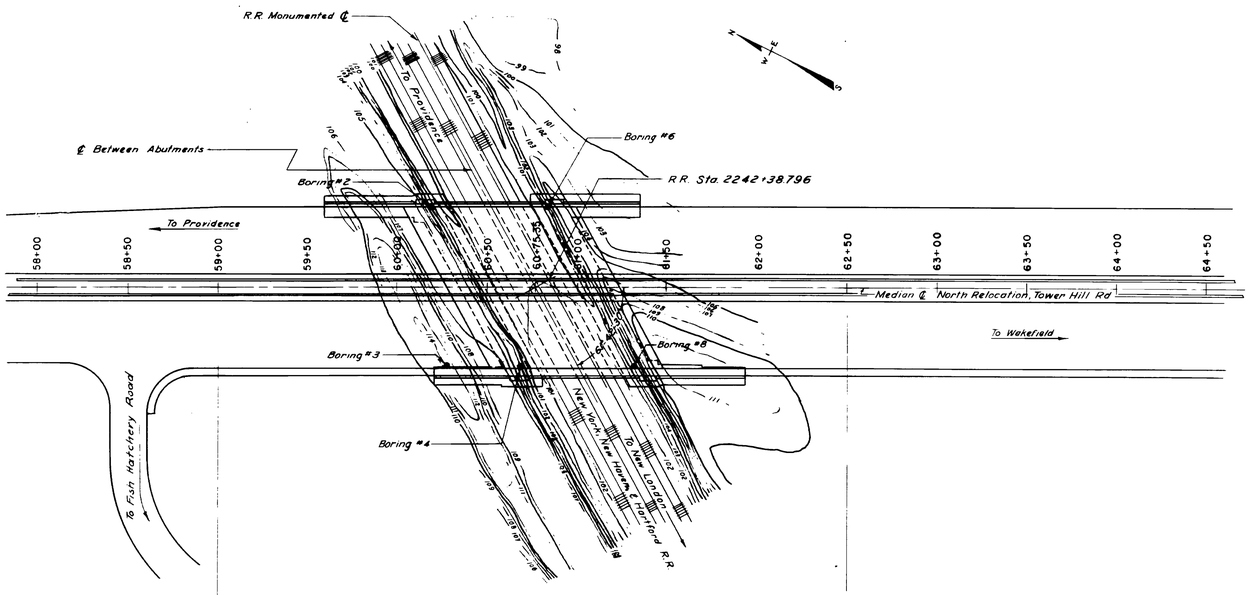

LOCATION PLAN

SCALE: 1" = 40'

LIMITS OF ROAD QUANTITES ON BRIDGE PLANS

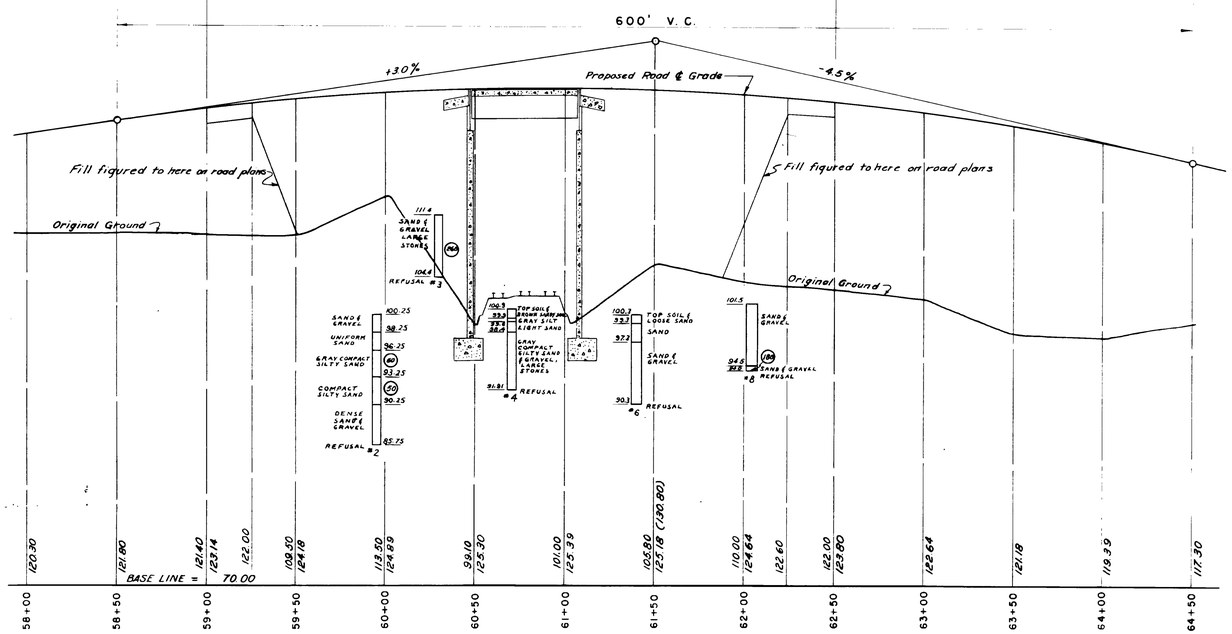

PROFILE

SCALE: 1" = 40' HORIZONTAL
1" = 8' VERTICAL

NOTE
Figures in ○ indicate No. of blows per foot for a 300# hammer falling 18" using a 2" I.D. sampler.

NOTES

SITE BY THE ENGINEER. BRIDGE BENCH WILL BE ESTABLISHED AT THE
BRIDGE BENCHES: B.M. 34-C S.E. CORNER OF 2ND. CONCRETE STEP AT SIDE ENTRANCE OF HOUSE STA. 67+68±, LEFT 166.0'± EL 99.341
B.M. 33-C CHISELED CIRCLE ON BOULDER STA. 63+18±, LEFT 142.0'± EL 99.834
B.M. 36-C SPIKE IN BASE OF 46" & 18" TWIN OAK. STA. 57+70±, RIGHT 139.0'± EL 113.761
ALL FOOTINGS TO BE APPROVED BY THE ENGINEER BEFORE PLACING CONCRETE.
CONCRETE SURFACE FINISH RUBBED INCLUDES; RAILING; TOP FACE & BOTTOM OF FASCIA; EXPOSED FACES OF ABUTMENTS & RETAINING WALLS TO 1' BELOW FINAL GRADE LINE.
ALL REINFORCING BARS SHALL CONFORM TO A.S.T.M. SPECIFICATIONS A 305-49
ALL BARS REQUIRING SPLICING SHALL BE LAPPED AS FOLLOWS UNLESS OTHERWISE NOTED:
VERTICAL BARS AND HORIZONTAL BARS IN BOTTOM OF SLAB NOT LESS THAN 20 DIAMETERS
HORIZONTAL BARS IN TOP OF SLAB WITH MORE THAN 12" OF CONCRETE BELOW THE BARS NOT LESS THAN 35 DIAMETERS

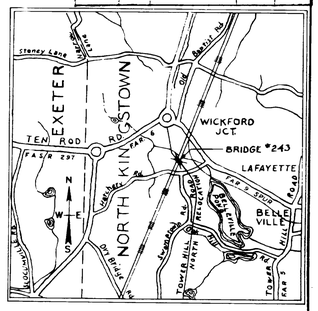

LOCATION MAP

0 1 2
SCALE OF MILES

BRIDGE QUANTITIES

STRUCTURE EXCAVATION - UNCLASSIFIED				2,018	C.Y.
STRUCTURE CONCRETE - CLASS "A" (FOOTINGS)			591.75		C.Y.
" " " (ABUTMENTS, WALLS, APPROACH SLABS)			1,232.02		C.Y.
" " " (DECK, SLAB & SIDEWALK)			168.17		C.Y.
" " " X (BAR RAILING)			33.68		C.Y.
TOTAL STRUCTURE CONCRETE				2025.62	C.Y.
CONCRETE SURFACE FINISH - RUBBED				11,500	S.F.
CONCRETE SURFACE FINISH - GRANOLITHIC SIDEWALK				43	S.Y.
BAR REINFORCEMENT #10	10,812	L.F.	46,523		LBS.
" " #9	9,721	L.F.	33,052		LBS.
" " #8	519	L.F.	1,384		LBS.
" " #7	7587	L.F.	13,208		LBS.
" " #6	48,799	L.F.	76,245		LBS.
TOTAL BAR REINFORCEMENT #6 & LARGER				168,712	LBS.
BAR REINFORCEMENT #5	3583	L.F.	3,737		LBS.
" " #4	14,173	L.F.	10,805		LBS.
TOTAL BAR REINFORCEMENT UNDER #6				14,542	LBS.
STRUCTURAL STEEL - STRINGERS & DIAPHRAGMS				176,770	LBS.
" " SOLE & BEARING PLATES & ANCHORS				3,540	LBS.
" " SHEAR CONNECTORS (SPIRAL WT.)				1,750	LBS.
EXPANSION JOINT FITTINGS (PAVING & SIDEWALK)				7,240	LBS.
GUARD RAIL ANCHOR BOLTS (¾ ϕ x 11'-3")				16	REQ.
DOWELS - ⅞ ϕ W.I. - 4' LONG - GALVANIZED (140 REQ)				14	LBS.
CRAMPS - ⅞ ϕ W.I. - 10" LONG " (160 REQ.)				33	LBS.
RAIL EXPANSION FITTINGS - GALVANIZED				8	REQ.
PIPE - 2" STD. W.I. GALVANIZED				17	L.F.
" 6" C.M. PERFORATED - ASPHALT COATED				420	L.F.
" 6" C.M. ASPHALT COATED				12	L.F.
2" DRAIN & COVER				10	REQ.
JOINT FILLER - 1" P.F. NON-EXTRUDING				135	S.F.
" " ½" P.F. " "				5	S.F.
" " ¼" P.F. " " (CEMENT TONE)				1,750	S.F.
SEALING STRIP (1 x 2)				430	L.F.
GRANITE CURB - VERTICAL - 6 x 11½				124	L.F.
CONCRETE CURB - PRECAST SLOPE FACED				124	L.F.
WATERPROOFING - DECK				600	S.Y.
EARTH FILL SELECTED BORROW - TYPE "A" GRAVEL (BACK OF WALLS & MEDIAN ISLAND)				630	C.Y.
STRUCTURE PAVEMENT - 3"± R.C.C.				323.3	S.Y.
STRUCTURE PAVEMENT - 3"± BITUMINOUS				35	TONS
SIDEWALK - BIT. CONC. CLASS "I" (MEDIAN ISLAND OVER SLAB)				50	S.Y.
BACK FILL				1,020	C.Y.
TILE PLATES (10"x14") NOT INCLUDED IN CONTRACT				4	REQ.
CONCRETE PAVEMENT EXPANSION JOINT - R.I. STD. (EXTRA AT BRIDGE)				96	L.F.

ROADWAY QUANTITIES

UNCLASSIFIED EXCAVATION	285 C.Y.
TRENCH EARTH EXCAVATION - 0-7' DEEP	82 C.Y.
EARTH FILL - COMMON BORROW	19,490 C.Y.
GRAVEL FOUNDATION TYPE "A"	971 C.Y.
FURNISH & PLACE LOAM	307 C.Y.
TRIMMING & FINE GRADING	5350 S.Y.
6" BASE COURSE; CRUSHED STONE OR CRUSHED GRAVEL	225 TONS
3" ASPHALTIC CONC. PAV. CLASS I, TYPE I-1	158 TONS
PIPE 18" CLASS "A" R.C.C.	92 L.F.
PIPE 12" ASPHALT COATED C.M.	42 L.F.
CATCH BASIN TYPE "D" WITH F.& C. #53 & GRANITE STONE INLET	2 REQ.
CONCRETE HEADWALL	1 REQ.
GRANITE CURB 6"x18" VERTICAL STRAIGHT	574 L.F.
" " " " " 2 CORNERS	1 REQ.
CONCRETE CURB, PRECAST TYPE "S" STRAIGHT	374 L.F.
FILLER FOR BASE COURSE — — SAND	92 C.Y.
SIDEWALK - BIT. CONC. CLASS I.	240 S.Y.
METAL GUARD RAIL	350 L.F.
DELINEATORS - SINGLE FACE	4 REQ.
CATCH BASIN "DR" R.I.S.T.D. #66, #37-A, F&C., #29 "S" CONCRETE INLET STONE & CONCRETE INLETE CHUTES	1 REQ.
CEMENT CONCRETE PAVEMENT (REINFORCED)	385 C.Y.
STEEL BAR REINFORCEMENT (UNTREATED)	1,260 LBS.
" " (TREATED, SUPPORTED AND SLEEVED)	650 LBS.
STEEL REINFORCEMENT FABRIC	1,950 S.Y.

LANDSCAPE QUANTITIES

FERTILIZING, SEEDING & ROLLING (MEDIAN ISLAND)	135 S.Y.
" " " " (SLOPES)	2,557 S.Y.
SEED - (PARK MIX "A")	10 LBS.
" (SLOPE MIX "A") 5 LBS PER 1000 SQ FT.	115 LBS.
FERTILIZER (COMM. 8-6-4) 25 LBS PER 1000 SQ FT.	610 LBS.
LIME (AGRICULTURAL) 50 LBS. PER 1000 SQ FT.	1,220 LBS.

DESIGN DATA

SPECIFICATIONS: A.A.S.H.O. 1949 REVISED H20-S16-44 LIVE LOADING

C. W. RIVA CO.
CONSULTING ENGINEERS
PROVIDENCE, R.I.

DEPARTMENT OF PUBLIC WORKS
DIVISION OF HIGHWAYS & BRIDGES

LAFAYETTE R.R. BRIDGE
NORTH KINGSTOWN, R.I.

LOCATION PLAN

DRAWN BY J.A.M. TRACED BY E.A. CHECKED BY J.K.T.

APPROVED [signature] BRIDGE ENGINEER

SHEET NO.

PRINTED

FINAL DATE JAN. 16, 1953

APPROVED [signature] PRINCIPAL HIGHWAY ENGINEER

ISSUED TO

243,002

243.003

FED ROAD DIV NO	STATE	FED AID PROJ NO	FISCAL YEAR	SHEET NO	TOTAL SHEETS
1	R I	F-05(1)	POST WAR	30 C	196

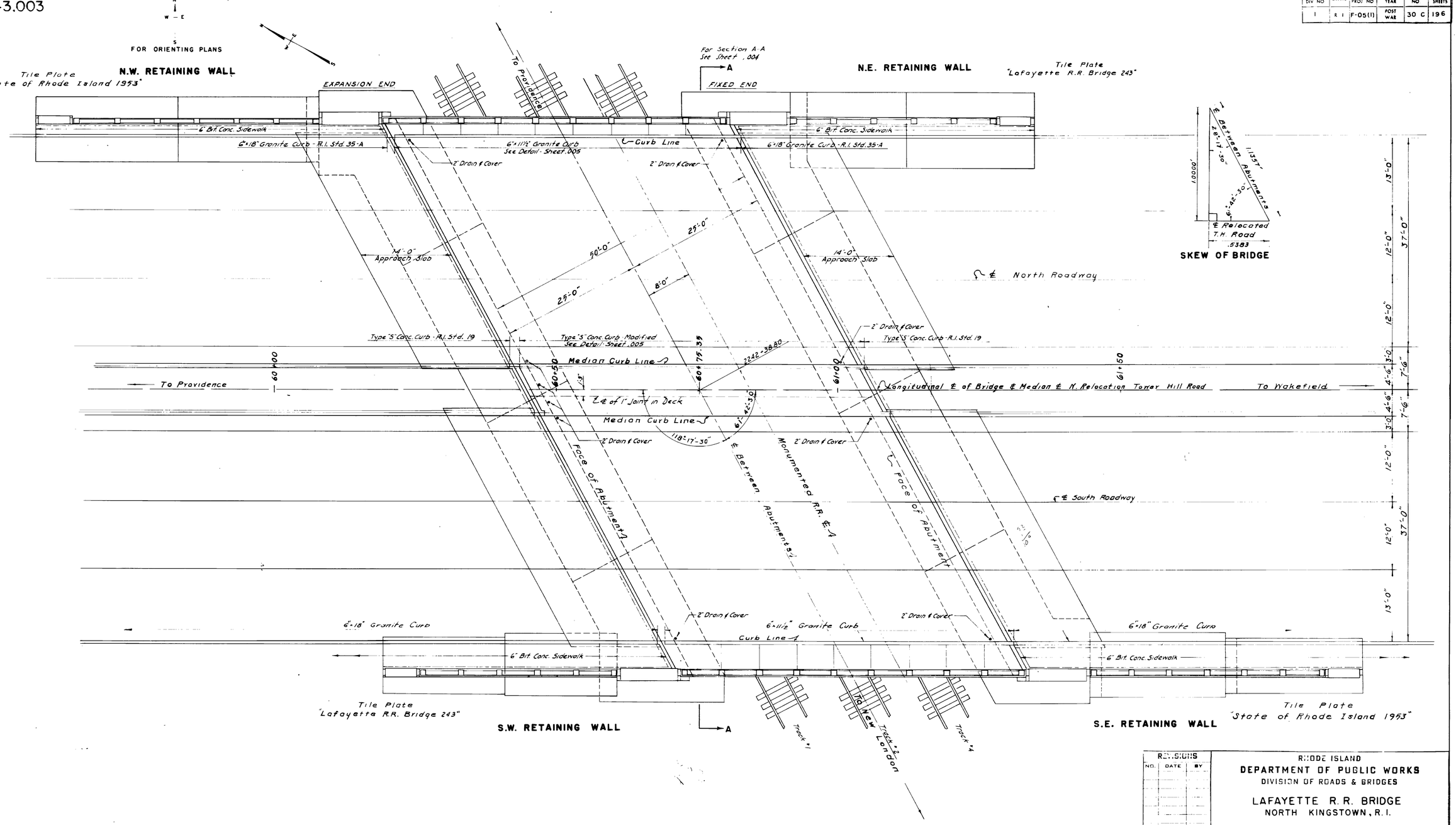

GENERAL PLAN
SCALE: 1/8" = 1'-0"

C. W. RIVA CO.
CONSULTING ENGINEERS
PROVIDENCE, RHODE ISLAND

REVISIONS		
NO.	DATE	BY

RHODE ISLAND
DEPARTMENT OF PUBLIC WORKS
DIVISION OF ROADS & BRIDGES

LAFAYETTE R. R. BRIDGE
NORTH KINGSTOWN, R. I.

GENERAL PLAN

DRAWN BY J. A. M. TRACED BY R. P. S. CHECKED BY J. K. T.

APPROVED Daniel O. Bagnall BRIDGE ENGINEER

SET NO.
PRINTED
ISSUED TO

FINAL DATE JAN. 16, 1953

APPROVED C. H. Sanderson PRINCIPAL HIGHWAY ENGINEER

243,003

243,004

STATE DIV. NO	STATE	FED. AID PROJ. NO	FISCAL YEAR	SHEET NO	TOTAL SHEETS
1	R.I.	F-05(1)	POST WAR	30 D	196

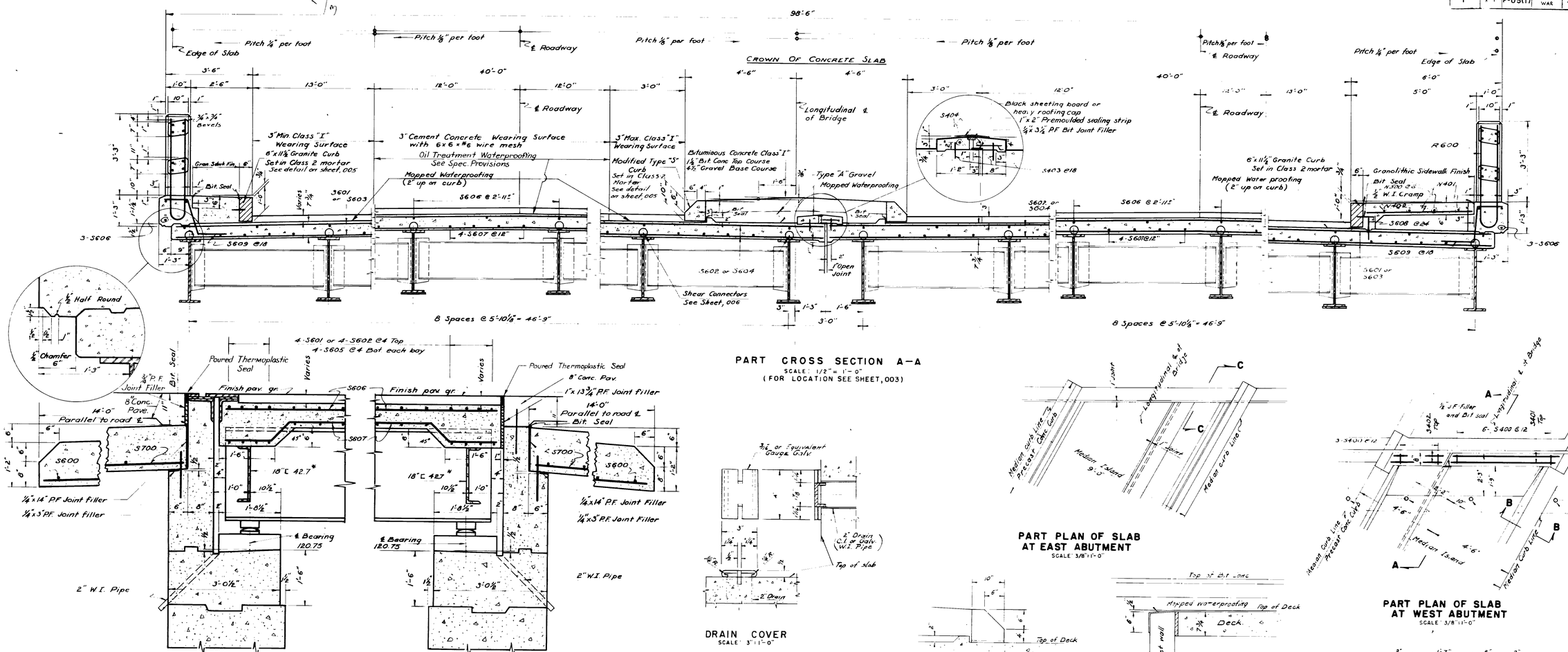

PART CROSS SECTION A-A
SCALE: 1/2" = 1'-0"
(FOR LOCATION SEE SHEET, 003)

DETAIL OF DECK AT WEST ABUTMENT
SCALE: 3/4" = 1'-0"

DETAIL OF DECK AT EAST ABUTMENT
SCALE: 3/4" = 1'-0"

DRAIN COVER
SCALE: 3" = 1'-0"

PART PLAN OF SLAB AT EAST ABUTMENT
SCALE: 3/8" = 1'-0"

PART PLAN OF SLAB AT WEST ABUTMENT
SCALE: 3/8" = 1'-0"

SECTION B-B
SCALE: 3/4" = 1'-0"

SECTION C-C
SCALE: 3/4" = 1'-0"

SECTION A-A
SCALE: 3/4" = 1'-0"

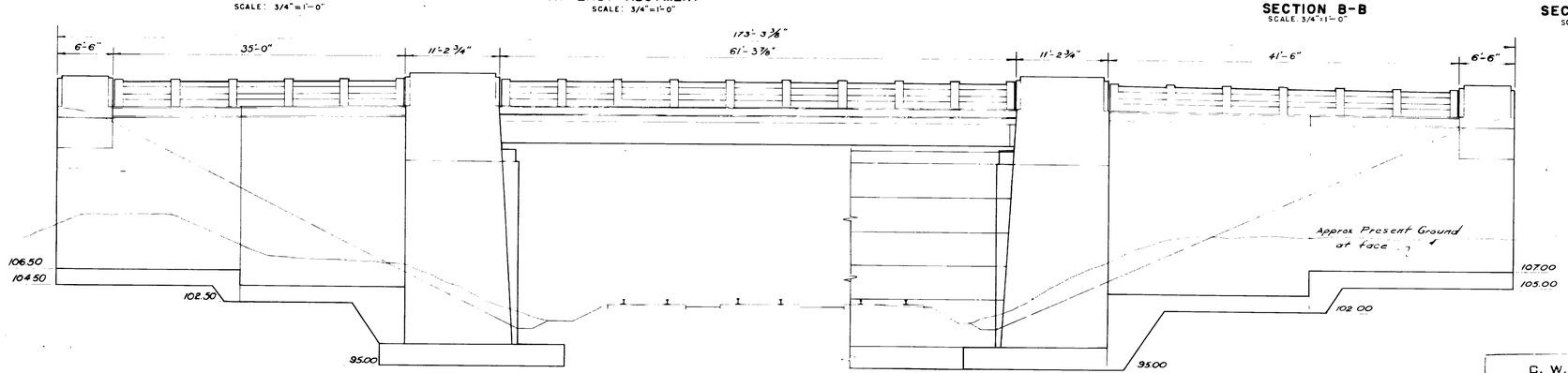

SOUTH ELEVATION
SCALE: 1/8" = 1'-0"

C. W. RIVA CO.
CONSULTING ENGINEERS
PROVIDENCE, RHODE ISLAND

REVISIONS		
NO.	DATE	BY

RHODE ISLAND
DEPARTMENT OF PUBLIC WORKS
DIVISION OF ROADS & BRIDGES

LAFAYETTE R.R. BRIDGE
NORTH KINGSTOWN, R.I.

ELEVATION & SECTIONS

DRAWN BY R.C.C. TRACED BY [illegible] CHECKED BY J.K.T.

APPROVED [signature] BRIDGE ENGINEER

SET NO.

PRINTED

FINAL DATE JAN. 16, 1953

APPROVED [signature] PRINCIPAL HIGHWAY ENGINEER

ISSUED TO

243,004

243,005

FED ROAD DIV. NO	STATE	FED AID PROJ. NO.	FISCAL YEAR	SHEET NO.	TOTAL SHEETS
1	R. I.	F-05(1)	POST WAR	30 E	196

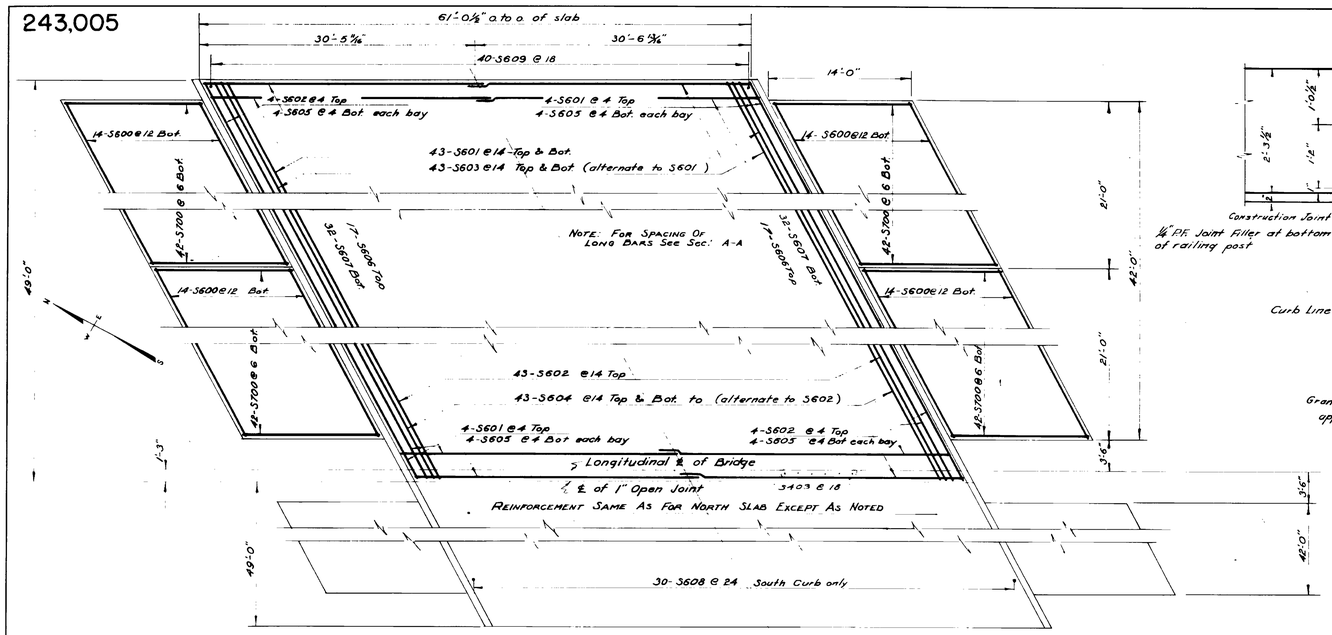

PLAN OF SLAB REINFORCEMENT
SCALE: 1/8"=1'-0"

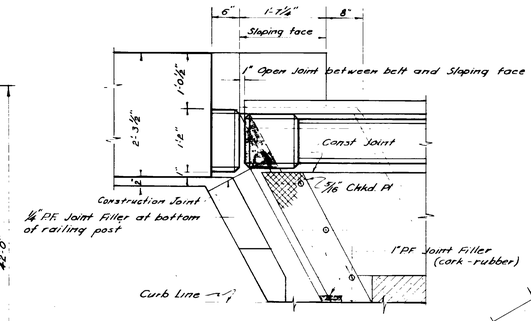

PLAN

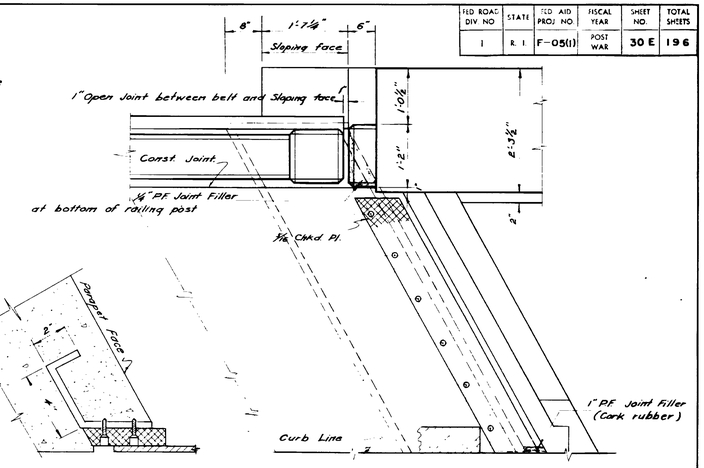

PLAN

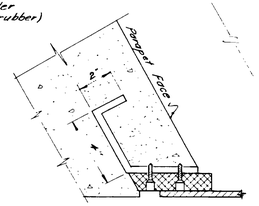

SECTION B-B
SCALE: 3/4"=1'-0"

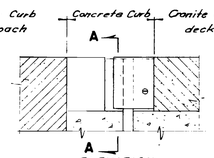

ELEVATION
DETAIL AT N.W. CURB
SCALE: 3/4"=1'-0"

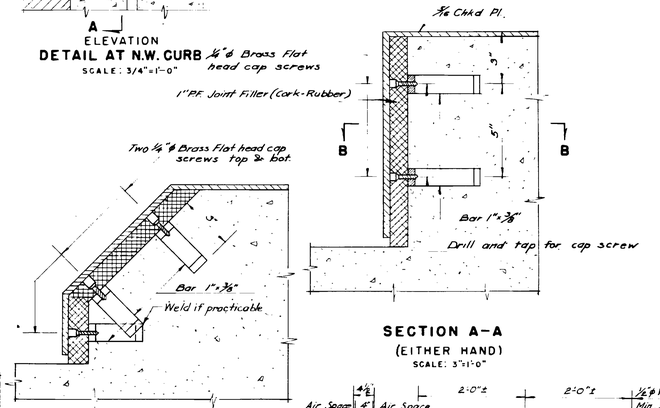

SECTION A-A
(EITHER HAND)
SCALE: 3"=1'-0"

SECTION C-C
SCALE: 3"=1'-0"

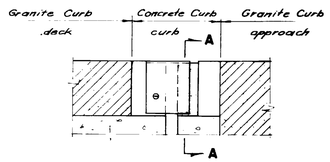

ELEVATION
DETAIL AT S.W. CURB
SCALE: 3/4"=1'-0"

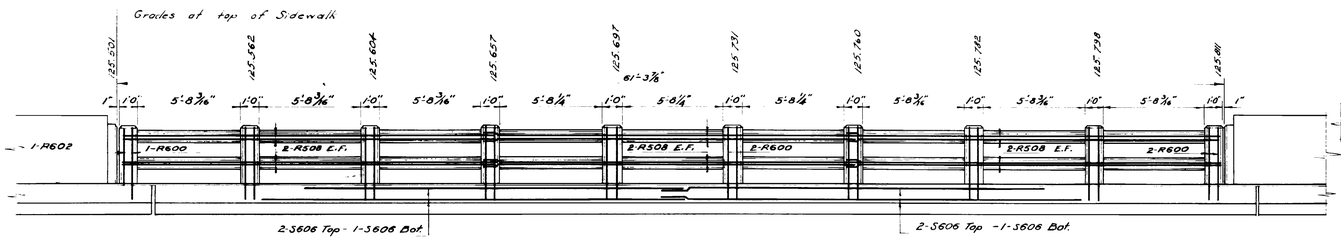

SECTIONAL ELEVATION AT NORTH CURB
SCALE: 1/4"=1'-0"

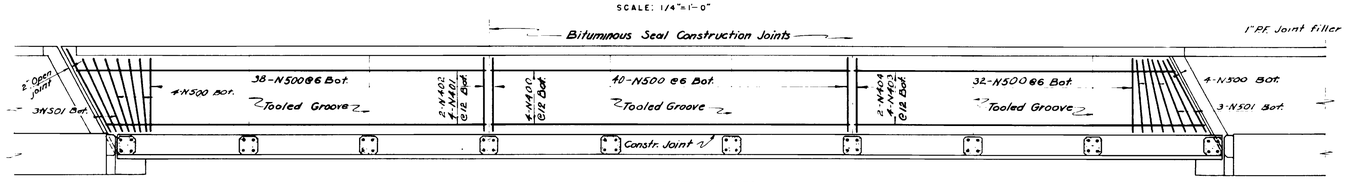

PLAN OF SOUTH SIDEWALK
SCALE: 1/4"=1'-0"

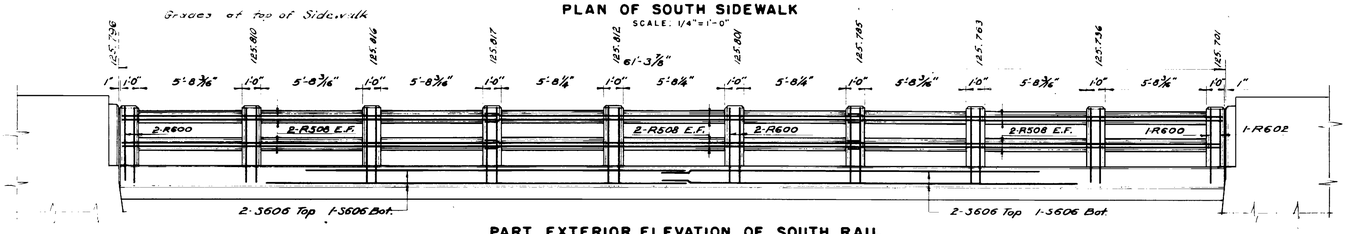

PART EXTERIOR ELEVATION OF SOUTH RAIL
SCALE: 1/4"=1'-0"

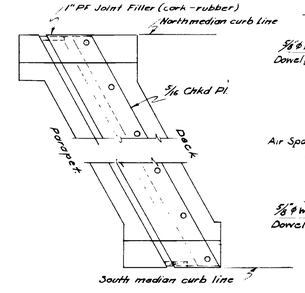

PART PLAN

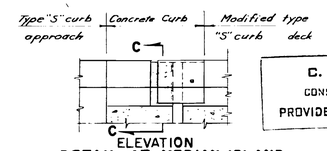

ELEVATION
DETAIL AT MEDIAN ISLAND & WEST ABUTMENT
SCALE: 3/4"=1'-0"

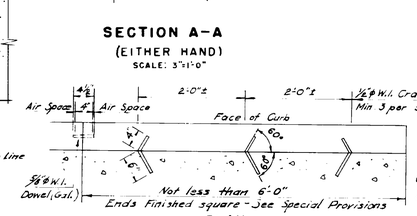

PLAN

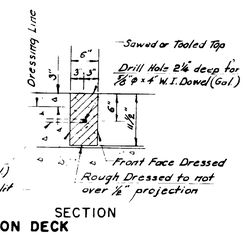

SECTION

DETAIL OF GRANITE CURB ON DECK

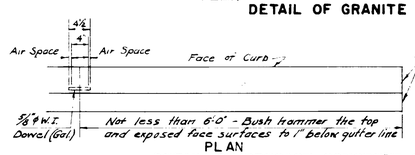

PLAN

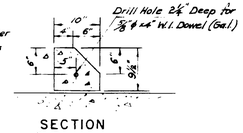

SECTION

DETAIL OF PRECAST CONCRETE CURB TYPE "S" MODIFIED
SCALE: 3/4"=1'-0"

REVISIONS		
NO.	DATE	BY

C. W. RIVA CO.
CONSULTING ENGINEERS
PROVIDENCE, RHODE ISLAND

RHODE ISLAND
DEPARTMENT OF PUBLIC WORKS
DIVISION OF ROADS & BRIDGES

LAFAYETTE R.R. BRIDGE
NORTH KINGSTOWN, R. I.

DECK

DRAWN BY P.C.C. TRACED BY E.S.F. CHECKED BY J.K.T.

APPROVED Daniel A. Lavoie BRIDGE ENGINEER

SET NO.

PRINTED

FINAL DATE JAN 16, 1953

APPROVED G. K. Sundquist PRINCIPAL HIGHWAY ENGINEER

ISSUED TO

243,005

243,006

FED ROAD DIV NO	STATE	FED AID PROJ NO	FISCAL YEAR	SHEET NO	TOTAL SHEETS
1	R. I.	F-05(11)	POST WAR	30-F	196

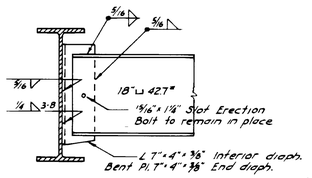

DIAPHRAGM CONNECTIONS
SCALE: 3/4" = 1'-0"

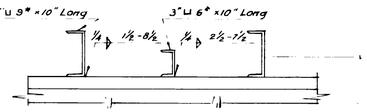

PART ELEVATION
SCALE: 1 1/2" = 1'-0"

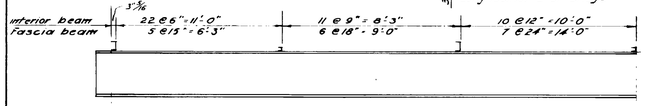

CHANNEL SHEAR CONNECTORS
SCALE: 1/4" = 1'-0"

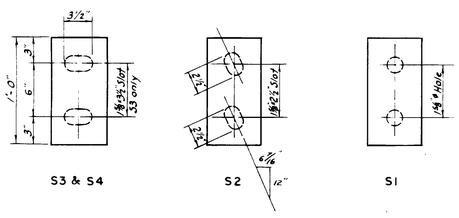

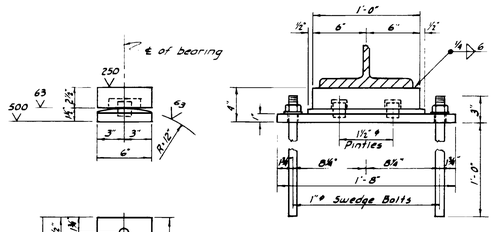

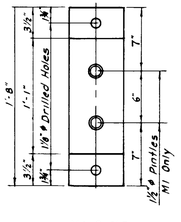

M1 & M2
SCALE: 1 1/2" = 1'-0"

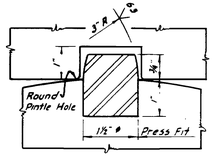

DETAIL OF PINTLE
SCALE: 6" = 1'-0"

BEARINGS

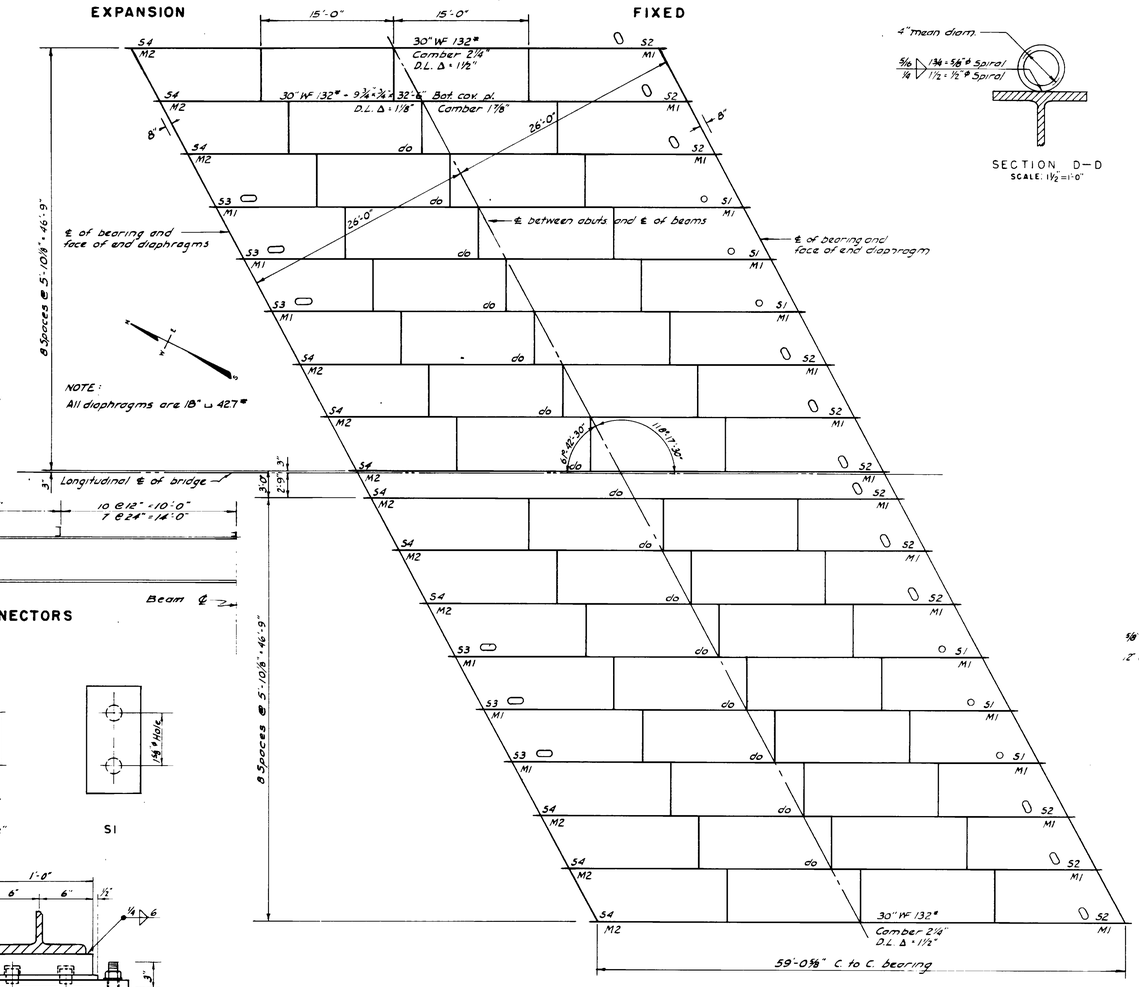

FRAMING PLAN
SCALE: 1/8" = 1'-0"

SECTION D–D
SCALE: 1 1/2" = 1'-0"

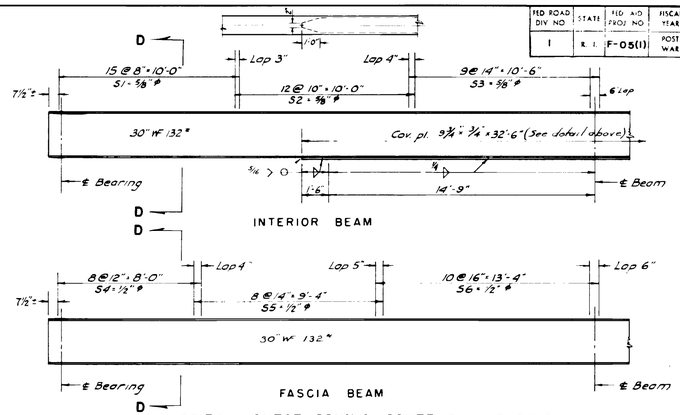

SPIRAL SHEAR CONN. & COVER PL. WELDING
SCALE: 1/4" = 1'-0"

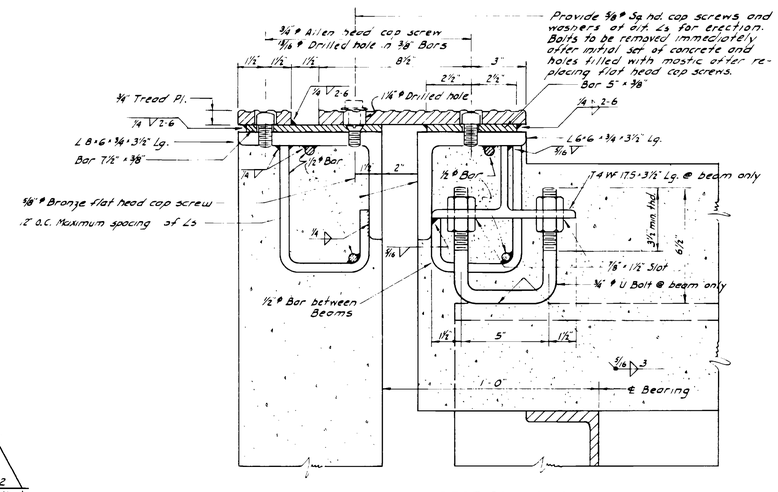

SECTION A–A
SCALE 3" = 1'-0"

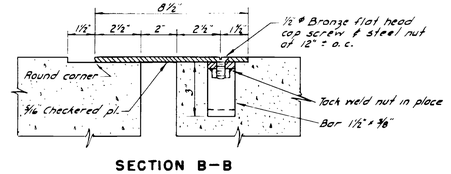

SECTION B–B
SCALE 3" = 1'-0"

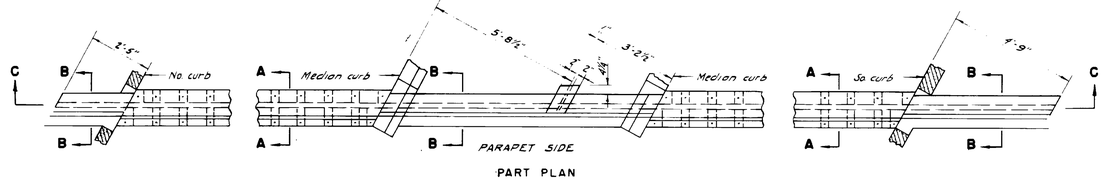

PART PLAN
SCALE: 3/8" = 1'-0"

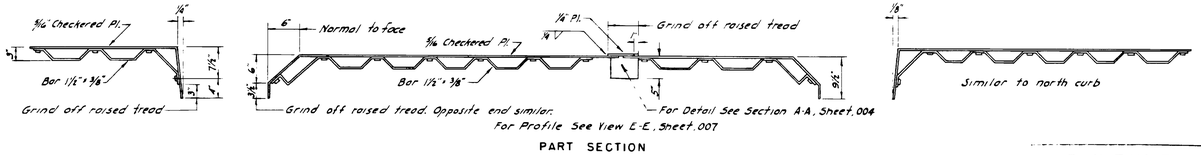

PART SECTION
EXPANSION PLATES
SCALE 3/4" = 1'-0"

REVISIONS		
NO.	DATE	BY

RHODE ISLAND
DEPARTMENT OF PUBLIC WORKS
DIVISION OF ROADS & BRIDGES

LAFAYETTE R.R. BRIDGE
NORTH KINGSTOWN, R. I.

STRUCTURAL STEEL

DRAWN BY J.K.T. TRACED BY W.B.M. CHECKED BY J.G.

APPROVED Daniel O. Cargill BRIDGE ENGINEER — SET NO. — PRINTED

FINAL DATE JAN 16, 1953

APPROVED PRINCIPAL HIGHWAY ENGINEER — ISSUED TO

C. W. RIVA CO.
CONSULTING ENGINEERS
PROVIDENCE, RHODE ISLAND

243,006

243,007

RI ROAD DIV NO	STATE	ROUTE NO.			SHEET NO.	TOTAL SHEETS
1	R I	F-05(1)			30 G	196

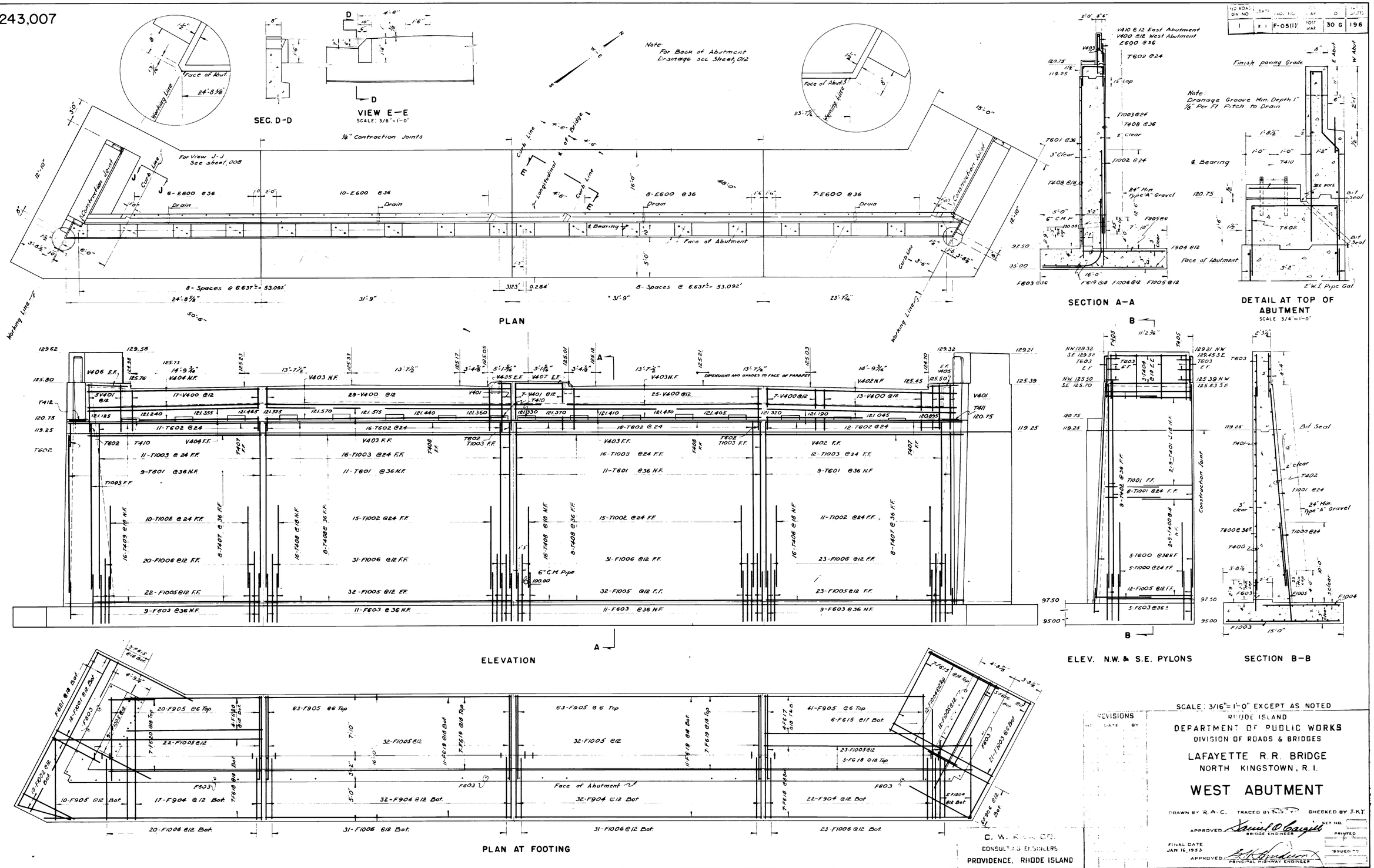

SCALE: 3/16"=1'-0" EXCEPT AS NOTED

REVISIONS

NO.	DATE	BY

RHODE ISLAND
DEPARTMENT OF PUBLIC WORKS
DIVISION OF ROADS & BRIDGES

LAFAYETTE R.R. BRIDGE
NORTH KINGSTOWN, R.I.

WEST ABUTMENT

DRAWN BY R.A.C. TRACED BY R.S.T. CHECKED BY J.K.T.

APPROVED David O. Cargill BRIDGE ENGINEER

SET NO.

PRINTED

ISSUED TO

FINAL DATE JAN 16, 1933

APPROVED PRINCIPAL HIGHWAY ENGINEER

C. W. [illegible] CO.
CONSULTING ENGINEERS
PROVIDENCE, RHODE ISLAND

243.007

243,008

FED ROAD DIV. NO.	STATE	FED. AID PROJ. NO.	FISCAL YEAR	SHEET NO.	TOTAL SHEETS
1	R.I.	F-05(1)	1952 1953	30 H	196

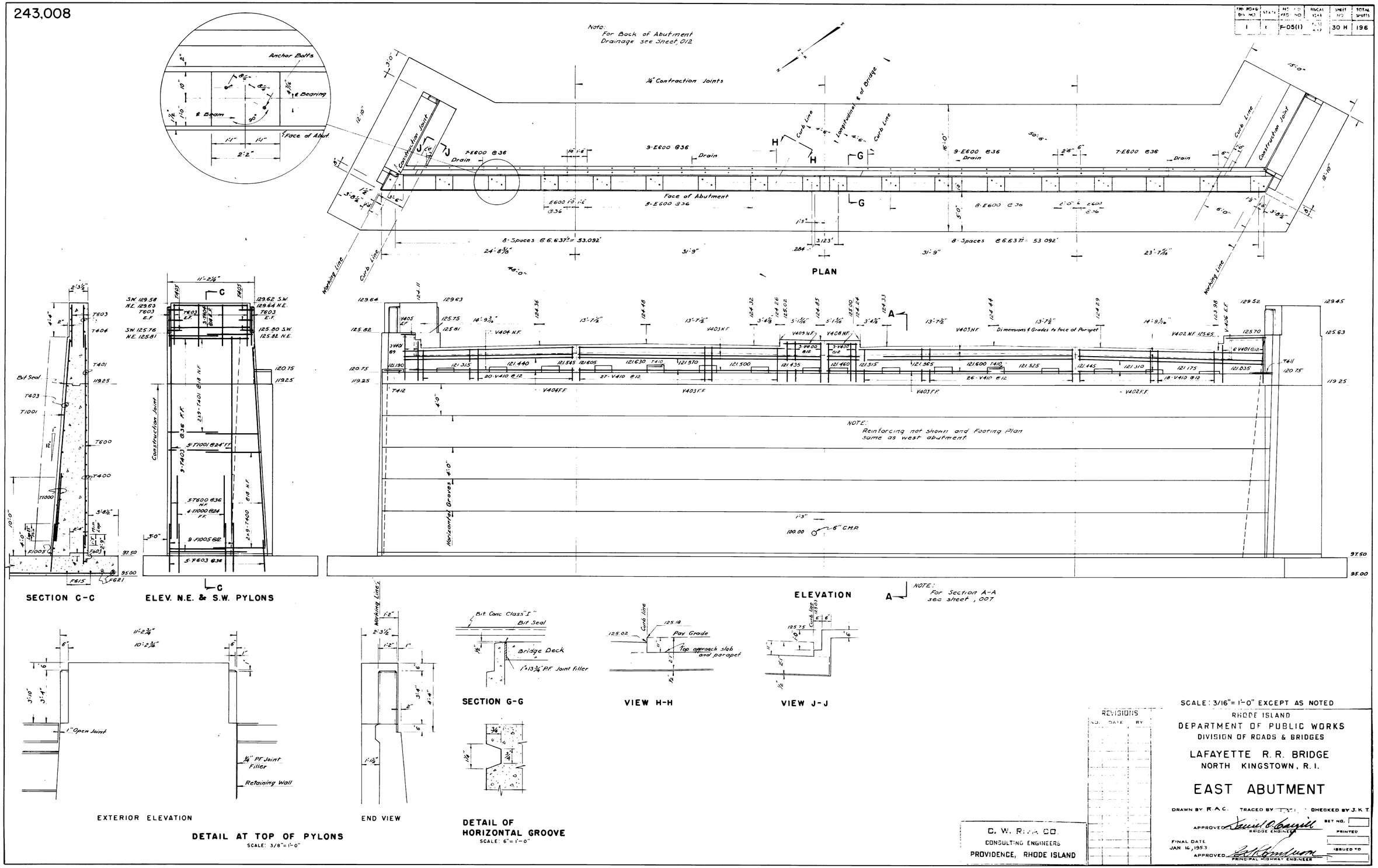

SCALE: 3/16" = 1'-0" EXCEPT AS NOTED

REVISIONS

NO.	DATE	BY

RHODE ISLAND
DEPARTMENT OF PUBLIC WORKS
DIVISION OF ROADS & BRIDGES

LAFAYETTE R.R. BRIDGE
NORTH KINGSTOWN, R.I.

EAST ABUTMENT

DRAWN BY R.A.C. TRACED BY [illegible] CHECKED BY J.K.T.

APPROVED [illegible] BRIDGE ENGINEER

SET NO.
PRINTED
ISSUED TO

FINAL DATE JAN 16, 1953

APPROVED [illegible] PRINCIPAL HIGHWAY ENGINEER

C. W. RIZZA CO.
CONSULTING ENGINEERS
PROVIDENCE, RHODE ISLAND

243,008

243.009

FED. ROAD DIV. NO.	STATE	FED. AID PROJ. NO.	FISCAL YEAR	SHEET NO.	TOTAL SHEETS
1	R.I.	F-05(1)	POST WAR	30 I	196

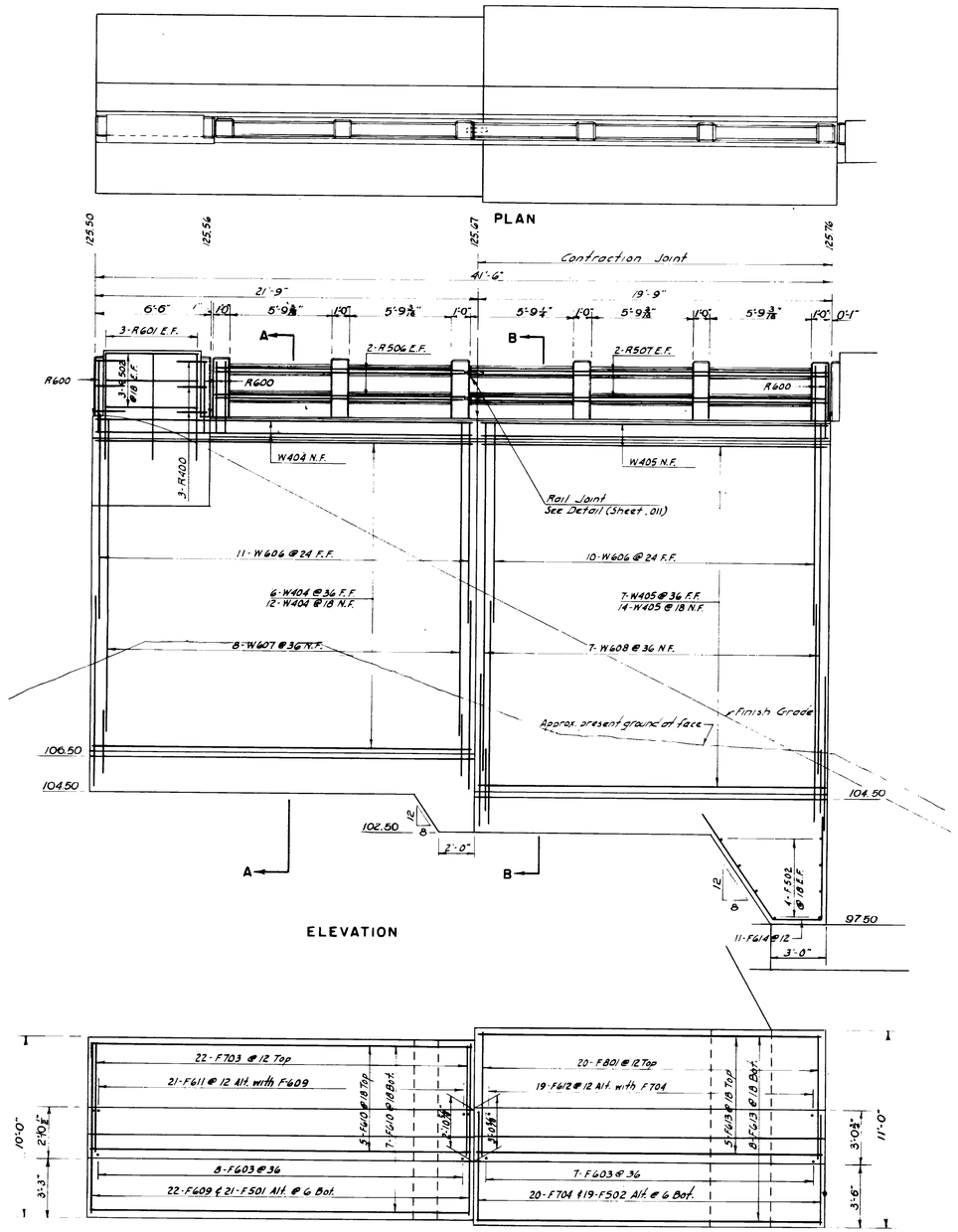

Note:
For Back of Wall Drainage
See Sheet 012

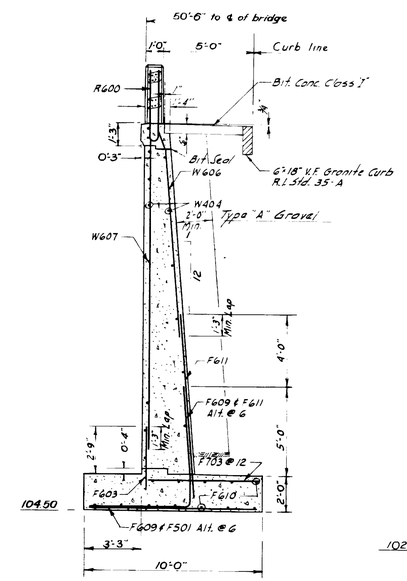

SECTION A-A

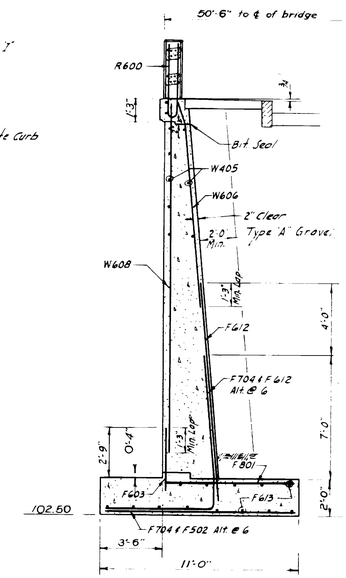

SECTION B-B

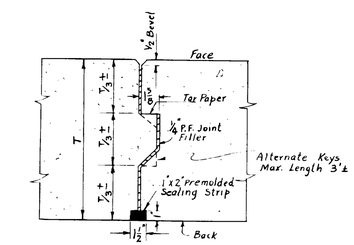

DETAIL OF VERTICAL JOINTS IN WALLS & ABUTMENTS
SCALE: 1 1/2" = 1'-0"

SCALE: 1/4" = 1'-0" EXCEPT AS NOTED

REVISIONS

NO.	DATE	BY

C. W. RIVA CO.
CONSULTING ENGINEERS
PROVIDENCE, RHODE ISLAND

RHODE ISLAND
DEPARTMENT OF PUBLIC WORKS
DIVISION OF ROADS & BRIDGES

LAFAYETTE R.R. BRIDGE
NORTH KINGSTOWN, R.I.

SOUTH WEST RETAINING WALL

DRAWN BY J.K.T. TRACED BY W.B.M. CHECKED BY R.A.C.

APPROVED Samuel O. Lanzillo BRIDGE ENGINEER

SET NO.
PRINTED
ISSUED TO

FINAL DATE JAN. 16, 1963
APPROVED R. A. Shudnow PRINCIPAL HIGHWAY ENGINEER

243.009

243,010

FED ROAD DIV. NO	STATE	FED AID PROJ NO	FISCAL YEAR	SHEET NO	TOTAL SHEETS
1	R.I.	F-05(11)	POST WAR	30 J	196

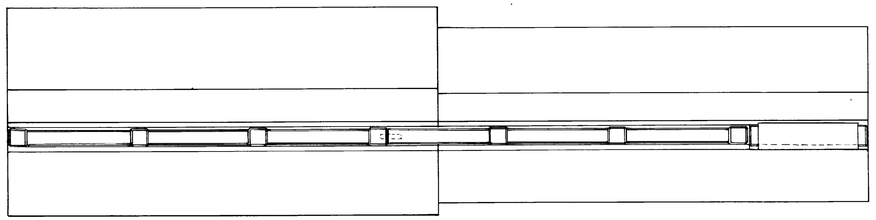

PLAN

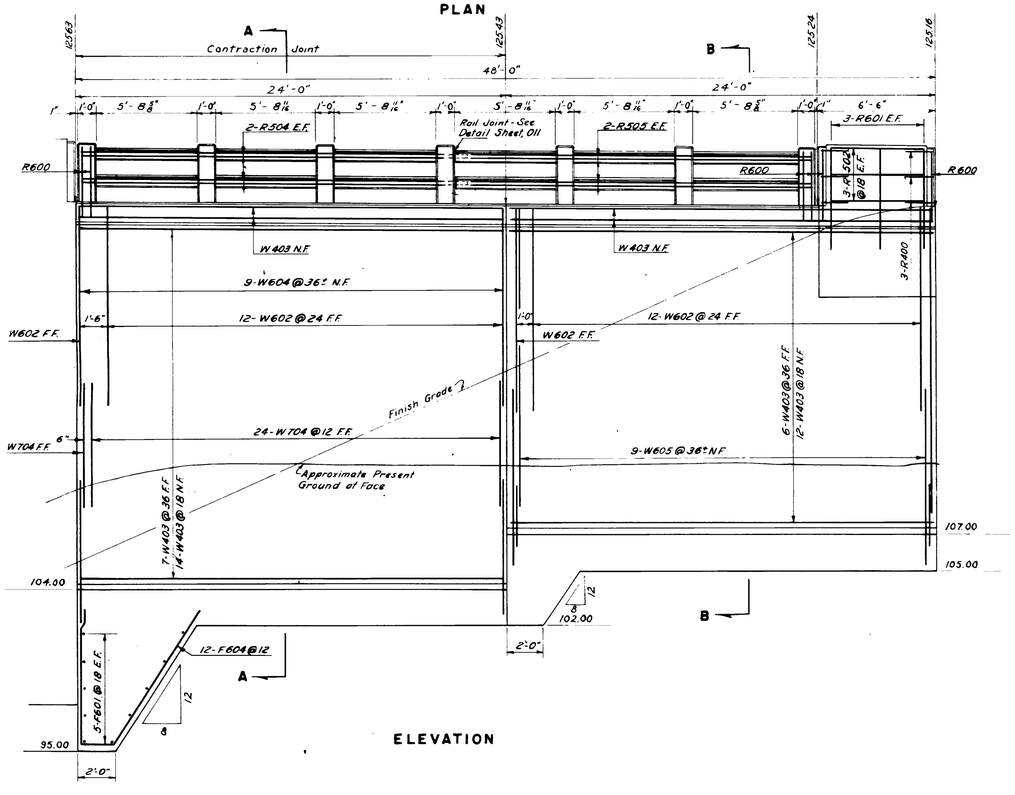

ELEVATION

Note
For Back of Wall Drainage see Sheet, 012

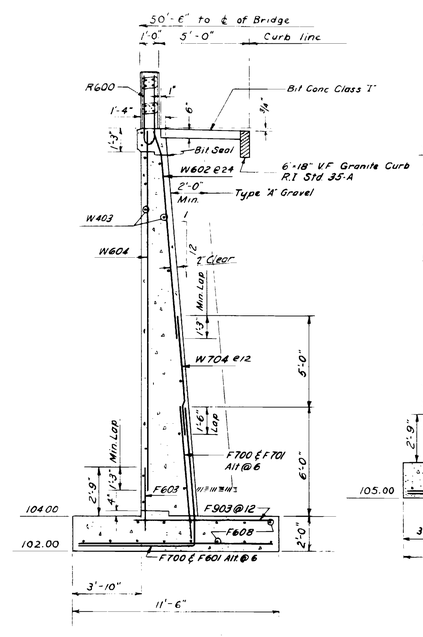

SECTION A—A

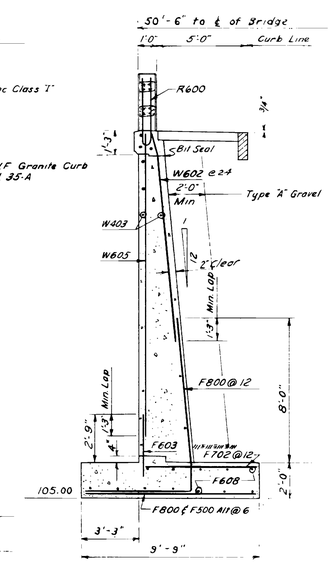

SECTION B-B

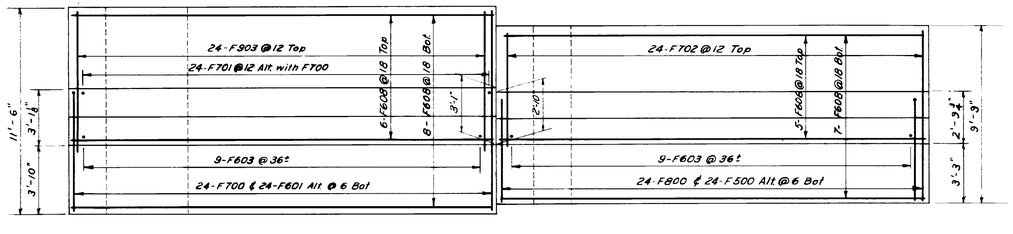

PLAN AT FOOTING

C. W. RIVA CO.
CONSULTING ENGINEERS
PROVIDENCE, RHODE ISLAND

SCALE: 1/4" = 1'-0" EXCEPT AS NOTED

REVISIONS		
NO.	DATE	BY

RHODE ISLAND
DEPARTMENT OF PUBLIC WORKS
DIVISION OF ROADS & BRIDGES

LAFAYETTE R. R. BRIDGE
NORTH KINGSTOWN, R. I.

SOUTH EAST RETAINING WALL

DRAWN BY J.K.T. TRACED BY E.A. CHECKED BY R.A.C.

APPROVED Samuel A. Carpiti BRIDGE ENGINEER

SET NO.
PRINTED
ISSUED

FINAL DATE JAN 16, 1953

APPROVED B. H. Hendrow PRINCIPAL HIGHWAY ENGINEER

243,010

243,011

FED. ROAD DIV. NO.	STATE	FED. AID PROJ. NO.	FISCAL YEAR	SHEET NO.	TOTAL SHEETS
1	R	F-05(1)	30 K	196	

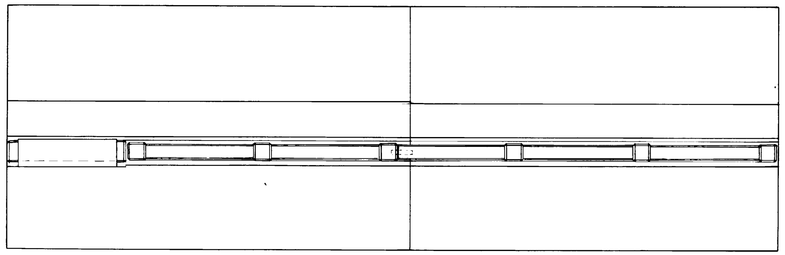

PLAN

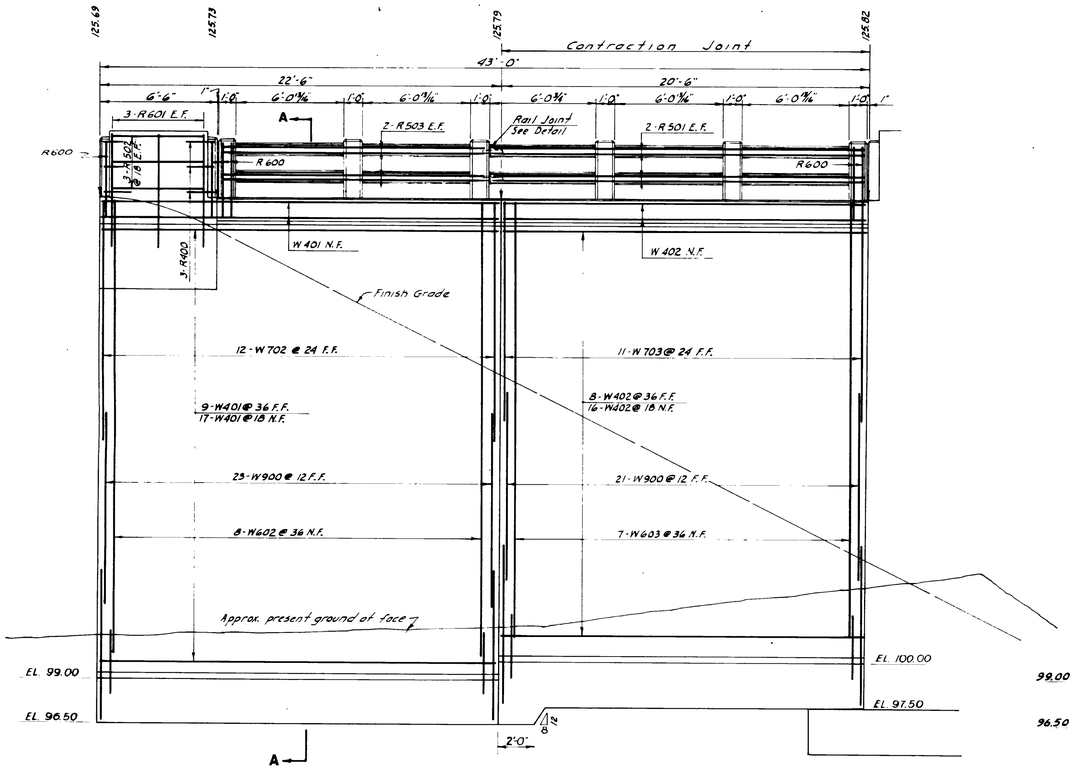

ELEVATION

Note:
For Back of Wall Drainage
see Sheet, 012

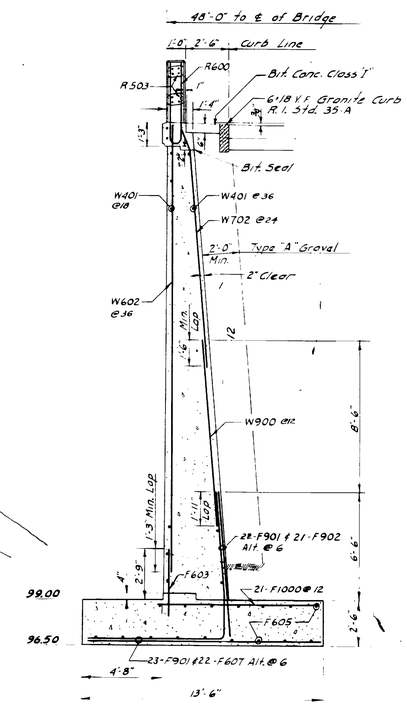

SECTION A-A

3½" W.I. Pipe 4½" long threaded into Greenhouse Post Flange. Bolt to post forms when erecting. Interior end to be capped

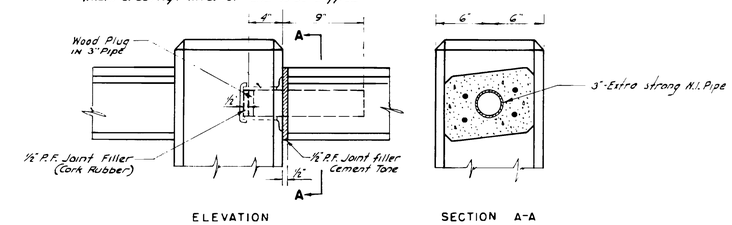

ELEVATION SECTION A-A

DETAIL OF RAIL EXPANSION JOINT

SCALE 1 1/2"=1'-0

Note
All material to be galvanized

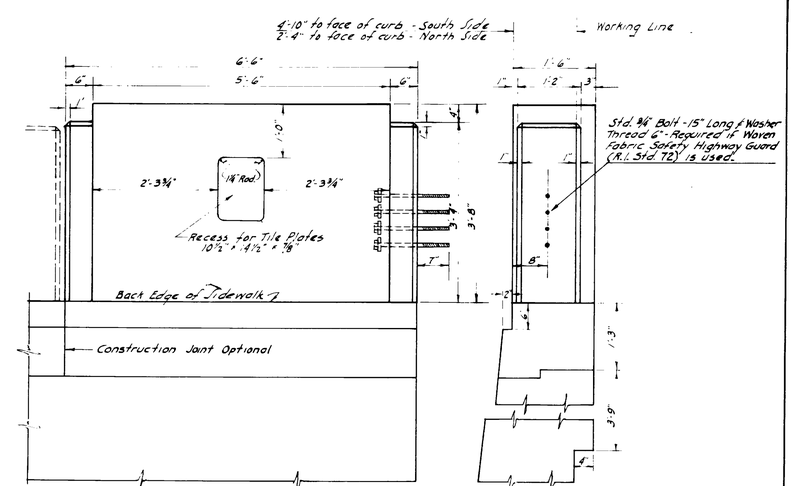

INTERIOR ELEVATION END VIEW

DETAIL OF END POST

SCALE: 3/4"= 1'-0"

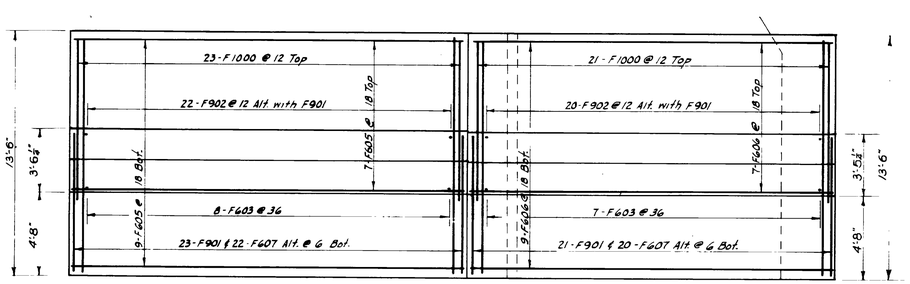

PLAN AT FOOTING

SCALE: 1/4"= 1'-0" EXCEPT AS NOTED

REVISIONS		
NO.	DATE	BY

C. W. RIVA CO.
CONSULTING ENGINEERS
PROVIDENCE, RHODE ISLAND

RHODE ISLAND
DEPARTMENT OF PUBLIC WORKS
DIVISION OF ROADS & BRIDGES

LAFAYETTE R. R. BRIDGE
NORTH KINGSTOWN, R. I.

NORTH EAST RETAINING WALL

DRAWN BY J.K.T. TRACED BY W.B.M. CHECKED BY R.A.C.

APPROVED Daniel A. Cargill
BRIDGE ENGINEER

FINAL DATE JAN. 16, 1953

APPROVED
PRINCIPAL HIGHWAY ENGINEER

SHT. NO.
PRINTED
ISSUED TO

243,011

243,012

FED ROAD DIV NO	STATE	FED AID PROJ NO	FISCAL YEAR	SHEET NO	TOTAL SHEETS
1	R I	F-05(1)	1953	30 L	196

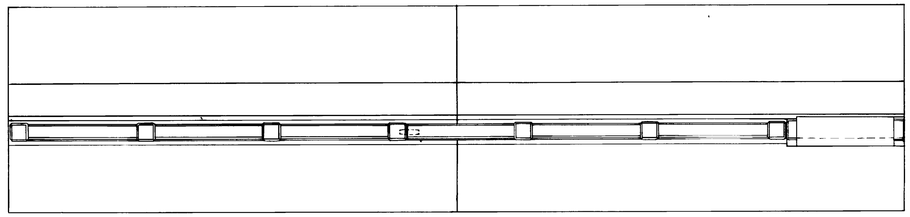

PLAN

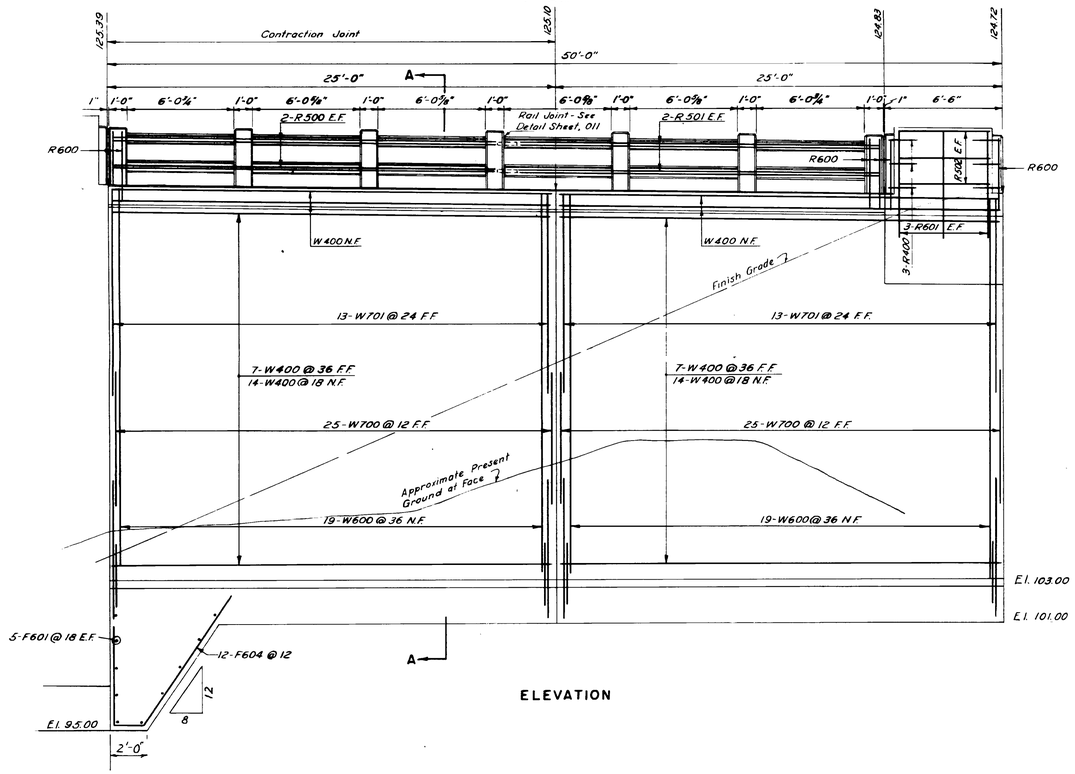

ELEVATION

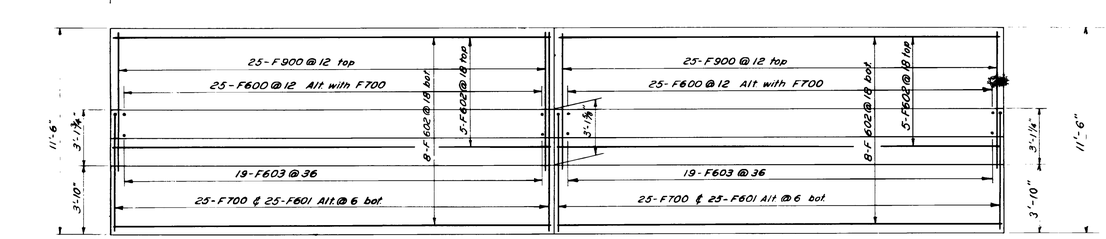

PLAN AT FOOTING

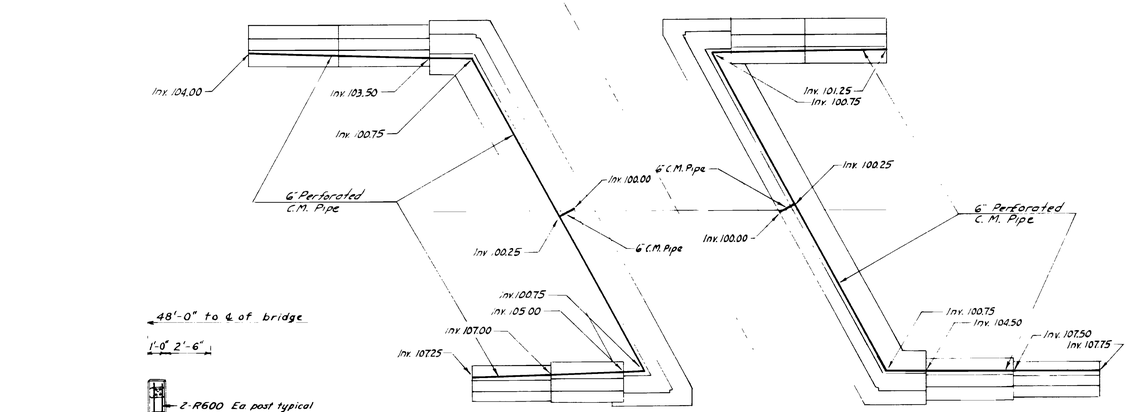

PLAN
SCALE 1" = 20'

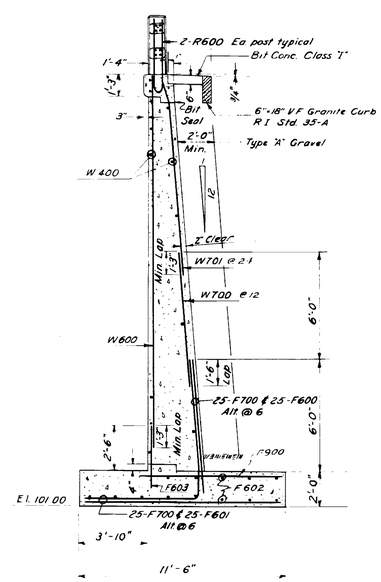

SECTION A–A

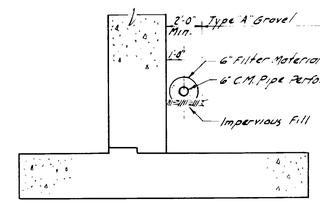

TYPICAL SECTION
SCALE: 1/4" = 1'-0"

ABUTMENT & RETAINING WALL DRAINAGE

SCALE: 1/4" = 1'-0" EXCEPT AS NOTED

REVISIONS		
NO	DATE	BY

RHODE ISLAND
DEPARTMENT OF PUBLIC WORKS
DIVISION OF ROADS & BRIDGES

LAFAYETTE R.R. BRIDGE
NORTH KINGSTOWN, R.I.

NORTH WEST RETAINING WALL

DRAWN BY J.K.T. TRACED BY E.A. CHECKED BY R.A.C.

APPROVED BRIDGE ENGINEER

SET NO.
PRINTED
ISSUED TO

FINAL DATE JAN 16, 1953

APPROVED PRINCIPAL HIGHWAY ENGINEER

C. W. RIVA CO.
CONSULTING ENGINEERS
PROVIDENCE, RHODE ISLAND

243,012

FED. ROAD DIV. NO.	STATE	PROJ. NO.	FED. AID PROJ. NO.	SHEET NO.	TOTAL SHEETS
1	R.I.	F-05(1)	U.S.F. WAR	30 M	196

243,013

BENT BARS

NO	SIZE	LENGTH	MK	TYPE	B	C	D	H	LOCATION
210	*10	15'-5"	F1006	11	6'-6"	3'-6"	5'-5"		Abutment Footing
44	*9	16'-5"	F901	12	7'-8"	2'-3"	6'-6"	0'-7"	Wall Footing
24	*8	15'-4"	F800	12	5'-7"	1'-9"	8'-0"	0'-8"	Wall Footing
74	*7	14'-3"	F700	12	6'-6"	1'-9"	6'-0"	0'-6"	Wall Footing
20		14'-11	F704	12	6'-2"	1'-9"	7'-0"	0'-7"	" "
26		11'-7	W701	19	1'-5"	10'-2"		0'-6"	Wall Stem
12		13'-3"	W702	19	1'-5"	11'-10"		0'-6"	" "
11		12'-3"	W703	19	1'-5"	10'-10"		0'-6"	" "
24	*6	18'-0"	F604	12	7'-6"	1'-6"	9'-0"	7'-6"	Wall Footing
22		12'-7"	F609	12	5'-10"	1'-9"	5'-0"	0'-5"	" "
11		15'-9"	F614	12	6'-0"	2'-6"	7'-3"	6'-0"	
98		8'-3"	R600	S11				4'-1	Railing
2		6'-6"	R602	17	2'-11"	0'-8"	2'-11"		"
128		31'-4"	S607	3	29'-2	0'-11"	1'-3"	0'-8"	Deck Slab
80		3'-4"	S609	3	0'-10"	1'-6"	1'-0"	0'-3"	" "
118		8'-2"	T602	17	2'-9"	2'-8"	2'-9"		Abutment
26		11'-7"	W602	19	1'-5"	10'-2"		0'-6"	Wall Stem
21		11'-1"	W606	19	1'-5"	9'-8"		0'-6"	" "
24	*4	4'-2"	R400	17	1'-8"	0'-10"	1'-8"		End Post
9		2'-9"	S400	17	1'-2"	0'-5"	1'-2"		Deck Slab
72		8'-5"	T400	17	1'-9"	6'-8"			Abutment
72		8'-0"	T401	17	1'-9"	6'-3"			"
24		4'-2"	T405	17	1'-8"	0'-10"	1'-8"		"
32		27'-5"	T406	19	4'-2"	23'-3"		3'-8"	"
32		28'-2"	T409	13	4'-2"		24'-0"	2'-0"	Abutment Stool
32		7'-8"	T410	T2					" "
2		7'-9"	T411	22					" "
2		8'-3"	T412	22					" "
101		10'-10"	V400	23					Abutment Parapet
26		11'-8"	V401	23					" "
91		9'-0"	V410	23					" "

STRAIGHT BARS

NO	SIZE	LENGTH	MK	LOCATION
44	*10	9'-0"	F1000	Wall Footing
24		13'-6"	F1001	Abutment Footing
20		6'-6"	F1002	" "
42		14'-6"	F1003	" "
34		10'-0"	F1004	" "
261		6'-3"	F1005	" " +
18		8'-2"	T1000	Abutment
24		25'-9"	T1001	"
102		10'-8"	T1002	"
116		19'-9"	T1003	"
51	*9	7'-4"	F900	Wall Footing +
42		8'-5"	F902	" "
24		7'-8"	F903	" "
206		15'-6"	F904	Abutment Footing
394		11'-0	F905	" "
12		8'-6"	F906	" "
44		10'-5"	W900	Wall Stem
21	*8	7'-2"	F801	Wall Footing +
24	*7	7'-6"	F701	Wall Footing
25		6'-1"	F702	" " +
22		6'-4"	F703	" "
336		13'-6"	S700	Approach Slab
50		7'-6"	W700	Wall Stem
25		6'-6"	W704	" "
63		1'-6"	E600	Abutment
51	*6	7'-9"	F600	Wall Footing +
34		11'-0"	F601	" "
26		24'-6"	F602	" "
186		3'-8"	F603	Wall & Abutment Footing
16		22'-0"	F605	Wall Footing
16		20'-0"	F606	" "
42		13'-0"	F607	" "
26		23'-6"	F608	" "
12		21'-3"	F610	" "
21		10'-3"	F611	" "
19		12'-3"	F612	" "
13		19'-3"	F613	" "
32		11'-3"	F615	" "
10		16'-3"	F616	" "
16		20'-3"	F617	" "
34		26'-0"	F618	" "
72		31'-3"	F619	" "
22		19'-6"	F620	" "
4		21'-6"	F621	" "
25		5'-9"	R601	End Post +
132		23'-6"	S600	Approach Slab
188		26'-0"	S601	Deck Slab
188		30'-6"	S602	" "
172		29'-4"	S603	" "
172		27'-2"	S604	" "
128		6'-2"	S605	" "
80		31'-0"	S606	" "
31		1'-0"	S608	" "
20		26'-8"	T600	Abutment
80		20'-0"	T601	"
48		5'-8"	T603	"
38		21'-0"	W600	Wall Stem
8		25'-3"	W601	" "
7		24'-3"	W603	" "
9		19'-10"	W604	" "
9		16'-8"	W605	" "
8		17'-4"	W607	" "
7		19'-6"	W608	" "
24	*5	9'-3"	F500	Wall Footing
21		9'-6"	F501	" "
27		10'-6"	F502	" "
118		4'-2"	N500	Sidewalk
5		4'-5"	N501	"
1		5'-0"	N502	"
8		21'-10"	R500	Railing
16		20'-10"	R501	"

STRAIGHT BARS

NO	SIZE	LENGTH	MK	LOCATION
25	*5	5'-2"	R502	End Post +
8		14'-8"	R503	Railing
8		20'-10"	R504	"
8		19'-8"	R505	"
8		14'-2"	R506	"
8		19'-11	R507	"
48		21 0	R508	"
4	*4	19'-8"	N400	Sidewalk
2		20'-10"	N401	"
2		21'-10"	N402	"
2		17'-10"	N403	"
2		18'-10"	N404	"
2		5'-9"	S401	Deck Slab
2		2'-10"	S402	" "
120		0'-7"	S403	" "
18		11'-6"	T402	Abutment
18		9'-6"	T403	"
24		10'-10"	T404	"
36		22'-6"	T407	"
100		31'-5"	T408	"
10		23'-6"	V402	Abutment Parapet
20		31'-4"	V403	" "
10		21'-3	V404	" "
6		1'-9"	V405	" "
4		4'-6"	V406	" "
3		6'-3	V407	" " +
46		24'-8"	W400	Wall Stem
28		22'-2"	W401	" "
26		20'-2"	W402	" "
43		23'-8"	W403	" "
20		21'-5"	W404	" "
23		19'-5"	W405	" "
2		4'-3"	V408	Abutment Parapet
2		5'-0"	V409	" "

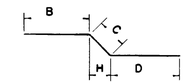

TYPE 3

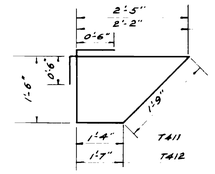

TYPE 22

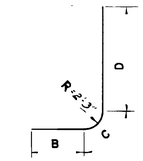

TYPE 11

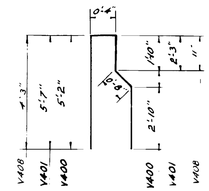

TYPE 23

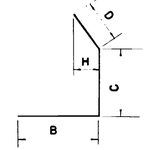

TYPE 12

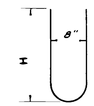

TYPE S11

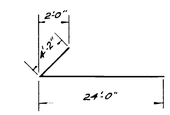

TYPE 13

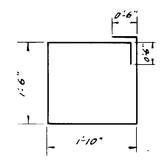

TYPE T2

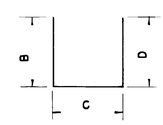

TYPE 17

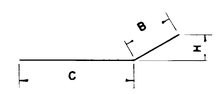

TYPE 19

Note
All dimensions are out-to-out of Bar
All Reinforcing Bars shall conform to A.S.T.M. Specifications A 305-49

RECEIVED
CHIEF ENGINEER ROADS
PROVIDENCE, RHODE ISLAND

RHODE ISLAND
DEPARTMENT OF PUBLIC WORKS
DIVISION OF ROADS & BRIDGES

LAFAYETTE R.R. BRIDGE
NORTH KINGSTOWN, R.I.

REINFORCEMENT

DRAWN BY R.A.C. TRACED BY R.S.P. CHECKED BY J.K.T.

APPROVED Samuel A. Guzzi BRIDGE ENGINEER

SET NO.
PRINTED

FINAL DATE JAN 16, 1953
APPROVED C. E. Hudson PRINCIPAL HIGHWAY ENGINEER

ISSUED TO

243,013

243,014

FED. ROAD DIV. NO	STATE	FED. AID PROJ. NO	FISCAL YEAR	SHEET NO	TOTAL SHEETS
1	R.I.	F-05(1)	POST WAR	30 N	196

TYPICAL SECTIONS

ASPHALTIC CONCRETE PAVEMENT HOT MIX CLASS I TYPE I-1
1 1/2" SURFACE COURSE
1 1/2" BINDER COURSE
6" CRUSHED STONE OR CRUSHED GRAVEL BASE COURSE

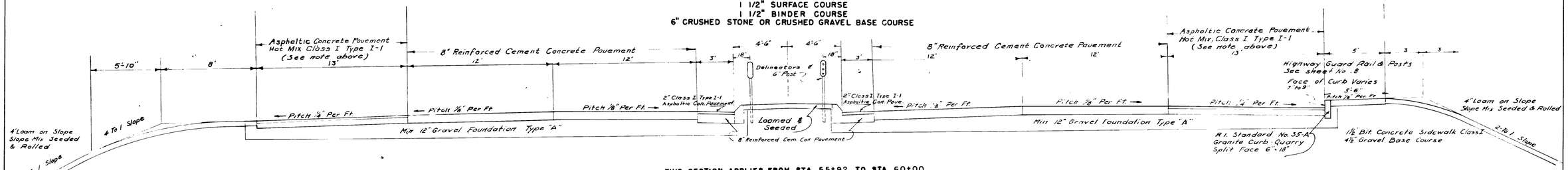

THIS SECTION APPLIES FROM STA. 55+92 TO STA. 60+00
61+50 TO STA. 68+17

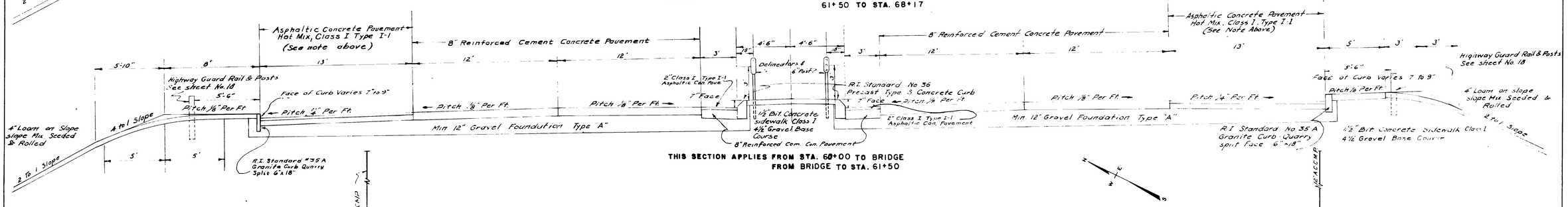

THIS SECTION APPLIES FROM STA. 60+00 TO BRIDGE
FROM BRIDGE TO STA. 61+50

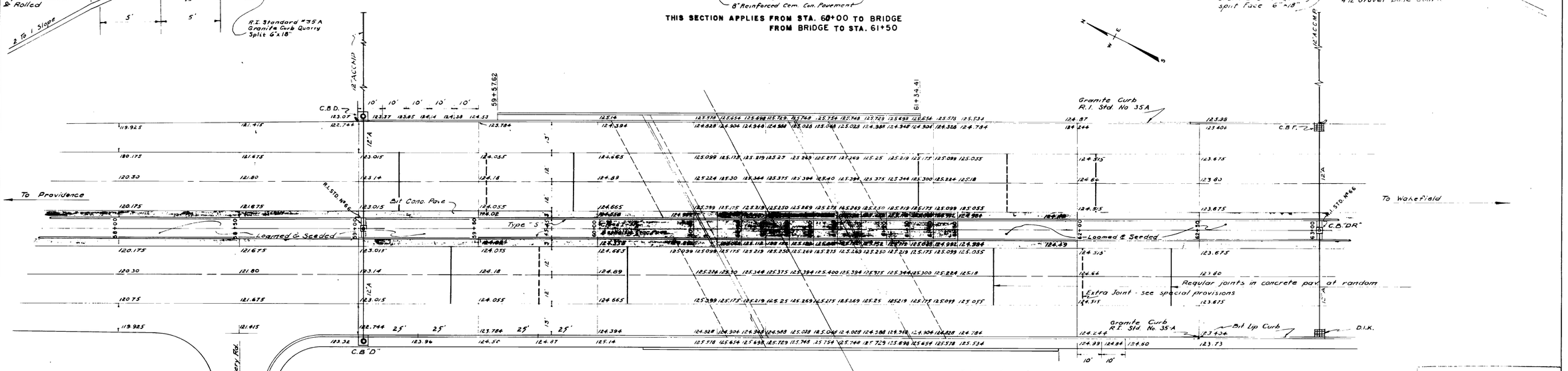

GRADE PLAN
SCALE: 1" = 20'

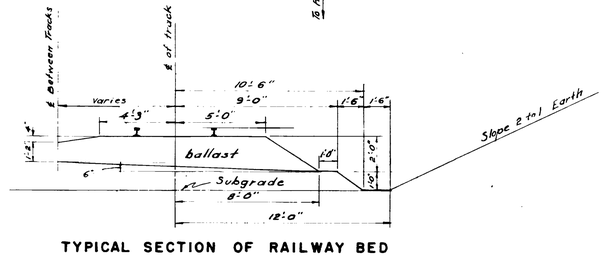

TYPICAL SECTION OF RAILWAY BED
SCALE: 1" = 4'

Note
Drainage Profiles are 25' and parallel on each side of the ℄ between abutments. 0+00 is 150' South of the intersection of the ℄ between abutments and the Longitudinal Bridge ℄. The stations run Northerly.

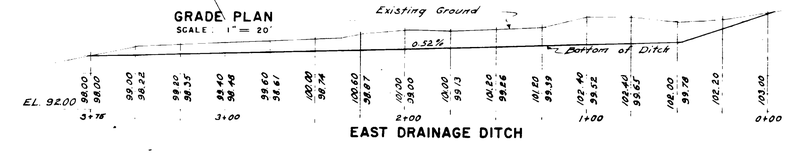

EAST DRAINAGE DITCH

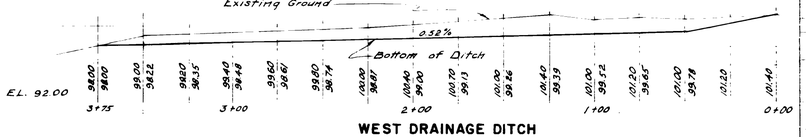

WEST DRAINAGE DITCH
PROFILE SCALE: HOR. 1" = 40'
VERT. 1" = 8'

REVISIONS		
NO.	DATE	BY

C. W. FINN & CO.
CONSULTING ENGINEERS
PROVIDENCE, RHODE ISLAND

RHODE ISLAND
DEPARTMENT OF PUBLIC WORKS
DIVISION OF ROADS & BRIDGES

LAFAYETTE R.R. BRIDGE
NORTH KINGSTOWN, R.I.

TYPICAL ROAD SECTIONS & GRADE PLAN

DRAWN BY N.P. TRACED BY R.P.S. CHECKED BY J.J.W.

APPROVED David B. Gaspin BRIDGE ENGINEER

SET NO.
PRINTED
ISSUED

FINAL DATE JAN. 16, 1953

APPROVED PRINCIPAL HIGHWAY ENGINEER

243,014

243,015

FED. ROAD SYS. NO.	STATE	FED. AID PROJ. NO.	FISCAL YEAR	SHEET NO.	TOTAL SHEETS
1	R. I.	F-05(1)	1951 W.P.	30 0	196

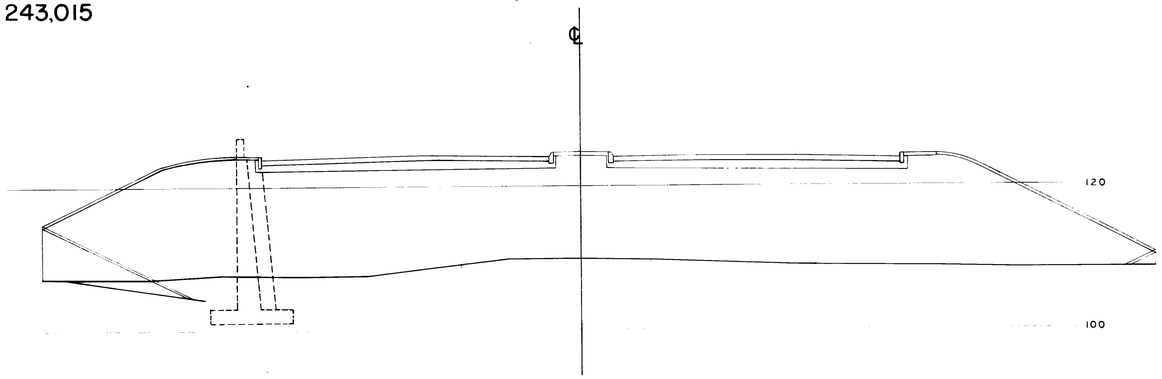

59+57.62

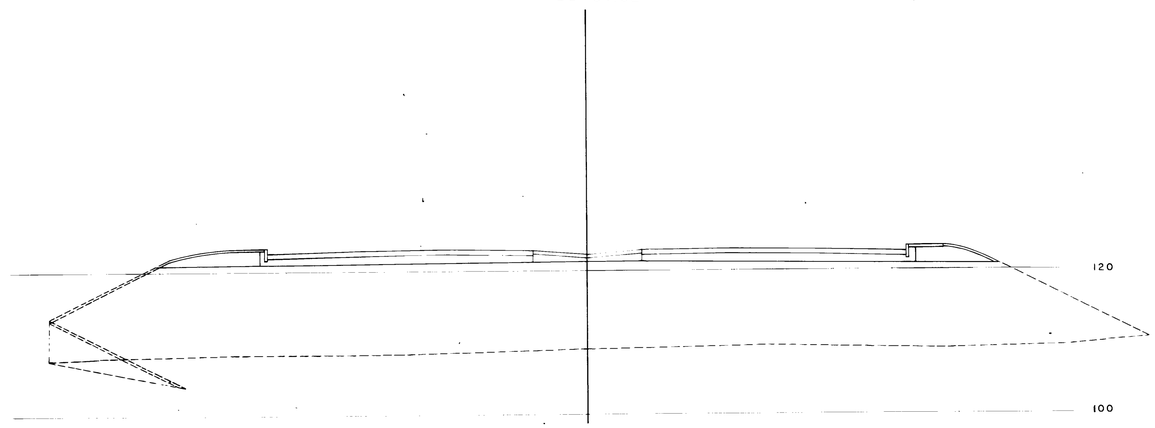

59+25

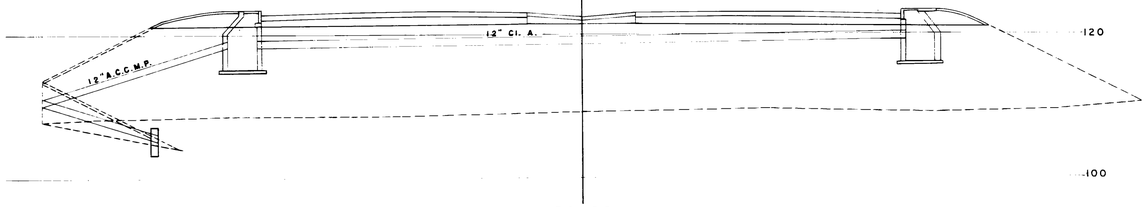

59+00

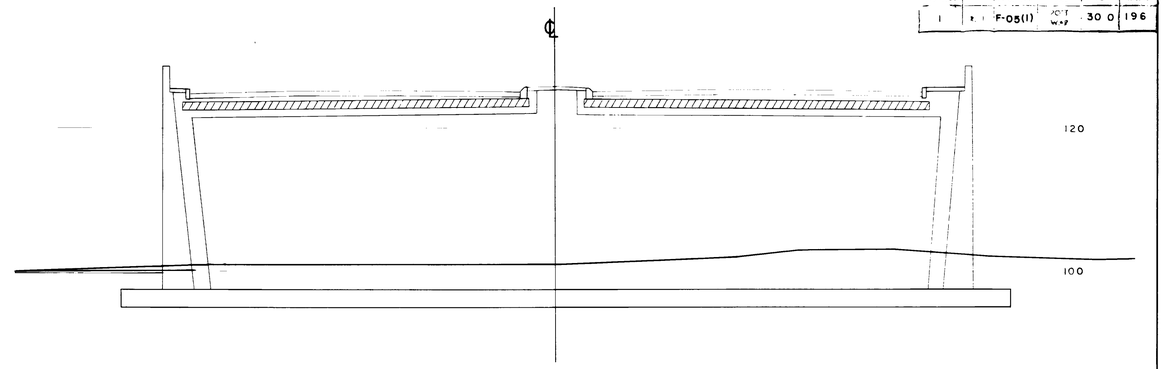

60+44
SKEW SECTION

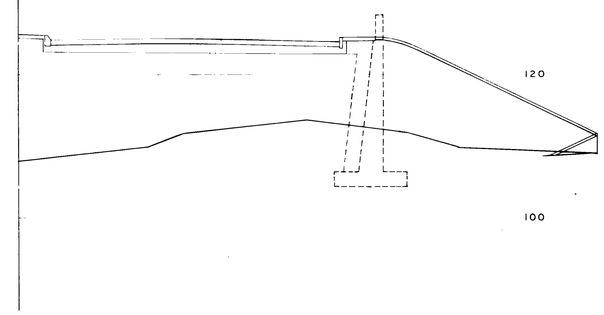

60+19.14

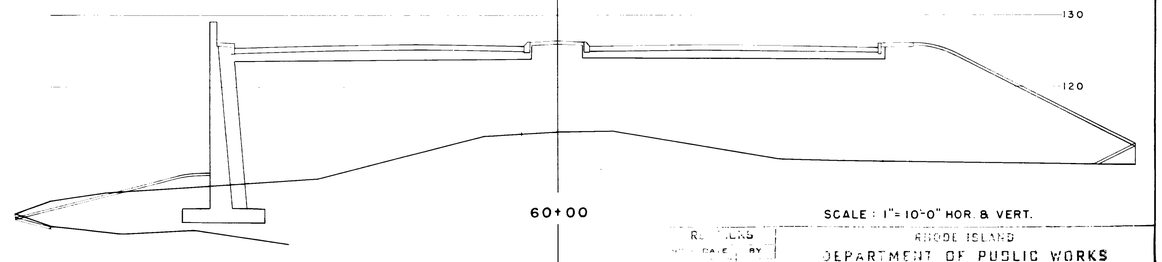

60+00

SCALE: 1" = 10'-0" HOR. & VERT.

REVISIONS		
NO.	DATE	BY

C. W. RIVA CO.
CONSULTING ENGINEERS
PROVIDENCE, RHODE ISLAND

RHODE ISLAND
DEPARTMENT OF PUBLIC WORKS
DIVISION OF ROADS & BRIDGES

LAFAYETTE R. R. BRIDGE
NORTH KINGSTOWN, R. I.

ROAD SECTIONS

DRAWN BY N. P. TRACED BY R.P.S. CHECKED BY J.J.W.

APPROVED Lewis A. Cargill
BR. DIV. ENGINEER

SET NO.
PRINTED
ISSUED TO

FINAL DATE
JAN. 16, 1953

APPROVED B. K. Hudson
PRINCIPAL HIGHWAY ENGINEER

243,015

243,016

FINE NO.	STATE	FED. AID PROJ. NO.	FISCAL YEAR	SHEET NO.	TOTAL SHEETS
1	R. I.	F-05(1)	POST WAR	30 P	196

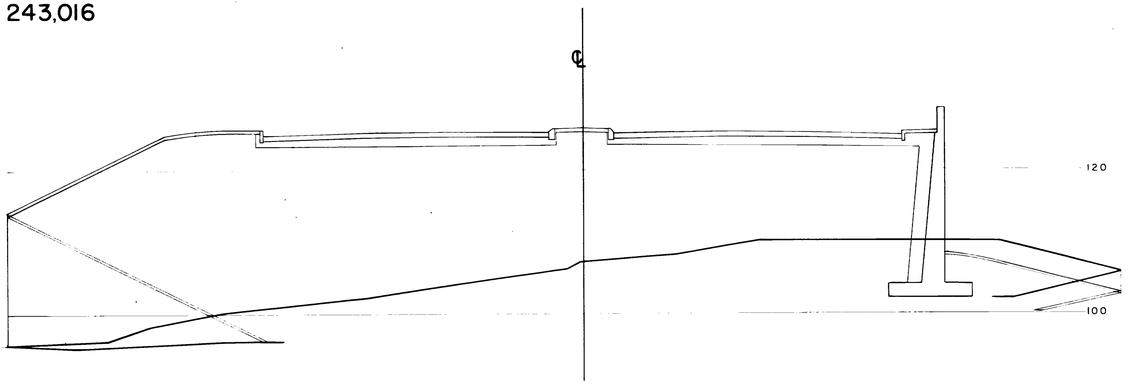

61+50

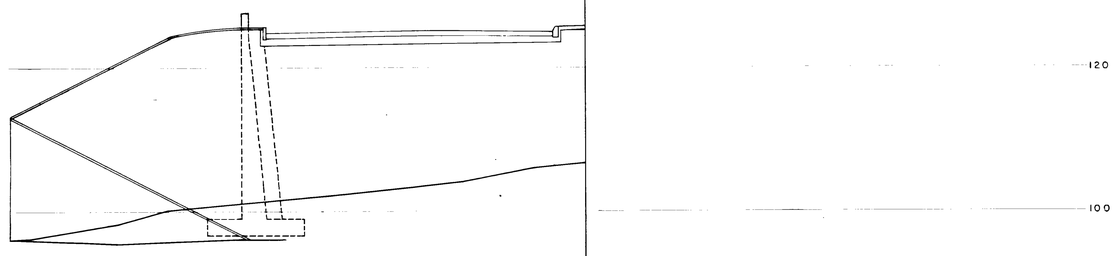

61+34.41

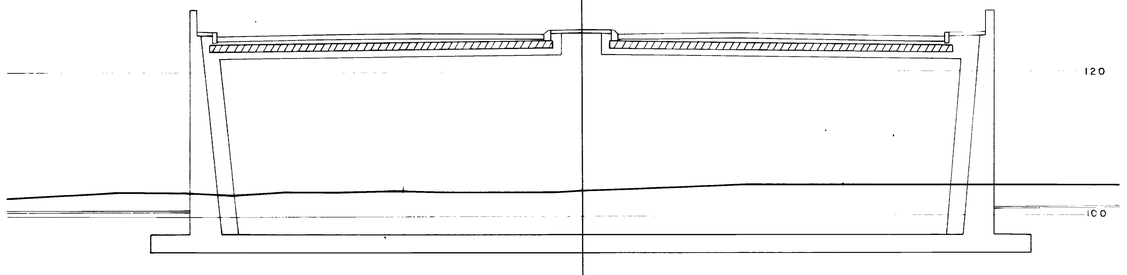

61+09
SKEW SECTION

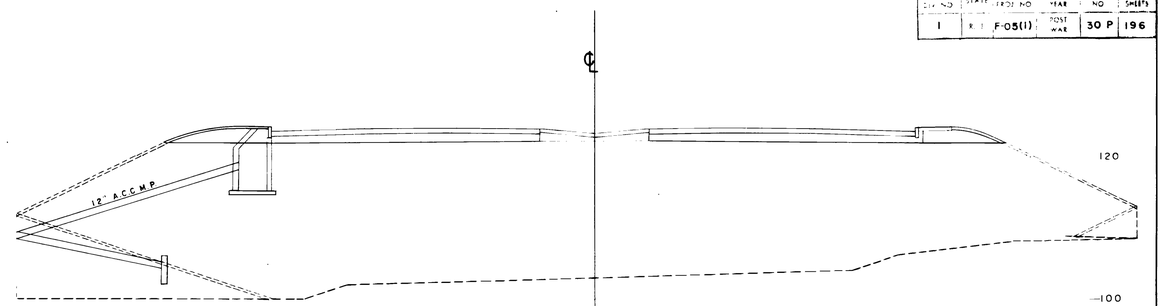

62+50

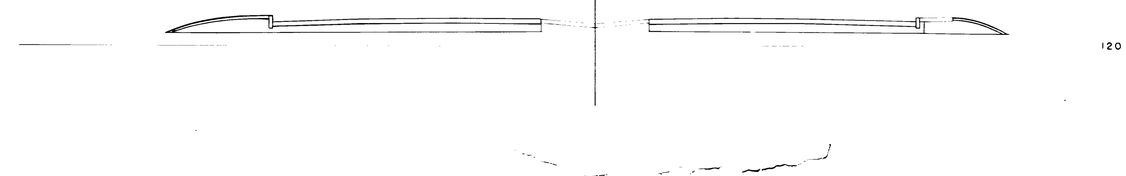

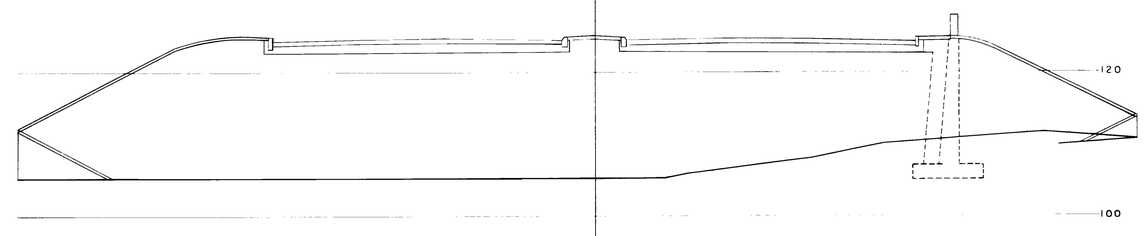

61+92.92

SCALE: 1" = 10'-0" HOR. & VERT.

REVISIONS		
NO.	DATE	BY

C. W. RIVA CO.
CONSULTING ENGINEERS
PROVIDENCE, RHODE ISLAND

RHODE ISLAND
DEPARTMENT OF PUBLIC WORKS
DIVISION OF ROADS & BRIDGES

LAFAYETTE R.R. BRIDGE
NORTH KINGSTOWN, R.I.

ROAD SECTIONS

DRAWN BY N. P. TRACED BY R. P. S. CHECKED BY J.L.W.

APPROVED Daniel O'Brien BRIDGE ENGINEER

SET NO.
PRINTED
ISSUED TO

FINAL DATE JAN 16, 1953

APPROVED E. H. Sanderson PRINCIPAL HIGHWAY ENGINEER

243,016

243,017

F.D. ROAD DIV. NO.	STATE	FED. AID PROJ. NO.	FISCAL YEAR	SHEET NO.	TOTAL SHEETS
1	R.I.	F-05(1)	POST WAR	30 Q	196

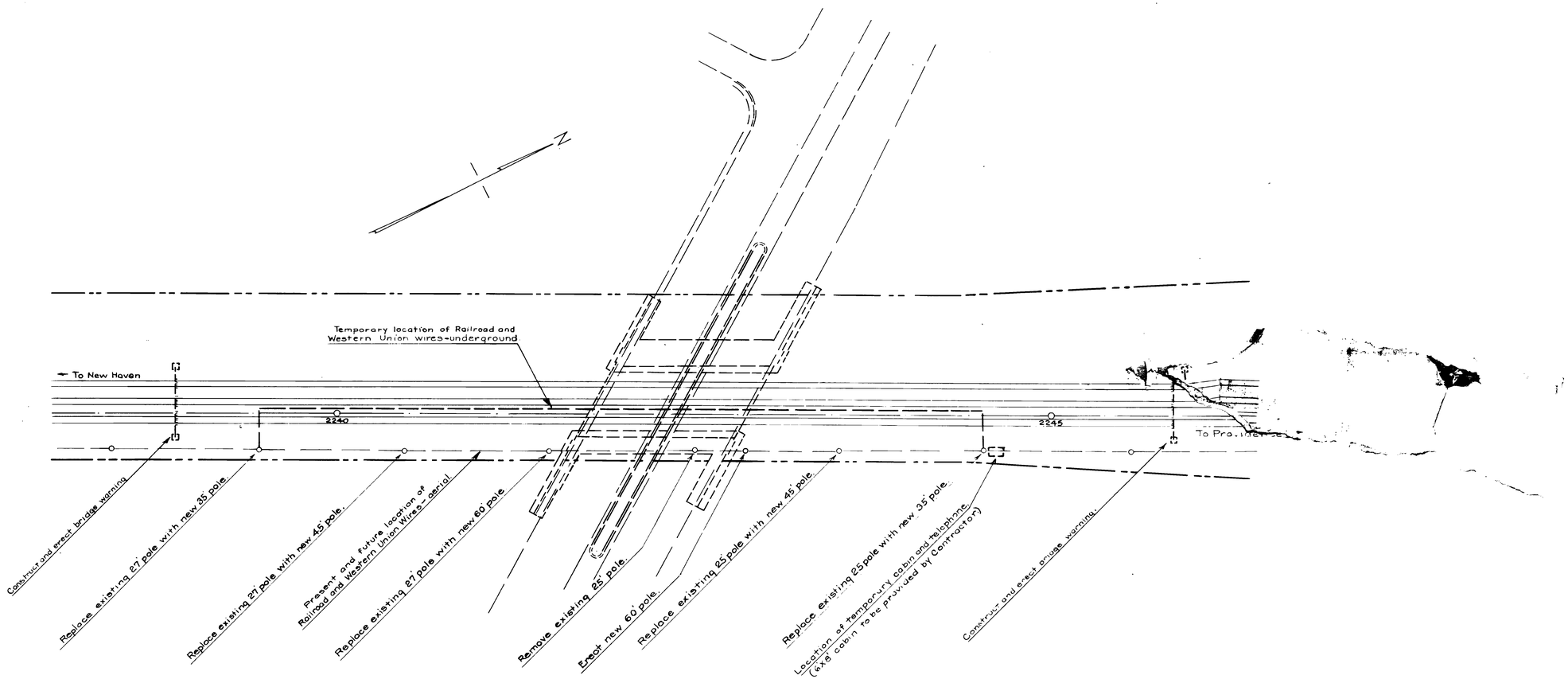

SCALE : 1" = 40'

N.Y. N.H. & H. R.R.
PROVIDENCE – NEW LONDON BRANCH
R.R. BRIDGE NO. 42.42

RAILROAD WORK

Temporary- Install Railroad and Western Union wires in underground ducts.
Permanent- Restore Railroad and Western Union wires on new pole line.
Install, maintain and remove telephone.
Provide engineering inspection.
Construct and erect bridge warnings.

BY CONTRACTOR.

Provide 6'x8' cabin with provisions for heating.

REVISIONS		
NO.	DATE	BY

RHODE ISLAND
DEPARTMENT OF PUBLIC WORKS
DIVISION OF ROADS & BRIDGES

LAFAYETTE R.R. BRIDGE
NORTH KINGSTOWN, R.I.

R.R. ELECTRICAL WORK

DRAWN BY R.R. TRACED BY K.R. CHECKED BY R.R.
APPROVED Samuel A. Frazier BRIDGE ENGINEER
SHEET No.
PRINTED
FINAL DATE JAN 16, 1953
APPROVED R. J. Sanderson PRINCIPAL HIGHWAY ENGINEER
ISSUED TO

243.017

B.M. NO. 40-C
36" OAK

B.M. NO. 39-C
12" OAK

℄ MEDIAN DATA	
ANGLE	38°14-00'
TAN	800.00'
ARC	1540.05'
RAD.	2308.09'
CURVE	2.5/10°
S.E.	12" FT

B.M. NO. 38-C
12" OAK

B.M. NO. 37-C
8" OAK

STATE FREEWAY LINE

SPECIAL BOUNDARY WIRE FENCE

P.T. 52+35.66

STA. 55+40

CLASS I TYPE I-1 PAVE.

C.B. DR.

CLASS I TYPE I-1 PAVEMENT

WOODED AREA

SWAMP & HEAVY BRUSH
SMALL MAPLES

SPECIAL BOUNDARY WIRE FENCE

℄ STATE FREEWAY LINE

B.M. NO. 36-C
TWIN OAK

NOTE:
ON HORIZONTAL CURVE FINISHED GRADES SHOWN ARE 19.5 FT. WEST OF MEDIAN ℄
SEE GRADE SHEETS FOR FINISHED GRADES

300' V.C.

+3.00%

+0.50%

P.C. 51+00

P.I. 52+50

P.T. 54+00

℄ ELEV. 60

45+00 +50 46+00 +50 47+00 +50 48+00 +50 49+00 +50 50+00 +50 51+00 +50 52+00 +50 53+00 +50 54+00 +50 55+00 +50 56+00 +50 57+00 +50

NORTH KINGSTOWN
TOWER HILL ROAD
FROM CRANSTON CORNER
TO SHADY LEA

HORIZONTAL SCALE 40 FEET PER INCH
VERTICAL SCALE 6 FEET PER INCH

C. W. RIVA CO.
CONSULTING ENGINEERS
PROVIDENCE, RHODE ISLAND

190 SHEETS SHEET NO. 15

ROAD IDN. NO.	STATE	FED. AID PROJ. NO.	FISCAL YEAR	SHEET NO.	TOTAL SHEETS
1	R.I.	F-05(1)	1967	16	196

B.M. NO. 34-C
8 HD. CONC. STEP

B.M. NO. 35-C
BOULDER

R.R. RIGHT OF WAY

R.R. RIGHT OF WAY

R.R. MONUMENT CENTER LINE

STATE ℄ STA. 60+84.44 = 2242+34.49

STATE FREEWAY LINE

SPECIAL BOUNDARY WIRE FENCE

NOTE: MAINTAIN FILL SO AS TO PERMIT PASSAGE OF TRAFFIC

FISH HATCHERY RD.

STA. 69+00

STA. 58+50 = STA. 0+44.00

WOODED AREA (SMALL LOCUST TREES)

GRANITE CURB R.I. STD. NO. 35A

CLASS I TYPE 1-1 PAVE.

CLASS I TYPE 1-1 PAVE. (2)

1½" BIT. CONCRETE SIDEWALK CLASS 1-4½ GRAVEL BASE COURSE

FOR TYPICAL CROSS SECTION SEE SHEET NO. 30N

4'-6" Sidewalk

SPECIAL BOUNDARY WIRE FENCE

℄ STATE FREEWAY LINE

P.C. 64+79.43

N.Y. N.H. & H.R.R.

Type F Port.

℄ MEDIAN DATA

ANGLE =	30° 46' 40"
TAN. =	900.00'
ARC. =	1,756.51'
RAD. =	3269.91'
CURVE =	1 8/10°
S.E. =	1.4' FT.

NOTE:
ON HORIZONTAL CURVE FINISHED GRADES SHOWN ARE 19.5 FT. EAST OF MEDIAN ℄
SEE GRADE SHEETS FOR FINISHED GRADES

P.C. 58+50

P.I. 61+50

P.T. 64+50

Proposed Road ℄ Grade

+3.00%

-4.50%

ELEV. 100'

300' V.C.

600' V.C.

NORTH KINGSTOWN
TOWER HILL ROAD
FROM CRANSTON CORNER TO SHADY LEA

C. V. RIVA CO.
CONSULTING ENGINEERS
PROVIDENCE, RHODE ISLAND

HORIZONTAL SCALE 1" = 40 FEET PER INCH
VERTICAL SCALE 5 FEET PER INCH

196 SHEETS SHEET NO. 16

CHARLES BRUNING COMPANY

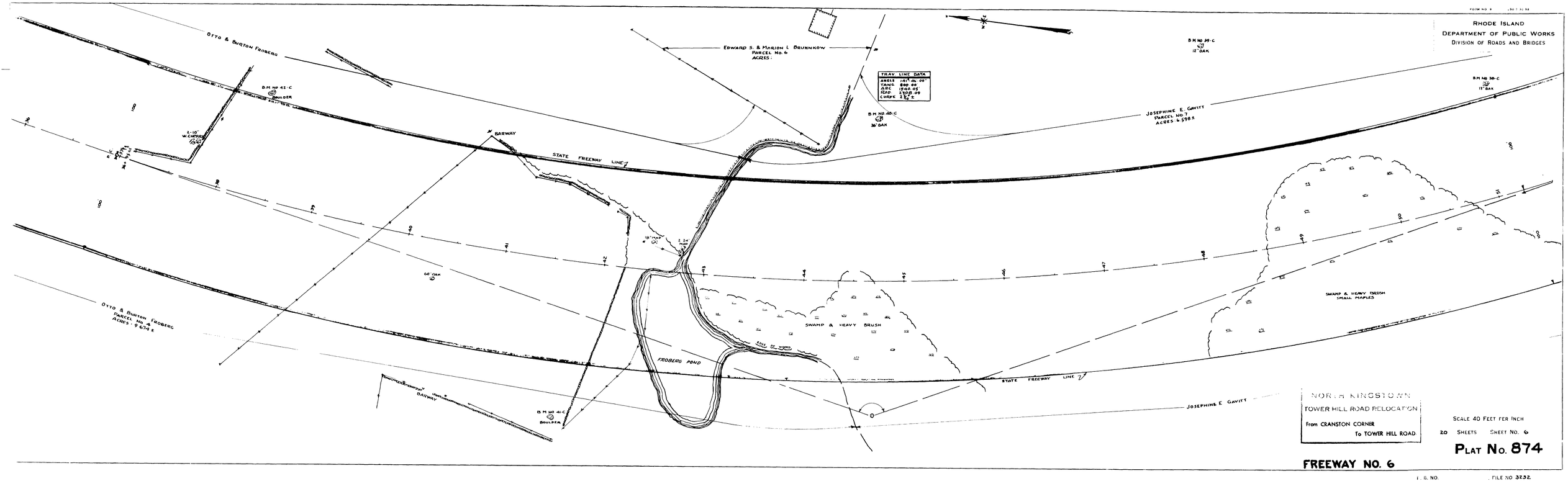
RHODE ISLAND
DEPARTMENT OF PUBLIC WORKS
DIVISION OF ROADS AND BRIDGES
OTTO & BURTON FROBERG
EDWARD S. & MARION L. BRUNNKOW
PARCEL No. 6
ACRES:
TRAV. LINE DATA
ANGLE 141° 46' 00"
TANG. 890.00
CHORD 1900.05
RAD. 1500.00
CURVE 2½°
B.M. NO. 39-C
12" OAK
B.M. NO. 38-C
12" OAK
B.M. NO. 40-C
36" OAK
JOSEPHINE E. GAVITT
PARCEL NO. 7
ACRES 6.598 ±
B.M. NO. 42-C
BOULDER
2-10" W. CHESTNUT
BARWAY
STATE FREEWAY LINE
18" MAP
7-24" MAP
60" OAK
SWAMP & HEAVY BRUSH
SWAMP & HEAVY BRUSH
SMALL MAPLES
FROBERG POND
EDGE OF WOODS
OTTO & BURTON FROBERG
PARCEL No. 4
ACRES 9.674 ±
BARWAY
B.M. NO. 41-C
BOULDER
STATE FREEWAY LINE
JOSEPHINE E. GAVITT
NORTH KINGSTOWN
TOWER HILL ROAD RELOCATION
From CRANSTON CORNER
To TOWER HILL ROAD
SCALE 40 FEET PER INCH
20 SHEETS SHEET No. 6
PLAT No. 874
FREEWAY NO. 6
F. B. NO.
FILE NO 3232

FORM NO. 9 1951 7.31.52

RHODE ISLAND
DEPARTMENT OF PUBLIC WORKS
DIVISION OF ROADS AND BRIDGES

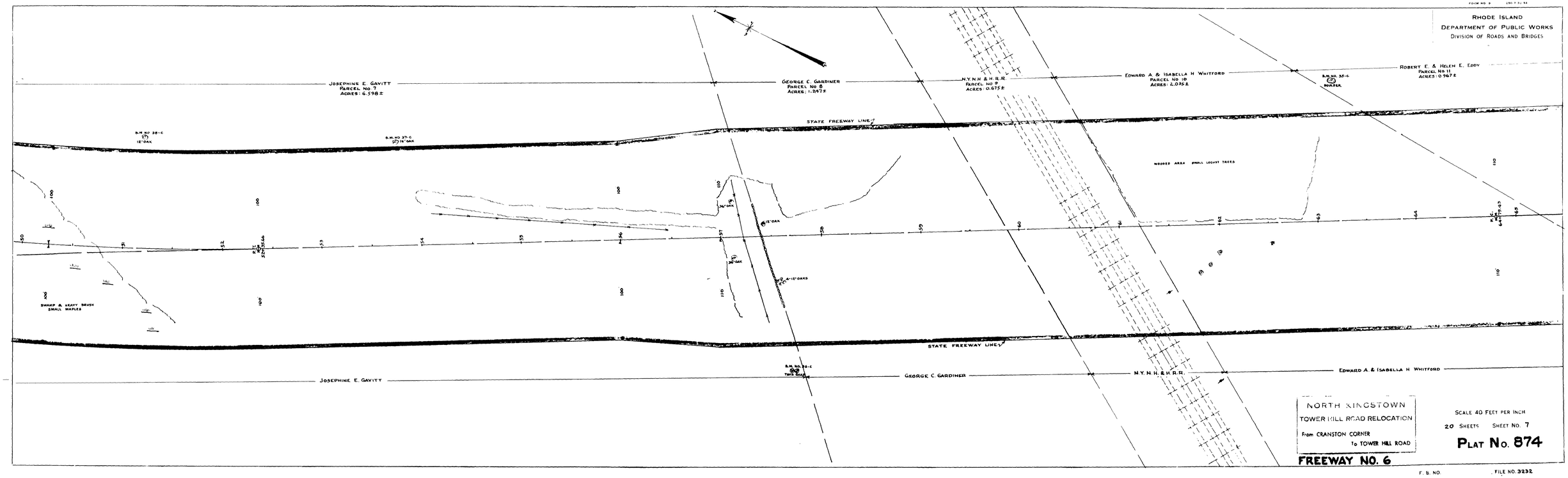

NORTH KINGSTOWN
TOWER HILL ROAD RELOCATION
From CRANSTON CORNER
To TOWER HILL ROAD

SCALE 40 FEET PER INCH
20 SHEETS SHEET NO. 7

PLAT NO. 874

FREEWAY NO. 6

F. B. NO.

FILE NO. 3232

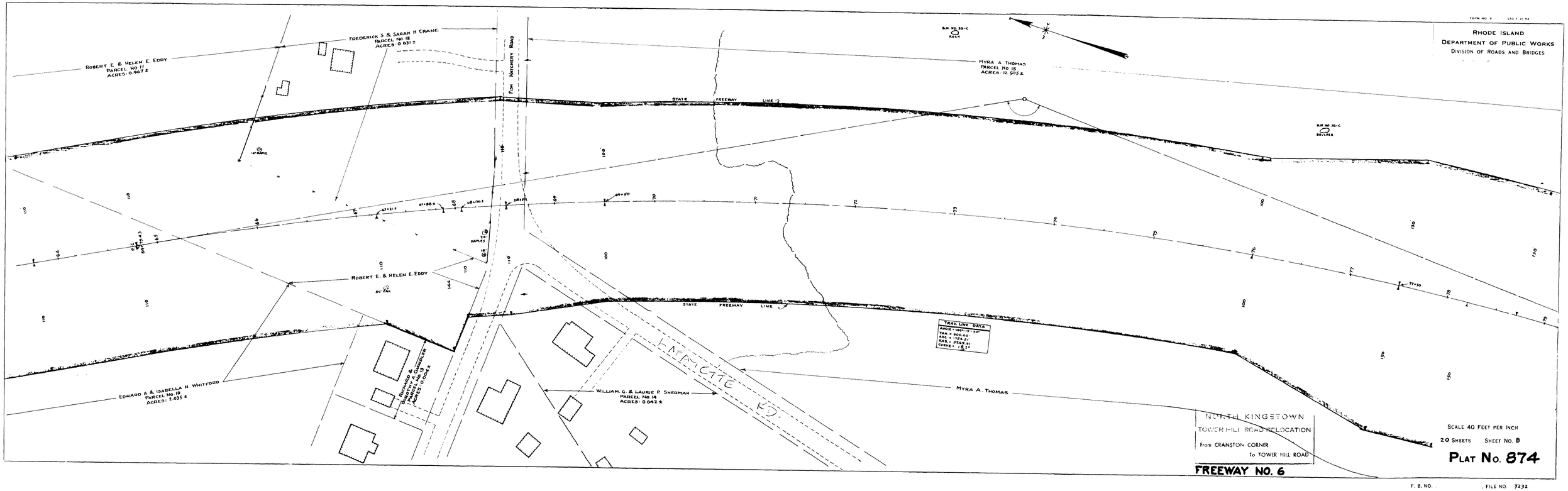
RHODE ISLAND
DEPARTMENT OF PUBLIC WORKS
DIVISION OF ROADS AND BRIDGES
FREDERICK S. & SARAH H. CRANE
PARCEL NO. 12
ACRES: 0.631 ±
ROBERT E. & HELEN E. EDDY
PARCEL NO. 11
ACRES: 0.967 ±
FISH HATCHERY ROAD
MYRA A. THOMAS
PARCEL NO. 15
ACRES: 12.505 ±
B.M. NO. 35-C
ROCK
B.M. NO. 36-C
BOULDER
STATE FREEWAY LINE
14" MAPLE
MAPLES
24" OAK
ROBERT E. & HELEN E. EDDY
EDWARD A. & ISABELLA N. WHITFORD
PARCEL NO. 10
ACRES: 2.035 ±
RICHARD & DOROTHY A. CHANDLER
PARCEL NO. 13
ACRES: 0.094 ±
WILLIAM G. & LAURIE P. SHERMAN
PARCEL NO. 14
ACRES: 0.042 ±
MYRA A. THOMAS
TRAV. LINE DATA
ANGLE = 165°-13'-50"
TAN = 900.00'
ARC = 1224.21'
RAD. = 2749.31'
CURVE = 2°-5'-0"
NORTH KINGSTOWN
TOWER HILL ROAD RELOCATION
From CRANSTON CORNER
To TOWER HILL ROAD
FREEWAY NO. 6
SCALE 40 FEET PER INCH
20 SHEETS SHEET NO. 8
PLAT NO. 874
F. B. NO.
FILE NO. 7232

FORM NO. 9 250 7-30-53

RHODE ISLAND
DEPARTMENT OF PUBLIC WORKS
DIVISION OF ROADS AND BRIDGES

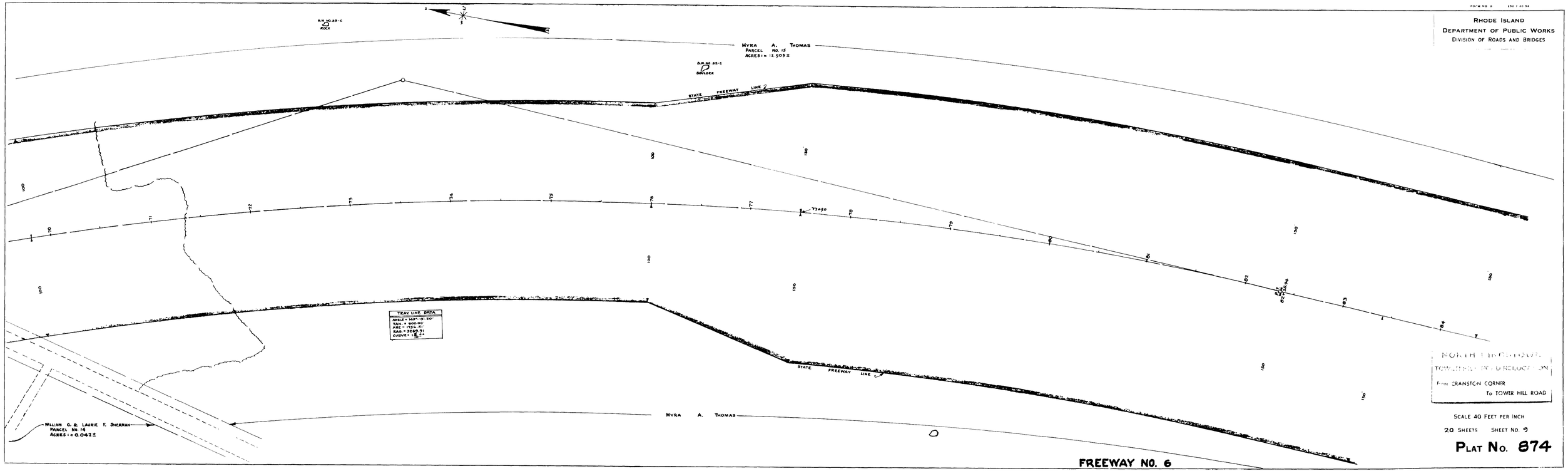

NORTH FREEWAY
TOWER HILL ROAD RELOCATION
From CRANSTON CORNER
To TOWER HILL ROAD

SCALE 40 FEET PER INCH

20 SHEETS SHEET NO. 9

PLAT NO. 874

FREEWAY NO. 6

F. B. NO. FILE NO. 3232

FORM NO. 5 (REV. 7-1-53)

RHODE ISLAND
DEPARTMENT OF PUBLIC WORKS
DIVISION OF ROADS AND BRIDGES

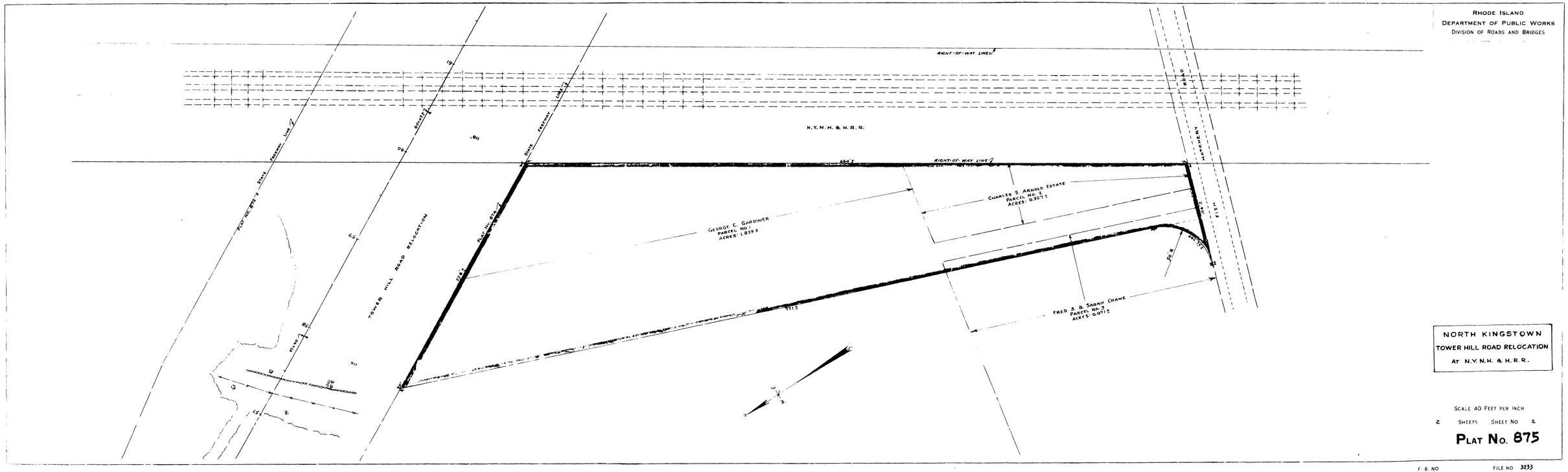

NORTH KINGSTOWN
TOWER HILL ROAD RELOCATION
AT N.Y.N.H. & H.R.R.

SCALE 40 FEET PER INCH

2 SHEETS SHEET NO 2

PLAT NO. 875

F. B. NO

FILE NO. 3233

PUB. RD. DIV. NO.	STATE	FED. AID PROJ. NO.	FISCAL YEAR	SHEET NO.	TOTAL SHEETS
1	R.I.		1984	3	3

RHODE ISLAND
DEPARTMENT OF TRANSPORTATION
DIVISION OF PUBLIC WORKS

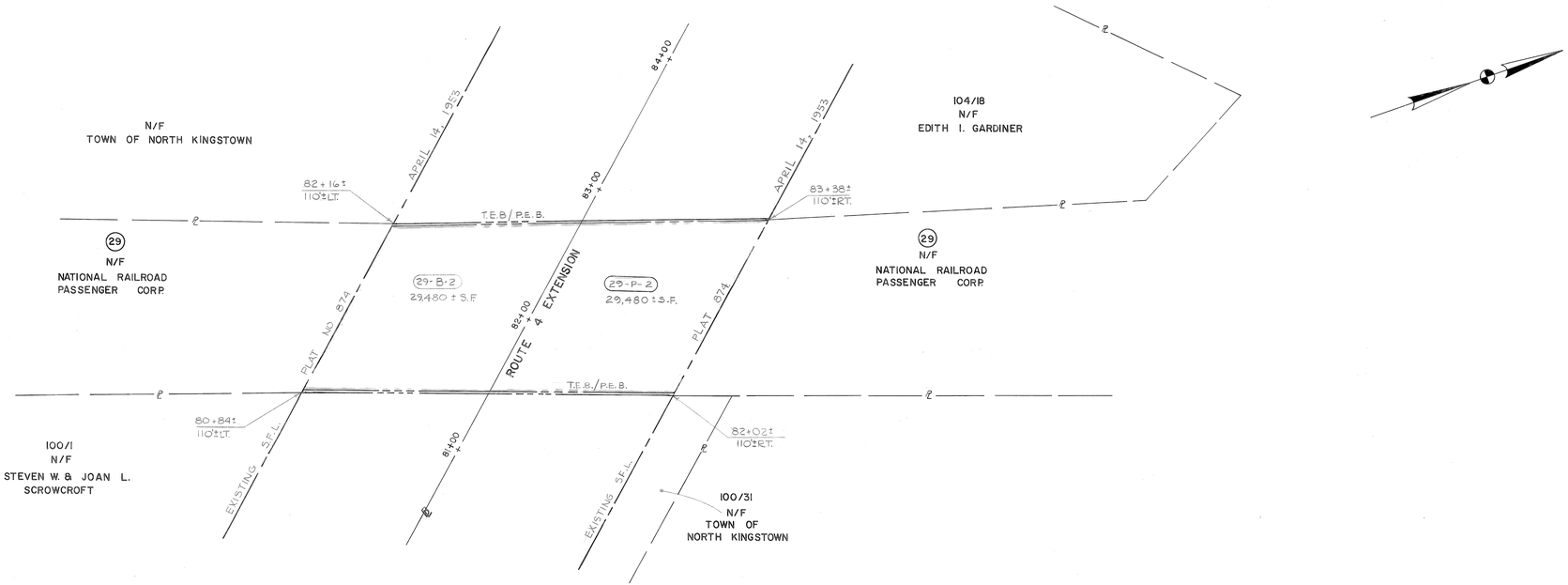

NORTH KINGSTOWN
ROUTE 4 - EXTENSION
ROUTE 4 (COL. RODMAN HIGHWAY)
TO
SCRABBLETOWN ROAD

SCALE: 40 FEET PER INCH
3 SHEETS SHEET NO. 3

PLAT NO. 2047

F.B. NO. _____ FILE NO. _____

FORM NO. 5 ESO-7-20-52

RHODE ISLAND
DEPARTMENT OF PUBLIC WORKS
DIVISION OF ROADS AND BRIDGES

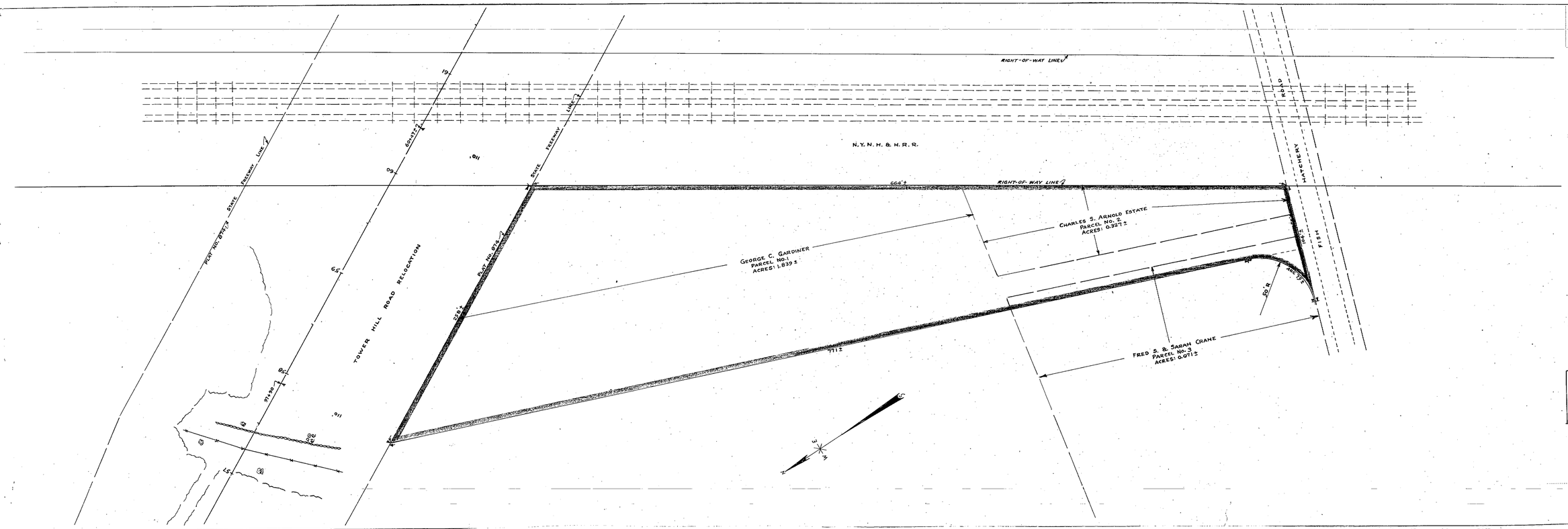

NORTH KINGSTOWN
TOWER HILL ROAD RELOCATION
AT N.Y.N.H. & H.R.R.

SCALE 40 FEET PER INCH

2 SHEETS SHEET NO. 2

PLAT NO. 875

RHODE ISLAND
DEPARTMENT OF PUBLIC WORKS
DIVISION OF ROADS AND BRIDGES

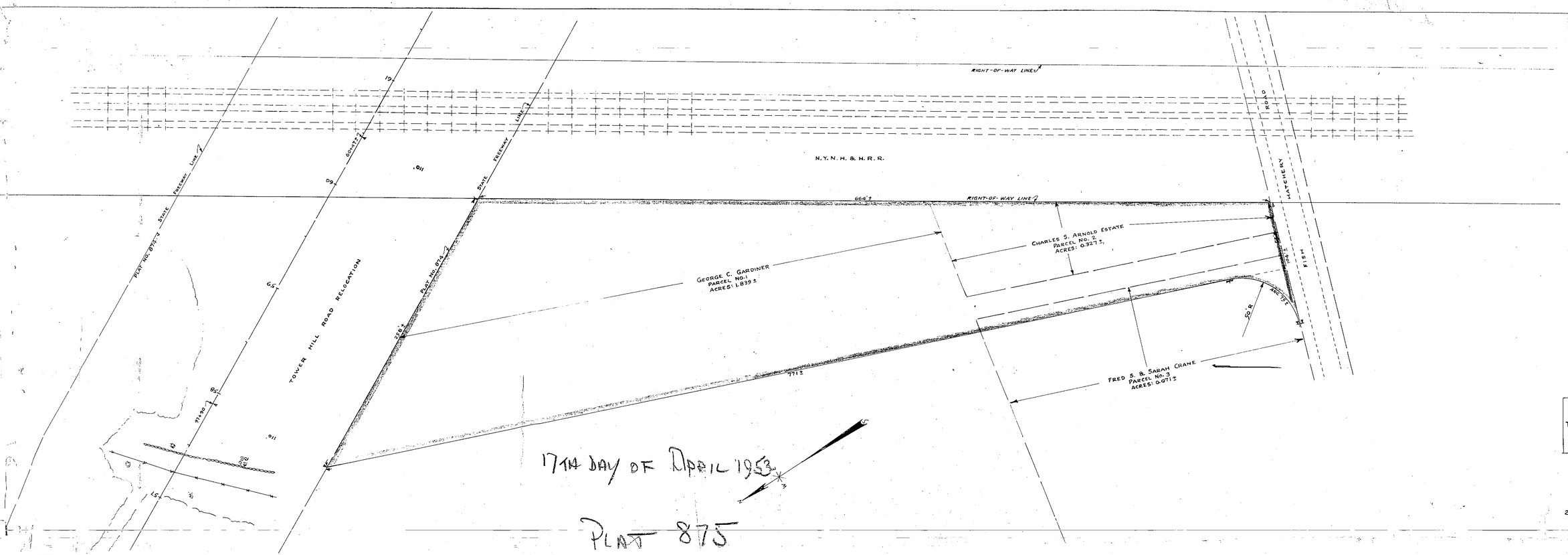

NORTH KINGSTOWN
TOWER HILL ROAD RELOCATION
AT N.Y.N.H. & H.R.R.

SCALE 40 FEET PER INCH

2 SHEETS SHEET NO. 2

PLAT No 875

RICN 8650

FED. ROAD DIV. NO.	STATE	FED. AID PROJ. No	FISCAL YEAR	SHEET NO.	TOTAL SHEETS
1	R.I.	IXAF-0004(006) IXAFG-8888(071) FG-4444(009)	1986	1	469

(R-1)

LIST OF PLANS (Set 1)

Sheet No.	Description
1	Cover Sheet
2	Key Plan
3	General Notes
4	Legend
5 - 7	Typical Sections (1-3)
8 - 9	Drainage Details (1-2)
10	Typical Detention Pond Section (Ramp "F" Infield)
11	Special Median Barrier (Cast In Place)
12	Miscellaneous Details
13	Maintenance & Protection of Traffic Details
14	Scrabbletown Brook Construction Details
15 - 42	General Plans (1-28)
43 - 70	Location Plans (1-28)
71 - 74	Grade Plans (1-4)
75 - 103	Profile Plans (1-29)
104 - 105	Sign Location Key Plans (1-2)
106 - 125	Signing, Lighting & Pavement Markings Plans (1-20)
126 - 128	Sign Details (1-3)
129 - 131	Lighting Details (1-3)
132 - 133	Commuter Parking Area (1-2)
134 - 135	Traffic Signal Plans (1-2)
136	Traffic Signal General Notes (R. I. Std. 19.6)
137	Installation Details - Inductance Loop Vehicle Detector (R. I. 19.5)
138 - 144	Maintenance & Protection of Traffic Plans (1-7)
145	Detour Sign Plan
146 - 148	Temporary Bypass Road Profiles (1-3)
149 - 153	Planting Plans (1-5)
154 - 160	Boring Logs (1-7)
161 - 184	Rhode Island Standard Details
184a	Pressure Reducing Valve Pit Details
185 - 469	Cross-Sections (1-286)

SET 2 - BRIDGE PLANS

B1 - B18	HATCHERY ROAD RAILROAD BRIDGE NO. 783
B1 - B25	LAFAYETTE ROAD BRIDGE NO. 781
B1 - B32	TEN ROD ROAD BRIDGE NO. 780
B1 - B37	STONY LANE BRIDGE NO. 768
B1 - B17	LAFAYETTE RAILROAD BRIDGE NO. 243 & S.C.T. BRIDGE NO. 766

RHODE ISLAND SPECIFICATIONS AND STANDARD DETAILS

Specifications to govern this project are Rhode Island Specifications for Road and Bridge Construction, Revision of 1971, with corrections and addenda, dated June 1, 1974, pages 1-36, and approved by the U. S. D. O. T., F. H. W. A. and State and Federal Special Provisions included in the contract documents. Standard details for this project are Rhode Island Standard Details, dated 1974. The following standard details are included in this project:

STD. NO.	DESCRIPTION
1.1	UNDERDRAIN
1.2	COMBINATION DRAIN
1.5	CORRUGATED METAL BENDS AND BANDS
2.12	ROCKFILL RIP-RAP @ FLARED END SECTIONS
2.6	PRECAST CONCRETE FLARED END SECTIONS
3.1	MANHOLE, BRICK OR BLOCK, 4' DIAMETER
3.2	MANHOLE, 5' OR 6' DIAMETER
4.3	CATCH BASIN TYPE "F" BOUND
4.4	CATCH BASIN TYPE "F" BRICK - SQUARE
4.6	CATCH BASIN TYPE "M" BRICK OR BLOCK
4.8	CATCH BASIN, 5' OR 6' DIAMETER
4.12	PRECAST CONCRETE DROP INLET
4.16	DOUBLE GRATE CATCH BASIN
4.17	CATCH BASIN WITH DOUBLE GRATES
5.12	SQUARE FRAME AND GRATE
5.13	SQUARE FRAME AND GRATE
5.14	ROUND FRAME AND GRATE
5.16	HIGH CAPACITY FRAME AND GRATE
5.21	ROUND FRAME AND COVER - LIGHT DUTY MANHOLE
5.22	ROUND FRAME AND COVER - HEAVY DUTY MANHOLE
5.33	CATCHBASIN/MANHOLE STEP
7.11	PRECAST CONCRETE CURB
7.14	PRECAST CONCRETE APRON STONE FOR SQUARE CATCH BASIN
7.15	PRECAST CONCRETE APRON STONE FOR ROUND CATCH BASIN
7.16	PRECAST CEMENT CONCRETE CURB, 2' OR 3' RADIUS CORNER
7.17	PRECAST CONCRETE TRANSITION CURB
7.18	PRECAST CONCRETE WHEELCHAIR RAMP CURB
7.21	PRECAST CONCRETE CURB
7.24	PRECAST CONCRETE CURB TRANSITION
7.27	PRECAST CONCRETE TRANSITION CURB
7.43	BITUMINOUS BERM
8.3	RIP-RAP DITCH
9.1	BALED HAY EROSION CHECK
9.2	BALED HAY DITCH EROSION CHECK
9.3	BRUSH EROSION CHECK
9.4	LOG AND HAY CHECK DAM
9.5	BALED HAY EROSION CHECK
10.1	WET STONE MASONRY RETAINING WALL
14.1	CONCRETE HIGHWAY BOUND
15.3	POST & MOUNTING - RURAL MAIL BOX
16.1	PRECAST CONCRETE LIGHT STANDARD BASE
18.10	PRECAST HANDHOLE TYPE "A"
18.4	breakaway SUPPORT COUPLINGS FOR LIGHT STANDARDS
18.5	RECESSED BOLT COUPLINGS FOR LIGHT STANDARDS
18.6	SERVICE PEDESTAL
18.9	PRECAST HANDHOLE TYPE "A"
18.11	PRECAST HEAVEY-DUTY HANDHOLE
19.1	GROUND MOUNTED CONTROLLER INSTALLATION
19.10	STREET NAME SIGNS
19.3	STEEL SPAN POLE
19.9	POLE MOUNTED CABINET INSTALLATION
24.0	GENERAL NOTES (REGULATORY AND WARNING SIGN MOUNTINGS)
24.1	REGULATORY AND WARNING SIGN MOUNTING
24.2	ROUTE MARKER MOUNTING
24.3	ROUTE MARKER MOUNTING
24.7	DIRECTIONAL SIGN MOUNTING
24.8	DIRECTIONAL SIGN MOUNTING
24.9	WARNING SIGN MOUNTING
24.11	REGULATORY SIGN MOUNTING
24.12	WARNING SIGN MOUNTING
24.13	BRIDGE ABUTMENT MARKER
24.15	LIGHT WEIGHT STEEL DELINEATOR
25.0	GENERAL NOTES (CONSTRUCTION AND TEMPORARY SIGNS AND MOUNTINGS)
25.5	CONSTRUCTION AND TEMPORARY SIGN MOUNTINGS
26.15	(PVC) PLASTIC PIPE BARRICADE
26.4	DRUM MARKINGS
26.5	POLYETHYLENE DRUM WITH MARKINGS
26.6	FLUORESCENT TRAFFIC CONE
27.0	REGULATORY SIGNS
28.0	WARNING SIGNS
29.0	GUIDE SIGNS & CONSTRUCTION SIGNS
31.3	CHAIN LINK FENCE, 5' - 6'
31.31	CHAIN LINK FENCE, ENDS OR CORNER POSTS
31.32	CHAIN LINK FENCE, INTERMEDIATE POSTS
31.33	CHAIN LINK FENCE, END BAND
32.10	WOVEN WIRE RIGHT-OF-WAY FENCE
34.1	TYPICAL INSTALLATION
34.3	BURIED APPROACH TREATMENT
34.31	STEEL BEAM GUARDRAIL
34.32	STEEL BEAM GUARDRAIL
34.34	STEEL BEAM GUARDRAIL FIXTURE
34.35	BACK-UP PLATE STEEL BEAM GUARDRAIL FIXTURE
34.5	ANCHORAGE APPROACH SECTION
34.51	ANCHORAGE APPROACH SECTION DETAILS
34.6	ANCHORAGE DETAIL TRAILING END
34.8	GUARDRAIL CONNECTION TO BARRIER
34.9	GUARDRAIL CONNECTION TO BARRIER TRAILING END
40.1	PRECAST MEDIAN BARRIER
40.2	PRECAST MEDIAN BARRIER
40.3	PRECAST MEDIAN BARRIER TRANSITION UNIT
40.4	PRECAST MEDIAN BARRIER WITH LIGHT STANDARD
40.5	PRECAST MEDIAN BARRIER FOR TEMPORARY TRAFFIC CONTROL
43.2	BITUMINOUS CONCRETE SIDEWALK
43.31	WHEELCHAIR RAMP
43.4	DRIVEWAY DEVELOPMENT
44.1	PRECAST (ONE WAY) 2'
44.2	PRECAST (TWO WAY) 2'
45.1	PRECAST CEMENT CONCRETE REFLECTORIZED CONE MARKERS
50.1	PLANTING SHRUBS & SMALL TREES
50.7	TREE WELLS
50.8	TREE WELLS
51.1	TREE PROTECTION DEVICE
51.2	SHRUB PROTECTION DEVICE
40.6	PRECAST MEDIAN BARRIER ON BRIDGES

STATE OF RHODE ISLAND

DEPARTMENT OF TRANSPORTATION
DIVISION OF PUBLIC WORKS

PLAN, PROFILE AND SECTIONS OF PROPOSED

STATE HIGHWAY

ROUTE 4 EXTENSION

• PHASE IIA •

TOWN OF NORTH KINGSTOWN — WASHINGTON COUNTY
TOWN OF EAST GREENWICH — KENT COUNTY

R.I. CONTRACT NO. 8650 F. A. PROJECT NO'S. IXAF-0004(006) IXAFG-8888(071) FG-4444(009)

1½" SURFACE COURSE TYPE I-1, 2 - 1½" BINDER COURSES
6" MODIFIED BITUMINOUS BASE COURSE
12" GRAVEL BORROW SUBBASE COURSE (MIN.)
3.826 MILES

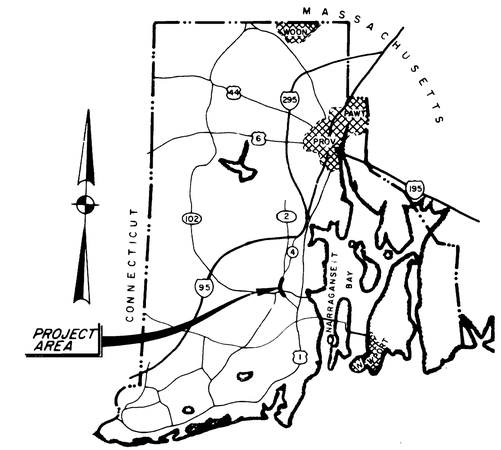

LOCATION MAP
NOT TO SCALE

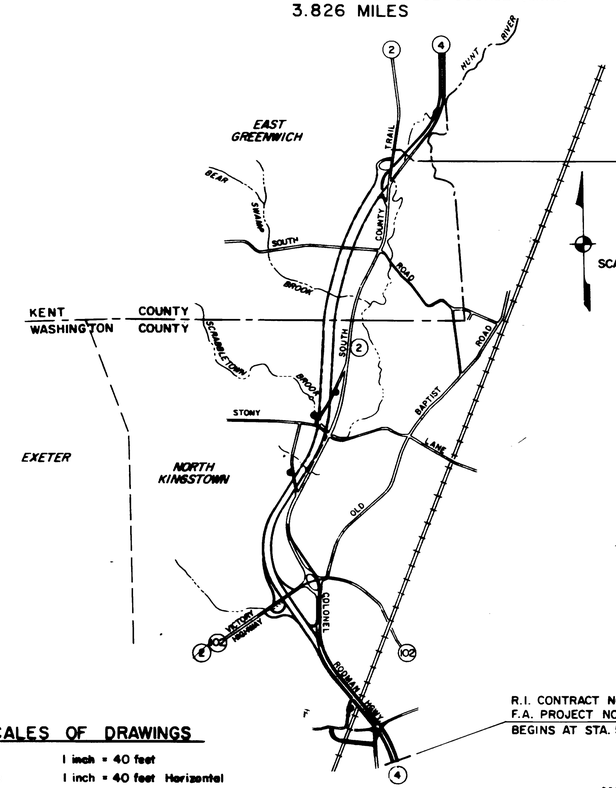

R.I. CONTRACT NO. 8650
F.A. PROJECT NO'S. IXAF-0004(006), IXAFG-8888(071) & FG-4444(009)
ENDS AT STA. 255+00

SCALE: 1" = 2000'

R.I. CONTRACT NO. 8650
F.A. PROJECT NO'S. IXAF-0004(006), IXAFG-8888(071) & FG-4444(009)
BEGINS AT STA. 53+00

DESIGN DESIGNATION

1975	ADT	=	23,000 VEHICLES
2000	ADT	=	40,000 VEHICLES
	DHV	=	12% ADT
	T	=	4% ADT
	DESIGN SPEED	=	70 MPH

SCALES OF DRAWINGS

Plans	1 inch = 40 feet
Profiles	1 inch = 40 feet Horizontal
"	1 inch = 8 feet Vertical
Cross Sections	As Noted

BASE OF LEVELS
M. S. L.

WATERMAN ENGINEERING CO.
CIVIL ENGINEERS
EAST PROVIDENCE RHODE ISLAND

SET 1 { Contract Number 8650
Number of Sheet 1
Total Sheets 469

R.I. DEPARTMENT OF TRANSPORTATION
DIVISION OF PUBLIC WORKS

APPROVED
CHIEF OF DESIGN — DATE 3-7-86
APPROVED
CHIEF ENGINEER — DATE 1-22-
DIRECTOR — DATE

DEPARTMENT OF TRANSPORTATION
FEDERAL HIGHWAY ADMINISTRATION

APPROVED
DIVISION ADMINISTRATOR — DATE

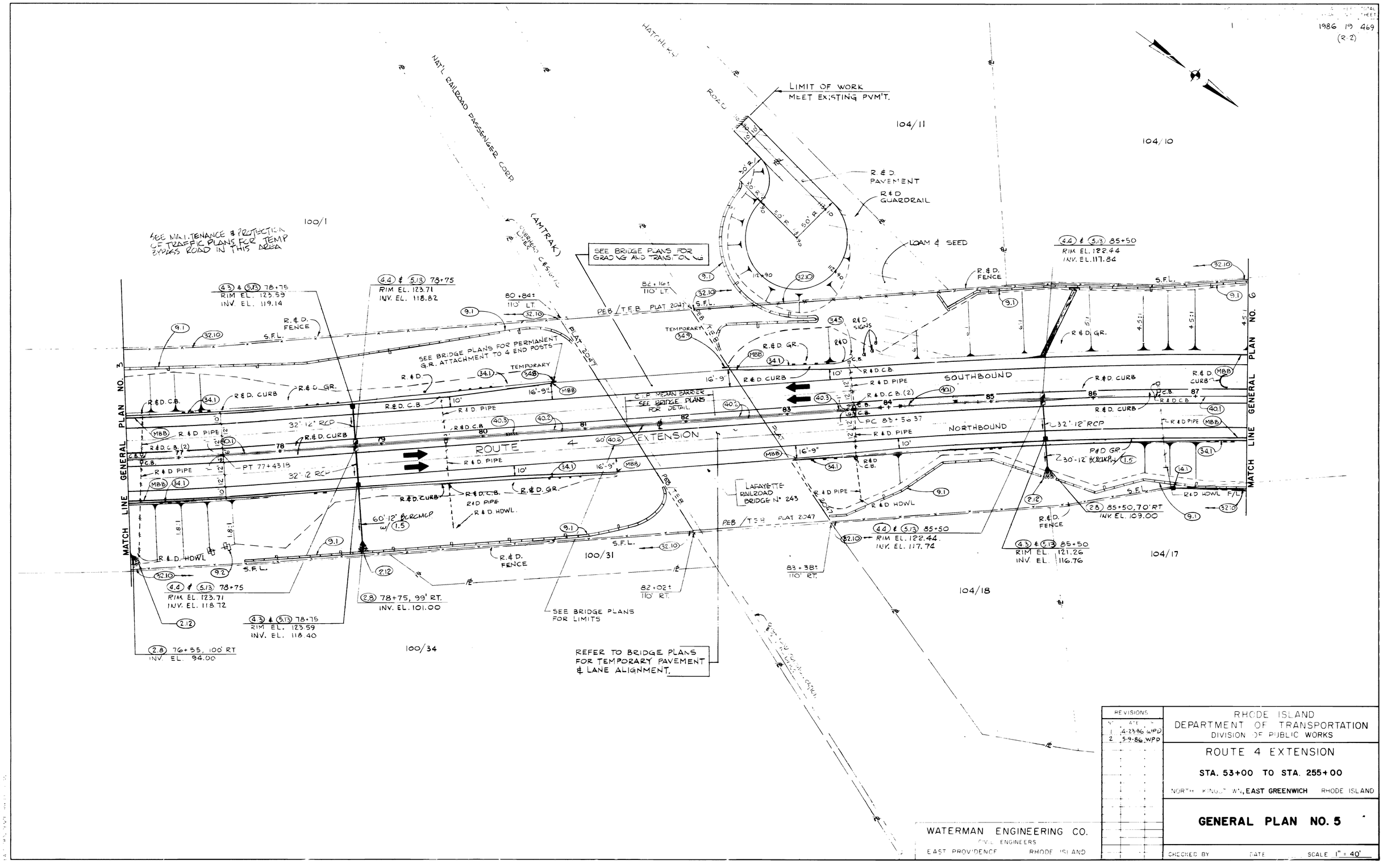

REVISIONS	
N°	DATE
1	4-23-86 WPD
2	5-9-86 WPD

RHODE ISLAND
DEPARTMENT OF TRANSPORTATION
DIVISION OF PUBLIC WORKS

ROUTE 4 EXTENSION

STA. 53+00 TO STA. 255+00

NORTH KINGSTOWN, EAST GREENWICH RHODE ISLAND

GENERAL PLAN NO. 5

WATERMAN ENGINEERING CO.
CIVIL ENGINEERS
EAST PROVIDENCE RHODE ISLAND

CHECKED BY DATE SCALE 1" = 40'

Photogrammetric Mapping by
H-S & ASSOCIATES
PHOTOGRAMMETRISTS, INC.

1986 20 469
(R-2)

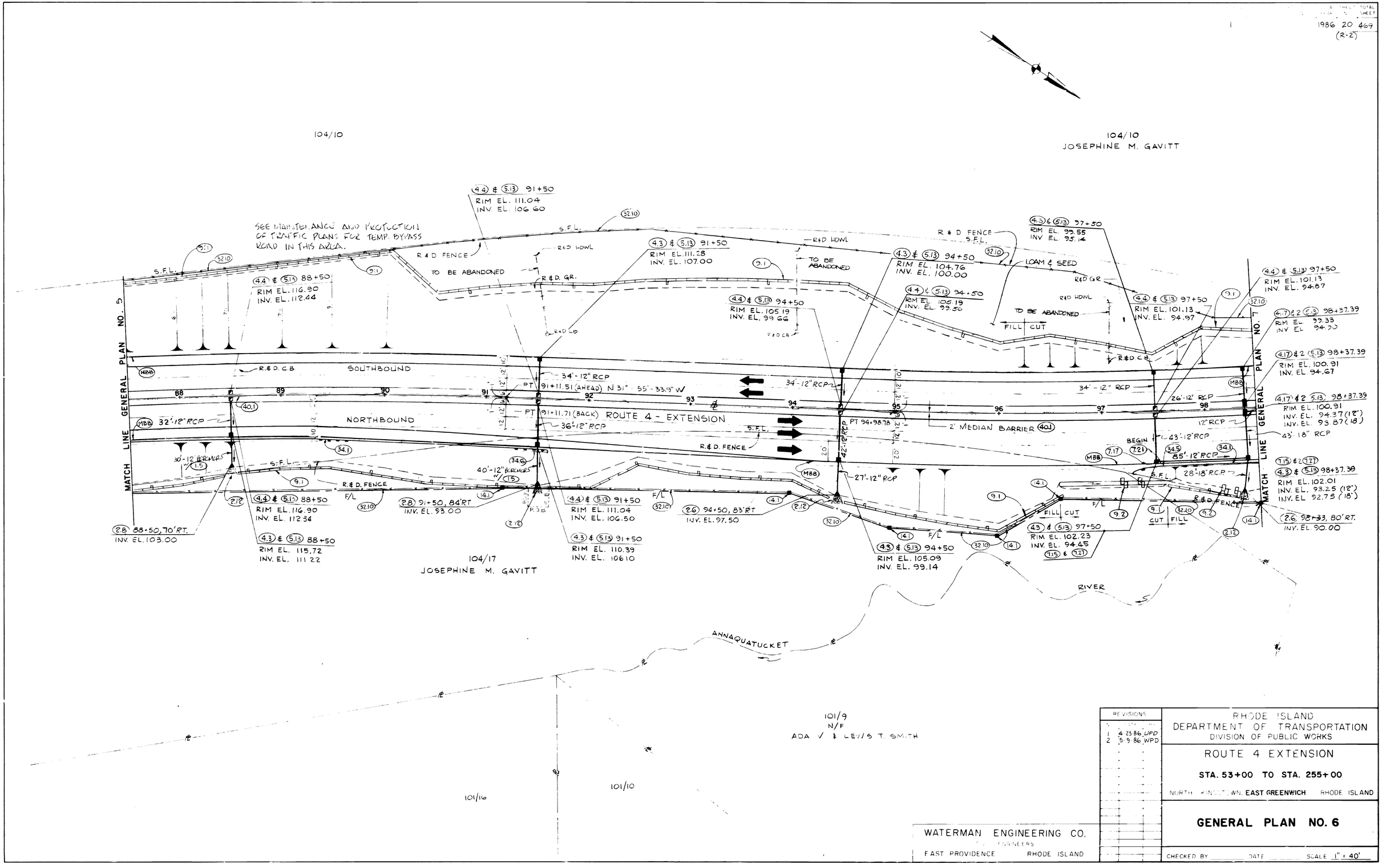

REVISIONS	
1	4-23-86 UPD
2	5-9-86 WPD

WATERMAN ENGINEERING CO.
ENGINEERS
EAST PROVIDENCE RHODE ISLAND

RHODE ISLAND
DEPARTMENT OF TRANSPORTATION
DIVISION OF PUBLIC WORKS

ROUTE 4 EXTENSION

STA. 53+00 TO STA. 255+00

NORTH KINGSTOWN, EAST GREENWICH RHODE ISLAND

GENERAL PLAN NO. 6

CHECKED BY _____ DATE _____ SCALE 1" = 40'

Photogrammetric Mapping by
H-S & ASSOCIATES
PHOTOGRAMMETRISTS, INC.

FED. ROAD DIV. NO.	STATE	FED. AID PROJ. No.	FISCAL YEAR	SHEET NO.	TOTAL SHEETS
1	R.I.			B-1	17

Sublist of Drawings

Lafayette Railroad Bridge No. 243

B1 Title Sheet
B2 Concrete, Steel and General Notes, Quantities
B3 General Plan
B4 Transverse Sections, Plans and Elevations at Back Walls
B5 Deck Grades
B6 Deck and Parapet Reinforcing
B7 Expansion Joint Detail
B8 Sections at Retaining walls and End Posts, Guardrail Detail
B9 Wing Wall Plans and Elevations
B10 Miscellaneous Details 1 of 2
B11 Miscellaneous Details 2 of 2
B12 Reinforcing Schedule 1 of 2
B13 Reinforcing Schedule 2 of 2

South County Trail Bridge No. 766

B14 General Plan and Transverse Section
B15 List of Quantities and Work Items,
B16 Miscellaneous Details
B17 Details at Expansion Joint

STATE OF RHODE ISLAND

DEPARTMENT OF TRANSPORTATION
DIVISION OF PUBLIC WORKS

PLAN, PROFILE AND SECTIONS OF PROPOSED

STATE HIGHWAY

ROUTE 4 EXTENSION

FROM STA. 53+00 TO STA. 255+00

LAFAYETTE RAILROAD BRIDGE NO. 243
SOUTH COUNTY TRAIL BRIDGE NO. 766

TOWN OF NORTH KINGSTOWN — COUNTY OF WASHINGTON
TOWN OF EAST GREENWICH — COUNTY OF KENT

R.I. CONTRACT NO. 8650

F.A. PROJECT NO. IXAF-0004(006)
IXAFG-8888(071)
FG-4444(009)

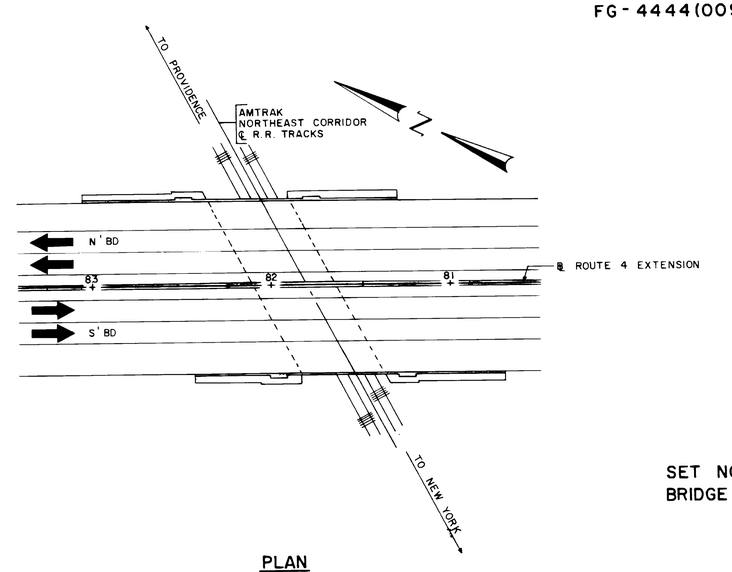

PLAN
SCALE: 1"=40'

BASE OF LEVELS
MEAN SEA LEVEL

DESIGN DATA

LOADING:

In accordance with the latest Specifications of AASHTO for HS-20-44 Loading and the Rhode Island Legal Load.

STRESSES:

Structural Steel ASTM Designation A7(Existing)	fs = 18,000 psi
Structural Steel ASTM Designation A36(New)	fs = 20,000 psi
Reinforcing Steel ASTM Designation A615 Grade 60	fs = 24,000 psi
Concrete Class XX(AE)	f'c = 4,000 psi

BENCH MARKS AND TIES:

See Highway Plans for Bench Marks and Ties.

SET NO. 2
BRIDGE PLANS

R.I. DEPARTMENT OF TRANSPORTATION
DIVISION OF PUBLIC WORKS

APPROVED
CHIEF OF DESIGN — DATE
APPROVED
CHIEF ENGINEER — DATE
APPROVED
DIRECTOR — DATE

DEPARTMENT OF TRANSPORTATION
FEDERAL HIGHWAY ADMINISTRATION

APPROVED
DIVISION ADMINISTRATOR — DATE

Contract Number 8650
Number of Sheet B-1
Total Sheets 17

DRAWN BY: T. ARMITSTEAD, J. HIBBERT
DESIGNED BY: R. MOBERG, N. CAPEZZA

243-001

FED ROAD DIV NO.	STATE	FEDERAL AID PROJECT NO	FISCAL YEAR	SHEET NO	TOTAL SHEET
	R.I.			B-2	17

QUANTITIES

ITEM	UNIT	QUANTITY
LUMP SUM SUPERSTRUCTURE R&D ITEMS		
R&D Concrete Railing & Sidewalk	C.Y.	30
R&D Granite Curb (6" x 11 1/2")	L.F.	122
R&D Precast Curb (Slope Face)	L.F.	122
R&D Asphalt & Gravel Median	C.Y.	16
R&D Asphalt & Concrete Wearing Surface	S.Y.	550
R&D Expansion Joint (Sliding Plates)	L.F.	110
R&D Concrete Deck Slab	C.Y.	150
LUMP SUM SUPERSTRUCTURE ITEMS		
Welded Stud Shear Connectors 3/4" X 7"	Each	1,932
Welded Stud Shear Connectors 3/4" X 8"	Each	552
Concrete Superstructure Cl. XX(AE) Bridge Deck	C.Y.	162
Concrete Superstructure Cl. XX(AE) Parapets	C.Y.	24
Waterproofing Membrane - 3 Ply	S.Y.	630
Slope Face Granite Curb Str. 10" x 15"	L.F.	244
Expansion Joint 3" Extruded Sealer (Neoprene) with Steel and Hardware	L.F.	105
Bituminous Friction Course - 3/4"	S.Y.	625
Asphaltic Overlay- 2 1/4"	Ton	80
Concrete Surface Finish - Rubbed Regular	S.F.	1,180
Concrete Surface Finish - Protective Coating	S.F.	1,180
Mastic Joint Sealer 1" x 1"	L.F.	244
Polyurethane Joint Sealer	C.I.	210
Epoxy Coated Reinforcing Bars, Grade 60	Lbs.	35,900
LUMP SUM STRUCTURAL STEEL ITEM		
ITEM		
A 36 Steel Plates, Furnish, Fabricate and Erect	LbS.	2,500
LUMP SUM BRIDGE ITEM		
Repainting Structural Steel	L.S.	1

LUMP SUM SUBSTRUCTURE R&D ITEMS	UNIT	QUANTITY
R&D Concrete Railing, Pylons, Wall Stem, End Posts	C.Y.	60
R&D Backwall Concrete	C.Y.	18
LUMP SUM SUBSTRUCTURE ITEMS		
1" Saw Cut	L.F.	230
Granite Identification Tablets	Each	4
Concrete Substructure Cl. XX(AE) End Posts	C.Y.	4
Concrete Substructure Cl. XX(AE) Parapets	C.Y.	28
Concrete Substructure Cl. XX(AE) Wall Stems	C.Y.	25
Slope Face Granite Curb Str. 10" X 15"	L.F.	230
Granite Curb (6" X 18")	L.F.	24
Granite Transition Curb	L.F.	24
Granite Transition Curb (R.I. Std. 7.57)	L.F.	24
Concrete Surface Finish - Rubbed Regular	S.F.	1,800
Concrete Surface Finish - Protective Coating	S.F.	10,000
Epoxy Coated Reinforcing Bars Grade 60	Lbs.	7,800
Sawing and Sealing Joint in Bituminous Pavement	L.F.	220
Preformed Joint Filler Cork 1"	S.F.	170
Preformed Joint Filler Bituminous 1/2"	S.F.	20
Preformed Joint Filler Bituminous 1/4"	S.F.	5
Joint Sealer Poured and Caulked, Type A	C.I.	50
Polyurethane Joint Sealer	C.I.	1,100
Concrete Substructure Cl. XX(AE) Backwall Repair	C.Y.	21
Concrete Substructure Cl. XX(AE) Approach Slabs	C.Y.	10
UNIT BID SUBSTRUCTURE ITEMS		
Reconstruction of Concrete Pedestals and Beam Seats	Each	21
Repairs to Structural Concrete Masonry	C.F.	35

GENERAL NOTES

1. All construction indicated on these plans shall be in accordance with the State of Rhode Island Standard Specifications for Road and Bridge Construction, dated 1971, including all revisions to date, the Standard Specifications for Highway Bridges of the American Association of State Highway and Transportation Officials 1983 Edition, including all Interim Specifications, and the Specifications accompanying these plans. In case of conflict, the Special Provisions of the Specifications accompanying these plans shall govern.

2. Dimensions, stations, and elevations are shown to the nearest one-hundredth of a foot or one-eight of an inch, except structural steel dimensions which are to the nearest one-sixteenth of an inch.

3. All elevations are referenced to Mean Sea Level.

4. Angles are shown to the nearest second.

5. All abutment backwalls and retaining walls are drawn looking at the exposed faces.

6. All elevations, dimensions, and stations shown to be field verified. Elevations, dimensions, and stations given are for reference only and are taken (developed) from original contract plans.

7. The approximate quantities shown for R & D items are intended for estimating purposes only, and the Department assumes no responsibility for their accuracy. Any increase or decrease in the quantities listed shall, in no way, relieve the Contractor of his responsibility under the Contract.

STRUCTURAL STEEL NOTES

1. Structural Steel Plates shall conform to the latest provisions of ASTM Designation A36.

2. The upper surface of girder top flanges shall be free of paint, oil or other impurities that would in any way reduce the bond of concrete to steel.

3. Shop Drawings for all fabricated steel expansion joints and falsework shall be submitted to the Engineer in sufficient time to permit careful checking. The fabricator will provide an erection drawing along with the shop drawings.

4. Welding shall be in accordance with Structural Welding Code, AWS D1, 1-80 except as modified by AASHTO Standard Specifications for Welding of Structural Steel Highway Bridges, Third Edition, 1981.

5. A36 Steel used for cover plates (excluding stiffeners and connection plates) shall meet the longitudinal Charpy V-Notch tests of 15 ft.-lbs. at 40°F. Sampling and testing procedures shall be in accordance with ASTM A673-74. V(H) frequency of heat testing shall be used.

6. For shear connector detail, see Sheet B-5.

7. Structural steel shall be painted in accordance with the Special Provisions.

8. [illegible] the [illegible] be left in place. If a conflict does occur the shear connector shall be removed at no extra cost. The cost of removal shall be included in the cost of R&D concrete deck slab.

9. The cover plates may be welded with the beams in place or the beams may be removed and the cover plates installed in any suitable work area. Any structural members damaged in the process shall be repaired or replaced to the satisfaction of the Engineer at the Contractor's expense. Whichever way the work is done the Lump Sum price bid for this item shall constitute full compensation for furnishing all material, labor and equipment necessary to complete the work. During the installation of cover plates the beams shall be adequately braced or restrained to prevent loss of camber.

CONCRETE NOTES

1. Concrete shall be Class XX (AE) as described in Table (1) & (2) under Section 600 Portland Cement Concrete of the Specifications for Road & Bridge Construction, State of Rhode Island and Special Provisions of the Specifications.

2. Air-entrained portland cement concrete shall be provided as required and shall be designated by the symbol (AE) following class of concrete.

3. The allowable working stresses for portland cement concrete and reinforcing steel shall be as required by the AASHTO Standard Specifications for Highway Bridges and the Rhode Island Standard Specifications.

   A. f'c for Class XX shall be 4,000 psi and fc shall be 0.4 (f'c) = 1,600 psi.

   B. Reinforcing steel shall be epoxy coated Grade 60, ASTM Designation A 615 with allowable Tensile Stress of 24,000 psi.

4. Unless otherwise shown on plans, all reinforcing shall be lapped according to the following chart; class A:

   Class of Concrete

Bar Size	XX
No. 4	12"
No. 5	12"
No. 6	14"
No. 7	18"
No. 8	24"

   The laps listed above are for non-critical splices. All critical splices are labeled on the plans.

   In deck slabs: Top bars shall be spliced at center of spans between girders.
   Bottom bars shall be spliced over girders.

5. All reinforcing bars shall have the following minimum cover:
   A. Slabs: top bars 2" and bottom bars 1" (tolerance +1/4", -0").
   B. Stirrups and ties: 2"
   C. Parapets: 2".
   D. All other bars 2-1/2".

6. Horizontal construction joints other than those shown on the plans or as authorized by the Engineer will not be permitted.

7. All exposed edges and re-entrant corners not otherwise detailed shall have a minimum 3/4" chamfer. End posts shall be dressed with square corners.

8. All joint filler to be premoulded, non-expansive, non-extruding type.

9. All joint sealants to be polyurethane base except as noted.

   Color of sealant where exposed in curbs, sidewalks, parapets, etc. shall be neutral (light tan or grey).
   Color shall be black under pavement. Color shall be at discretion of the Contractor on back surface of walls, etc.

10. Concrete Surface Treatment - Protective Coating shall be provided on all exposed surfaces (existing and new) to ground line on abutments, walls, and end posts; the underside of deck slab from edge of deck to fascia girder; and the outside face of parapet. The new concrete surfaces will be prepared in accordance with Concrete Surface Finising - Rubbed Regular prior to application of the protective coating. This finish will be applied only to backwalls and beam seats on South County Trail Bridge. See Special Provisions.

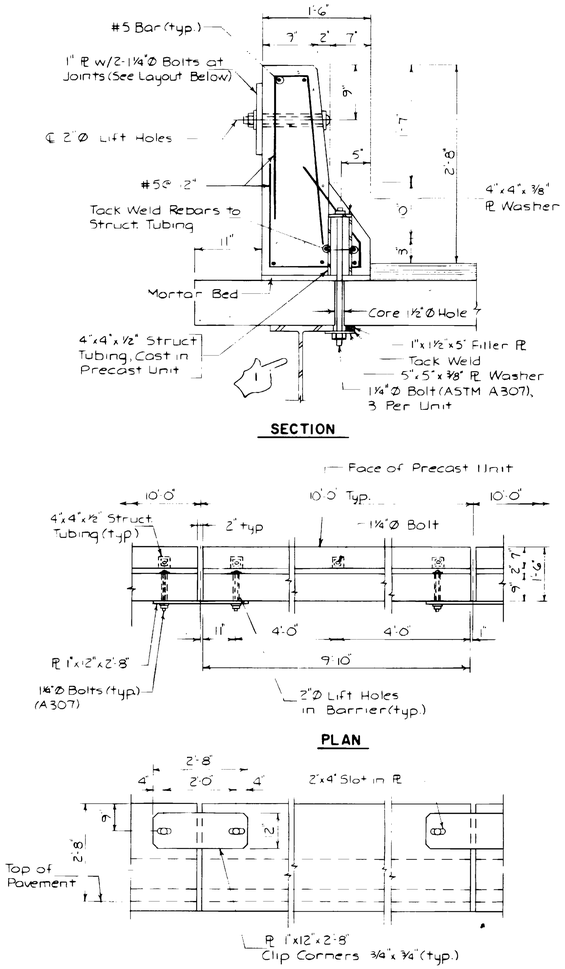

TEMPORARY PRECAST BARRIER DETAIL
N.T.S.

REVISIONS		
NO	DATE	BY
1	4-28-86	T.A.

RHODE ISLAND
DEPARTMENT OF TRANSPORTATION
DIVISION OF PUBLIC WORKS

ROUTE 4 EXTENSION

FROM STA. 53+00 TO STA. 255+00

NORTH KINGSTOWN RHODE ISLAND

LAFAYETTE R.R. BRIDGE NO. 243
CONCRETE, STEEL AND GENERAL NOTES & LIST OF QUANTITIES

CHECKED BY R.H.M. DATE JAN. 86 SCALE NONE

WATERMAN ENGINEERING CO.
CIVIL ENGINEERS
EAST PROVIDENCE RHODE ISLAND

243-002

FED ROAD DIV. NO.	STATE	FEDERAL AID PROJECT NO	FISCAL YEAR	SHEET NO	TOTAL SHEET
	R.I.			B-3	17

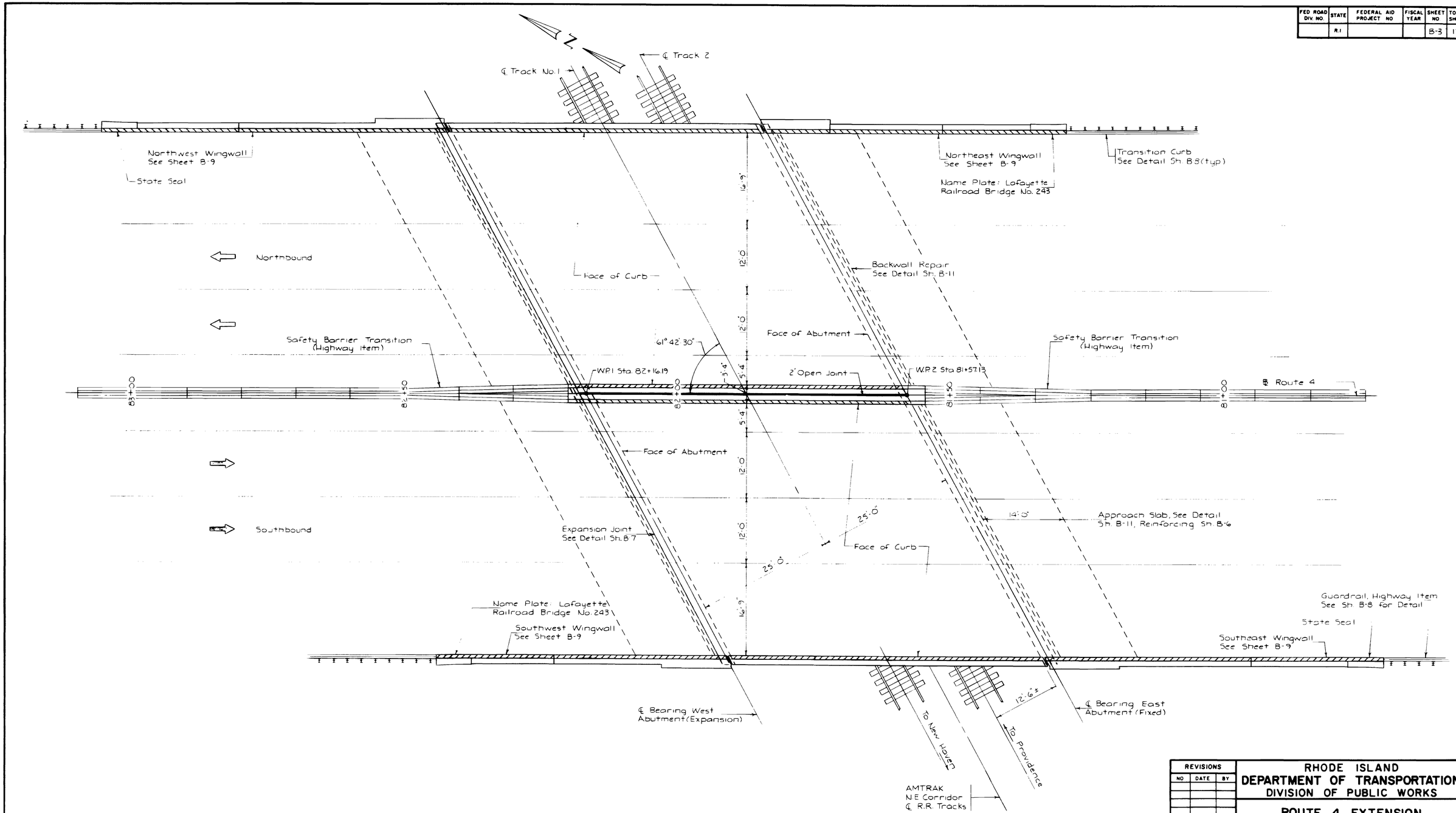

REVISIONS		
NO	DATE	BY

RHODE ISLAND
DEPARTMENT OF TRANSPORTATION
DIVISION OF PUBLIC WORKS

ROUTE 4 EXTENSION

FROM STA. 53+00 TO STA. 255+00

NORTH KINGSTOWN — RHODE ISLAND

LAFAYETTE R.R. BRIDGE NO. 243

GENERAL PLAN

CHECKED BY R.H.M. DATE JAN. 86 SCALE 1/8"=1'-0"

WATERMAN ENGINEERING CO.
CIVIL ENGINEERS
EAST PROVIDENCE — RHODE ISLAND

243-003

FED ROAD DIV NO	STATE	FEDERAL AID PROJECT NO	FISCAL YEAR	SHEET NO	TOTAL SHEET
	RI			B-4	17

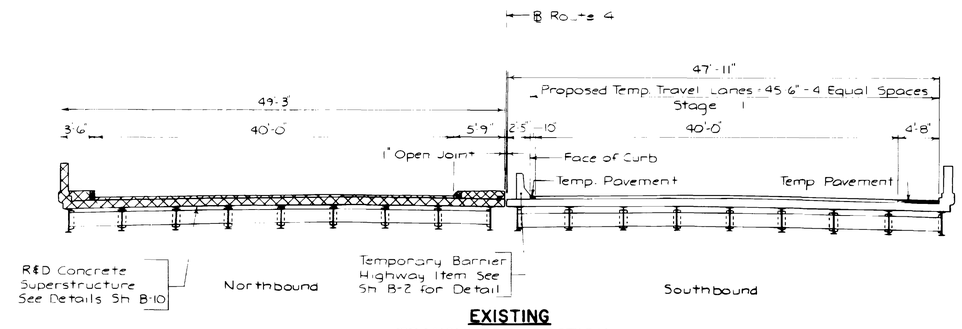

EXISTING TRANSVERSE SECTION
SCALE: 1/8" = 1'-0"

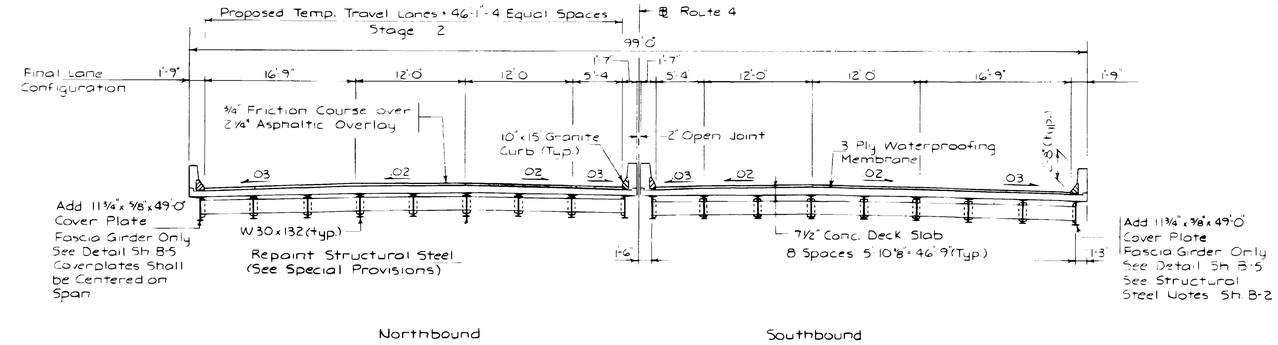

PROPOSED TRANSVERSE SECTION
SCALE: 1/8" = 1'-0"

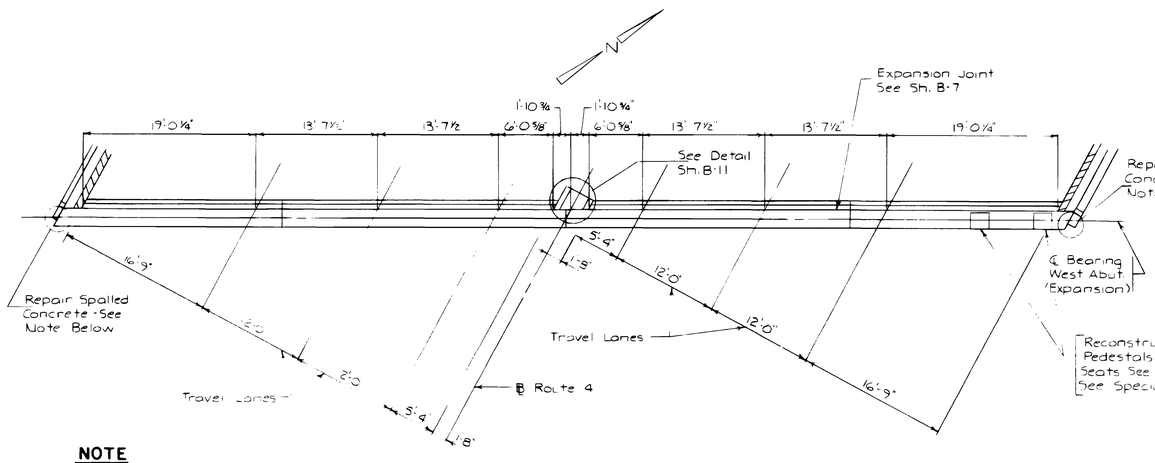

NOTE
Repair Spalled or Deteriorated Concrete on Abutment Stem. Item to be paid for under Unit bid Item for "Repairs to Structural Concrete Masonry." See Special Provisions

PLAN

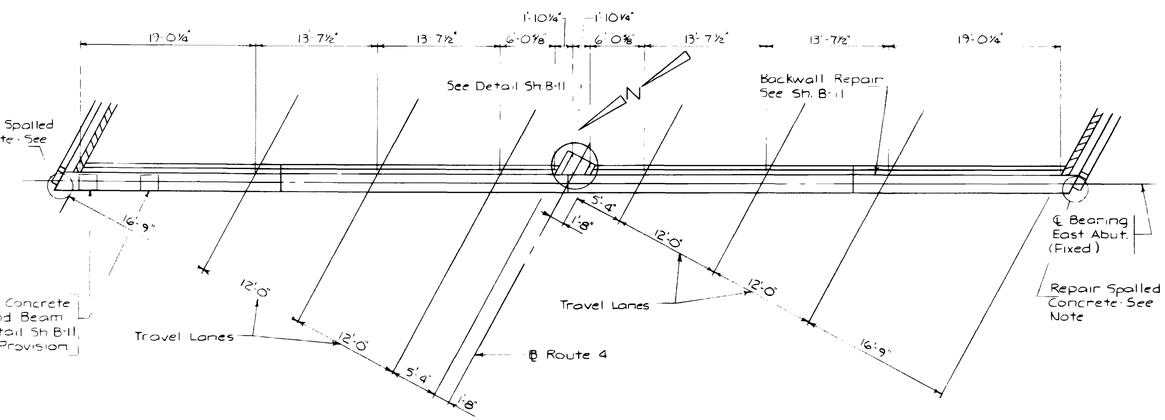

PLAN

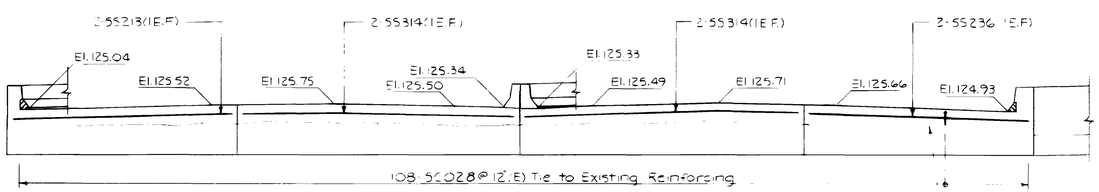

NOTE
Elevations are Finish Grade at Face of Backwall

ELEVATION

WEST ABUTMENT
SCALE: 1/8" = 1'-0"

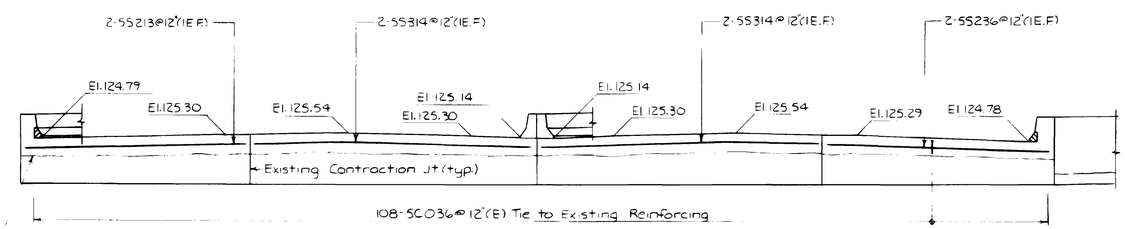

NOTE
Elevations are Top of Concrete 3' Below Finish Grade at Face of Backwall

ELEVATION

EAST ABUTMENT
SCALE: 1/8" = 1'-0"

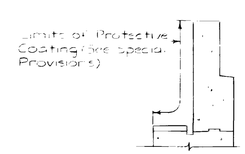

DETAIL AT BACKWALL
N.T.S.

REVISIONS		
NO	DATE	BY

RHODE ISLAND DEPARTMENT OF TRANSPORTATION
DIVISION OF PUBLIC WORKS

ROUTE 4 EXTENSION
FROM STA. 53+00 TO STA. 255+00
NORTH KINGSTOWN RHODE ISLAND

LAFAYETTE R.R. BRIDGE NO. 243
TRANSVERSE SECTIONS, PLAN & ELEVATION AT BACKWALLS

CHECKED BY R.H.M. DATE JAN. 86 SCALE AS SHOWN

WATERMAN ENGINEERING CO.
CIVIL ENGINEERS
EAST PROVIDENCE RHODE ISLAND

243-004

FED ROAD DIV NO.	STATE	FEDERAL AID PROJECT NO	FISCAL YEAR	SHEET NO	TOTAL SHEET
	R.I.			B-5	17

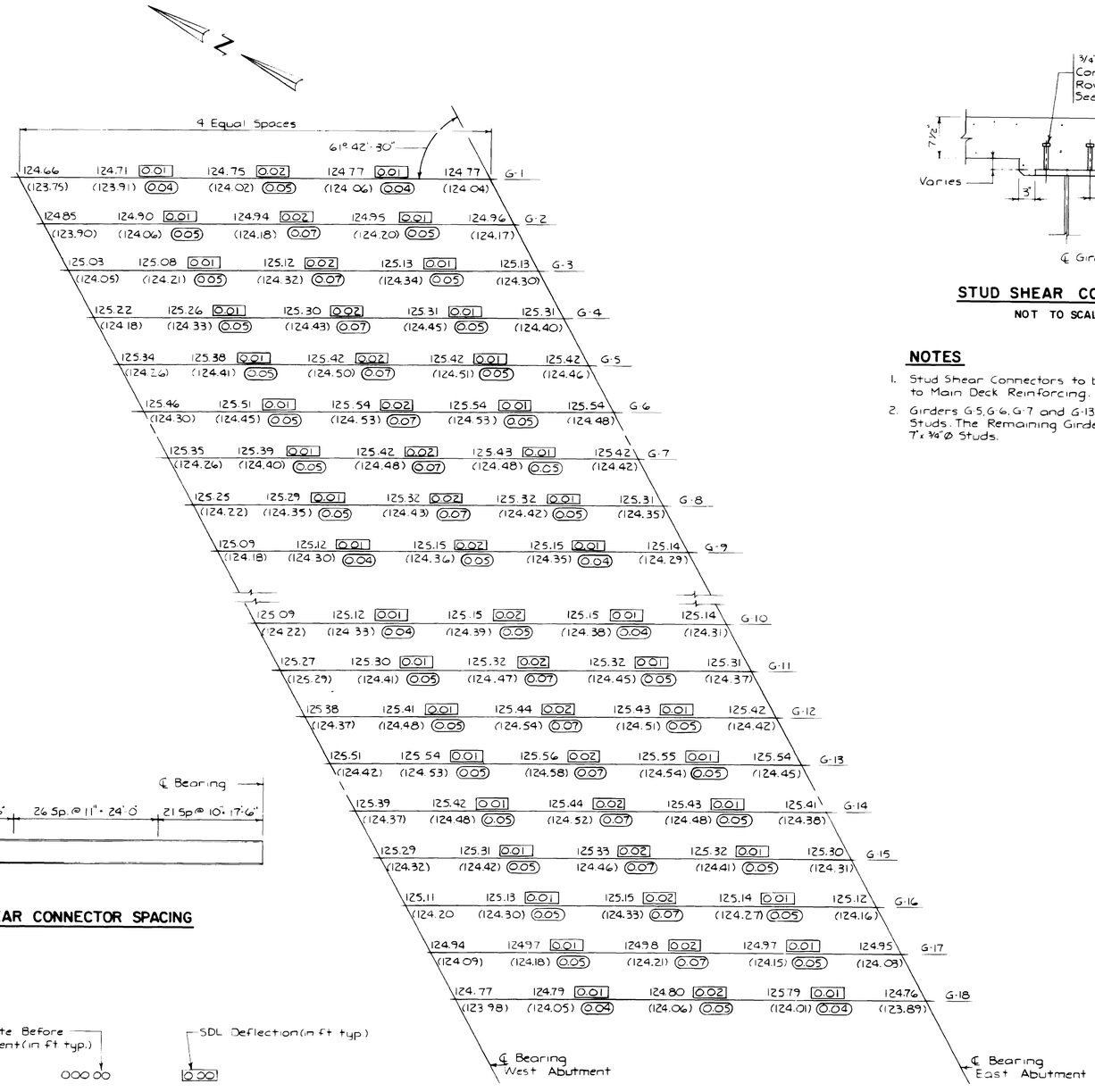

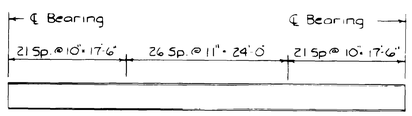

SHEAR CONNECTOR SPACING

Top of Concrete Before Placing Pavement (in ft typ.) — 000.00

(000.00)* — Top of Flange After Removing Concrete Slab

0.00 — SDL Deflection (in ft typ.)

0.00 — DL Deflection (Concrete Only)

* These Elevations Shall be Verified in Field Any Deviations are to be Reported to the Engineer before Pouring the Deck Slab or Welding the Stud Shear Connectors

DECK GRADES

SCALE: 1/8" = 1'-0"

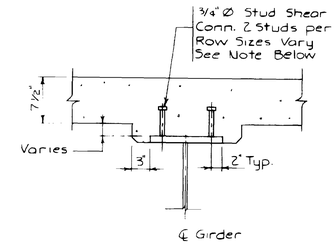

STUD SHEAR CONNECTOR

NOT TO SCALE

NOTES

1. Stud Shear Connectors to be Parallel to Main Deck Reinforcing.
2. Girders G-5, G-6, G-7 and G-13 use 8" x 3/4" Ø Studs. The Remaining Girders use 7" x 3/4" Ø Studs. (1)

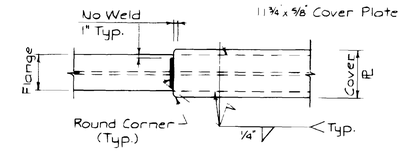

COVER PLATE DETAIL

NOT TO SCALE
(FASCIA BEAMS ONLY)

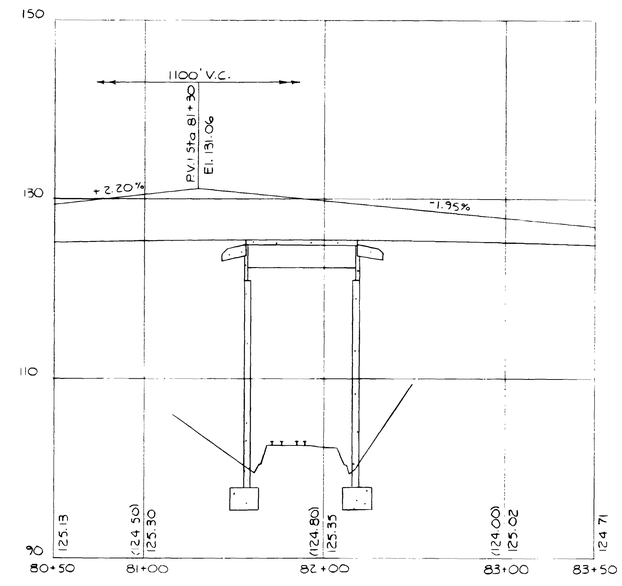

PROFILE ROUTE 4

SCALE HORIZ: 1" = 40'
VERT: 1" = 8'

Proposed 000.00
Existing (000.00)

REVISIONS		
NO	DATE	BY
1	5-1-86	T.A.

RHODE ISLAND
DEPARTMENT OF TRANSPORTATION
DIVISION OF PUBLIC WORKS

ROUTE 4 EXTENSION

FROM STA. 53+00 TO STA. 255+00

NORTH KINGSTOWN RHODE ISLAND

LAFAYETTE R.R. BRIDGE NO. 243

DECK GRADES & PROFILE

CHECKED BY R.H.M. DATE JAN. 86 SCALE AS SHOWN

WATERMAN ENGINEERING CO.
CIVIL ENGINEERS
EAST PROVIDENCE RHODE ISLAND

243-005

FED ROAD DIV NO	STATE	FEDERAL AID PROJECT NO	FISCAL YEAR	SHEET NO	TOTAL SHEET
	R.I.			B-6	17

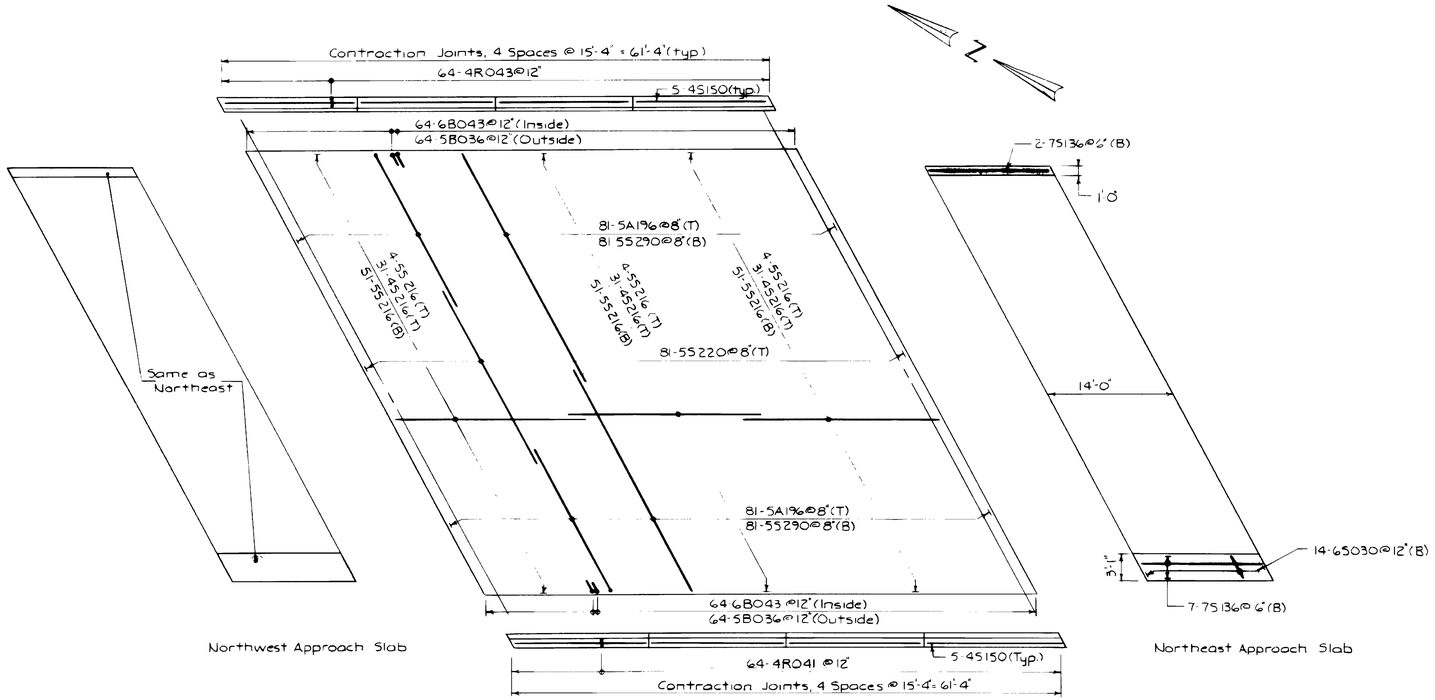

NORTHBOUND

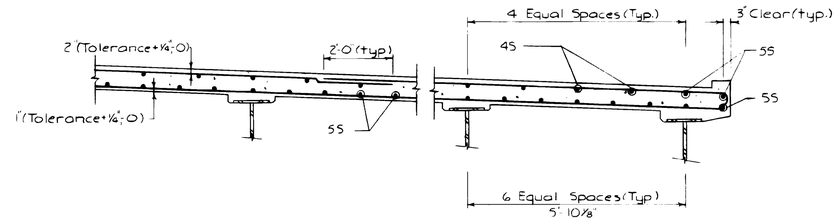

TYPICAL LONGITUDINAL REINFORCING

NOT TO SCALE

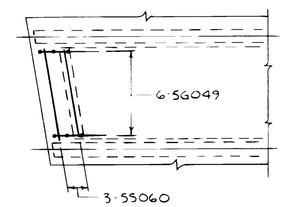

PLAN

NOT TO SCALE

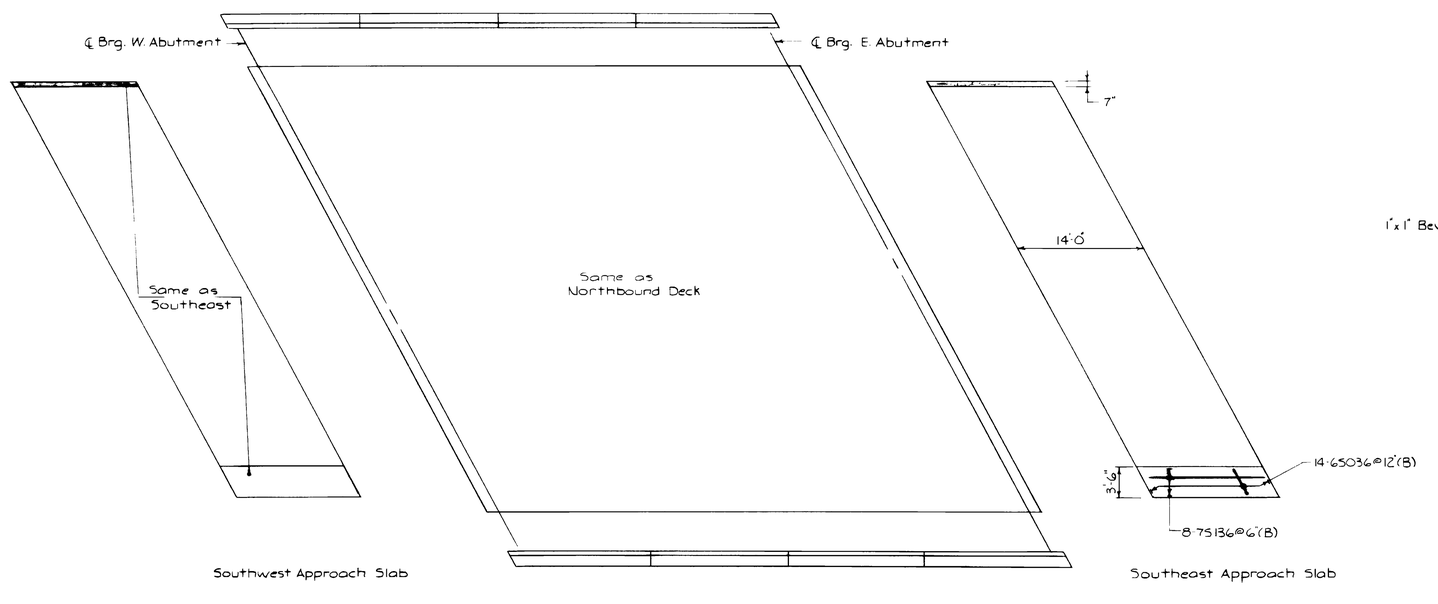

SOUTHBOUND
DECK REINFORCING PLAN

SCALE: 1/8" = 1'-0"

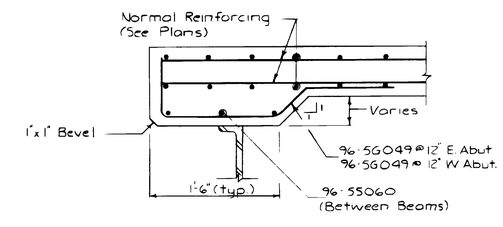

TYPICAL HAUNCH DETAIL

NOT TO SCALE

NOTES

1. Contraction Joint Spacing in Parapet Measured Along Face of Curb.
2. See Special Provisions for Placement of Deck Concrete.

REVISIONS		
NO	DATE	BY

RHODE ISLAND
DEPARTMENT OF TRANSPORTATION
DIVISION OF PUBLIC WORKS

ROUTE 4 EXTENSION

FROM STA. 53+00 TO STA. 255+00

NORTH KINGSTOWN — RHODE ISLAND

LAFAYETTE R.R. BRIDGE NO. 243

PARAPET & DECK REINFORCING

WATERMAN ENGINEERING CO.
CIVIL ENGINEERS
EAST PROVIDENCE — RHODE ISLAND

CHECKED BY R.H.M. DATE JAN. 86 SCALE AS SHOWN

243-006

FED ROAD DIV NO	STATE	FEDERAL AID PROJECT NO	FISCAL YEAR	SHEET NO	TOTAL SHEET
1	RI			B-7	17

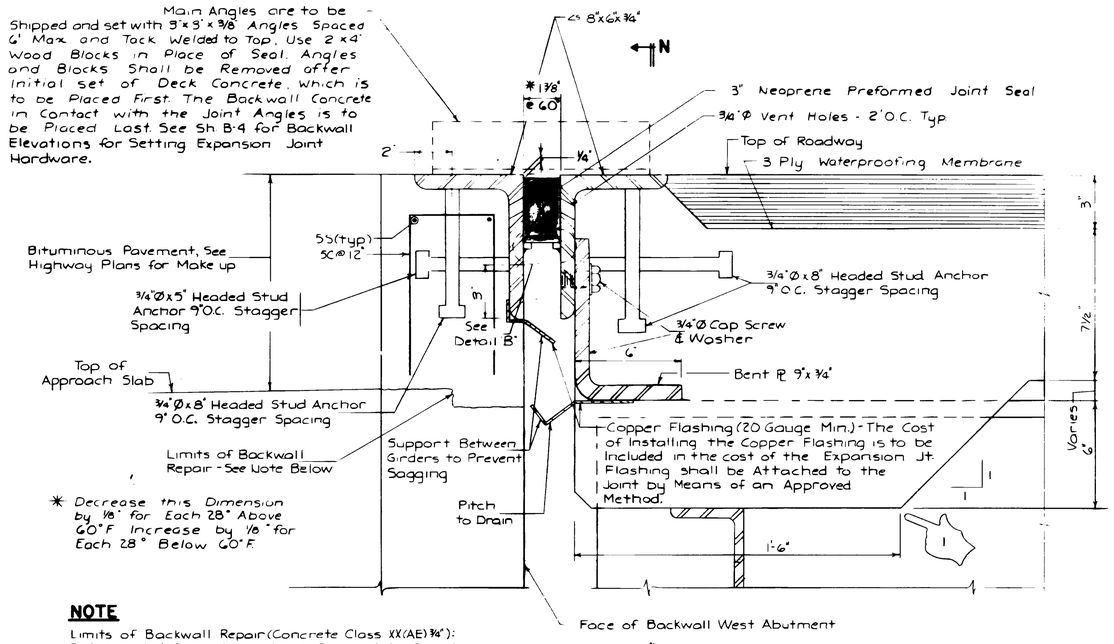

* Decrease this Dimension by 1/8" for Each 28° Above 60°F Increase by 1/8" for Each 28° Below 60°F.

NOTE

Limits of Backwall Repair (Concrete Class XX(AE)3/4"): Deteriorated Concrete shall be Removed to Sound Concrete. Before Pouring Concrete the Existing Rebars to Remain shall be Clean and Free of Rust and all Damaged or Corroded Rebars will be Replaced as Required. Payment for this work is included in the Lump Sum Substructure R&D Items and Lump Sum Substructure Items for Lafayette Railroad Bridge No. 243.

PROPOSED EXPANSION JOINT (SECTION P-P)

NOT TO SCALE

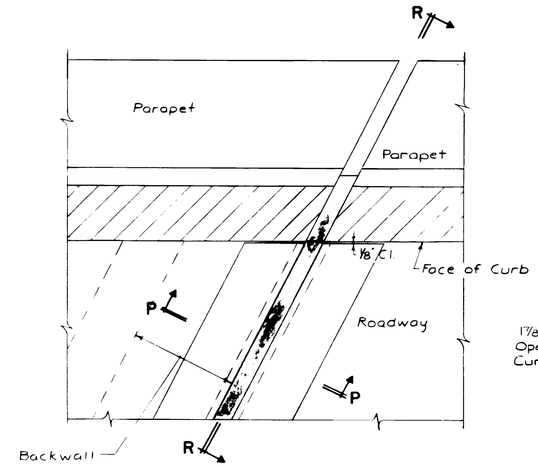

PLAN

SCALE: 1 1/2" = 1'-0"

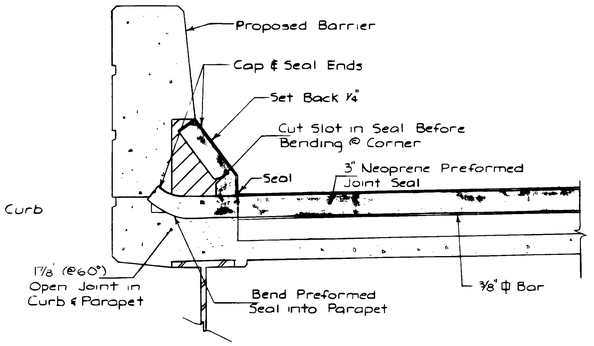

SECTION R-R

SCALE: 1" = 1'-0"

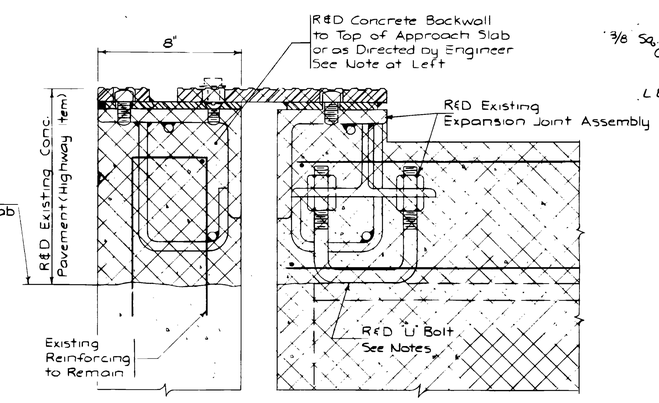

EXISTING EXPANSION JOINT

SCALE: 3" = 1'-0"

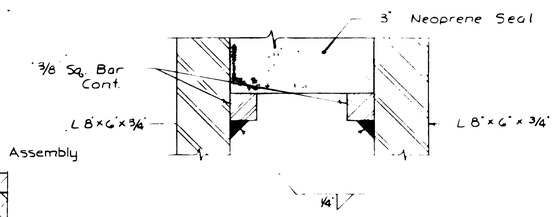

DETAIL B

FULL SIZE

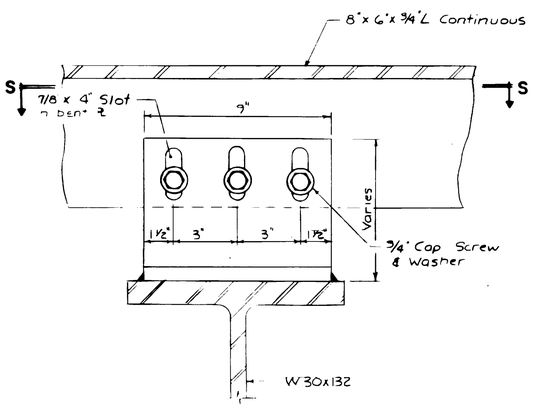

SECTION N-N

N.T.S.

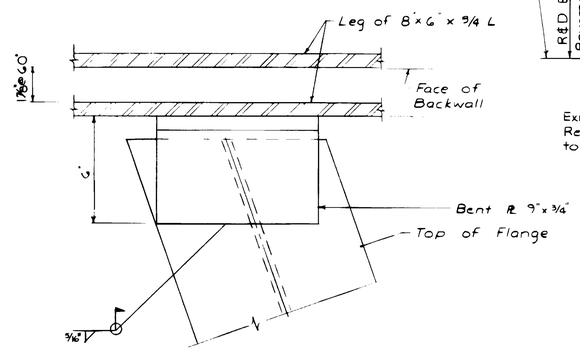

SECTION S-S

SCALE: 3" = 1'-0"

Dimensions Not Given And Shape Variations Must Have Approval of the Engineer

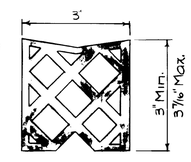

3" NEOPRENE PREFORMED JOINT SEAL SHAPE

NOT TO SCALE

NOTES

1. Entire Unit to be Assembled, Erected and set to Grade Before Pouring Concrete.
2. All Material to be Galvanized.
3. All Structural Shapes Shall Conform to A.S.T.M. Designation A-36.
4. Headed Stud Anchors Shall be Welded by Electric Arc Stud Welding Process in Accordance with Latest A.W.S. Specifications.
5. Remove and Dispose Existing Expansion Joint Hardware. Care Shall be Taken as not to Damage Steel Beam. Top of Flange will be Ground Smooth to Allow Proper Seating of Bent Plate.

REVISIONS		
NO	DATE	BY
1	5-1-86	T.A.

RHODE ISLAND
DEPARTMENT OF TRANSPORTATION
DIVISION OF PUBLIC WORKS

ROUTE 4 EXTENSION

FROM STA. 53+00 TO STA. 255+00

NORTH KINGSTOWN — RHODE ISLAND

LAFAYETTE R.R. BRIDGE NO. 243
EXPANSION JOINT DETAILS

CHECKED BY R.H.M. DATE JAN. 86 SCALE AS SHOWN

WATERMAN ENGINEERING CO.
CIVIL ENGINEERS
EAST PROVIDENCE — RHODE ISLAND

243-007

FED. ROAD DIV NO.	STATE	FEDERAL AID PROJECT NO.	FISCAL YEAR	SHEET NO	TOTAL SHEET
	R.I.			B-8	17

Limits of R&D

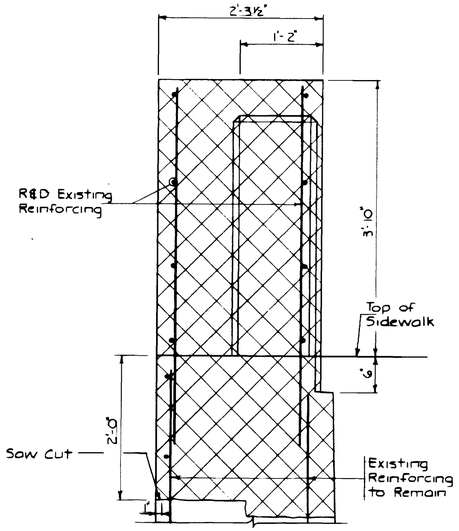

EXISTING PYLON
SCALE: 1" = 1'-0"

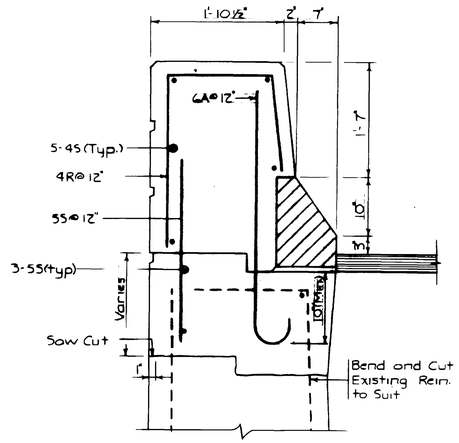

PROPOSED SECTION AT PYLON
SCALE: 1" = 1'-0"

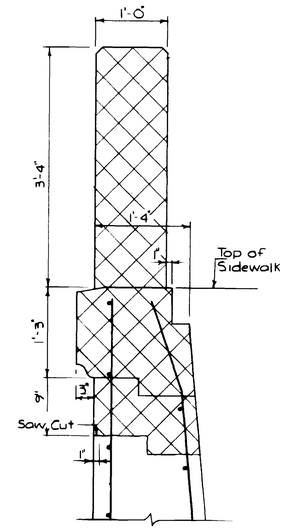

EXISTING WALL WITH CONCRETE RAILING
SCALE: 1" = 1'-0"

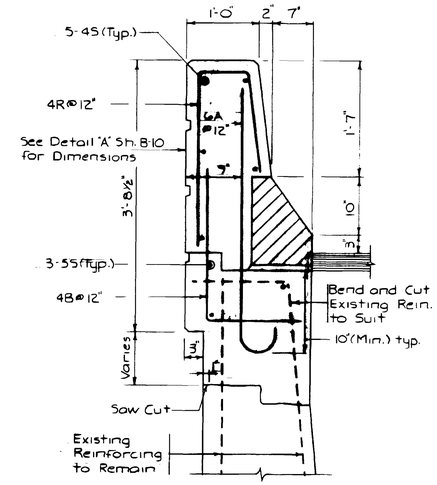

PROPOSED SAFETY PARAPET
SCALE: 1" = 1'-0"

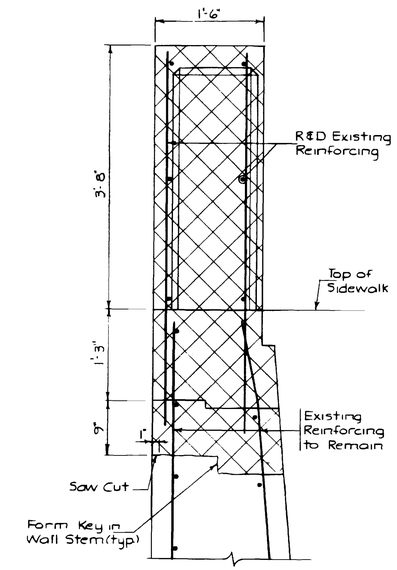

EXISTING END POST
SCALE: 1" = 1'-0"

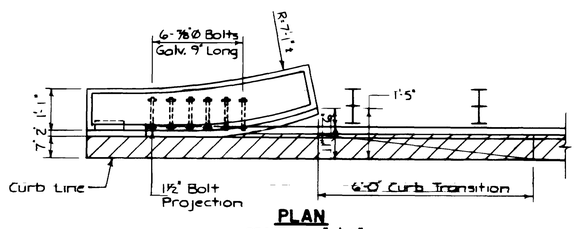

PLAN
SCALE: 1/2" = 1'-0"

NOTES

1. The ⅞"Ø Bolts, Nuts & ¼ PL's Shall be Included in the Cost of Bridge Substructure Concrete.
2. All Other Items Related to the Metal Beam Guardrail Connection (PL Washers, Standard Metal Beam Rails, etc.) Shall be Paid for Under Highway Item "Metal Beam Guardrail"

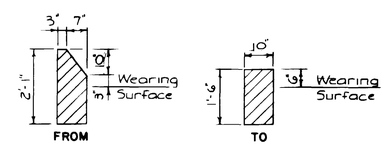

SLOPE FACE TRANSITION CURB

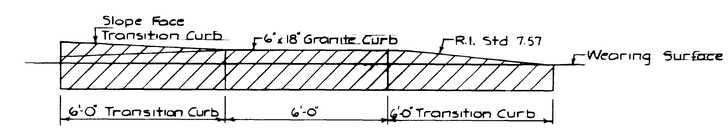

CURB DETAIL
N.T.S.

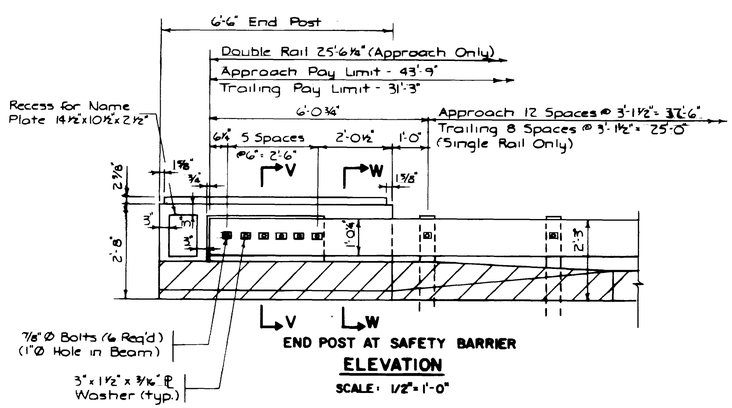

END POST AT SAFETY BARRIER
ELEVATION
SCALE: 1/2" = 1'-0"

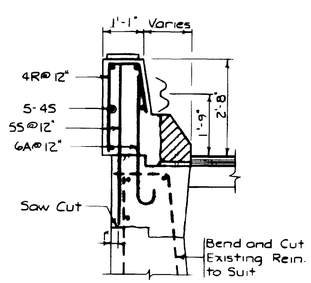

SECTION W-W
SCALE: 1/2" = 1'-0"

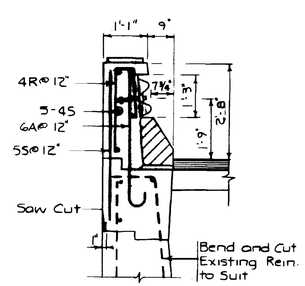

SECTION V-V
SCALE: 1/2" = 1'-0"

NOTES

3. Any Damaged or Corroded Reinforcing Bars shall be Replaced as Directed by the Engineer. The Reinforcing bars shall be included in the Cost of Bridge Substructure Concrete.
4. See Sheet B-9 for Limits of Pylons, Parapets and End Posts.

REVISIONS		
NO	DATE	BY

RHODE ISLAND
DEPARTMENT OF TRANSPORTATION
DIVISION OF PUBLIC WORKS

ROUTE 4 EXTENSION

FROM STA. 53 00 TO STA. 255 00

NORTH KINGSTOWN — RHODE ISLAND

LAFAYETTE R.R. BRIDGE NO. 243
PARAPET SECTIONS & CURB DETAILS

WATERMAN ENGINEERING CO.
CIVIL ENGINEERS
EAST PROVIDENCE — RHODE ISLAND

CHECKED BY R.H.M. DATE JAN. 86 SCALE AS SHOWN

243-008

FED. ROAD DIV. NO.	STATE	FEDERAL AID PROJECT NO.	FISCAL YEAR	SHEET NO	TOTAL SHEET
	R.I.			B-9	17

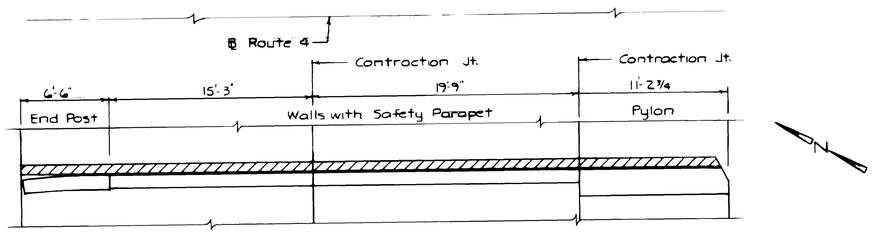

SOUTHWEST WINGWALL PLAN

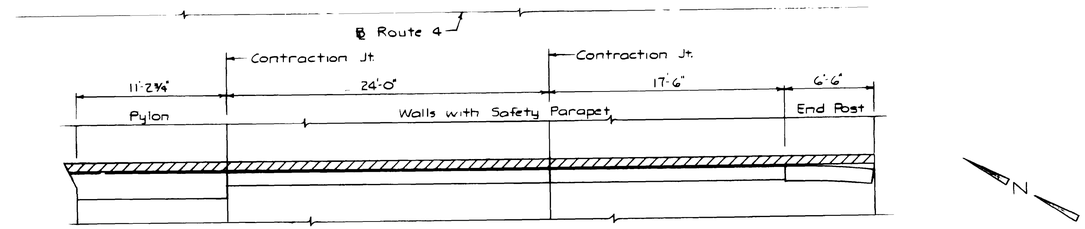

SOUTHEAST WINGWALL PLAN

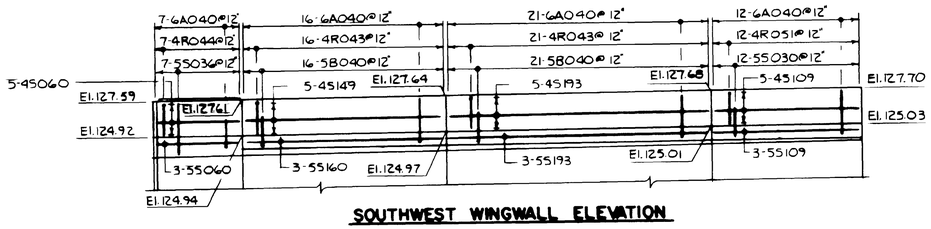

SOUTHWEST WINGWALL ELEVATION

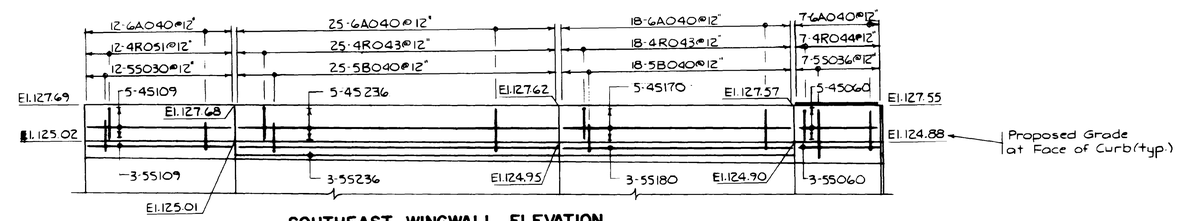

SOUTHEAST WINGWALL ELEVATION

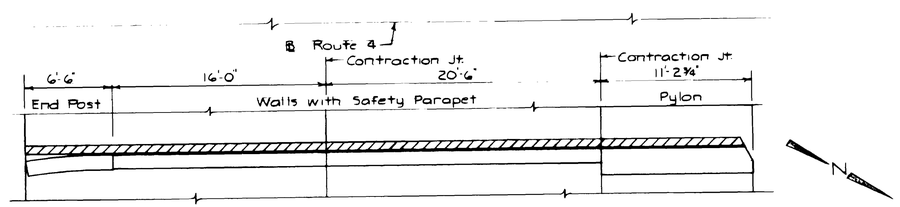

NORTHEAST WINGWALL PLAN

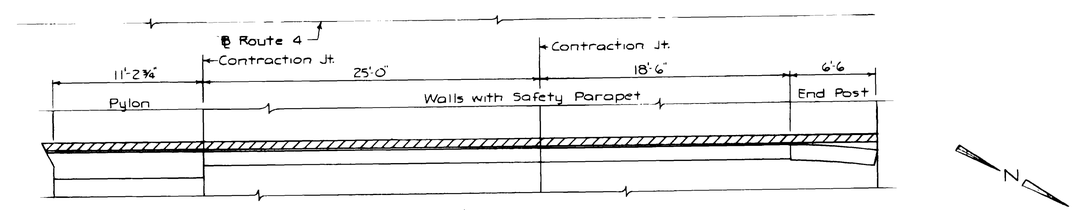

NORTHWEST WINGWALL PLAN

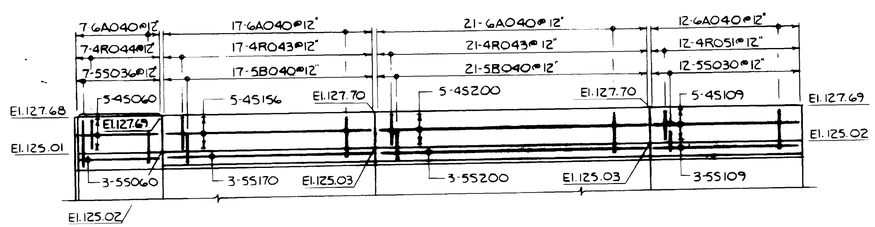

NORTHEAST WINGWALL ELEVATION

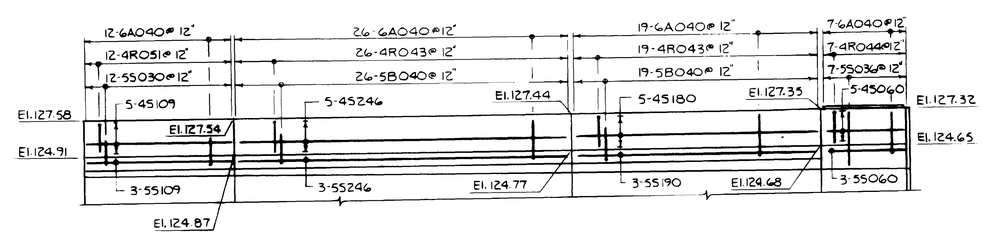

NORTHWEST WINGWALL ELEVATION

NOTES

1. See Sh. B-8 for Details of Existing and New Sections at Pylon, Wall Parapet and End Posts
2. See Detail 'A' Sh B-10 for Dimensions at Safety Parapet.

WATERMAN ENGINEERING CO.
CIVIL ENGINEERS
EAST PROVIDENCE RHODE ISLAND

REVISIONS		
NO	DATE	BY

RHODE ISLAND
DEPARTMENT OF TRANSPORTATION
DIVISION OF PUBLIC WORKS

ROUTE 4 EXTENSION

FROM STA. 53+00 TO STA. 255+00

NORTH KINGSTOWN RHODE ISLAND

LAFAYETTE R.R. BRIDGE NO. 243
WINGWALL PLANS & ELEVATIONS

CHECKED BY R.H.M. DATE JAN. 86 SCALE 3/16"=1'-0"

243-009

FED. ROAD DIV. NO.	STATE	FEDERAL AID PROJECT NO.	FISCAL YEAR	SHEET NO	TOTAL SHEET
	R.I.			B-10	17

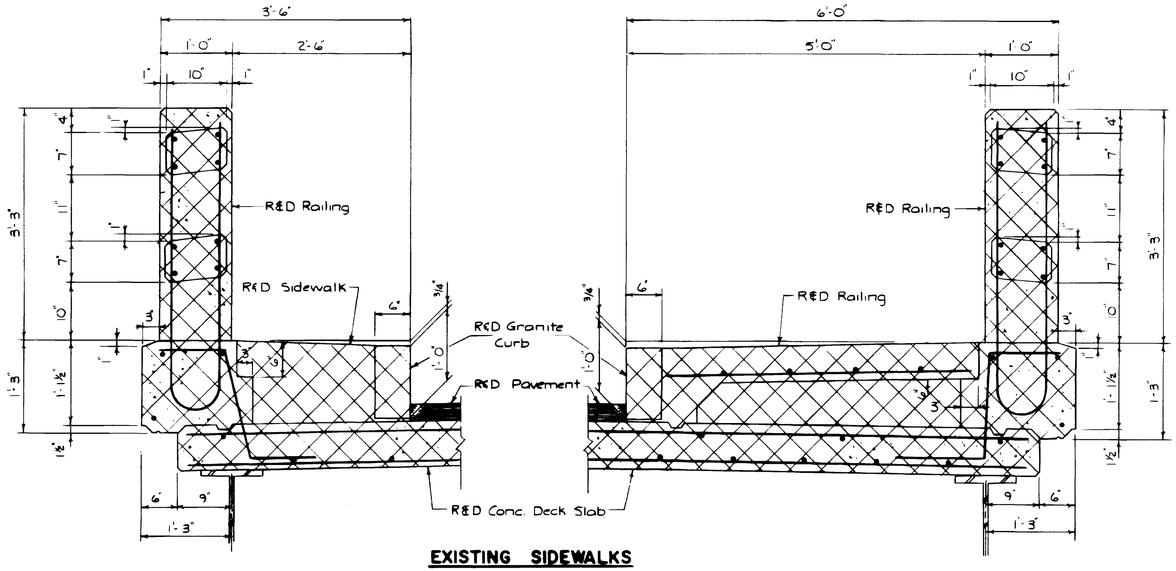

EXISTING SIDEWALKS
SCALE: 1"=1'-0"

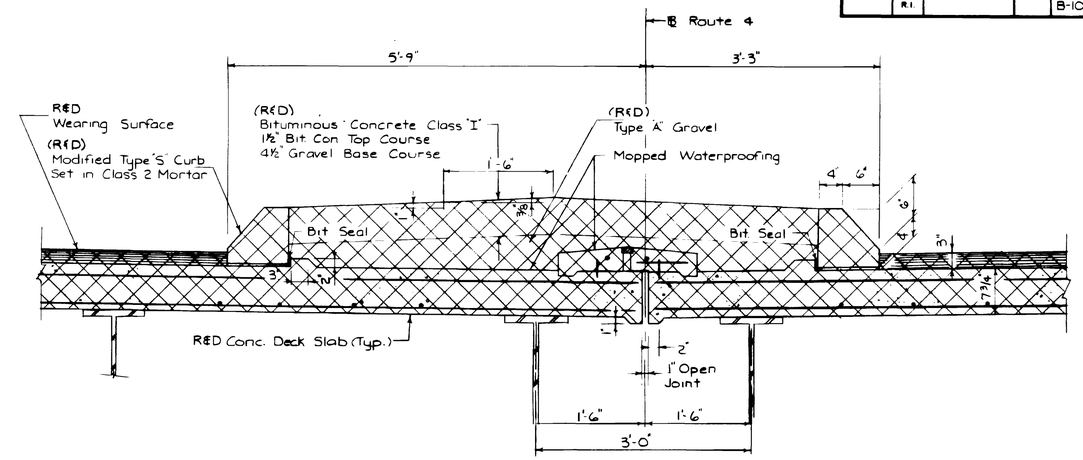

EXISTING MEDIAN
SCALE: 1"=1'-0"

R&D Limits

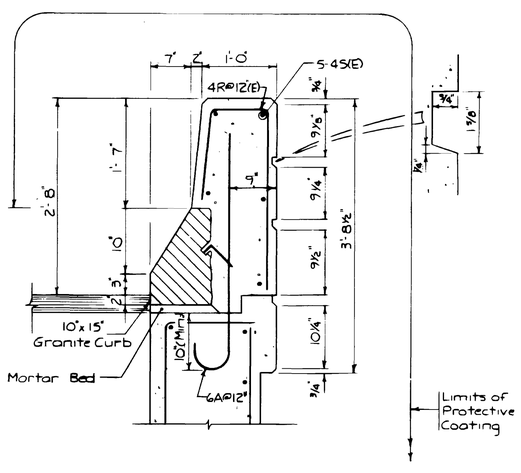

DETAIL "A"
SCALE: 1"=1'-0"

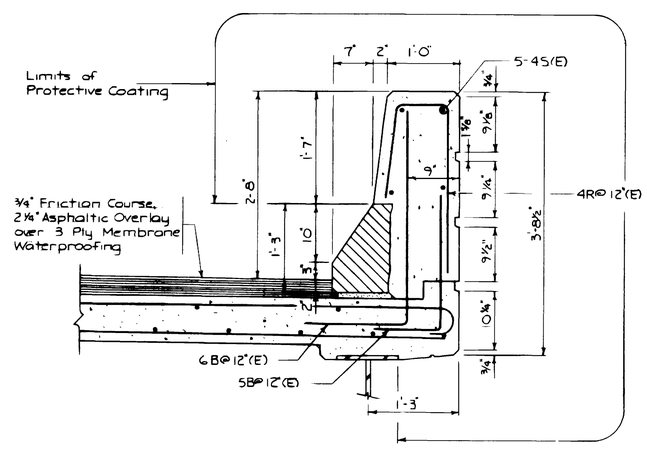

SECTION THRU PROPOSED BARRIER PARAPET
SCALE: 1"=1'-0"

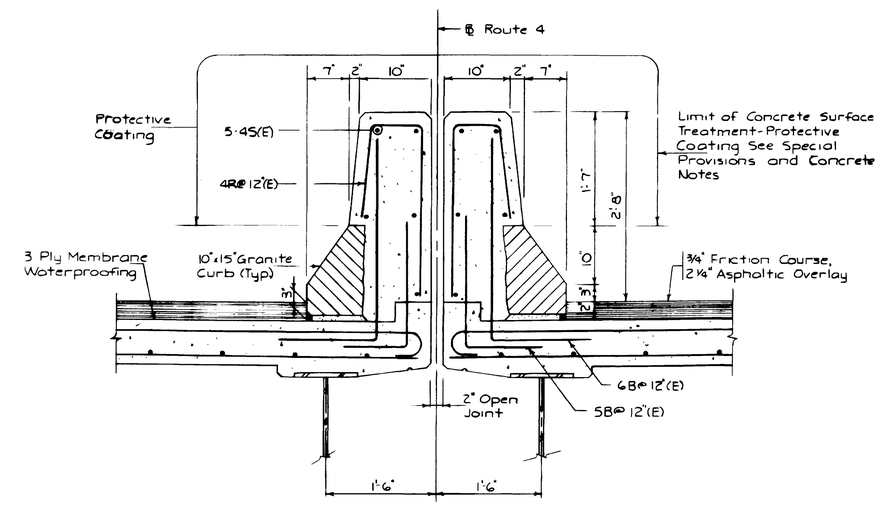

SECTION THRU PROPOSED MEDIAN
SCALE: 1"=1'-0"

REVISIONS		
NO.	DATE	BY

RHODE ISLAND
DEPARTMENT OF TRANSPORTATION
DIVISION OF PUBLIC WORKS

ROUTE 4 EXTENSION

FROM STA. 53+00 TO STA. 255+00

NORTH KINGSTOWN RHODE ISLAND

LAFAYETTE R.R. BRIDGE NO. 243

MISCELLANEOUS DETAILS 1 OF 2

WATERMAN ENGINEERING CO.
CIVIL ENGINEERS
EAST PROVIDENCE RHODE ISLAND

CHECKED BY R.H.M. DATE JAN. 86 SCALE AS SHOWN

243-010

FED. ROAD DIV. NO.	STATE	FEDERAL AID PROJECT NO	FISCAL YEAR	SHEET NO.	TOTAL SHEET
	R.I.			B-11	17

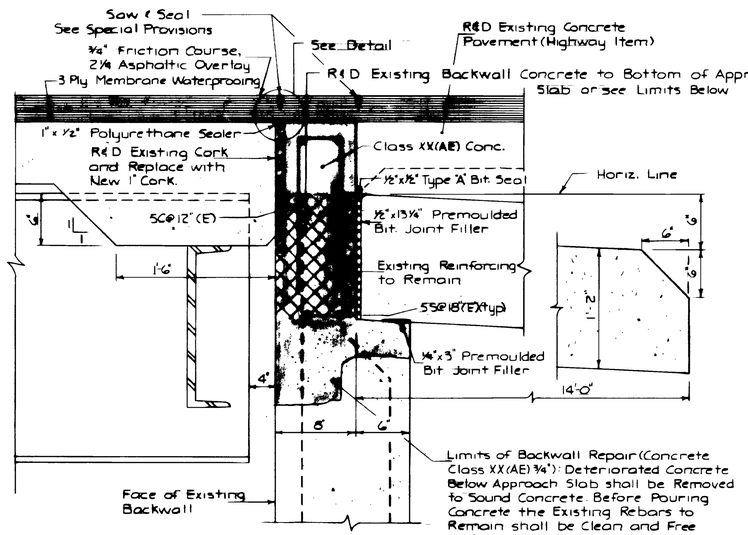

PROPOSED BACKWALL
SCALE: 1-1/2" = 1'-0"

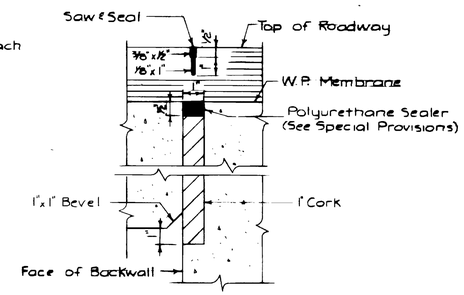

SAW & SEAL DETAIL
NOT TO SCALE

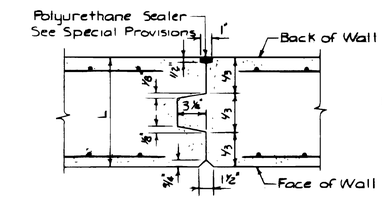

VERTICAL CONTRACTION JOINT
NOT TO SCALE

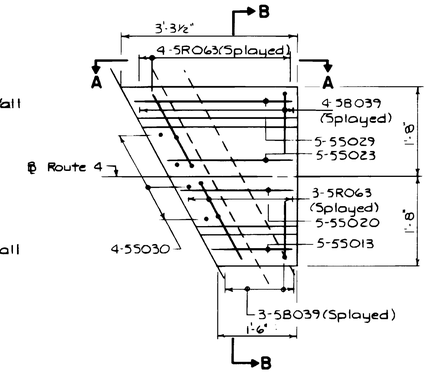

PLAN AT CAST IN PLACE MEDIAN BARRIER
N.T.S.

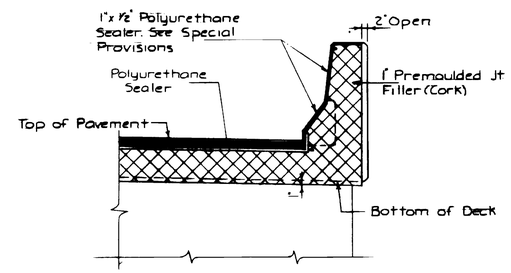

SECTION THRU BARRIER AT FIXED JOINT
NOT TO SCALE

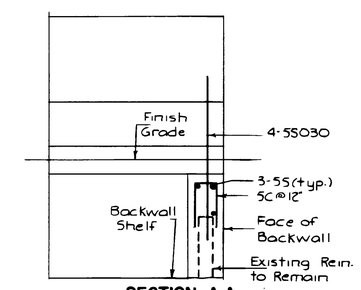

SECTION A-A
N.T.S.

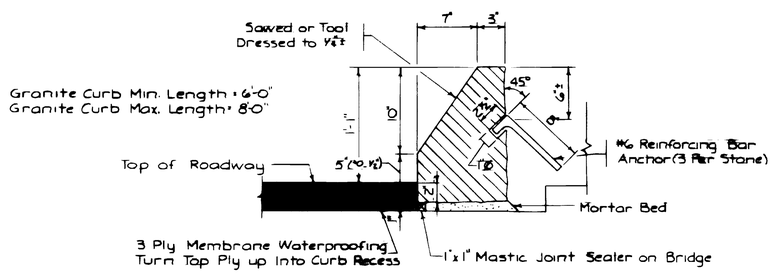

(10" X 15") SLOPE FACE GRANITE CURB
SCALE: 1-1/2" = 1'-0"

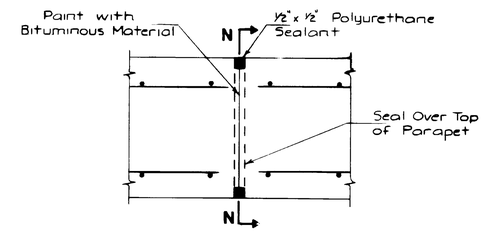

CONTRACTION JOINT IN PARAPET
NOT TO SCALE

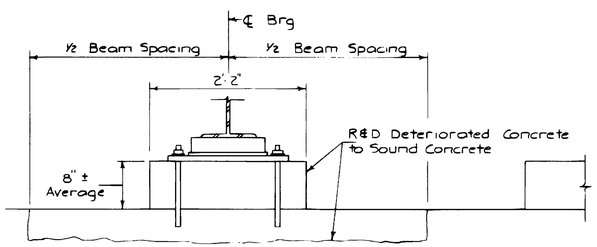

LIMITS OF PEDESTAL AND BEAM SEAT RECONSTRUCTION
N.T.S.

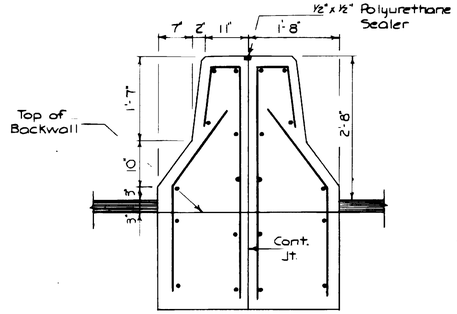

SECTION B-B
N.T.S.

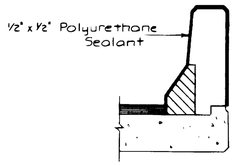

SECTION N-N
SCALE: 1/2" = 1'-0"

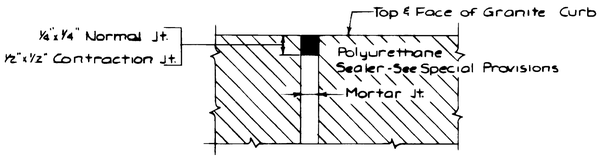

CURB JOINT DETAIL
NOT TO SCALE

NOTES

1. Parapet Joint Spacing is Measured Along Face of Curb.
2. For Detail of Expansion Joints See Sh. B-7.
3. It shall be the Contractors Responsibility to Furnish Granite Curb of Sufficient Length so that it can be cut to Length in the Field if Necessary.

NOTE

The Bearing Pedestals (and Beam Seats) for the Following Girders are Included in this Work (See Deck Grade Sheet B-5 for Orientation of Steel Girders and Abutment):

East Abutment - G-1, G-2, G-4, G-6, G-7, G-8, G-9, G-11, G-12, G-13 G-14, G-15, G-16, G-17, G-18.

West Abutment - G-1, G-10, G-11, G-14, G-17, G-18

WATERMAN ENGINEERING CO.
CIVIL ENGINEERS
EAST PROVIDENCE RHODE ISLAND

REVISIONS		
NO	DATE	BY

RHODE ISLAND DEPARTMENT OF TRANSPORTATION
DIVISION OF PUBLIC WORKS

ROUTE 4 EXTENSION
FROM STA. 53+00 TO STA. 255+00
NORTH KINGSTOWN RHODE ISLAND

LAFAYETTE R.R. BRIDGE NO. 243
MISCELLANEOUS DETAILS 2 OF 2

CHECKED BY R.H.M. DATE JAN. 86 SCALE AS SHOWN

243-011

FED. ROAD DIV. NO.	STATE	FEDERAL AID PROJECT NO.	FISCAL YEAR	SHEET NO.	TOTAL SHEET
	R.I.			B-12	17

Nº	SIZE	TYPE	LENGTH FT.	LENGTH IN.	A	B	C	D	E	F	G	H	K	R	O	REMARKS
	Substructure															
	West Abutment															
	Backwall															
4	5	S	31	4												
2	↓	↓	23	6												
2			21	3												
108	5	C	2	8	1'-2"	1'-2"									0'-4"	
	Northwest Wingwall															
	Pylon Stem															
12	6	A	4	0	0'-8"										3'-4"	
4	5	S	10	9												2 Test Bars
12	5	S	3	0												
	Parapet															
5	4	S	10	9												
12	4	R	5	1		2'-4"	1'-6"	1'-3"				0'-2"				
	Section 1															
	Stem															
26	6	A	4	0	0'-8"										3'-4"	
3	5	S	24	6												
26	5	B	4	0		1'-3"									2'-9"	
	Parapet															
5	4	S	24	6												
26	4	R	4	3		2'-4"	0'-8"	1'-3"				0'-2"				
	Section 2															
	Stem															
20	6	A	4	0												1 Test Bar
3	5	S	19	0												
19	5	B	4	0		1'-3"									2'-9"	
	Parapet															
6	4	S	18	0												2 Test Bars
19	4	R	4	3		2-4	0'-8"	1'-3"				0'-2"				
	End Post															
	Stem															
7	6	A	4	0	0'-8"										3'-4"	
3	5	S	6	0												
7	5	S	3	6												
	Parapet															
5	4	S	6	0												
7	4	R	4	4		2'-4"	0'-9"	1'-3"				0'-2"				
	Southwest Wingwall															
	Pylon Stem															
12	6	A	4	0	0'-8"										3'-4"	
3	5	S	10	9												
12	5	S	3	0												
	Parapet															
5	4	S	10	9												
12	4	R	5	1		2'-4"	1'-6"	1'-3"				0'-2"				
	Section 1															
	Stem															
22	6	A	4	0	0'-8"										3'-4"	1 Test Bar

Nº	SIZE	TYPE	LENGTH FT.	LENGTH IN.	A	B	C	D	E	F	G	H	K	R	O	REMARKS
	Section 1 (Con't)															
3	5	S	19	3												
21	5	B	4	0		1'-3"									2'-9"	
	Parapet															
5	4	S	19	3												
21	4	R	4	3		2'-4"	0'-8"	1'-3"				0'-2"				
	Section 2															
	Stem															
16	6	A	4	0	0'-8"										3'-4"	
3	5	S	14	9												
16	5	B	4	0		1'-3"									2'-9"	
	Parapet															
5	4	S	16	0												
16	4	R	4	3		2'-4"	0'-8"	1'-3"				0'-2"				
	End Post															
	Stem															
7	6	A	4	0	0'-8"										3'-4"	
3	5	S	6	0												
7	5	S	3	6												
	Parapet															
5	4	S	6	0												
7	4	R	4	4		2'-4"	0'-9"	1'-3"				0'-2				
	East Abutment															
	Backwall															
4	5	S	31	4												
2	↓	↓	23	6												
2			21	3												
108	5	C	3	6	1'-7"	1'-7"									0'-4"	
	Northeast Wingwall															
	Pylon Stem															
12	6	A	4	0	0'-8"										3'-4"	
3	5	S	10	9												
12	5	S	3	0												
	Parapet															
5	4	S	10	9												
12	4	R	5	1		2'-4"	1'-6"	1'-3"				0'-2"				
	Section 1															
	Stem															
21	6	A	4	0	0'-8"										3'-4"	
3	5	S	20	0												
21	5	B	4	0		1'-3"									2'-9"	
	Parapet															
5	4	S	20	0												
21	4	R	4	3		2'-4"	0'-8"	1'-3"				0'-2"				
	Section 2															
	Stem															
17	6	A	4	0	0'-8"										3'-4"	
3	5	S	17	0												

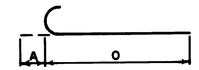

TYPE A

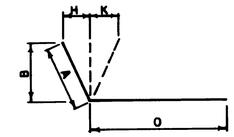

TYPE B

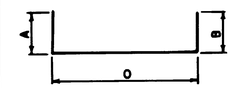

TYPE C

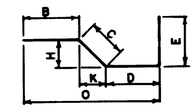

TYPE G

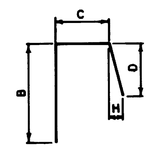

TYPE R

NOTE

"The bar schedules and bending diagrams shown on the plans are furnished for informational purposes only, and the State does not assume responsibility for their accuracy. The Contractor's bar fabricator shall verify the correctness in preparing his order lists and bending diagrams. Any expense incident to revision of material as shown on the bar schedules and bending diagrams in order to make it comply with the design drawings shall be borne by the Contractor."

REVISIONS		
NO.	DATE	BY

RHODE ISLAND
DEPARTMENT OF TRANSPORTATION
DIVISION OF PUBLIC WORKS

ROUTE 4 EXTENSION

FROM STA. 53+00 TO STA. 255+00

NORTH KINGSTOWN — RHODE ISLAND

LAFAYETTE R.R. BRIDGE NO. 243

REINFORCING SCHEDULE 1 OF 2

CHECKED BY R.H.M. DATE JAN. 86 SCALE-NONE

243-012

FED. ROAD DIV. NO.	STATE	FEDERAL AID PROJECT NO.	FISCAL YEAR	SHEET NO.	TOTAL SHEET
	R. I.			B-13	17

No.	SIZE	TYPE	LENGTH FT.	LENGTH IN.	A	B	C	D	E	F	G	H	K	R	O	REMARKS
	Northeast Wingwall															
	Section 2 Stem															
17	5	B	4	0		1'-3"									2'-9"	
	Parapet															
5	4	S	15	6												
17	4	R	4	3		2'-4"	0'-8"	1'-3"				0'-2"				
	End Post															
	Stem															
7	6	A	4	0	0'-8"										3'-4"	
7	5	S	3	6												
3	5	S	6	0												
	Parapet															
5	4	S	6	0												
7	4	R	4	4		2'-4"	0'-9"	1'-3"				0'-2"				
	Southeast Wingwall															
	Pylon Stem															
12	6	A	4	0	0'-8"										3'-4"	
3	5	S	10	9												
12	5	S	3	0												
	Parapet															
5	4	S	10	9												
12	4	R	5	1		2'-4"	1'-6"	1'-3"				0'-2"				
	Section 1 Stem															
25	6	A	4	0	0'-8"										3'-4"	
3	5	S	23	6												
25	5	B	4	0		1'-3"									2'-9"	
	Parapet															
5	4	S	23	6												
25	4	R	4	3		2'-4"	0'-8"	1'-3"				0'-2"				
	Section 2 Stem															
18	6	A	4	0	0'-8"										3'-4"	
3	5	S	18	0												
18	5	B	4	0		1'-3"									2'-9"	
	Parapet															
5	4	S	18	0												
18	4	R	4	3		2'-4"	0'-8"	1'-3"				0'-2"				
	End Post Stem															
7	6	A	4	0	0'-8"										3'-4"	
7	5	S	3	6												
3	5	S	6	0												
	Parapet															
5	4	S	6	0												
7	4	R	4	4		2'-4"	0'-9"	1'-3"				0'-2"				
	Northwest															
	Approach Slab															
9	7	S	13	6												
14	6	S	3	0												
	Southwest															
	Approach Slab															
8	7	S	13	6												
14	6	S	3	6												
	Northeast															
	Approach Slab															
9	7	S	13	6												
14	6	S	3	0												
	Southeast															
	Approach Slab															
8	7	S	13	6												
14	6	S	3	6												
	Median Barrier West Abutment															
	Stem															
7	5	B	3	9		1'-9"								1'-0"	2'-0"	
7	5	R	6	3		4'-4"	0'-8"	1'-3"				0'-2"				

No.	SIZE	TYPE	LENGTH FT.	LENGTH IN.	A	B	C	D	E	F	G	H	K	R	O	REMARKS
	Median Barrier															
	Stem (Con't)															
4	5	S	3	0												
2	↓	↓	2	9												
2			2	3												
2			2	0												
2			1	3												
	Parapet															
3	5	S	2	9												
3	↓	↓	2	3												
3			2	0												
3			1	3												
	Median Barrier East Abutment															
	Stem															
	Same as West Abutment															
	Parapet															
	Same as West Abutment															
	Superstructure															
	Northbound															
	Deck Slab															
129	6	B	4	3		1'-0"									3'-3"	1 Test Bar
162	5	S	29	0												
81	↓	↓	22	0												
165			21	6												
162	5	A	19	6	0'-7"										18'-11"	
128	5	B	3	6		0'-10"									2'-8"	
93	4	S	21	6												
	Haunch															
96	5	G	4	9		1'-6"	1'-2"	1'-3"	0'-10"			0'-10"	0'-10"		3'-7"	
49	5	S	6	0												2 Test Bars
	North Parapet															
21	4	S	15	0												2 Test Bars
64	4	R	4	3		2'-4"	0'-8"	1'-3"				0'-2"				
	South Parapet															
20	4	S	15	0												
69	4	R	4	1		2'-4"	0'-6"	1'-3"				0'-2"				
	Southbound															
	Deck Slab															
129	6	B	4	3		1'-0"									3'-3"	1 Test Bar
162	5	S	29	0												
81	↓	↓	22	0												
165			21	6												
162	5	A	19	6	0'-7"										18'-11"	
128	5	B	3	6		0'-10"									2'-8"	
93	4	S	21	6												
	Haunch															
96	5	G	4	9		1'-6"	1'-2"	1'-3"	0'-10"			0'-10"	0'-10"		3'-7"	
48	5	S	6	0												
	North Parapet															
20	4	S	15	0												
64	4	R	4	1		2'-4"	0'-6"	1'-3"				0'-2"				
	South Parapet															
20	4	S	15	0												
64	4	R	4	3		2'-4"	0'-8"	1'-3"				0'-2"				

NOTE

"The bar schedules and bending diagrams shown on the plans are furnished for informational purposes only, and the State does not assume responsibility for their accuracy. The Contractor's bar fabricator shall verify the correctness in preparing his order lists and bending diagrams. Any expense incident to revision of material as shown on the bar schedules and bending diagrams in order to make it comply with the design drawings shall be borne by the Contractor."

REVISIONS		
NO.	DATE	BY

RHODE ISLAND
DEPARTMENT OF TRANSPORTATION
DIVISION OF PUBLIC WORKS

ROUTE 4 EXTENSION

FROM STA. 53+00 TO STA. 255+00

NORTH KINGSTOWN RHODE ISLAND

LAFAYETTE R. R. BRIDGE NO. 243

REINFORCING SCHEDULE 2 OF 2

CHECKED BY R.H.M. DATE JAN. 86 SCALE - NONE

243-013

RICN 2019-CB-011

FED. ROAD DIV. NO.	STATE	FEDERAL AID PROJECT NO.	FISCAL YEAR	SHEET NO.	TOTAL SHEETS
1	RI	BHO-0243(001)	2019	1	82

INDEX OF DRAWINGS

SHEET No.	DESCRIPTION
1	COVER SHEET
2	STANDARD PLAN SYMBOLS & STANDARD LEGEND
3	STANDARD NOTES - 1
4	STANDARD NOTES - 2
5	LIST OF ABBREVIATIONS
6-8	BRIDGE GENERAL NOTES SHEET 1 THROUGH 3
9	KEY PLAN
LAFAYETTE R.R. BRIDGE NO.243	
10	BRIDGE GENERAL PLAN
11	TRANSVERSE AND LONGITUDINAL SECTIONS
12	PHASE CONSTRUCTION
13	WEST ABUTMENT DEMOLITION
14	EAST ABUTMENT DEMOLITION
15	DEMOLITION PLAN AND SECTIONS
16	ABUTMENT PYLON DEMOLITION
17	DEMOLITION SECTIONS AND PROTECTIVE SHIELDING
18	WEST ABUTMENT REHABILITATION
19	EAST ABUTMENT REHABILITATION
20	JOINT REPAIR DETAILS
21	DECK REPAIR DETAILS
22	CAST IN PLACE BARRIERS
23	WEST ABUTMENT PYLON REHABILITATION
24	EAST ABUTMENT PYLON REHABILITATION
25	EXPANSION JOINT DETAILS
26	PARAPET AND BARRIER CURB JOINT DETAILS
27	FRAMING PLAN, NOTES AND DETAILS
28-32	STEEL BEAM REPAIRS SHEET 1 THROUGH 5
COLLINGWOOD R.R. BRIDGE NO. 772	
33	BRIDGE GENERAL PLAN
34	TRANSVERSE AND LONGITUDINAL SECTIONS
35	PHASE CONSTRUTION
36	DEMOLITION PLAN AND SECTIONS
37	WEST ABUTMENT DEMOLITION
38	EAST ABUTMENT DEMOLITION
39	DEMOLITION SECTIONS AND DETAILS
40	WEST ABUTMENT REHABILITATION
41	EAST ABUTMENT REHABILITATION
42	DECK REPAIR DETAILS
43	JOINT AND DECK REPAIR DETAILS
44	CAST IN PLACE CONCRETE DETAILS
45	SAFETY WALK, PARAPET & CURB JOINT DETAILS
46-48	STEEL BEAM REPAIR DETAILS SHEET 1 THROUGH 3
CORONADO ROAD BRIDGE NO. 834	
49	BRIDGE GENERAL PLAN
50	TRANSVERSE AND LONGITUDINAL SECTIONS
51	ABUTMENT DEMOLITION
52	DEMOLITION AT PIER
53	ABUTMENT REHABILITATION
54-55	JOINT REPAIR DETAILS SHEET 1 THROUGH 2
56-57	STRUCTURAL CONC. MASONRY REPAIR DETAILS SHEET 1 THROUGH 2
58	TEMPORARY JACKING & SHORING DETAILS
59	EXPANSION BEARING DETAILS
GORTON RAILROAD BRIDGE NO. 841	
60	BRIDGE GENERAL PLAN
61	TRANSVERSE AND LONGITUDINAL SECTIONS
62	DEMOLITION PLAN AND SECTIONS
63	EAST ABUTMENT DEMOLITION
64	WEST ABUTMENT DEMOLITION
65	DEMOLITION SECTIONS AND DETAILS
66	EAST ABUTMENT REHABILITATION
67	WEST ABUTMENT REHABILITATION
68-69	JOINT REPAIR DETAILS SHEET 1 THROUGH 2
70	EXPANSION JOINT DETAILS
STANDARD DETAIL SHEETS	
71-72	MISCELLANEOUS DETAILS SHEET 1 THROUGH 2
MAINTENANCE AND PROTECTION OF TRAFFIC PLANS	
73-82	MAINTENANCE AND PROTECTION OF TRAFFIC PLANS SHEET 1 THROUGH 10

STATE OF RHODE ISLAND

DEPARTMENT OF TRANSPORTATION

PLANS, PROFILES AND SECTIONS OF PROPOSED

STATEWIDE BRIDGE REPAIRS

CONTRACT 4 - AMTRAK BRIDGES

LENGTH = 11.0 MILES

CITY OF WARWICK
AND
TOWN OF NORTH KINGSTOWN
COUNTIES OF KENT AND WASHINGTON

R.I. CONTRACT NO. 2019-CB-011 F.A. PROJECT NO. BHO-0243(001)

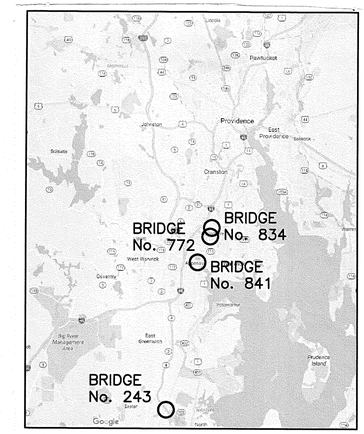

LOCUS MAP
NOT TO SCALE

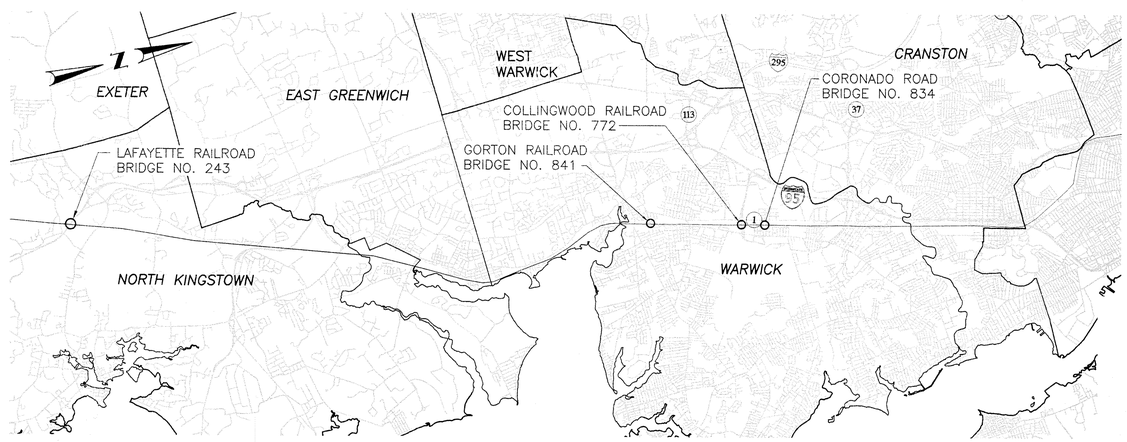

LOCATION MAP
NOT TO SCALE

MARK S. GREENLEAF
No. 5247
REGISTERED PROFESSIONAL ENGINEER
12-7-18

R.I. DEPARTMENT OF TRANSPORTATION

APPROVED
ADMINISTRATOR, PROJECT MANAGEMENT — DATE 12/10/18

APPROVED
CHIEF ENGINEER OF INFRASTRUCTURE — DATE 12/10/18

APPROVED
DIRECTOR — DATE 12/10/18

US DEPARTMENT OF TRANSPORTATION
FEDERAL HIGHWAY ADMINISTRATION

APPROVED
DIVISION ADMINISTRATOR — DATE

R.I. STANDARD SPECIFICATIONS AND STANDARD DETAILS

SPECIFICATIONS TO GOVERN THIS PROJECT ARE THE R.I. STANDARD SPECIFICATIONS FOR ROAD AND BRIDGE CONSTRUCTION, AMENDED 2018, WITH ALL REVISIONS, AND THE STATE AND FEDERAL SPECIAL PROVISIONS INCLUDED IN THE CONTRACT DOCUMENTS. STANDARD DETAILS FOR THIS PROJECT ARE R.I. STANDARD DETAILS, 1998 EDITION, WITH ALL REVISIONS.

COMMONWEALTH ENGINEERS & CONSULTANTS, INC.
400 SMITH STREET
PROVIDENCE, RI 02908

Contract Number 2019-CB-011
Volume Number 1
Number of Sheet 1
Total Sheets 82

0113R_V1_001_BCOVER

P:\100001\0027.00 On-Call Bridge Design\10027.13 Ten Bridges_Drawings\Structural_Current_Drawings\Contract No. AAMTRAK0113R_V1_001_BCOVER.dwg, 12/7/2018 8:13:13 AM, JTA

FED. ROAD DIV. NO.	STATE	FEDERAL AID PROJECT NO.	FISCAL YEAR	SHEET NO.	TOTAL SHEETS
–	RI	–	2019	2	82

EXISTING		NEW
	EDGE OF PAVEMENT	
	BERM	
	CURB	
	GUARDRAIL	
MB	MAILBOX	
NO.	UTILITY POLE	NO.
	POLE GUY	GUY
	LUMINARE	
SIGN	SIGN	
(SIZE)SD	SUBDRAIN	N(SIZE)SD
(SIZE)D	STORMDRAIN	(Length → Size)
(SIZE)S	SANITARY SEWER	(Length → Size)
(SIZE)W	WATER MAIN	N(SIZE)W
(SIZE)G	GAS MAIN	N(SIZE)G
(SIZE)T	TELEPHONE DUCT	N–#(SIZE)T
(SIZE)E	ELECTRIC DUCT	N–#(SIZE)E
	PLUG AND CAP PIPE	
	ABANDONED UTILITY	
	FLARED END SECTION	
	HEADWALL	
WG OR GG	WATER OR GAS GATE	
CB	CATCH BASIN	
MH	MANHOLE	
HYD	HYDRANT	
1+00	BASELINE OR CENTERLINE	1+00
EXIST. S.H.L. PLAT NO. XX	STATE HIGHWAY LINE	NEW S.H.L. PLAT NO. XX
EXIST. S.F.L. PLAT NO. XX	STATE FREEWAY LINE	NEW S.F.L. PLAT NO. XX
EXIST. P.E.B.	PERMANENT EASEMENT LINE	NEW P.E.B.
EXIST. T.E.B.	TEMPORARY EASEMENT LINE	NEW T.E.B.
	PROPERTY LINE	
CITY NAME / TOWN NAME	CITY OR TOWN LINE	
PWW	PAVED WATERWAY	
ELEV.	CONTOUR LINE	ELEV.
	OPEN DITCH	
R.I.H.B.	R.I. HIGHWAY BOUND	
S.B.	STONE BOUND	
	RETAINING WALL	
	FIELD STONE WALL	
NO.	BORINGS	NO.
TYPE	FENCE	
	WOOD OR BRUSH LINE	
	TREES	
(NAME)	RIVER OR STREAM	
	WETLAND AREA	
NO. TYPE MATERIAL	BUILDING	
	FOUNDATION	
	BUILDING TO BE REMOVED	
	RAILROAD TRACKS	
	CUT AND MATCH	
	RIP–RAP	
	CUT SLOPE	ROADWAY
	FILL SLOPE	ROADWAY / TOP OF SLOPE / ROADWAY / TOE OF SLOPE
	ROCK CUT	ROCK SHELF / ROCK / CUT
00.00	SPOT GRADE	00.00
	AREA GRADED TO DRAIN	ELEV.
	BALED HAY RI STD 9.1.0	
	BALED HAY & SILT FENCE RI STD. 9.3.0	
123 124 125	EDGE OF WETLAND	
	WETLAND PERIMETER	
ASSF	AREA SUBJECT TO STORM FLOW	
100 YR. FLOOD BOUNDARY	100–YEAR FLOOD PLAIN	
	LIMIT OF DISTURBANCE	LIMIT OF DISTURBANCE
	LIMIT OF CLEARING	LIMIT OF CLEARING

1.1.0	UNDERDRAIN
1.3.0	CONCRETE CONNECTING COLLAR
2.1.0	CONCRETE HEADWALLS FOR PIPE CULVERTS
2.2.0	STANDARD HEADWALLS FOR MULTIPLE 3'–6" TO 7'–0' PIPE CULVERTS
2.3.0 (DIA.)	PRECAST CONCRETE FLARED END SECTION
3.2.0	BRICK/SOLID BLOCK 4'–0" ROUND MANHOLE
3.2.1 (DIA.)	BRICK/SOLID BLOCK 5'–0" OR 6'–0" ROUND MANHOLE
3.3.0	BRICK/SOLID BLOCK TYPE "D" SQUARE CATCH BASIN
3.3.2	BRICK/SOLID BLOCK TYPE "F" SQUARE CATCH BASIN
3.3.3	SOLID BLOCK FLUSH SQUARE CATCH BASIN
3.4.0	BRICK/SOLID BLOCK TYPE "D" ROUND CATCH BASIN
3.4.1	BRICK/SOLID BLOCK ROUND CATCH BASIN WITH GUTTER INLET
3.4.2	BRICK/SOLID BLOCK TYPE "F" ROUND CATCH BASIN
3.4.3	BRICK/SOLID BLOCK TYPE "R" CATCH BASIN
3.4.4	SOLID BLOCK FLUSH ROUND CATCH BASIN
3.4.5 (DIA.)	BRICK/SOLID BLOCK 5'–0" OR 6'–0" ROUND CATCH BASIN
3.5.0	SOLID BLOCK SHALLOW TYPE "F" SQUARE CATCH BASIN
3.5.1 (SIZE)	SOLID BLOCK SHALLOW 5'–0" OR 6'–0" SQUARE CATCH BASIN
3.6.0	BRICK/SOLID BLOCK DROP INLET
3.7.0 (DIA.)	BRICK/SOLID BLOCK ROUND MANHOLE OR CATCH BASIN GREATER THAN 12'–0"
4.2.0	PRECAST 4'–0" ROUND MANHOLE
4.2.1	PRECAST 5'–0" ROUND MANHOLE
4.2.2	PRECAST 6'–0" ROUND MANHOLE
4.3.0 (SIZE)	PRECAST 4'–0" OR 6'–0" SQUARE MANHOLE OR CATCH BASIN
4.4.0 (DIA.)	PRECAST 4'–0", 5'–0", OR 6'–0" ROUND CATCH BASIN
4.5.0	PRECAST CONCRETE DROP INLET
4.5.1	PRECAST CONCRETE DROP INLET LATERAL OUTLET
4.5.2	PRECAST CONCRETE DROP INLET LONGITUDINAL OUTLET
5.3.0	CATCH BASIN AND MANHOLE STEP
5.4.0	CONCRETE COLLARS
6.1.0	LIGHT–DUTY SQUARE FRAME AND ROUND COVER
6.1.1	HEAVY DUTY SQUARE FRAME AND ROUND COVER
6.2.0	LIGHT–DUTY ROUND FRAME AND COVER
6.2.1	HEAVY–DUTY ROUND FRAME AND COVER
6.3.0	SQUARE FRAME AND GRATE
6.3.1	SQUARE FRAME AND GRATE
6.3.2	SQUARE FRAME AND GRATE (BICYCLE SAFE)
6.3.3	HIGH CAPACITY FRAME AND GRATE
6.3.4	HIGH CAPACITY FRAME AND GRATE (BICYCLE SAFE)
6.4.0	ROUND FRAME AND GRATE
7.1.0S	PRECAST CONCRETE CURB (STRAIGHT)
7.1.0C	PRECAST CONCRETE CURB (CIRCULAR)
7.1.1	3'–0' PRECAST CONCRETE TRANSITION CURB
7.1.2	6'–0" PRECAST CONCRETE TRANSITION CURB
7.1.4	PRECAST 2'–0" RADIUS CORNER
7.1.5	PRECAST CONCRETE INLET STONE (FOR SQUARE CATCH BASIN)
7.1.6	PRECAST CONCRETE INLET STONE (FOR ROUND CATCH BASIN)
7.1.7	PRECAST CONCRETE APRON STONE (FOR SQUARE CATCH BASIN)
7.1.8	PRECAST CONCRETE APRON STONE (FOR ROUND CATCH BASIN)
7.2.0S	PRECAST CONCRETE SLOPED FACE CURB (STRAIGHT)
7.2.0C	PRECAST CONCRETE SLOPED FACE CURB (CIRCULAR)
7.2.1	PRECAST CONCRETE SLOPED FACE TRANSITION CURB
7.2.2	PRECAST CONCRETE TRANSITION CURB (VERTICAL FACE TO SLOPED FACE)
7.3.0S	GRANITE CURB (STRAIGHT)
7.3.0C	GRANITE CURB (CIRCULAR)
7.3.1	3'–0" GRANITE TRANSITION CURB
7.3.2	6'–0" GRANITE TRANSITION CURB
7.3.3	GRANITE WHEELCHAIR RAMP TRANSITION CURB
7.3.4	GRANITE 2'–0" RADIUS CORNER
7.3.5	GRANITE INLET STONE (FOR SQUARE CATCH BASIN)
7.3.6	GRANITE INLET STONE (FOR ROUND CATCH BASIN)
7.3.7	GRANITE APRON STONE (FOR SQUARE CATCH BASIN)
7.3.8	GRANITE APRON STONE (FOR ROUND CATCH BASIN)
7.4.0	GRANITE SLOPED FACE CURB
7.4.1	GRANITE SLOPED FACE TRANSITION CURB
7.4.2	GRANITE TRANSITION CURB (VERTICAL FACE TO SLOPE FACE)
7.5.0	BITUMINOUS CONCRETE LIP CURB
7.5.1A	BITUMINOUS BERM (CONSTRUCTION METHOD A)
7.5.1B	BITUMINOUS BERM (CONSTRUCTION METHOD B)
7.6.0	CURB SETTING DETAIL
8.2.0	BITUMINOUS CONCRETE DITCH
8.3.0	RIP–RAP DITCH
8.4.0	PAVED WATERWAY
9.1.0	BALED HAY EROSION CHECK
9.2.0	SILT FENCE DETAIL
9.3.0	BALED HAY DITCH EROSION CHECK AND SILT FENCE COMBINED
9.4.0	BALED HAY DITCH AND SWALE EROSION CHECK
9.5.0	LOG AND HAY CHECK DAM
9.7.0	DEWATERING BASIN
9.8.0	BALED HAY CATCH BASIN INLET PROTECTION
9.9.0	CONSTRUCTION ACCESS
10.1.0	WET STONE MASONRY RETAINING WALL
10.2.0	RUBBLE MASONRY WALL
10.3.0	CONCRETE RETAINING WALL
10.4.0	STONE MASONRY STEPS
14.1.0	CONCRETE HIGHWAY BOUND
15.1.0	POST AND MOUNTINGS FOR RURAL MAILBOX
15.2.0 (NO.)	POST AND MULTIPLE MOUNTINGS FOR RURAL MAILBOXES
18.2.0	PRECAST TYPE "A" HANDHOLE
18.2.2	HEAVY DUTY TYPE "H" HANDHOLE
18.3.0	ALUMINUM LIGHTING STANDARDS
20.2.0	BI–DIRECTIONAL CONTROL DEVICE
24.6.1	STREET SIGN MOUNTING DETAIL
26.2.0	POLYETHYLENE DRUM WITH MARKINGS
26.3.0	PVC PLASTIC PIPE TYPE III BARRICADE
31.1.0	CHAIN LINK FENCE 3'–0" TO 4'–0"
31.2.0	CHAIN LINK FENCE 5'–0" TO 6'–0"
31.2.1	CHAIN LINK FENCE 5'–0" TO 6'–0" INTERMEDIATE POST
31.3.0	WOVEN WIRE RIGHT–OF–WAY FENCE (STEEL POST)
34.1.0	TYPICAL GUARDRAIL INSTALLATION
34.2.0	STEEL BEAM GUARDRAIL
34.2.1	STEEL BEAM GUARDRAIL DETAILS
34.2.2	STEEL BEAM GUARDRAIL DOUBLE FACED ASSEMBLY
34.2.3	STEEL BEAM GUARDRAIL FIXTURES
34.2.5	STEEL BEAM GUARDRAIL REFLECTORIZED TRIANGULAR DELINEATOR
34.3.1	GUARDRAIL END SECTION
34.3.2	TERMINAL END SECTION (SINGLE FACE)
34.3.3	ANCHORAGE DETAILS APPROACH END SECTION
34.3.4	ANCHORAGE DETAILS TRAILING END SECTION
34.4.0	STEEL BACKED TIMBER GUARDRAIL
34.4.1	STEEL BACKED TIMBER GUARDRAIL TERMINAL SECTION–TYPE 1
40.1.0	DOUBLE–FACED PRECAST MEDIAN BARRIER
40.2.0	SINGLE–FACED PRECAST MEDIAN BARRIER
40.2.1	SINGLE–FACED PRECAST MEDIAN BARRIER
40.3.0	PRECAST MEDIAN BARRIER TRANSITION UNIT
40.5.0	PRECAST MEDIAN BARRIER FOR TEMPORARY TRAFFIC CONTROL
43.1.0	CEMENT CONCRETE SIDEWALK
43.2.0	BITUMINOUS CONCRETE SIDEWALK
43.3.0	WHEELCHAIR RAMP
43.3.1	WHEELCHAIR RAMP FOR LIMITED RIGHT–OF–WAY AREAS
43.4.0	DRIVEWAY DEVELOPMENT FOR 3'–0" TRANSITION CURB
43.4.1	DRIVEWAY DEVELOPMENT FOR 6'–0" TRANSITION CURB
43.5.0	CEMENT CONCRETE DRIVEWAYS
48.1.0	DETECTABLE WARNING SYSTEM
51.1.0	TREE PROTECTION DEVICE
51.1.1	DRIP LINE TREE PROTECTION DEVICE FOR EXISTING TREES
51.2.0	SHRUB PROTECTION DEVICE
51.3.0	TREE WELL
51.4.0	TREE WALL

AB	ADJUST CATCH BASIN TO GRADE
ABM	ADJUST CATCH BASIN TO MANHOLE
AC	ADJUST CURB STOP TO GRADE
AD	ADJUST DRAINAGE MANHOLE TO GRADE
AE	ADJUST ELECTRIC MANHOLE TO GRADE
AFC	ADJUST FRAME AND COVER TO GRADE
AFG	ADJUST FRAME AND GRATE TO GRADE
AG	ADJUST GAS GATE BOX TO GRADE
AHH	ADJUST HANDHOLE TO GRADE
AS	ADJUST SANITARY SEWER MANHOLE TO GRADE
AT	ADJUST TELEPHONE MANHOLE TO GRADE
AW	ADJUST WATER GATE BOX TO GRADE
BCD	BITUMINOUS CONCRETE DRIVEWAY 3" BITUMINOUS CONCRETE TYPE I–2 8" GRAVEL BORROW SUBBASE COURSE
BPS	BUILD NEW STRUCTURE OVER EXISTING PIPE
CCB	CLEAN CATCH BASIN
CCP	CUT AND CAP PIPE WITH RESTRAINT (ALL SIZES)
CFP	CLEAN AND FLUSH PIPE
CG	CLEARING AND GRUBBING
CMH	CLEAN MANHOLE
CP (DEPTH)	COLD PLANE
CPP	CUT AND PLUG PIPE (ALL TYPES, ALL SIZES)
DB	REMOVE AND DISPOSE BITUMINOUS CURB
DC	REMOVE AND DISPOSE CONCRETE CURB
DCB	REMOVE AND DISPOSE CATCH BASIN
DDI	REMOVE AND DISPOSE DROP INLET
DF	REMOVE AND DISPOSE FENCE
DFC	REMOVE AND DISPOSE FRAME AND COVER
DFE	REMOVE AND DISPOSE FLARED END SECTION
DFG	REMOVE AND DISPOSE FRAME AND GRATE
DFH	REMOVE AND DISPOSE FIRE HYDRANT
DFP	REMOVE AND DISPOSE FLEXIBLE PAVEMENT
DG	REMOVE AND DISPOSE GUARDRAIL
DH	REMOVE AND DISPOSE HEADWALL
DHB	REMOVE AND DISPOSE HIGHWAY BOUND
DHH	REMOVE AND DISPOSE HANDHOLE
DL	REMOVE AND DISPOSE LIGHT AND FOUNDATION
DMB	REMOVE AND DISPOSE MEDIAN BARRIER
DMH	REMOVE AND DISPOSE MANHOLE
DMM	REMOVE AND DISPOSE MEDIAN MARKER
DOW	REMOVE AND DISPOSE OBSERVATION WELL
DP	REMOVE AND DISPOSE PIPE
DPB	REMOVE AND DISPOSE PAVEMENT AND RIGID BASE
DRB	REMOVE AND DISPOSE RIGID BASE
DS	REMOVE AND DISPOSE SIGN
DSS	REMOVE AND DISPOSE TRAFFIC SIGNAL SYSTEM
DSW	REMOVE AND DISPOSE SIDEWALK
DTD	REMOVE AND DISPOSE TELEPHONE DUCT BANKS
DUP	REMOVE AND DISPOSE UTILITY POLE
DWW	REMOVE AND DISPOSE PAVED WATERWAY
FF	FILTER FABRIC RIPRAP FLARED END UNDERLAYMENT
GET	FLARED GUARDRAIL END TREATMENT
IA	IMPACT ATTENUATOR
IDL	IMPERVIOUS DITCH LINER
LOD	LIMIT OF DISTURBANCE
LOR	LIMIT OF REGRADING
LS	4" LOAM AND SEED
NFH	NEW FIRE HYDRANT WITH GATE VALVE
NIC	NOT IN THIS CONSTRUCTION CONTRACT
NWB	FURNISH AND INSTALL NEW WATER GATE VALVE BOX
NWVB	FURNISH AND INSTALL NEW WATER GATE VALVE AND BOX
NWCB	FURNISH AND INSTALL NEW WATER CURB STOP BOX
NWSB	FURNISH AND INSTALL NEW WATER CURB STOP AND BOX
PCD	PERMANENT CHECK DAM
PS	4" PLANTABLE SOIL AND SEED
RCB	RECONSTRUCT TYPE "D" CATCH BASIN, TO CATCH BASIN WITH GUTTER INLET
RCM	R.I.D.O.T. COMMUNICATIONS MANHOLE
RHH	REMOVE, HANDLE, HAUL, TRIM, RESET CURB EDGING, STRAIGHT, CIRCULAR (ALL TYPES)
RLP	RELOCATE LAMP POST
RMB	RELOCATE MAILBOX (BY OTHERS)
RPM	REMOVE PAVEMENT MARKINGS
RRP	RIP–RAP PAD (SEE DETAIL)
RRS	REMOVE AND RELOCATE SIGN
RUP	RELOCATE UTILITY POLE (BY OTHERS)
SB	STONE BAFFLE
SBAE	STEEL BEAM BRIDGE CONNECTION APPROACH END (W/O NESTED RAIL)
SBTE	STEEL BEAM BRIDGE CONNECTION TRAILING END (W/NESTED RAIL)
SD–	STRUCTURAL DISPOSITION – SEE CS PAGES OF SPECIFICATION
SF	REMOVE AND STOCKPILE FENCE
SGA	SPECIAL GRADED AGGREGATE
SGC	REMOVE AND STOCKPILE GRANITE CURB
SGR	REMOVE AND STOCKPILE GUARDRAIL
SH	REMOVE AND STOCKPILE HYDRANT
SS	REMOVE AND STOCKPILE SIGN
STS	REMOVE AND STOCKPILE TRAFFIC SIGNAL SYSTEM
TB	CONCRETE THRUST BLOCK
TEP	TIE EXISTING PIPE INTO NEW STRUCTURE
TNP	TIE NEW PIPE INTO EXISTING STRUCTURE
TBT	THRIE BEAM TRANSITION
TBBC	THRIE BEAM BRIDGE CONNECTION
TT	TREE TRIMMING
WCM	4" WOOD CHIP MULCH
4DY	4" EPOXY RESIN PAVEMENT MARKINGS – DOUBLE YELLOW
6W	6" EPOXY RESIN PAVEMENT MARKINGS – WHITE
12W	12" EPOXY RESIN PAVEMENT MARKINGS – WHITE
6WT	6" PREFORMED PATTERNED MARKING (HIGH PERFORMANCE TAPE)
4Y	4" EPOXY RESIN PAVEMENT MARKINGS – YELLOW
6Y	6" EPOXY RESIN PAVEMENT MARKINGS – YELLOW
P.G.L.	PROFILE GRADE LINE

COMMONWEALTH
ENGINEERS & CONSULTANTS, INC.
400 SMITH STREET
PROVIDENCE, RI 02908

REVISIONS		
NO.	DATE	BY
1	6/07	TRB

RHODE ISLAND
DEPARTMENT OF TRANSPORTATION

STATEWIDE BRIDGE REPAIRS
CONTRACT 4 - AMTRAK BRIDGES

RHODE ISLAND

STANDARD PLAN SYMBOLS & STANDARD LEGEND

CHECKED BY _____ DATE _____ SCALE NO SCALE

FED. ROAD DIV. NO.	STATE	FEDERAL AID PROJECT NO.	FISCAL YEAR	SHEET NO.	TOTAL SHEETS
–	RI	–	2019	3	82

GENERAL NOTES:

1. ANY DAMAGE TO EXISTING PAVEMENT, BRIDGES, CONDUIT, SIDEWALK, FENCES, ETC., CAUSED BY THE CONTRACTOR SHALL BE REPAIRED BY THE CONTRACTOR AT NO ADDITIONAL COST TO THE STATE.

2. THE CONTRACTOR SHALL PLACE ALL EQUIPMENT AND MATERIAL AS FAR AWAY AS POSSIBLE FROM THE EDGE OF THE TRAVEL LANE SO AS NOT TO CAUSE A SAFETY HAZARD, IN ACCORDANCE WITH SECTION 106.06 OF THE R.I.D.O.T. STANDARD SPECIFICATION, LATEST EDITION.

3. IT IS THE CONTRACTOR'S RESPONSIBILITY TO ENSURE THAT THE EXISTING CONDITIONS ARE NOT OBLITERATED BEFORE CONTROL POINTS ARE LOCATED AND CONSTRUCTION LAYOUT IS ESTABLISHED. THE CONSTRUCTION LAYOUT SHALL BE PROVIDED IN SUFFICIENT DETAIL, THEREBY ENABLING HIM TO CONSTRUCT THE PROJECT IN CONFORMITY WITH THE PLANS AND SPECIFICATIONS. SURVEY WILL BE PROVIDED BY THE CONTRACTOR. THE RESIDENT ENGINEER WILL NOT AUTHORIZE CONSTRUCTION ACTIVITIES TO BEGIN UNTIL HE IS SATISFIED THAT ALL GROUND CONTROL HAS BEEN ESTABLISHED, TIED DOWN, AND DULY RECORDED IN STANDARD FIELD BOOKS.

4. ALL R.I. STD. 9.9.0 CONSTRUCTION ACCESS ROADS SHALL BE CONSTRUCTED PRIOR TO ANY ROADWAY ACCEPTING CONSTRUCTION TRAFFIC.

5. THE FREQUENCY AND APPLICATION RATES FOR THE DUST CONTROL ITEMS WILL BE AS DIRECTED BY THE ENGINEER.

6. ALL SIDEWALK AND DRIVEWAYS DESIGNATED FOR REPLACEMENT SHALL BE CUT AND MATCHED AT LOCATIONS SHOWN ON THE PLANS OR AS DIRECTED BY THE ENGINEER.

7. ASPHALT EMULSION TACK COAT SHALL BE PLACED PRIOR TO PAVEMENT PLACEMENT ON THE CONCRETE BASE OR COLD PLANED PAVEMENT, AND ON ANY NEW COURSE WHICH HAS BEEN OPEN TO TRAFFIC, OR ANY NEW COURSE WHICH HAS BEEN EXPOSED FOR MORE THAN 3 DAYS, AND/OR AS DIRECTED BY THE ENGINEER. IT SHALL ALSO BE APPLIED TO VERTICAL PAVEMENT FACES BETWEEN ADJOINING PAVEMENT SECTIONS. ALL APPLICATIONS ON BOTH HORIZONTAL AND VERTICAL SURFACES SHALL BE PAID FOR UNDER THE CONTRACT UNIT BID PRICE FOR CODE 403.0300 "ASPHALT EMULSION TACK COAT."

8. THE LIMITS OF CLEARING AND SURFACE DISTURBANCE MUST BE STRICTLY ADHERED TO IN ALL AREAS. IN ADDITION TO THOSE AREAS SPECIFICALLY DESIGNATED ON THE PLANS, THE CONTRACTOR WILL BE RESPONSIBLE FOR PROVIDING AND PLACING, AT HIS OWN EXPENSE, PLANTABLE SOIL AND SEED IN AREAS WHICH ARE OUTSIDE OF THE PROJECT'S AREAS OF DISTURBANCE AND WHICH ARE IMPACTED BY CONSTRUCTION OPERATIONS INCLUDING THOSE AREAS WHERE VEHICLES, EQUIPMENT AND MATERIALS ARE STORED WITH THE PERMISSION OF THE ENGINEER.

9. UNDER NO CIRCUMSTANCE WILL THE CONTRACTOR BE ALLOWED TO STOCKPILE REMOVED PAVEMENT MATERIALS WITHIN THE PROJECT LIMITS.

10. CLEANING AND SWEEPING OF PAVEMENT WILL INCLUDE REMOVAL OF ALL PAVEMENT DEBRIS PRIOR TO THE PLACEMENT OF EACH BITUMINOUS PAVEMENT LIFT. ALL CLEANING AND SWEEPING SHALL BE DONE TO THE SATISFACTION OF THE ENGINEER.

11. PRIOR TO INSTALLATION, ALL SIGNS, MOUNTINGS AND LOCATIONS SHALL BE APPROVED OR MODIFIED BY THE ENGINEER.

12. THE COORDINATE SYSTEM, IF SHOWN, IS THE RHODE ISLAND STATE PLANE COORDINATE SYSTEM.

13. PAVEMENT OPERATIONS FOR CURBED SECTIONS: IN AREAS WHERE CURBING IS SET TO FINISH LINE AND GRADE, THE CONTRACTOR WILL NOT BE REQUIRED TO UTILIZE THE SENSOR AND SKY–TYPE DEVICE FOR AUTOMATIC GRADE CONTROL, BUT WILL BE ALLOWED TO MANUALLY ADJUST THE BITUMINOUS PAVER FOR CONTROLLING GRADE.

14. THE CONTRACTOR SHALL BE RESPONSIBLE FOR MAINTAINING ALL ROADWAYS FREE OF DEBRIS RESULTING FROM THEIR CONSTRUCTION OPERATIONS. ALL DEBRIS SHALL BE REMOVED TO THE SATISFACTION OF THE ENGINEER AT NO ADDITIONAL COST TO THE STATE.

15. NO FUEL STORAGE, VEHICLE REFUELING, OR EQUIPMENT STORAGE SHALL TAKE PLACE IN DESIGNATED WETLANDS, NOR WITHIN 100' OF ANY WATER BODY. THIS REQUIREMENT SHALL NOT SUPERSEDE ANY FEDERAL, STATE OR LOCAL LAW, ORDINANCE, RULE OR REGULATION THAT APPLIES TO THE SAME, UNLESS THIS REQUIREMENT IS MORE STRINGENT THAN SAID LAW, ORDINANCE, RULE OR REGULATION.

16. THE CONTRACTOR SHALL BE RESPONSIBLE TO ENSURE THAT AT THE END OF FINAL PAVING OPERATIONS, FLOW TO EXISTING DRAINAGE STRUCTURES HAS BEEN REESTABLISHED AND THAT NO ISOLATED DEPRESSIONS REMAIN. THERE SHALL BE NO SEPARATE PAYMENT FOR THIS PROVISION; IT SHALL BE CONSIDERED INCIDENTAL TO PAVING AND COLD PLANING OPERATIONS.

17. ALL EMBANKMENTS SHALL BE PLACED IN HORIZONTAL LAYERS NOT EXCEEDING 12" (AFTER COMPACTION) AND SHALL BE COMPACTED AS SPECIFIED BEFORE THE NEXT LAYER IS PLACED. ALSO, EMBANKMENT CONSTRUCTION SHALL CONFORM TO SECTION 202.03.2 OF THE R.I.D.O.T. STANDARD SPECIFICATIONS, LATEST EDITION.

18. IF THIS PROJECT IS ON A HURRICANE EVACUATION AND DIVERSIONARY ROUTE, AS DESIGNATED ON THE COVERSHEET, THE CONTRACTOR IS ADVISED THAT UPON 12 (TWELVE) HOURS NOTICE THE ROADWAY SHALL BE OPEN TO EVACUEES AND EMERGENCY PERSONNEL. ANY EXTRA WORK NECESSARY TO COMPLY WITH THIS REQUIREMENT WILL BE REIMBURSED UNDER FORCE ACCOUNT PROCEDURES.

19. THE CONTRACTOR SHALL READ, BECOME FAMILIAR WITH, AND ADHERE TO ALL OF THE PROVISIONS, CONDITIONS, AND STIPULATIONS STATED IN THE ENVIRONMENTAL APPROVALS ISSUED FOR THE PROJECT FROM THE DEPARTMENT OF ENVIRONMENTAL MANAGEMENT (RIDEM). AND/OR THE ARMY CORPS OF ENGINEERS (ACOE). AND/OR THE COASTAL RESOURCES MANAGEMENT COUNCIL (CRMC). COPIES OF EACH OF THESE PERMITS ARE INCLUDED IN THE CS PAGES OF THE CONTRACT DOCUMENTS. ALL COSTS ASSOCIATED WITH THESE CONDITIONS SHALL BE CONSIDERED INCIDENTAL TO THE CONSTRUCTION AND INCLUDED WITH THE COST FOR THE ASSOCIATED BID ITEM(S).

20. FOR ALL PROJECTS INVOLVING KNOWN SITE REMEDIATION ISSUES, THE CONTRACTOR SHALL READ, BECOME FAMILIAR WITH, AND ADHERE TO ALL OF THE CONSTRUCTION RELATED PROVISIONS, CONDITIONS, AND STIPULATIONS OF ANY REMEDIAL PLANS DEVELOPED FOR THE PROJECT. COPIES OF THESE DOCUMENTS ARE INCLUDED IN THE CS PAGES OF THE CONTRACT DOCUMENTS. ALL COSTS ASSOCIATED WITH COMPLIANCE WITH THESE DOCUMENTS SHALL BE CONSIDERED INCIDENTAL TO THE CONSTRUCTION AND INCLUDED WITH THE COST FOR THE ASSOCIATED BID ITEM(S).

21. NO UNPROTECTED CONSTRUCTED FEATURE MAY PROJECT MORE THAN 4 INCHES ABOVE THE FINISHED GRADE OF A TRAVERSABLE SLOPE IN A CLEAR ZONE, e.g. HEADWALL, DRAINAGE INLET, ETC.

22. THE REMAINING SECTION OR STUB OF A BREAKAWAY BASE MAY NOT PROJECT MORE THAN 4 INCHES ABOVE THE FINISHED GRADE OF A TRAVERSABLE SLOPE IN A CLEAR ZONE, e.g. SIGN POSTS, LIGHT POLES, FIRE HYDRANTS, ETC.

DRAINAGE AND EROSION CONTROL NOTES:

1. FOR ALL PROJECTS WITH AT LEAST ONE(1) ACRE OF SOIL DISTURBANCE. R.I.D.O.T. IS REQUIRED TO DEVELOP AND ENFORCE A SITE SPECIFIC STORM WATER POLLUTION PREVENTION PLAN (SWPPP) IN ORDER TO REMAIN IN COMPLIANCE WITH THE RIPDES GENERAL PERMIT FOR STORMWATER DISCHARGES ASSOCIATED WITH CONSTRUCTION ACTIVITIES. THE CONTRACTOR SHALL READ, BECOME FAMILIAR WITH, AND ADHERE TO ALL OF THE PROVISIONS, CONDITIONS, AND STIPULATIONS OF THE GENERAL PERMIT AND THE SITE SPECIFIC SWPPP FOR THIS PROJECT. COPIES OF THESE DOCUMENTS ARE INCLUDED IN THE CS PAGES OF THE CONTRACT DOCUMENTS. ALL COSTS ASSOCIATED WITH ADHERENCE TO THE SWPPP SHALL BE CONSIDERED INCIDENTAL TO THE CONSTRUCTION AND INCLUDED WITH THE COST FOR THE ASSOCIATED BID ITEM(S).

2. NO UNDISTURBED AREAS SHALL BE CLEARED OF EXISTING VEGETATION AFTER OCTOBER 15 OF ANY CALENDAR YEAR OR DURING ANY PERIOD OF FULL OR LIMITED WINTER SHUTDOWN. ALL DISTURBED SOILS EXPOSED PRIOR TO OCTOBER 15 OF ANY CALENDAR YEAR SHALL BE SEEDED OR PROTECTED BY THAT DATE. ANY SUCH AREAS THAT DO NOT HAVE ADEQUATE VEGETATIVE STABILIZATION, AS DETERMINED BY THE RESIDENT ENGINEER OR ENVIRONMENTAL INSPECTOR, BY NOVEMBER 15 OF ANY CALENDAR YEAR, MUST BE STABILIZED THROUGH THE USE OF EROSION CONTROL MATTING OR HAY MULCH, IN ACCORDANCE WITH SPECIFICATIONS CONTAINED WITHIN THE R.I. SOIL EROSION AND SEDIMENT CONTROL HANDBOOK. IF WORK CONTINUES WITHIN ANY OF THESE AREAS DURING THE PERIOD FROM OCTOBER 15 THROUGH APRIL 15, CARE MUST BE TAKEN TO ENSURE THAT ONLY THE AREA REQUIRED FOR THAT DAY'S WORK IS EXPOSED, AND ALL ERODIBLE SOIL MUST BE RESTABILIZED WITHIN 5 WORKING DAYS. ANY WORK TO CORRECT PROBLEMS RESULTING FROM FAILURE TO COMPLY WITH THIS PROVISION SHALL BE THE RESPONSIBILITY OF THE CONTRACTOR. THERE WILL BE NO SEPARATE PAYMENT FOR THIS PROVISION, IT SHALL BE CONSIDERED INCIDENTAL TO CONSTRUCTION OPERATIONS. STABILIZATION OF ONE FORM OR ANOTHER AS DESCRIBED ABOVE SHALL BE ACHIEVED WITHIN 2 WEEKS OF FINAL GRADING.

3. STOCKPILES OF MATERIAL SHALL NOT BE LOCATED WITHIN REGULATED WETLANDS OR BUFFER ZONE AREAS. THEY SHALL HAVE SIDE SLOPES NO GREATER THAN 30% AND STOCKPILES OF ERODABLE MATERIAL SHALL ALSO BE SEEDED AND RINGED WITH R.I. STD. 9.1.0 TO STABILIZE.

4. IF THE PLANS INCLUDE SPECIFIC AREAS FOR PLACEMENT OF CONSTRUCTION DEWATERING BASINS AND/OR EQUIPMENT AND MATERIALS STORAGE AND STOCKPILING, AND IF THE CONTRACTOR ELECTS TO UTILIZE ANY OTHER AREAS FOR THESE PURPOSES, THIS SHALL BE APPROVED BY THE ENGINEER ONLY AFTER OBTAINING ANY NECESSARY PERMITS AND/OR PERMIT MODIFICATIONS FROM THE APPROPRIATE REGULATORY AUTHORITY(IES). ANY PERMITTING REQUIREMENTS SHALL BE THE RESPONSIBILITY OF THE CONTRACTOR AND SHALL BE ACCOMPLISHED AT NO COST TO THE STATE. THE ENGINEER WILL COORDINATE SUBMISSION OF ANY REQUIRED PERMIT APPLICATION MATERIALS WITH THE R.I.D.O.T. OFFICE OF ENVIRONMENTAL PROGRAMS.

5. JUTE MESH SHALL BE USED TO STABILIZE PLANTABLE SOIL AND/OR LOAM IN ALL DITCHES, ON ALL SLOPES ADJACENT TO WETLANDS AND WETLAND PERIMETERS, AND ON ALL SLOPES WITHIN WATER QUALITY BASINS. JUTE MESH IN DITCHES SHALL EXTEND TO AN ELEVATION 2 FEET ABOVE THE BOTTOM OF THE DITCH.

6. SEEDING ON ALL SLOPES 3 TO 1 OR STEEPER SHALL CONSIST OF THE FOLLOWING APPLICATIONS UNLESS CHANGED IN THE CONTRACT.

   a. SEEDING TYPE I.

   b. ADHESIVE MULCH STABILIZER

7. UNVEGETATED SLOPES SHALL NOT BE UNATTENDED OR EXPOSED FOR PERIODS IN EXCESS OF 2 WEEKS OR THROUGH THE INACTIVE WINTER SEASON.

8. PRIOR TO DRAINAGE AND UTILITY CONSTRUCTION, THE CONTRACTOR IS RESPONSIBLE FOR VERIFYING THE LOCATION (HORIZONTAL AND VERTICAL) OF ALL EXISTING PIPES AND/OR STRUCTURES WHICH ARE TO BE CONNECTED. ANY VARIATION FOUND FROM THE PLANS MUST BE BROUGHT TO THE ENGINEER'S ATTENTION PRIOR TO DRAINAGE AND UTILITY CONSTRUCTION. WORK CAN COMMENCE ONLY UPON THE ENGINEER'S AUTHORIZATION.

9. ALL DRAINAGE AND UTILITY STRUCTURES WITHIN THE PAVED ROADWAY SHALL BE ADJUSTED TO GRADE WITH THE SURROUNDING PAVEMENT PRIOR TO THE WINTER SHUTDOWN.

10. DURING CONSTRUCTION, THE CONTRACTOR SHALL BE RESPONSIBLE FOR MAINTAINING DRAINAGE AND RUNOFF FLOW DURING STORMS AND PERIODS OF RAINFALL THROUGHOUT THE WORK AREA.

11. CATCH BASIN RIM GRADES NOTED ON PLANS ARE DEPRESSED 0.1' LOWER THAN THE GUTTER GRADE. RIM ELEVATIONS SHOWN ARE FINAL GRADES. THE CONTRACTOR SHALL PLACE FRAMES AND GRATES 0.1' BELOW THE GRADE CONSTRUCTED IN THIS CONTRACT OR AS DIRECTED BY THE ENGINEER.

12. PROVISIONS FOR CLEARING TO ACCESS OUTFALLS DURING THE CLEANING AND FLUSHING OF THE CLOSED DRAINAGE SYSTEM SHALL BE KEPT TO A MINIMUM.

    ANY VEGETATIVE CLEARING SHALL BE LIMITED TO BRUSH AND TREES LESS THAN 3" DIAMETER.

    NO HEAVY EQUIPMENT MAY ENCROACH UPON VEGETATED PERIMETER OR RIVERBANK WETLANDS AS WELL AS BIOLOGICAL WETLANDS.

13. THE CONTRACTOR SHALL INSTALL ALL EROSION CONTROL DEVICES FOR OUTLET PROTECTION PRIOR TO CLEANING AND FLUSHING STORM WATER DRAINAGE. EROSION CONTROL DEVICES SHALL REMAIN IN PLACE UNTIL ALL FLUSHED SEDIMENTS ARE REMOVED. AT ALL OUTFALL LOCATIONS WHERE PIPES ARE TO BE CLEANED AND FLUSHED, OUTLET PROTECTION (R.I. STD. 9.1.0 OR 9.3.0) SHALL BE INSTALLED TO TRAP SEDIMENTS. THESE SEDIMENTS SHALL THEN BE REMOVED AND DISPOSED OF LEGALLY BEFORE THE OUTLET PROTECTION DEVICES ARE REMOVED. IF OUTLET PROTECTION AT THE OUTFALL IS NOT FEASIBLE, THEN THE OUTLET PIPE OF THE LAST DRAINAGE STRUCTURE TO BE CLEANED SHALL BE PLUGGED TO CAPTURE ALL MATERIALS FLUSHED FROM PIPES. AFTER THE MATERIALS ARE REMOVED FROM THE DRAINAGE STRUCTURE, THE OUTLET SHALL BE UNPLUGGED TO RESUME NORMAL FUNCTIONING.

14. R.I. STD. 9.8.0 BALED HAY INLET PROTECTION SHALL BE INSTALLED AT ALL CATCH BASINS AND INLETS WHENEVER SUBBASE IS EXPOSED, AND SHALL REMAIN IN PLACE UNTIL THE ABUTTING GROUND SURFACES ARE STABILIZED.

15. WHERE BALED HAY INLET PROTECTION AND SILT FENCES ARE USED AT CATCH BASINS, THEY SHALL BE REMOVED AT THE END OF THE PROJECT OR AS DIRECTED BY THE ENGINEER IN ORDER TO PREVENT CLOGGING OF THE INLET.

DRAINAGE AND EROSION CONTROL NOTES (CONTINUED):

16. DETENTION AND RETENTION BASINS MAY BE ROUGH GRADED AND STABILIZED WITH VEGETATION AND/OR OTHER EROSION CONTROL MEASURES AS REQUIRED BY THE ENGINEER PRIOR TO USE AS TEMPORARY SEDIMENTATION BASINS DURING PROJECT CONSTRUCTION. FINAL BASIN CONSTRUCTION SHALL NOT COMMENCE UNTIL ALL SOURCES OF SEDIMENT HAVE BEEN ELIMINATED, FINAL ROADSIDE VEGETATION IS ESTABLISHED AND USE OF TEMPORARY BASINS IS NO LONGER REQUIRED AS DIRECTED BY THE ENGINEER. ANY ISSUES RELATING TO EROSION AND/OR SEDIMENT TRANSPORT INTO WETLAND AREAS RESULTING FROM SUCH USE OF SEDIMENTATION BASINS DURING CONSTRUCTION SHALL BE THE RESPONSIBILTY OF THE CONTRACTOR. ANY CORRECTIVE ACTION REQUIRED TO RESOLVE SUCH ISSUES SHALL BE COMPLETED BY THE CONTRACTOR.

17. THE TOE OF ANY FILL SLOPE IS TO REMAIN AT LEAST 1' INSIDE OF ALL EROSION CONTROLS. UNDER NO CIRCUMSTANCES SHALL THE CONTRACTOR COVER ANY PORTION OF THE EROSION CONTROL MEASURES WITH MATERIAL. ANY MATERIAL THAT IS PLACED ON ANY EROSION CONTROLS BY THE CONTRACTOR, OR ANY AGENT OF THE CONTRACTOR, SHALL BE IMMEDIATELY REMOVED BY THE CONTRACTOR, AND ANY NECESSARY REPAIRS TO THE EROSION CONTROLS ACCOMPLISHED.

18. PRIOR TO COMMENCING CONSTRUCTION ACTIVITIES, EROSION AND SEDIMENTATION CONTROLS SHALL BE INSTALLED AT THOSE AREAS INDICATED ON THE PLANS. CLEARING MAY OCCUR PRIOR TO INSTALLATION OF SUCH CONTROLS, HOWEVER NO GRUBBING, GRADING, FILLING, OR OTHER SOIL DISTURBANCE SHALL OCCUR PRIOR TO INSTALLATION. THE LIMITS OF CLEARING AND SURFACE DISTURBANCE MUST BE STRICTLY ADHERED TO IN ALL AREAS.

19. ALL HAY BALES, SILT FENCE OR TEMPORARY PROTECTION SHALL REMAIN IN PLACE UNTIL AN ACCEPTABLE STAND OF GRASS IS ESTABLISHED. IF NEEDED, TEMPORARY SEEDING CAN HELP TO MINIMIZE EROSION. TEMPORARY SEED WILL CONFORM TO R.I.D.O.T. STANDARD TEMPORARY SEED MIX.

20. THE CONTRACTOR MUST REPAIR AND/OR RESEED ANY AREAS THAT DO NOT DEVELOP WITHIN THE PERIOD OF ONE YEAR AND HE SHALL DO SO AT NO ADDITIONAL EXPENSE TO THE STATE.

21. THE NORMAL ACCEPTABLE SEASONAL SEEDING DATES ARE SPECIFIED IN SUBSECTION L.02.03 OF THE R.I.D.O.T. STANDARD SPECIFICATIONS, LATEST EDITION.

22. ADDITIONAL EROSION CONTROLS, SHALL BE INSTALLED AS DIRECTED BY THE RESIDENT ENGINEER. THESE ADDITIONAL ITEMS WILL BE PAID AT THE UNIT PRICE FOR THAT BID ITEM.

UTILITY NOTES:

1. EXISTING UTILITIES HAVE BEEN SHOWN ON THE PLANS USING THE BEST AVAILABLE INFORMATION AND ARE APPROXIMATE. BUILDING SERVICE CONNECTIONS (ELECTRIC, GAS, TELEPHONE, WATER AND SANITARY) ARE NOT SHOWN. CONTRACTOR IS TO ASSUME SERVICES ARE PRESENT TO ALL BUILDINGS.

2. THE CONTRACTOR SHALL VERIFY THE LOCATIONS OF ALL EXISTING DRAINAGE AND UTILITIES BOTH UNDERGROUND AND OVERHEAD BEFORE EXCAVATION BEGINS IN ACCORDANCE WITH CHAPTER 39–1.2 OF THE R.I. GENERAL LAWS ENTITLED "EXCAVATION NEAR UNDERGROUND UTILITY FACILITIES", WITH AMENDMENTS EFFECTIVE AS OF NOVEMBER 1, 2009 AND, WHEN NECESSARY, BY CONTACTING THE INDIVIDUAL UTILITY COMPANIES. EXCAVATION SHALL BE IN ACCORDANCE WITH ALL STATUTES, ORDINANCES, RULES AND REGULATIONS OF ANY APPLICABLE CITY, TOWN, STATE OR FEDERAL AGENCY. THE CONTRACTOR SHOULD UNDERSTAND THAT NOT ALL UTILITIES SUBSCRIBE TO THE DIG SAFE PROGRAM. IT IS THE CONTRACTOR'S RESPONSIBILITY TO NOTIFY ALL UTILITY COMPANIES AND ENSURE THAT ALL UTILITIES HAVE BEEN MARKED PRIOR TO COMMENCING THEIR WORK. ANY DAMAGE TO EXISTING UTILITIES MARKED IN THE FIELD, OR AS A RESULT OF FAILING TO CONTACT THE APPROPRIATE UTILITY COMPANY, SHALL BE REPAIRED OR REPLACED AT NO ADDITIONAL COST TO THE STATE.

3. ALL EXISTING UTILITIES TO BE ABANDONED SHALL BE CAPPED.

4. EXISTING WATER SERVICES SHALL BE RECONNECTED TO THE NEW WATER MAINS.

5. UTILITY SERVICE CONNECTIONS SHALL BE MAINTAINED TO ALL EXISTING FACILITIES TO REMAIN.

6. FIRE HYDRANTS SHALL NOT BE REMOVED FROM SERVICE WITHOUT WRITTEN AUTHORIZATION FROM THE FIRE DEPARTMENT OR THE WATER AUTHORITY.

7. ALL NEW WATER LINES SHALL BE DISINFECTED TO THE SATISFACTION OF THE WATER AUTHORITY IN ACCORDANCE WITH THE SPECIFICATIONS.

8. ALL UTILITY POLE RELATED WORK SHALL BE BY OTHERS.

REVISIONS		
NO.	DATE	BY
1	4/07	TRB
2	3/10	RBH
3	4/14	MLP

COMMONWEALTH
ENGINEERS & CONSULTANTS, INC.
400 SMITH STREET
PROVIDENCE, RI 02908

RHODE ISLAND
DEPARTMENT OF TRANSPORTATION

STATEWIDE BRIDGE REPAIRS
CONTRACT 4 - AMTRAK BRIDGES

RHODE ISLAND

STANDARD NOTES - 1

CHECKED BY _____ DATE _____ SCALE NO SCALE

0113R_V1_003_STDNOTES001

FED. ROAD DIV. NO.	STATE	FEDERAL AID PROJECT NO.	FISCAL YEAR	SHEET NO.	TOTAL SHEETS
–	RI	–	2019	4	82

LANDSCAPE NOTES:

1. ALL PLANT MATERIAL MUST BE TAGGED AT THE NURSERY (A RECOGNIZED GROWER OF PLANT MATERIAL) IN ACCORDANCE WITH THE R.I.D.O.T. STANDARD SPECIFICATIONS, LATEST EDITION. ALL PLANT MATERIAL MUST BE NURSERY GROWN; NO PLANTATION GROWN PLANT MATERIAL WILL BE ACCEPTED.
2. ALL PLANT SUBSTITUTIONS AND/OR CHANGES IN PLANT LOCATION MUST BE APPROVED IN ACCORDANCE WITH THE R.I.D.O.T. STANDARD SPECIFICATIONS, LATEST EDITION.
3. ALL PLANT MATERIAL IS TO BE FIELD LOCATED BY A REPRESENTATIVE FROM THE R.I.D.O.T. LANDSCAPE ARCHITECTURE UNIT.
4. A R.I.D.O.T. LANDSCAPE REPRESENTATIVE MUST BE ON SITE TO APPROVE ALL TRIMMING AND CLEARING NECESSARY TO COMPLETE THE WORK AS SHOWN ON THE PLANS.
5. ANY TOPSOIL USED AS PLANTABLE SOIL SHALL HAVE A SANDY LOAM TEXTURE RELATIVELY FREE OF SUBSOIL MATERIAL, STONES, ROOTS, LUMPS OF SOIL, TREE LIMBS, TRASH OR CONSTRUCTION DEBRIS, AND SHALL CONFORM TO SECTION M.18 OF THE R.I.D.O.T. STANDARD SPECIFICATIONS, LATEST EDITION.
6. ALL TREES AND SHRUBS SHALL BE MULCHED WITH PINE BARK MULCH IN ACCORDANCE WITH THE R.I.D.O.T. STANDARD SPECIFICATIONS, LATEST EDITION.
7. ALL TREES AND/OR SHRUBS THAT ARE PLANTED AS A BED SHALL BE MULCHED AS A BED.
8. PROVIDE A MINIMUM 6'–8" BRANCHING STANDARD ON ALL TREES INSTALLED ADJACENT TO SIDEWALKS AND/OR PEDESTRIAN ACCESS AREAS.

STRUCTURAL NOTES FOR HIGHWAY SIGNS, LUMINAIRES AND TRAFFIC SIGNALS:

GENERAL

1. ALL SUPPORT DESIGNS AND ASSOCIATED SHOP DRAWING REVIEWS SHALL BE IN CONFORMANCE WITH THE LATEST EDITION, OF THE AASHTO STANDARD SPECIFICATIONS FOR STRUCTURAL SUPPORTS FOR HIGHWAY SIGNS, LUMINAIRES AND TRAFFIC SIGNALS (THE "SPECIFICATIONS"), INCLUDING THE LATEST INTERIM SPECIFICATIONS, EXCEPT AS MODIFIED HEREIN.

CONSTRUCTION DRAWINGS AND DETAILS

1. THE FOLLOWING NOTES SHALL BE INCLUDED ON ALL PLANS AND/OR SHOP DRAWINGS IN REFERENCE TO ANCHOR BOLTS:
   - "PRETENSIONING OF ALL ANCHOR NUTS IS REQUIRED, AND SHALL BE ACCOMPLISHED BY TIGHTENING TO 1/6TH TURN BEYOND THE SNUG–TIGHT POSITION."
   - "THE MAXIMUM CLEARANCE BETWEEN THE BOTTOM OF THE LEVELING NUTS AND THE TOP OF THE CONCRETE IS CRITICAL AND SHALL NOT EXCEED THE AMOUNT SPECIFIED ON THIS DRAWING."
2. THE USE OF GROUT UNDER BASE PLATES SHALL GENERALLY NOT BE PERMITTED. IF SPECIFIC CONDITIONS WARRANT ITS USE, THE GROUT SHALL NOT BE CONSIDERED LOAD CARRYING; LOADS SHALL BE DIRECTLY SUPPORTED BY THE ANCHOR BOLTS. ADEQUATE DRAINAGE SHALL BE PROVIDED.
3. THE DAMPENING EFFECTS OF VIBRATION MITIGATION DEVICES SHALL NOT BE CONSIDERED IN THE DESIGN OF STRUCTURAL SUPPORTS FOR SIGNS AND TRAFFIC SIGNALS. IF THE CONTRACTOR CHOOSES TO USE THESE DEVICES FOR WARRANTY PURPOSES, THE TYPE OF DEVICES PROPOSED SHALL BE APPROVED BY THE DEPARTMENT PRIOR TO FABRICATION OF SUPPORTS.

TRAFFIC SIGNAL NOTES:

1. ALL SALVAGED TRAFFIC SIGNAL EQUIPMENT SHALL BE DELIVERED TO THE R.I.D.O.T. MAINTENANCE HEADQUARTERS, 360 LINCOLN AVENUE, WARWICK, RHODE ISLAND, 02888.
2. BACK PLATES SHALL BE INSTALLED ON ALL TRAFFIC SIGNAL HEADS.
3. THE CONTRACTOR SHALL SUPPLY AND INSTALL ON THE UPPER LEFT HAND CORNER OF THE BACK OF THE CONTROLLER CABINET DOOR A LAMINATED INTERSECTION GRAPHIC AND TABLE DEPICTING THE TRAFFIC DETECTOR RELAY CHANNEL ASSIGNMENTS. THE DIAGRAM SHALL BE A GRAPHIC OF THE INDIVIDUAL INTERSECTION ORIENTED SIMILAR TO THE PLANS SHOWING THE LOCATIONS OF EACH OF THE LOOP DETECTORS. THE DIAGRAM SHALL, AT A MINIMUM, INCLUDE DETECTOR NUMBERS, STREET NAME LABELS, NORTH ARROW, AND CONTROLLER CABINET LOCATION. THE ASSIGNMENT INFORMATION SHALL BE INCLUDED IN A TABLE WHICH SHALL INCLUDE, AT A MINIMUM, THE APPROACH NAME, DETECTOR NUMBER, TERMINAL NUMBER, DETECTOR RACK SLOT NUMBER, RELAY NUMBER, RELAY CHANNEL NUMBER, AND PHASE ASSOCIATED WITH EACH DETECTOR.
4. TRAFFIC CONTROLLER CABINETS, UNLESS OTHERWISE NOTED, SHALL BE NEMA TS2 TYPE 1 CABINET SIZE 6 ("P" TYPE) WITH NOMINAL DIMENSIONS OF 52"Hx44"Wx24"D.
5. ALL DELAY AND EXTENSION TIMES, AS CALLED FOR ON THE PLANS, FOR PROPOSED LOOP DETECTORS SHALL BE PROGRAMMED IN THE TRAFFIC SIGNAL CONTROLLER AND NOT THE DETECTOR RELAY.
6. A BARE GROUND WIRE SHALL BE PLACED IN ALL PVC CONDUITS AND SHALL BE BONDED TO GROUND RODS IN ACCORDANCE WITH SECTION T.03 OF THE RHODE ISLAND DEPARTMENT OF TRANSPORTATION STANDARD SPECIFICATIONS FOR ROAD AND BRIDGE CONSTRUCTION.
7. THE FINAL POSITION OF SIGNAL HEADS, PEDESTRIAN PUSHBUTTONS, DETECTORS, AND STOP LINE AND CROSSWALK PAVEMENT MARKINGS SHALL BE AS DIRECTED BY THE ENGINEER IN THE FIELD ACCORDING TO ACTUAL INTERSECTION CHARACTERISTICS.
8. A 2' MINIMUM BUFFER SHALL BE PROVIDED BETWEEN THE CURB AND ALL LATERAL OBSTRUCTIONS (INCLUDING ALL SIGNAL POLES AND TRAFFIC/PEDESTRIAN SIGNAL HEADS) TO PROVIDE ADEQUATE CLEARANCE FOR TURNING VEHICLES.
9. ALL FOUNDATIONS MUST HAVE CONES OR BARRELS BOLTED TO FOUNDATION BASES UNTIL ACTUAL POLE IS INSTALLED.
10. WHEN PLACING TRAFFIC SIGNAL HANDHOLES OR CONDUIT IN EXISTING PORTLAND CEMENT CONCRETE SIDEWALKS, THE ENTIRE SIDEWALK SQUARE OF CONCRETE SHALL BE REPLACED IN ACCORDANCE WITH R.I. STD. 43.1.0. NO PATCHES WILL BE ALLOWED.
11. ALL PEDESTRIAN PUSHBUTTONS SHALL BE COMPLIANT WITH "THE AMERICANS WITH DISABILITIES ACT ACCESSIBILITY GUIDELINES FOR BUILDINGS AND FACILITIES" (ADAAG) AND SHALL INCLUDE A PRESSURE–ACTIVATED (NON–MOVING) BUTTON. SIGNS APPLICABLE TO PUSHBUTTON ACTUATION SHALL BE INSTALLED SUCH THAT THE CROSSING ASSIGNED TO EACH BUTTON IS CLEARLY INDICATED. IF SITE CONDITIONS DO NOT ALLOW PEDESTRIAN PUSHBUTTONS TO BE INSTALLED WHERE CALLED FOR ON THE PLANS, THE R.I.D.O.T. TRAFFIC ENGINEERING UNIT SHALL BE CONSULTED WITH THROUGH AN R.F.I. PRIOR TO INSTALLING THE PUSHBUTTONS. THE FINAL PLACEMENT OF ALL PEDESTRIAN PUSHBUTTONS SHALL BE IN ACCORDANCE WITH ADAAG AND THE MANUAL ON UNIFORM TRAFFIC CONTROL DEVICES, LATEST EDITION.
12. ALL LOOP DETECTORS SHALL BE CENTERED WITHIN EACH LANE AS DELINEATED, UNLESS OTHERWISE DIMENSIONED ON PLANS.
13. ALL LOOP DETECTORS SHALL BE CUT INTO THE FINAL PAVEMENT SURFACE COURSE.
14. TRAFFIC SIGNAL CONTROLLERS SHALL BE WIRED SO THAT ANY FIRE PRE–EMPTION SHALL OVERRIDE MANUAL (PUSH BUTTON) OPERATION.
15. THE CONTRACTOR SHALL WORK CONTINUOUSLY TO RESTORE TRAFFIC SIGNAL OPERATION TO ITS INTENDED PURPOSE WHEN REPLACING THE TRAFFIC SIGNAL EQUIPMENT. A POLICE DETAIL IS REQUIRED TO DIRECT TRAFFIC AT THE INTERSECTION AT ALL TIMES WHEN THE TRAFFIC SIGNAL IS INOPERATIVE. AT NO TIME SHALL THE CONTRACTOR LEAVE THE SITE BEFORE RESTORING FULL TRAFFIC OPERATIONS.

MAINTENANCE AND PROTECTION OF TRAFFIC NOTES:

1. ALL MAINTENANCE AND PROTECTION OF TRAFFIC CONTROL SETUPS, SIGNS, CHANNELIZING DEVICES, ETC., SHALL BE IN ACCORDANCE WITH THE MANUAL ON UNIFORM TRAFFIC CONTROL DEVICES, LATEST EDITION.
2. ALL SIGN MOUNTINGS FOR TEMPORARY AND CONSTRUCTION SIGNS SHALL BE IN ACCORDANCE WITH THE R.I.D.O.T. STANDARD SPECIFICATIONS, LATEST EDITION.
3. THE CONTRACTOR SHALL COVER ALL EXISTING AND/OR TEMPORARY SIGNS THAT ARE NOT RELEVANT TO THE TRAFFIC CONTROL REQUIRED DURING ANY PARTICULAR STAGE OF THE CONTRACT.
4. ADVANCE FLAGPERSON SIGNS (W20–7A) SHALL BE USED IN ADVANCE OF ANY POINT AT WHICH A FLAGPERSON OR A POLICE OFFICER HAS BEEN STATIONED TO CONTROL TRAFFIC. WHEN NEEDED, AN APPROPRIATE DISTANCE MESSAGE MAY BE DISPLAYED ON A SUPPLEMENTAL PLATE (24"x18") BELOW THE FLAGPERSON SYMBOL SIGN. THE SIGN SHALL BE PROMPTLY REMOVED OR COVERED WHENEVER THE FLAGPERSON IS NOT AT THE STATION.
5. POLICE OFFICERS (AND NOT FLAGPERSONS) SHALL BE UTILIZED WHEN WORK WILL IMPACT SIGNALIZED INTERSECTIONS AND LIMITED ACCESS HIGHWAYS.
6. POLYETHYLENE DRUMS SHALL BE UTILIZED AS A CHANNELIZING DEVICE WHEN A TRAFFIC CONTROL SET–UP IS TO REMAIN BEYOND WORKING HOURS WHEN NO WORKERS ARE PRESENT. CONES SHALL BE UTILIZED WHEN A TRAFFIC CONTROL SET–UP IS TO REMAIN ONLY DURING WORKING HOURS AND IS SUBSEQUENTLY BROKEN DOWN AT THE END OF THE WORKDAY.
7. ARROW PANELS SHALL BE SET IN THE FLASHING FOUR CORNERS CAUTION MODE UNLESS UTILIZED FOR A MERGING TAPER. ARROW PANELS SET IN THE FLASHING ARROW MODE SHALL NOT BE UTILIZED FOR LANE SHIFTS.
8. TEMPORARY CONSTRUCTION SIGNS AND OTHER WORKZONE TRAFFIC CONTROL DEVICES THAT ARE DAMAGED OR REQUIRE RELOCATION SHALL BE REPLACED AND / OR RELOCATED UNDER THE PAY ITEM FOR "MAINTENANCE AND MOVEMENT TRAFFIC PROTECTION."
9. THE PRIVATE VEHICLES OF CONSTRUCTION WORKERS SHALL NOT BE PARKED ON THE TRAVEL LANES OR SHOULDERS. THEY MAY BE PARKED WITHIN THE STATE RIGHT–OF–WAY ONLY IN AREAS 30' BEYOND THE OUTSIDE EDGE OF THE TRAVEL LANES AND/OR IN AREAS APPROVED BY THE ENGINEER.
10. TEMPORARY CONSTRUCTION SIGNS AND OTHER TEMPORARY TRAFFIC CONTROL DEVICES SHALL BE INSTALLED PRIOR TO THE START OF WORK IN ANY AREA OPEN TO TRAFFIC, AND SHALL BE REMOVED AS SOON AS PRACTICAL WHEN THEY ARE NO LONGER APPROPRIATE.
11. THE INTENDED VEHICLE PATHS THROUGH EACH WORK ZONE SHALL BE CLEARLY MARKED AT ALL TIMES. WATERBORNE PAVEMENT MARKINGS SHALL BE INSTALLED BEFORE THE END OF THE WORK SHIFT ON ALL COLD–PLANED AND NEW ROADWAY SURFACES THAT WILL BE OPENED TO TRAFFIC AT THE END OF THE SHIFT.

REVISIONS		
NO.	DATE	BY
1.	4/07	TRB
2.	11/07	TRB
3	3/10	RBH

RHODE ISLAND
DEPARTMENT OF TRANSPORTATION

STATEWIDE BRIDGE REPAIRS
CONTRACT 4 - AMTRAK BRIDGES

RHODE ISLAND

STANDARD NOTES - 2

COMMONWEALTH
ENGINEERS & CONSULTANTS, INC.
400 SMITH STREET
PROVIDENCE, RI 02908

CHECKED BY _____ DATE _____ SCALE NO SCALE

FED. ROAD DIV. NO.	STATE	FEDERAL AID PROJECT NO.	FISCAL YEAR	SHEET NO.	TOTAL SHEETS
–	RI	–	2019	5	82

LIST OF ABBREVIATIONS

A

ABUTMENT	= ABUT.
ADDITIONAL	= ADD'L
ALTERNATE	= ALT.
ANCHOR BOLT	= A.B.
AND	= &
APPROACH	= APPR.
APPROVED	= APPD.
APPROXIMATE	= APPROX.
AT EACH	= @
AVENUE	= AVE.
AVERAGE	= AVG.

B

BACK TO BACK	= B TO B
BASELINE	= ℄
BEAM	= BM.
BETWEEN	= BTWN
BEARING	= BRG.
BITUMINOUS	= BIT.
BUILDING	= BLDG.
BUILDING LINE	= B.L.
BOLT CIRCLE	= B.C.
BOTTOM	= BOT.
BOTTOM OF	= B.O.

C

CENTER TO CENTER	= C TO C
CENTERLINE	= ℄
CIRCLE	= CIR.
CLEARANCE	= CL.
COLUMN	= COL.
CONCRETE	= CONC.
CONDUIT	= COND.
CONNECTION	= CONN.
CONSTRUCTION	= CONST.
CONTRACTION	= CONTR.
COUNTERSINK	= CSK.
COUPLING	= CPLG.
CLASS I CONTROLLED LOW STRENGTH MATERIAL	= CLMS
CUBIC FEET	= C.F.

D

DETAIL	= DET.
DIAGONAL	= DIAG.
DIAPHRAGM	= DIAPHM.
DIAMETER	= DIA.
DIMENSION	= DIM. OR ø
DOWN	= DN.
DRAWING	= DWG.
DRAIN	= DR.

E

EACH	= EA.
EACH FACE	= E.F.
EAST	= E.
ELEVATION	= EL. OR ELEV.
EMBEDMENT	= EMBED.
EXISTING	= EXIST.
EXPANSION	= EXP.
EQUAL	= EQ.

F

FAR FACE	= F.F.
FAR SIDE	= F.S.
FABRICATE	= FAB.
FACE TO FACE	= F TO F
FEET	= FT.
FLANGE	= FLG.
FLAT HEAD	= F.H.
FOOTING	= FTG.
FORCE MAIN	= FM
FOUNDATION	= FDN.
FURNISH, FABRICATE & ERECT	= F.F. & E.

G

GAGE	= GA.
GALVANIZE	= GALV.
GAS	= G
GRADE	= GR.
GRATING	= GRTG.
GROUND	= GND.

H

HEIGHT	= HGT.
HEXAGON	= HEX.
HIGHWAY	= HWY.
HIGH STRENGTH	= H.S.
HORIZONTAL	= HORIZ.

I

INCH	= IN.
INFORMATION	= INFO.
INSIDE DIAMETER	= I.D.
INVERT	= INV.

J

JOINT	= JT.

L

LENGTH	= LGTH. OR L
LENGTH OF VERTICAL CURVE	= L.V.C.
LEFT	= LT.
LIGHTING	= LTG.
LONG	= LG.
LOAD & RESISTANCE FACTOR DESIGN	= LRFD

M

MATERIAL	= MATL.
MAXIMUM	= MAX.
MEAN HIGH WATER	= M.H.W.
MEAN LOW WATER	= M.L.W.
MEAN SEA LEVEL	= M.S.L.
MECHANICAL	= MECH.
MINIMUM	= MIN.
MISCELLANEOUS	= MISC.

N

NEAR FACE	= N.F.
NEAR SIDE	= N.S.
NORTH	= N.
NOT TO SCALE	= N.T.S.
NUMBER	= NO. OR #

O

OBSERVED WATER	= O.W.
ON CENTER	= O.C.
OPENING	= OPNG.
OUTSIDE DIAMETER	= O.D.
OPTIONAL	= OPT.

P

PLATE	= ℙ
PLUS OR MINUS	= ±
POINT OF VERTICAL CURVATURE	= P.V.C.
POINT OF VERTICAL INTERSECTION	= P.V.I.
POINT OF VERTICAL TANGENCY	= P.V.T.
POLYVINYL CHLORIDE	= PVC
POINT OF TANGENCY	= P.T.
POUNDS	= LBS
POUNDS PER SQUARE INCH	= P.S.I.
POUNDS PER SQUARE FOOT	= P.S.F.
PRESTRESSED PRECAST CONCRETE	= P.P.C.
PRECAST CONCRETE	= P.C.

R

RADIUS	= RAD. OR R
RAILROAD	= RR
REQUIRED	= REQD.
REINFORCING	= REINF.
REHABILITATION	= REHAB.
REMOVE & DISPOSE	= R & D
RIGHT	= RT.

S

SECTION	= SECT.
SCHEDULE	= SCH.
SCHEMATIC	= SCHEM.
SHEET	= SH.
SIDEWALK	= S.W.
SOUTH	= S.
SPACES	= SP.
STANDARD	= STD.
STATION	= STA.
SYMMETRICAL	= SYM.
STAY IN PLACE	= S.I.P.
SQUARE	= SQ.

T

TOP	= T
TOP AND BOTTOM	= T&B
TOP OF	= T.O.
THICK	= THK.
TYPICAL	= TYP.

U

UNLESS NOTED OTHERWISE	= U.N.O.

V

VARIES	= VAR.
VERTICAL CURVE	= V.C.
VERTICAL	= VERT.

W

WATER	= W
WELDED WIRE FABRIC	= W.W.F.
WEST	= W.
WITH	= W/
WIDE FLANGE	= W.F.
WORKING POINT	= W.P.

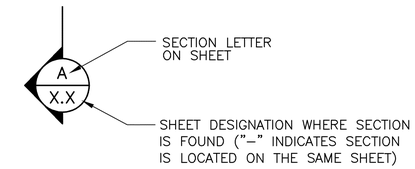

SECTION MARK

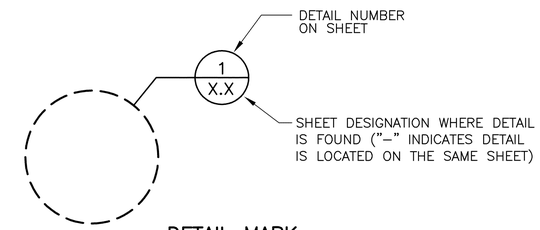

DETAIL MARK

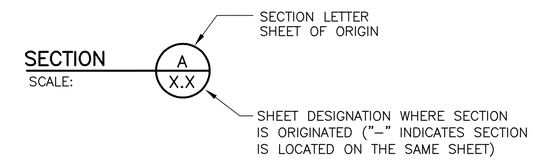

SECTION TITLE

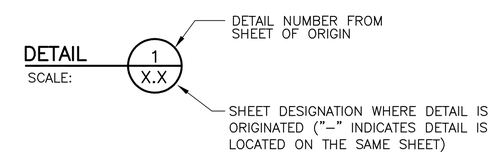

DETAIL TITLE

SECTION & DETAIL DESIGNATIONS

REVISIONS		
NO.	DATE	BY

COMMONWEALTH ENGINEERS & CONSULTANTS, INC.
400 SMITH STREET
PROVIDENCE, RI 02908

RHODE ISLAND
DEPARTMENT OF TRANSPORTATION

STATEWIDE BRIDGE REPAIRS
CONTRACT 4 - AMTRAK BRIDGES

RHODE ISLAND

LIST OF ABBREVIATIONS

CHECKED BY _____ DATE _____ SCALE NONE

0113R_V1_005_ABBREV

FED. ROAD DIV. NO.	STATE	FEDERAL AID PROJECT NO.	FISCAL YEAR	SHEET NO.	TOTAL SHEETS
–	RI	–	2019	6	82

ALL REFERENCES IN THESE GENERAL NOTE SHEETS AND THROUGHOUT THE CONTRACT DRAWINGS TO THE RHODE ISLAND STANDARD SPECIFICATIONS FOR ROAD AND BRIDGE CONSTRUCTION SHALL EXCLUDE THE METHOD OF MEASUREMENT SECTION AND THE BASIS OF PAYMENT SECTION FOR ITEMS PAID FOR UNDER VARIOUS LUMP SUM ITEMS UNDER THIS CONTRACT.

GENERAL NOTES

1. ALL CONSTRUCTION INDICATED ON THESE PLANS SHALL BE IN ACCORDANCE WITH:
   - THE RHODE ISLAND DEPARTMENT OF TRANSPORTATION STANDARD SPECIFICATIONS FOR ROAD AND BRIDGE CONSTRUCTION (RI STANDARD SPECIFICATIONS), AMENDED AUGUST 2013, WITH ALL REVISIONS.
   - THE AMERICAN ASSOCIATION OF STATE HIGHWAY AND TRANSPORTATION OFFICIALS (AASHTO) LRFD BRIDGE CONSTRUCTION SPECIFICATIONS, 3rd, EDITION, 2010, INCLUDING THE LATEST INTERIM REVISIONS.
   - THE SPECIFICATIONS ACCOMPANYING THESE PLANS.
2. DIMENSION, STATIONS, ELEVATIONS, AND ANGLES OF THE EXISTING STRUCTURE HAVE BEEN OBTAINED FROM PLANS OF THE ORIGINAL CONSTRUCTION. THE CONTRACTOR SHALL VERIFY ALL DIMENSIONS REQUIRED FOR PROPER PERFORMANCE OF THE WORK. FIELD CONDITIONS MAY EXIST WHICH DEVIATE FROM THE DIMENSIONS SHOWN ON THESE PLANS. THE CONTRACTOR SHALL BE SOLELY RESPONSIBLE FOR FABRICATION AND FIT OF HIS WORK.
3. THE BASE OF LEVELS, TO WHICH PLAN ELEVATIONS ARE REFERENCED, ARE BASED ON THE ORIGINAL CONSTRUCTION PLANS, INCLUDED WITHIN THE CONTRACT DOCUMENTS.
4. ALL WORKING POINTS ARE SHOWN AT THE CENTERLINES OF BEARINGS OF ABUTMENTS AND AT THE CENTERLINES OF PIERS, UNLESS OTHERWISE NOTED.
5. ALL ABUTMENTS AND WALLS ARE DRAWN LOOKING AT THE EXPOSED FACES.
6. THE EXISTING UTILITIES SHOWN ON THE PLANS ARE APPROXIMATE AND MAY BE INCOMPLETE. NO BUILDING SERVICE CONNECTIONS (ELECTRIC, TELEPHONE, GAS, WATER, SANITARY AND OTHERS) ARE SHOWN. THE CONTRACTOR IS TO ASSUME THAT SERVICES TO ALL BUILDINGS ARE PRESENT. (REFER TO "UTILITY NOTES" ON "STANDARD NOTES - 1" SHEET.)
7. BOTH FEDERAL AND STATE LAW (RI. GENERAL LAW 39-1.2) REQUIRE NOTIFICATION OF APPROPRIATE UTILITY COMPANIES BEFORE DIGGING, TRENCHING, BLASTING, DEMOLISHING, BORING, BACK FILLING, GRADING, LANDSCAPING, OR OTHER EARTH MOVING OPERATIONS. IT IS THE CONTRACTOR'S RESPONSIBILITY TO NOTIFY ALL UTILITY COMPANIES (INCLUDING THROUGH THE "DIG SAFE" PROGRAM) TO ENSURE THAT ALL UTILITIES, BOTH UNDERGROUND AND OVERHEAD, HAVE BEEN MARKED BEFORE COMMENCEMENT OF SUCH WORK. THE CONTRACTOR SHOULD UNDERSTAND THAT NOT ALL UTILITIES SUBSCRIBE TO THE "DIG SAFE" PROGRAM. ANY DAMAGE TO EXISTING UTILITIES MARKED IN THE FIELD, OR AS A RESULT OF FAILING TO CONTACT THE APPROPRIATE UTILITY COMPANIES, SHALL BE REPAIRED OR REPLACED (AS DEEMED APPROPRIATE BY THE STATE AND/OR THE IMPACTED UTILITY COMPANY) AT NO ADDITIONAL COST TO THE STATE. (REFER TO "UTILITY NOTES" ON "STANDARD NOTES - 1" SHEET.)

DESIGN DATA

1. DESIGN SPECIFICATIONS

- THE AASHTO LRFD BRIDGE DESIGN SPECIFICATIONS, 7th EDITION, 2014 , INCLUDING ALL INTERIM REVISIONS TO DATE.
- THE RHODE ISLAND LRFD BRIDGE DESIGN MANUAL 2007 EDITION INCLUDING ALL REVISIONS TO DATE.
- ALL OTHER APPLICABLE DESIGN SPECIFICATIONS ARE REFERENCED IN SECTION 1 OF THE RHODE ISLAND LRFD BRIDGE DESIGN MANUAL DATED 2007.
- THE RHODE ISLAND DEPARTMENT OF TRANSPORTATION STANDARD SPECIFICATIONS FOR ROAD AND BRIDGE CONSTRUCTION (RI STANDARD SPECIFICATIONS), AMENDED AUGUST 2013, WITH ALL REVISIONS.
- IN CASE OF CONFLICT, THE RHODE ISLAND LRFD BRIDGE DESIGN MANUAL SHALL GOVERN.

MATERIALS

STRUCTURAL STEEL:

- AASHTO DESIGNATION M 270, GRADE 36
- AASHTO DESIGNATION M 270, GRADE 50

REINFORCING STEEL:

- AASHTO DESIGNATION M 31, GRADE 60
- GALVANIZED COATING PER SECTION M.05.05 OF THE RI STANDARD SPECIFICATIONS

CONCRETE STRENGTHS:

- CLASS HP ¾" f'c=5,000 PSI
  BACKWALLS, BRIDGE DECKS, END POSTS, WALL STEMS, PIER CAP, PARAPETS, BRIDGE SIDEWALKS, BRIDGE SAFETY WALKS, BRIDGE BARRIERS
- CLASS XX ¾" f'c=4,000 PSI
  APPROACH SLABS

CONCRETE NOTES

1. CLASSES OF CONCRETE SHALL BE HIGH PERFORMANCE CLASS HP, AND CLASS XX, AS DESCRIBED IN THE RI STANDARD SPECIFICATIONS AND THE SPECIAL PROVISIONS OF THE SPECIFICATIONS. REFER TO THE "MATERIAL" NOTES FOR CLASSES OF CONCRETE SPECIFIED FOR VARIOUS COMPONENTS.
2. THE CONTRACTOR MAY, AT THE APPROVAL OF THE ENGINEER, PROPOSE THE USE OF SELF-CONSOLIDATING CONCRETE FOR ANY CLASS OF CONCRETE ON THIS PROJECT. SECTION 606 "SELF CONSOLIDATING CONCRETE (SCC)", CONTAINS THE REQUIREMENTS FOR MODIFYING ALL CLASSES OF CONCRETE MIX DESIGN FOR SELF-CONSOLIDATING APPLICATIONS.
3. ALL PORTLAND CEMENT CONCRETE SHALL BE AIR-ENTRAINED.
4. ALL REINFORCING STEEL SHALL BE GALVANIZED. ALL WIRE TIES AND MISCELLANEOUS HARDWARE USED FOR PLACEMENT OF GALVANIZED REINFORCING SHALL ALSO BE GALVANIZED. GALVANIZED COATING FOR REINFORCING STEEL SHALL CONFORM TO SECTION M.05.05 OF THE RI STANDARD SPECIFICATIONS.
5. ALL CRITICAL LAP SPLICES SHALL BE AS SHOWN ON THE PLANS. ALL SPLICES NOT SHOWN ON THE PLANS SHALL BE LAPPED IN ACCORDANCE WITH THE AASHTO LRFD BRIDGE DESIGN SPECIFICATIONS FOR CLASS C LAP SPLICES.
6. THE TOP BARS IN THE DECK SLABS SHALL BE SPLICED AT THE CENTER OF SPANS BETWEEN GIRDERS. THE BOTTOM BARS SHALL BE SPLICED OVER THE GIRDERS.
7. UNLESS OTHERWISE INDICATED ON THE PLANS, ALL MAIN REINFORCING BARS SHALL HAVE THE FOLLOWING MINIMUM COVER:

CONCRETE CAST AGAINST OR PERMANENTLY EXPOSED TO EARTH (FOOTINGS, ABUTMENT AND WALL FACES, BACKWALLS)		3"
DECK SLABS (WITH WEARING SURFACE)	TOP	2" (+1/4",-0")
	BOTTOM	1" (+1/8",-0"')
ALL OTHER BARS		2"

8. HORIZONTAL CONSTRUCTION JOINTS OTHER THAN THOSE SHOWN ON PLANS WILL NOT BE PERMITTED WITHOUT A WRITTEN REQUEST BY THE CONTRACTOR AND PRIOR AUTHORIZATION BY THE ENGINEER.
9. UNLESS OTHERWISE NOTED ON THE PLANS, ALL EXPOSED CONCRETE SURFACES VISIBLE IN ELEVATION TO ONE FOOT BELOW FINAL GROUND LINE (AND THE UNDERSIDE OF ALL CONCRETE DECK SLABS OUTSIDE OF THE FASCIA BEAMS), SHALL RECEIVE A CONCRETE RUBBED FINISH IN ACCORDANCE WITH THE RI STANDARD SPECIFICATIONS.
10. ALL EXPOSED EDGES AND REENTRANT CORNERS NOT OTHERWISE DETAILED ON THE PLANS SHALL HAVE A MINIMUM ¾" CHAMFER.
11. ALL JOINT SEALANT SHALL BE POLYURETHANE, POLYURETHANE ELASTOMERIC, OR SILICONE SEALANT AS DESIGNATED ON THE PLANS. THE COLOR OF THE JOINT SEALANT, WHERE EXPOSED, SHALL BE NEUTRAL (LIGHT GRAY OR TAN). THE COLOR OF THE SEALANT, WHERE NOT EXPOSED, WILL BE AT THE DISCRETION OF THE CONTRACTOR.
12. THE CONTRACTOR SHALL BE RESPONSIBLE FOR PREVENTING CONCRETE STAINS OR DISCOLORATIONS DURING CONSTRUCTION UNTIL SUCH TIME WHEN THE SURFACES ARE APPROVED AND ACCEPTED. ANY CONCRETE STAINS OR DISCOLORATIONS OCCURRING PRIOR TO ACCEPTANCE OF THE SURFACES SHALL BE REMOVED BY THE CONTRACTOR AT NO ADDITIONAL COST TO THE STATE.
13. UNLESS OTHERWISE NOTED ON THE PLANS, JOINT FILLER IS TO BE A PREFORMED, NON-EXPANSIVE, NON-EXTRUDING TYPE IN ACCORDANCE WITH SECTION M.02.11.1 OF THE RI STANDARD SPECIFICATIONS.

14 PLACEMENT, FINISHING AND CURING OF BRIDGE DECK CONCRETE SHALL BE IN ACCORDANCE WITH SECTION 814 OF THE RI STANDARD SPECIFICATIONS EXCEPT THAT SELF-PROPELLED FINISHING MACHINES ARE NOT REQUIRED. NO CONSTRUCTION LOADS, HEAVY EQUIPMENT, OR TRAFFIC WILL BE PERMITTED ON THE NEWLY PLACED DECK UNTIL THE DECK HAS CURED A MINIMUM OF 28 DAYS AND HAS ATTAINED A COMPRESSIVE STRENGTH OF 5,000 PSI.

15 UNLESS OTHERWISE INDICATED ON THE PLANS, ALL DECK FORMS SHALL BE OF THE REMOVABLE TYPE THAT WILL PRODUCE THE DIMENSIONS SHOWN ON THE PLANS.

16 EMBEDMENT LENGTHS FOR DRILLED AND GROUTED DOWELS SHALL BE IN ACCORDANCE WITH SECTION 819 OF THE RI STANDARD SPECIFICATIONS, UNLESS OTHERWISE SPECIFIED ON THESE PLANS.

17. IN ACCORDANCE WITH THE RI STANDARD SPECIFICATIONS, ALL METAL TIES OR ANCHORAGES WHICH ARE REQUIRED FOR CONCRETE FORMWORK SHALL BE SO CONSTRUCTED THAT THEY CAN BE REMOVED TO AT LEAST TWO INCHES BELOW THE EXPOSED SURFACE OF THE CONCRETE WITHOUT CAUSING DAMAGE TO THE CONCRETE SURFACE. SNAP TIES MAY BE USED ONLY IF APPROVED BY THE ENGINEER. IF THE CONTRACTOR PROPOSES TO USE THEM, A CATALOG CUT AND OTHER NECESSARY INFORMATION MUST BE SUBMITTED TO THE ENGINEER TO DEMONSTRATE THAT THE TIES WILL SNAP-OFF FAR ENOUGH INTO THE CONCRETE TO ALLOW FOR PROPER PATCHING. SNAP TIES MUST PROVIDE ADEQUATE STRENGTH TO SUPPORT THE FORMS. ALL CAVITIES SHALL BE FILLED WITH AN APPROVED CEMENT MORTAR MEETING THE REQUIREMENTS OF ASTM C 928.

CONCRETE REHABILITATION NOTES:

1. ALL CONCRETE REPAIR WORK SHALL BE IN ACCORDANCE WITH THE R.I. STANDARD SPECIFICATIONS SECTION 817, "REPAIRS TO STRUCTURE CONCRETE MASONRY" AND THE SPECIAL PROVISIONS CONTAINED IN THE CONTRACT SPECIFICATIONS.
2. ALL VISIBLY DETERIORATED CONCRETE SHALL BE REMOVED AT THE DIRECTION OF THE ENGINEER TO A SOUND CONCRETE SURFACE. THE ENGINEER SHALL BE THE SOLE JUDGE IN DETERMINING THE SOUNDNESS OF THE CONCRETE TO REMAIN.
3. IN AREAS WHERE REINFORCING STEEL IS FOUND TO BE SURROUNDED BY DETERIORATED CONCRETE OR WHERE AT LEAST ONE-HALF OF THE REBAR SURFACE AREA IS EXPOSED THE DEPTH OF CONCRETE REMOVAL SHALL BE SUCH AS TO INCLUDE ALL DETERIORATED CONCRETE BUT NOT LESS THAN THAT DEPTH NECESSARY TO ALLOW FOR ONE INCH MINIMUM ANNULAR CLEARANCE AROUND THE REINFORCING BAR.
4. AFTER REMOVAL HAS BEEN COMPLETED, ALL BOND INHIBITING MATERIALS SUCH AS LOOSELY BONDED AGGREGATES, DIRT, OR GREASE, SHALL BE REMOVED FROM THE SURFACE BY SANDBLASTING OR BY OTHER SUITABLE METHODS APPROVED BY THE ENGINEER.
5. IF THE CORRODED REINFORCING HAS LOST MORE THAN 25% OF ITS ORIGINAL DIAMETER, THE REINFORCING STEEL SHALL BE SUPPLEMENTED WITH NEW REINFORCING BY PLACING THE NEW BAR PARALLEL TO THE EXISTING REINFORCING. NEW BARS CONSIDERED MAIN REINFORCEMENT SHALL BE EXTENDED BEYOND THE AFFECTED AREA IN EACH DIRECTION BY THE REQUIRED LAP LENGTHS (30 BAR DIAMETERS). IF NECESSARY, ADDITIONAL CHIPPING WILL BE REQUIRED TO PROVIDE THIS LAP. THE SIZE OF THE SUPPLEMENTAL REINFORCING SHALL MATCH THE EXISTING REINFORCING.
6. ALL HEAVY OXIDES AND SCALES SHALL BE REMOVED FROM AFFECTED REINFORCING BY SANDBLASTING OR BY OTHER SUITABLE METHODS APPROVED BY THE ENGINEER IN ORDER TO PROMOTE MAXIMUM BOND OF THE NEW CONCRETE.
7. ALL REPAIRS TO STRUCTURAL CONCRETE MASONRY SHALL BE COMPLETED WITHIN TWO WEEKS AFTER REMOVAL OF DETERIORATED CONCRETE.
8. REPAIRED SURFACES SHALL BE FINISHED TO CLOSELY MATCH THE COLOR AND ORIGINAL CONTOUR OF SURFACES ADJOINING THE REPAIR AREAS. IF, IN THE OPINION OF THE ENGINEER, THE REPAIRED SURFACE DOES NOT CLOSELY MATCH THE ADJACENT UNREPAIRED SURFACE, THE REPAIR SHALL BE REMOVED AND THE REPAIR PROCESS REPEATED OR MODIFIED AS APPROVED BY THE ENGINEER. NO EXTRA COMPENSATION WILL BE FURNISHED TO THE CONTRACTOR FOR ANY REPEATED REPAIRS.

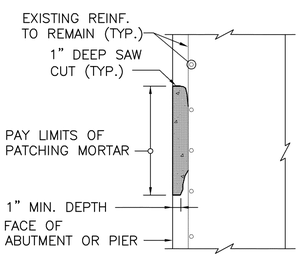

NOTE:
THIS REPAIR APPLIES TO AREAS WHERE NO MORE THAN ONE–HALF OF THE REBAR SURFACE IS ~~EXPOSED,~~ AND SURROUNDING CONCRETE IS SOUND.

REPAIR DEPTH TO REINFORCEMENT
(CODE 817.9901)

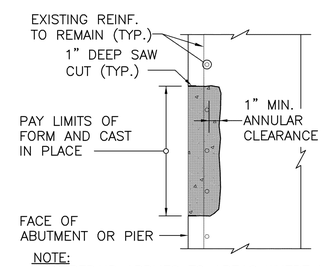

NOTE:
THIS REPAIR APPLIES TO AREAS WHERE MORE THAN ONE–HALF OF THE REBAR SURFACE IS EXPOSED. BARS HAVING LOST 1/4 OR MORE OF THEIR ORIGINAL DIAMETER SHALL BE SUPPLEMENTED BY NEW BARS PLACED PARALLEL TO EXISTING REINFORCING.

REPAIR DEPTH BEYOND REINFORCEMENT
(CODE 817.9902)

NOTES:

1. UNLESS NOTED OTHERWISE ON THE PLANS, REPAIRS TO STRUCTURAL CONCRETE MASONRY SHALL BE LIMITED TO VISIBLY DETERIORATED SUBSTRUCTURE CONCRETE ONLY, AS DIRECTED BY THE ENGINEER. HAMMERSOUNDING OF ALL SUBSTRUCTURE SURFACES IS NOT REQUIRED.
2. REPAIRS TO STRUCTURAL CONCRETE MASONRY SHALL BE MEASURED AND PAID FOR AT THE CONTRACT UNIT PRICE PER SQUARE FOOT UNDER ITEM CODES 817.9901 & 817.9902 BASED ON ACTUAL SUBSTRUCTURE SURFACE AREA REPAIRED COMPLETE AND ACCEPTED BY THE ENGINEER.

REPAIRS TO STRUCTURAL CONCRETE MASONRY
NOT TO SCALE

REVISIONS		
NO.	DATE	BY

COMMONWEALTH ENGINEERS & CONSULTANTS, INC.
400 SMITH STREET
PROVIDENCE, RI 02908

RHODE ISLAND
DEPARTMENT OF TRANSPORTATION

STATEWIDE BRIDGE REPAIRS
CONTRACT 4 - AMTRAK BRIDGES

RHODE ISLAND

BRIDGE GENERAL NOTES
SHEET 1

CHECKED BY _____ DATE _____ SCALE AS SHOWN

0113R_V1_006_STDBRNOT001

STRUCTURAL STEEL NOTES

1. FRAMING DIMENSIONS ARE GIVEN ALONG CENTERLINES OF BEAMS/GIRDERS AND ALONG CENTERLINES OF BEARINGS ON ABUTMENTS AND PIERS. THE CONTRACTOR/FABRICATOR IS RESPONSIBLE FOR FIELD VERIFICATION OF ACTUAL MEASUREMENTS THAT MAY IMPACT THE WORK PRIOR TO FABRICATION.

2. THE SHOPS FABRICATING THE STRUCTURAL STEEL FOR STEEL BEAM/GIRDERS REPAIRS MUST BE CERTIFIED FOR “SIMPLE STEEL BRIDGES (SBR)” IN ACCORDANCE WITH THE AISC QUALITY CERTIFICATION PROGRAM OR EQUIVALENT.

   THE SHOPS SHALL ALSO BE CERTIFIED UNDER THE AISC “SOPHISTICATED PAINT ENDORSEMENT (SPE)” QUALITY PROGRAM OR THE SSPC-QP3 PAINT CERTIFICATION PROGRAM.

   THE FABRICATOR MUST SUBMIT PROOF OF CURRENT CERTIFICATION AS SPECIFIED.

3. SHOP DRAWINGS FOR ALL FABRICATED STEEL INCLUDING FALSEWORK SHALL BE SUBMITTED TO THE ENGINEER IN SUFFICIENT TIME TO PERMIT CAREFUL CHECKING PRIOR TO FABRICATION.

4. INSPECTION OF WELDS INCLUDING RADIOGRAPHIC TESTING (RT) AND MAGNETIC PARTICLE TESTING (MT) SHALL BE IN ACCORDANCE WITH THE RI STANDARD SPECIFICATIONS AND THE AASHTO/AWS BRIDGE WELDING CODE, EXCEPT THAT THE REMAINING PERCENTAGE OF ALL GROOVE WELDS NOT RT TESTED SHALL BE MT OR DYE-PENETRANT TESTED.

5. STRUCTURAL STEEL SHAPES AND PLATES SHALL CONFORM TO THE LATEST PROVISIONS OF AASHTO DESIGNATION M 270 GRADE 36 OR 50 AS DESIGNATED ON THE PLANS.

6. ALL AASHTO M 270 STRUCTURAL STEEL USED IN GIRDERS (INCLUDING CONNECTION PLATES AND STIFFENERS), SHALL MEET THE ZONE 2 CHARPY V-NOTCH FRACTURE TOUGHNESS TEST REQUIREMENTS AS SPECIFIED IN TABLE 6.6.2-2 OF THE AASHTO LRFD BRIDGE DESIGN SPECIFICATIONS FOR “NONFRACTURE-CRITICAL” AND “FRACTURE-CRITICAL” COMPONENTS. THE ZONE 2 FRACTURE TOUGHNESS REQUIREMENTS ARE AS FOLLOWS:

   NONFRACTURE-CRITICAL

   GRADE 36 — 15 FT-LBS @ 40°F (UP TO 4 INCHES THICK)
   GRADE 50 — 15 FT-LBS @ 40°F (UP TO 2 INCHES THICK)
   20 FT-LBS @ 40°F (GREATER THAN 2", UP TO 4 INCHES THICK)

   FRACTURAL-CRITICAL

   GRADE 36 — 25 FT-LBS @ 40°F (UP TO 4 INCHES THICK)
   GRADE 50 — 25 FT-LBS @ 40°F (UP TO 2 INCHES THICK)
   30 FT-LBS @ 40°F (GREATER THAN 2", UP TO 4 INCHES THICK)

   SAMPLING AND TESTING PROCEDURES SHALL BE IN ACCORDANCE WITH AASHTO T 243. THE FREQUENCY OF TESTING SHALL BE IN ACCORDANCE WITH THE AASHTO LRFD BRIDGE DESIGN SPECIFICATIONS.

   THE CHARPY V-NOTCH FRACTURE TOUGHNESS TEST REQUIREMENT IS NOT MANDATORY FOR THE FOLLOWING STEEL COMPONENTS:

   - SUPPORT OF EXCAVATION COMPONENTS

7. WELDING SHALL BE IN ACCORDANCE WITH THE LATEST STRUCTURAL WELDING CODE AASHTO/AWS D1.5 (INCLUDING ALL INTERIMS TO DATE) AND APPLICABLE SUPPLEMENTAL AWS PUBLICATIONS.

8. ALL HIGH STRENGTH BOLTS SHALL CONFORM TO AASHTO DESIGNATION M 164, AND THEY SHALL BE INSTALLED IN ACCORDANCE WITH SECTION 824 OF THE RI STANDARD SPECIFICATIONS.

9. WASHERS MEETING AASHTO DESIGNATION M 293 ARE TO BE USED OVER ALL HOLES THAT ARE MORE THAN 1/16” IN DIAMETER GREATER THAN THE BOLT DIAMETER AND UNDER ALL PARTS TURNED DURING ASSEMBLY.

10. WELDING ELECTRODES SHALL HAVE THE SAME CORROSION RESISTANCE AS THE BASE METAL AND SHALL BE FREE OF MOISTURE AT THE TIME OF USE.

11. UNLESS OTHERWISE SPECIFIED, THE UPPER SURFACES OF GIRDER TOP FLANGES SHALL BE FREE OF PAINT, OIL OR OTHER IMPURITIES THAT WOULD IN ANY WAY REDUCE THE BOND OF CONCRETE TO STEEL.

12. PRIOR TO FABRICATION, ALL MATERIALS SHALL BE BLAST-CLEANED TO AT LEAST SSPC-SP6 TO REMOVE ALL OIL, DIRT, GREASE, MILL SCALE AND OTHER DELETERIOUS MATERIALS FROM THE SURFACES OF THE STEEL TO BE FABRICATED.

13. THE STEEL ERECTOR/CONTRACTOR FOR THIS PROJECT SHALL BE CERTIFIED FOR "CERTIFIED STEEL ERECTOR (CSE)" IN ACCORDANCE WITH THE AISC QUALITY CERTIFICATION PROGRAM. THE ERECTOR/CONTRACTOR OF THE STRUCTURAL STEEL SHALL BE REQUIRED TO SUBMIT PROOF OF CURRENT CERTIFICATION AS SPECIFIED.

14. PRIOR TO SHOP COATING AS SPECIFIED IN SECTION 825 OF THE RI STANDARD SPECIFICATIONS, ALL CORNERS AND EDGES OF STEEL WHICH HAVE BEEN FLAME CUT OR OTHERWISE HARDENED SHALL BE SOFTENED BY GRINDING OR BLAST-CLEANING TO PROVIDE A SURFACE SUITABLE FOR APPLICATION OF THE SPECIFIED PAINT SYSTEM.

15. WELDING OF ATTACHMENTS TO GIRDER FLANGES OR WEBS FOR CONSTRUCTION PURPOSES IS NOT PERMITTED EXCEPT WHEN APPROVED BY THE ENGINEER.

16. NO SHOP FILLET WELD SHALL BE LESS THAN ¼".

17. ALL SHEAR STUDS DAMAGED BY THE CONTRACTORS DEMOLITION PROCEDURE SHALL BE REPLACED AT NO COST TO THE STATE. ALL SHEAR STUD CONNECTORS SHALL BE WELDED BY THE AUTOMATIC TIMED ELECTRIC ARC PROCESS. SHEAR STUDS SHALL BE INSPECTED AND TESTED IN ACCORDANCE WITH SECTION 824 OF THE RI STANDARD SPECIFICATIONS.

18. WHEN STEEL DIE STAMPS ARE USED TO IDENTIFY PIECES AND MEMBERS, FABRICATORS SHALL UTILIZE LOW STRESS STAMPS.

REPAINTING OF EXISTING STRUCTURAL STEEL

1. THE EXISTING STRUCTURAL STEEL SHALL BE REPAINTED TO THE LIMITS SHOWN ON THE PLANS IN ACCORDANCE WITH THE R.I. STANDARD SPECIFICATIONS, SPECIAL PROVISION ITEM CODES 825.9920 AND 825.9921 AND THESE CONTRACT DRAWINGS. THE COLOR OF THE TOP COAT FOR BRIDGES Nos. 243 & 772 SHALL BE GREEN (SEMI-GLOSS) TO MATCH FEDERAL STANDARD 595 COLOR 24272.

2. THE EXISTING STRUCTURAL STEEL TO BE REPAINTED SHALL INCLUDE, BUT NOT BE LIMITED TO, BEAMS, DIAPHRAGMS, CONNECTION PLATES, STIFFENERS, BEARING PLATES, AND FASTENERS.

3. THE WORK ASSOCIATED WITH SETTING UP, MAINTAINING AND REMOVING THE CONTAINMENT SYSTEM FOR THE SURFACE PREPARATION AND THE REPAINTING OF THE EXISTING STRUCTURAL STEEL, MUST BE CONDUCTED IN ACCORDANCE WITH THE PROPOSED MAINTENANCE AND PROTECTION OF TRAFFIC PLANS AND THE TIME RESTRICTIONS SPECIFIED IN THE CONTRACT DOCUMENTS.

4. ALL EXISTING STRUCTURAL STEEL DESIGNATED TO BE REPAINTED SHALL BE CLEANED TO SSPC-SP10 "NEAR-WHITE BLAST CLEANING".

5. ANY COMPONENT NOT DESIGNATED TO BE REPAINTED SHALL BE ADEQUATELY PROTECTED FROM CLEANING OPERATIONS.

6. ANY DAMAGE RESULTING FROM CONTRACTOR'S CLEANING OR REPAINTING OPERATIONS, SHALL BE REPAIRED BY THE CONTRACTOR TO THE SATISFACTION OF THE ENGINEER AT NO ADDITIONAL COST TO THE STATE.

7. THE REPAINTING OF THE STEEL SUPERSTRUCTURE SHALL NOT COMMENCE UNTIL AFTER COMPLETION OF DECK SLAB OVER AND BACKWALL RECONSTRUCTION AND REMOVAL OF TEMPORARY DECK UNDERSIDE PROTECTIVE SHIELDING.

PAINTING OF NEW STRUCTURAL STEEL

1. THE NEW STRUCTURAL STEEL FOR REPAIRS TO BEAMS FOR BRIDGE Nos. 243 AND 772 SHALL BE PAINTED TO THE LIMITS INDICATED ON THE PLANS. NEW STRUCTURAL STEEL SHALL BE PREPARED AND PRIMED IN THE SHOP AND THE TOP COATS OF PAINT APPLIED IN THE FIELD AFTER INSTALLATION, ALL IN ACCORDANCE WITH SECTION 825 OF THE R.I. STANDARD SPECIFICATIONS. THE COLOR OF THE TOP COAT SHALL BE GREEN (SEMI-GLOSS) TO MATCH FEDERAL STANDARD 595 COLOR 24272.

2. TEMPORARY STEEL SUPPORT STRUCTURES NEED NOT BE PAINTED.

3. THE COSTS FOR PAINTING NEW STRUCTURAL STEEL SHALL BE INCLUDED FOR PAYMENT UNDER ITEM CODES 824.9920 AND 824.9921

GENERAL NOTES REGARDING TEMPORARY CONSTRUCTION CONDITIONS:

1. DESIGN WIND PRESSURES FOR CONSTRUCTION:

   MINIMUM WIND PRESSURES TO BE USED BY THE CONTRACTOR FOR DESIGN DURING THE CONSTRUCTION CONTRACT (WITH THE EXCEPTION OF SIGNS) SHALL BE FROM THE FOLLOWING TABLE:

HEIGHT ABOVE GROUND	WIND PRESSURE (PSF)
UP TO 17'	33
OVER 17' AND UP TO 33'	37
OVER 33' AND UP TO 50'	41
OVER 50' AND UP TO 75'	44
OVER 75' AND UP TO 100'	47

TABLE NOTES:

A. APPLICATION OF THE TABULAR PRESSURE:

   - BRIDGE COMPONENTS DURING CONSTRUCTION, PRIOR TO THE INSTALLATION OF THE PERMANENT BRACING SYSTEMS, NOT INCLUDING CRANE LIFTING.
   - FALSE WORK, SHORING, AND SCAFFOLDING AS DEFINED IN FHWA "GUIDE DESIGN SPECIFICATION FOR BRIDGE TEMPORARY WORKS", EXCLUDING 3-DIMENSIONAL LATTICED OR TRUSSED FRAMES OR TOWERS;
   - TEMPORARY SHIELDING.

   WIND PRESSURES FOR ALL OTHER STRUCTURES SHALL BE CALCULATED BASED ON ASCE “DESIGN LOADS ON STRUCTURES DURING CONSTRUCTION", SEI/ASCE 37-02 (ALL REFERENCES TO THE ASCE 7 IN THE SEI/ASCE 37-02 PUBLICATION, SHALL BE THE LATEST REVISION OF ASCE 7). THE EXPOSURE CATEGORY SHALL BE "C" .

B. WHERE APPLICABLE HIGHER AMTRAK WIND REQUIREMENTS SHALL SUPERSEDE THESE REQUIREMENTS.

C. FOR STRUCTURES SITUATED ABOVE LIVE INTERSTATE TRAFFIC, THE TABULAR VALUES SHALL BE INCREASED BY 5 PSF.

2. ERECTION OF BRIDGE COMPONENTS:

   FOR THE ERECTION OF STRUCTURES, THE FOLLOWING SHALL APPLY:

   - THE CONTRACTOR SHALL SUBMIT AN ERECTION PLAN THAT PROVIDES COMPLETE DETAILS OF THE PROCESS INCLUDING, BUT NOT LIMITED TO, TEMPORARY SUPPORTS, SCHEDULING AND OPERATION SEQUENCING, CRANE PLACEMENT, AND ASSUMED LOADS AND CALCULATED STRESSES DURING VARYING STAGES OF LIFTING. THIS APPLIES TO STRUCTURES OF ANY KIND. THE CAPACITY OF THE CRANE AND ALL LIFTING AND CONNECTING DEVICES SHALL BE ADEQUATE FOR 125 PERCENT (150 PERCENT OVER AMTRAK) OF THE TOTAL PICK LOAD INCLUDING SPREADERS AND OTHER MATERIALS. THIS FACTOR OF SAFETY SHALL BE IN ADDITION TO ALL MANUFACTURERS' PUBLISHED FACTORS OF SAFETY.

   - A REGISTERED PROFESSIONAL ENGINEER, LICENSED IN THE STATE OF RHODE ISLAND, WILL BE REQUIRED TO STAMP THE CONTRACTOR'S ERECTION PLAN.

   - THE CONTRACTOR'S PROFESSIONAL ENGINEER WILL BE REQUIRED TO INSPECT AND PROVIDE WRITTEN APPROVAL OF EACH PHASE OF A GIRDER INSTALLATION, PRIOR TO ALLOWING VEHICLES OR PEDESTRIANS ON OR BELOW THE STRUCTURE. THE PROFESSIONAL ENGINEER MUST ALSO STAMP ALL CHANGES TO THE CONTRACTOR'S ERECTION PLAN. ADDITIONALLY, ALL PROPOSED CHANGES MUST BE SUBMITTED TO RIDOT FOR REVIEW AND APPROVAL PRIOR TO IMPLEMENTATION.

   - A MANDATORY PRE-ERECTION CONFERENCE WILL BE HELD AT LEAST TWO WEEKS PRIOR TO THE START OF THE GIRDER INSTALLATION TO DISCUSS THE PLAN AND PROCEDURES, WORK SCHEDULES, CONTINGENCY PLANS, SAFETY REQUIREMENTS AND TRAFFIC CONTROL. THE CONTRACTOR'S PROFESSIONAL ENGINEER AND ERECTION SUBCONTRACTOR WILL BE REQUIRED TO ATTEND THIS MEETING, AS WILL THE RIDOT RESIDENT ENGINEER, THE DESIGN PROJECT ENGINEER, THE DESIGN CONSULTANT, AND AMTRAK. BASED UPON DISCUSSIONS AT THIS MEETING AND A REVIEW OF THE CONTRACTOR'S ERECTION PLAN, RIDOT MAY ORDER THE CONTRACTOR TO MODIFY AND RESUBMIT THE ERECTION PLAN TO THE ENGINEER FOR REVIEW AND APPROVAL.

   - THE CONTRACTOR WILL BE REQUIRED TO PERFORM DAILY INSPECTIONS OF THE ERECTED GIRDERS UNTIL THE BRIDGE DECK IS COMPLETELY POURED.

   - THE COST OF PREPARING AND STAMPING THE ERECTION PLAN, COMPUTATIONS, AND REPORTS, RESPONDING TO RIDOT'S COMMENTS AND MAKING THE NECESSARY REVISIONS, AND ATTENDANCE AT MEETINGS SHALL BE CONSIDERED INCIDENTAL TO THE COST OF THE SUPERSTRUCTURE PAY ITEM, BE IT CONCRETE, STEEL OR TIMBER.

3. TEMPORARY BARRIER ON BRIDGES:

   - TEMPORARY BARRIER TO BE UTILIZED ON BRIDGES AND THEIR APPROACH DURING CONSTRUCTION SHALL MEET TEST LEVEL TL-4.

REVISIONS		
NO.	DATE	BY

COMMONWEALTH
ENGINEERS & CONSULTANTS, INC.
400 SMITH STREET
PROVIDENCE, RI 02908

RHODE ISLAND
DEPARTMENT OF TRANSPORTATION

STATEWIDE BRIDGE REPAIRS
CONTRACT 4 - AMTRAK BRIDGES

RHODE ISLAND

BRIDGE GENERAL NOTES
SHEET 2

CHECKED BY _____ DATE _____ SCALE AS SHOWN

SITE RESTORATION:

ALL PUBLIC OR PRIVATE PROPERTY (WITHIN OR ADJACENT TO THE PROJECT LIMITS DISTURBED BY THE CONTRACTOR'S OPERATIONS), SHALL BE RESTORED TO ITS PRE-CONSTRUCTION CONDITION BY THE CONTRACTOR TO THE SATISFACTION OF THE ENGINEER. ALL RESTORATION SHALL BE IN ACCORDANCE WITH THE APPLICABLE PROVISIONS OF THE RHODE ISLAND STANDARD SPECIFICATIONS FOR ROAD AND BRIDGE CONSTRUCTION, 2004 EDITION. THE COST OF RESTORATIONS SHALL BE INCLUDED IN THE PRICES BID FOR OTHER SCHEDULED ITEMS OF WORK, AND NO SEPARATE PAYMENT SHALL BE MADE.

TEMPORARY DECK UNDERSIDE SHIELDING NOTES - BRIDGE Nos. 243, 772, 834, & 841 :

1. PROTECTIVE SHIELDING IS MANDATORY AND SHALL BE COMPLETELY INSTALLED UNDER THE BRIDGE STRUCTURE AS DETAILED IN THE INDIVIDUAL BRIDGE PLANS, PRIOR TO COMMENCING ANY DEMOLITION WORK.

2. PROTECTIVE SHIELDING SHALL BE INSTALLED AT LOCATIONS SHOWN IN THESE PLANS AND AS INDICATED IN THE STANDARD SPECIFICATIONS.

3. THE PROTECTIVE SHIELDING SHALL BE DESIGNED FOR THE GREATER OF 150 POUNDS PER SQUARE FOOT OR THE ACTUAL IMPOSED LOADINGS DUE TO THE CONSTRUCTION OPERATION. THE CONTRACTOR SHALL SUBMIT SHOP DRAWINGS STAMPED BY A REGISTERED PROFESSIONAL ENGINEER DETAILING THE TEMPORARY PROTECTIVE SHIELDING FOR REVIEW AND APPROVAL. REFER TO STANDARD SPECIFICATION CODE 803.0500 FOR ADDITIONAL REQUIREMENTS.

4. THE COST OF PROTECTIVE SHIELDING SHALL BE PAID FOR UNDER ITEM CODE 803.0500 AND SHALL INCLUDE ALL LABOR, MATERIALS, EQUIPMENT, FABRICATION, ERECTION, REMOVAL, RESTORATION AND INCIDENTALS REQUIRED TO COMPLETE THE WORK.

UTILITIES:

1. LOCATION OF EXISTING UTILITIES SHOWN ARE APPROXIMATE. THE CONTRACTOR SHALL VERIFY LOCATIONS OF ALL UTILITIES, SHOULD THEY AFFECT ANY CONSTRUCTION OPERATIONS. THE "DIG SAFE" POLICY SHALL ALSO BE FOLLOWED. ANY DAMAGE TO EXISTING UTILITIES SHOWN ON THE PLANS OR LOCATED BY DIG SAFE SHALL BE THE CONTRACTOR'S RESPONSIBILITY. COST OF DAMAGE TO THESE UTILITIES SHALL BE BORNE BY THE CONTRACTOR.

2. THE CONTRACTOR SHALL BE AWARE OF THE PRESENCE OF EXISTING HIGHWAY LIGHTING WIRING WITHIN A CONDUIT ATTACHED TO THE BRIDGE MEDIAN BARRIER OF BRIDGE No. 772. THIS UTILITY SHALL REMAIN IN SERVICE AND SHALL NOT BE DAMAGED AS A RESULT OF ANY CONSTRUCTION ACTIVITIES. ANY DAMAGE TO THIS UTILITY SHALL BE REPAIRED BY THE CONTRACTOR AT NO ADDITIONAL COST TO THE STATE.

3. THE CONTRACTOR SHALL BE AWARE OF THE PRESENCE OF EXISTING HIGHWAY LIGHTING WIRING WITHIN A CONDUIT CAST IN THE NORTH BRIDGE PARAPET OF BRIDGE NO. 841. THIS UTILITY SHALL REMAIN IN SERVICE AND SHALL NOT BE DAMAGED AS A RESULT OF ANY CONSTRUCTION ACTIVITIES. ANY DAMAGE TO THIS UTILITY SHALL BE REPAIRED BY THE CONTRACTOR AT NO ADDITIONAL COST TO THE STATE.

SEDIMENTATION CONTROLS FOR CATCH BASINS NOTES:

1. SEDIMENTATION CONTROL DEVICES FOR CATCH BASINS SHALL BE INSTALLED AS DIRECTED BY THE ENGINEER.

SPECIAL NOTES TO CONTRACTOR REGARDING AMTRAK:

1. THE CONTRACTOR SHALL BE ESPECIALLY AWARE THAT INFRASTRUCTURE FOR ELECTRIFICATION OF THE RAILROAD IS IN PLACE AND IS ENERGIZED.

2. THE CONTRACTOR SHALL BE RESPONSIBLE FOR CONDUCTING ALL NECESSARY COORDINATION WITH AMTRAK PRIOR TO AND DURING ALL CONSTRUCTION ACTIVITIES.

3. AMTRAK SPECIFICATIONS REGARDING BONDING, GROUNDING, SHIELDING, AND FOR WORKING OVER, AROUND, AND WITHIN AMTRAK ROW ARE CONTAINED IN THE APPENDICES OF THE CS-PAGES OF THE CONTRACT DOCUMENTS. THE CONTRACTOR SHALL CONDUCT A THOROUGH REVIEW OF THESE SPECIFICATIONS PRIOR TO COMMENCEMENT OF ANY CONSTRUCTION ACTIVITIES AND SHALL SATISFY ALL AMTRAK REQUIREMENTS AS DIRECTED BY AMTRAK AND/OR THE ENGINEER. THESE AMTRAK SPECIFICATIONS INCLUDE THE FOLLOWING:

   A. AMTRAK'S EP3014 ENGINEERING PRACTICE "MAINTENANCE AND PROTECTION OF RAILROAD TRAFFIC DURING CONTRACTOR OPERATIONS"
   B. AMTRAK'S EP3016 ENGINEERING PRACTICE "STORM WATER DRAINAGE AND DISCHARGE FROM ADJACENT PROPERTY ONTO AMTRAK RIGHT-OF-WAY"
   C. AMTRAK'S PROTECTIVE BARRIERS AND DEBRIS SHIELDS STANDARD DRAWINGS ET-1446-D AND ET-1447-D.

4. ANY WORK TO BE PERFORMED WITHIN 15 FEET OF THE OVERHEAD WIRES MUST BE DONE UNDER THE PROTECTION OF AN AMTRAK CLASS "A"EMPLOYEE.

5. WHENEVER WORK IS PERFORMED IN THE VICINITY OF ELECTRIFIED TRACKS AND/OR HIGH VOLTAGE WIRES, PARTICULAR CARE MUST BE EXERCISED, AND RAILROAD'S REQUIREMENTS REGARDING CLEARANCE TO BE MAINTAINED BETWEEN EQUIPMENT AND TRACKS AND/OR ENERGIZED WIRES. THE CONTRACTOR MUST SUPPLY AN ADEQUATE LENGTH OF GROUNDING CABLE (4/0 COPPER WITH APPROVED CLAMPS) FOR EACH PIECE OF EQUIPMENT WORKING NEAR OR ADJACENT TO ANY OVERHEAD WIRE (SEE AMTRAK SPECIFICATION 16064).

6. ALL UNDERGROUND UTILITIES, CABLE, AND FACILITIES MUST BE LOCATED AND PROTECTED BEFORE ANY EXCAVATING, DRILLING, BORING/DIRECTIONAL DRILLING, GROUND PENETRATING ACTIVITIES, OR CONSTRUCTION TAKES PLACE. THIS INCLUDES RAILROAD AND COMMERCIAL UTILITIES, CABLES, DUCT LINES, AND FACILITIES. THESE ACTIVITIES WILL NOT BE PERFORMED IN CLOSE PROXIMITY TO THE AMTRAK DUCT LINES UNLESS MONITORED BY ON-SITE AMTRAK COMMUNICATIONS AND SIGNAL (C&S) DEPARTMENT PERSONNEL. HAND DIGGING MAY BE REQUIRED, AS DIRECTED BY AMTRAK THROUGH THE ON-SITE AMTRAK C&S SUPPORT PERSONNEL. AMTRAK MAINTAINS THE RIGHT TO ACCESS ALL EXISTING CABLES AND CONDUITS THROUGHOUT CONSTRUCTION. AMTRAK ALSO RESERVES THE RIGHT TO UPGRADE AND INSTALL NEW CABLES AND CONDUITS IN THE AFFECTED AREA. THE "ONE-CALL" PROCESS MUST BE FOLLOWED. BE AWARE THAT AMTRAK IS NOT A PART OF THE ONE-CALL PROCESS; CONTACT AMTRAK ENGINEERING TO HAVE ALL AMTRAK UNDERGROUND UTILITIES AND ASSETS LOCATED. PRECAUTIONS MUST BE TAKEN TO PREVENT ANY INTERRUPTION TO AMTRAK'S OPERATION.

7. A MINIMUM SIGNAL PREVIEW DISTANCE SHALL NOT BE LESS THAN 1500 FEET. SIGNAL PREVIEW IS MEASURED FROM A POINT 13 FEET ABOVE THE TOP OF RAIL, AT A MINIMUM OF 1500 FEET FROM THE TOP SIGNAL HEAD ("A" HEAD) OF THE SIGNAL THE TRAIN IS APPROACHING. CONSULTANTS PERFORMING WORK FOR AMTRAK ON AMTRAK PROPERTY SHALL PROVIDE A DRAWING SHOWING THAT THERE IS ADEQUATE SIGNAL PREVIEW. THIS DRAWING MUST BE IN THE FINAL DESIGN. ALL TEMPORARY STRUCTURES, FORMWORK, EQUIPMENT, ETC. MUST NOT OBSTRUCT SIGNAL PREVIEW DURING CONSTRUCTION. AN AMTRAK C&S PERSON AT THAT LOCATION SHOULD VERIFY THAT THERE IS NO SIGNAL EQUIPMENT IN THE WAY OF THE PROJECT AND THAT SIGNAL PREVIEW IS NOT BEING OBSTRUCTED.

8. IF WORK INVOLVES HEAVY TRUCKS, EQUIPMENT, OR MACHINERY ALONG THE RIGHT-OF-WAY, DUCT LINES AND PULL BOXES SHALL BE INSPECTED TO INSURE THEY CAN WITHHOLD THE APPROPRIATE WEIGHT. REFER TO TIER TABLE DOCUMENT LOCATED IN THE APPENDICES OF THE CS PAGES OF THE CONTRACT DOCUMENTS.

9. RAILS MUST BE PROTECTED AGAINST DEBRIS. RUST, SAND, METAL SHAVINGS OR OTHER MATERIAL THAT CAN INTERFERE WITH THE PROPER SHUNTING SENSITIVITY OF THE TRACK CIRCUIT.

10. AMTRAK SHALL BE NOTIFIED SEVEN CALENDAR DAYS PRIOR TO THE JACKING OF BRIDGES.

REVISIONS		
NO.	DATE	BY

COMMONWEALTH
ENGINEERS & CONSULTANTS, INC.
400 SMITH STREET
PROVIDENCE, RI 02908

RHODE ISLAND
DEPARTMENT OF TRANSPORTATION

STATEWIDE BRIDGE REPAIRS
CONTRACT 4 - AMTRAK BRIDGES

RHODE ISLAND

BRIDGE GENERAL NOTES SHEET 3

CHECKED BY _____ DATE _____ SCALE AS SHOWN

FED. ROAD DIV. NO.	STATE	FEDERAL AID PROJECT NO.	FISCAL YEAR	SHEET NO.	TOTAL SHEETS
–	RI	–	2019	9	82

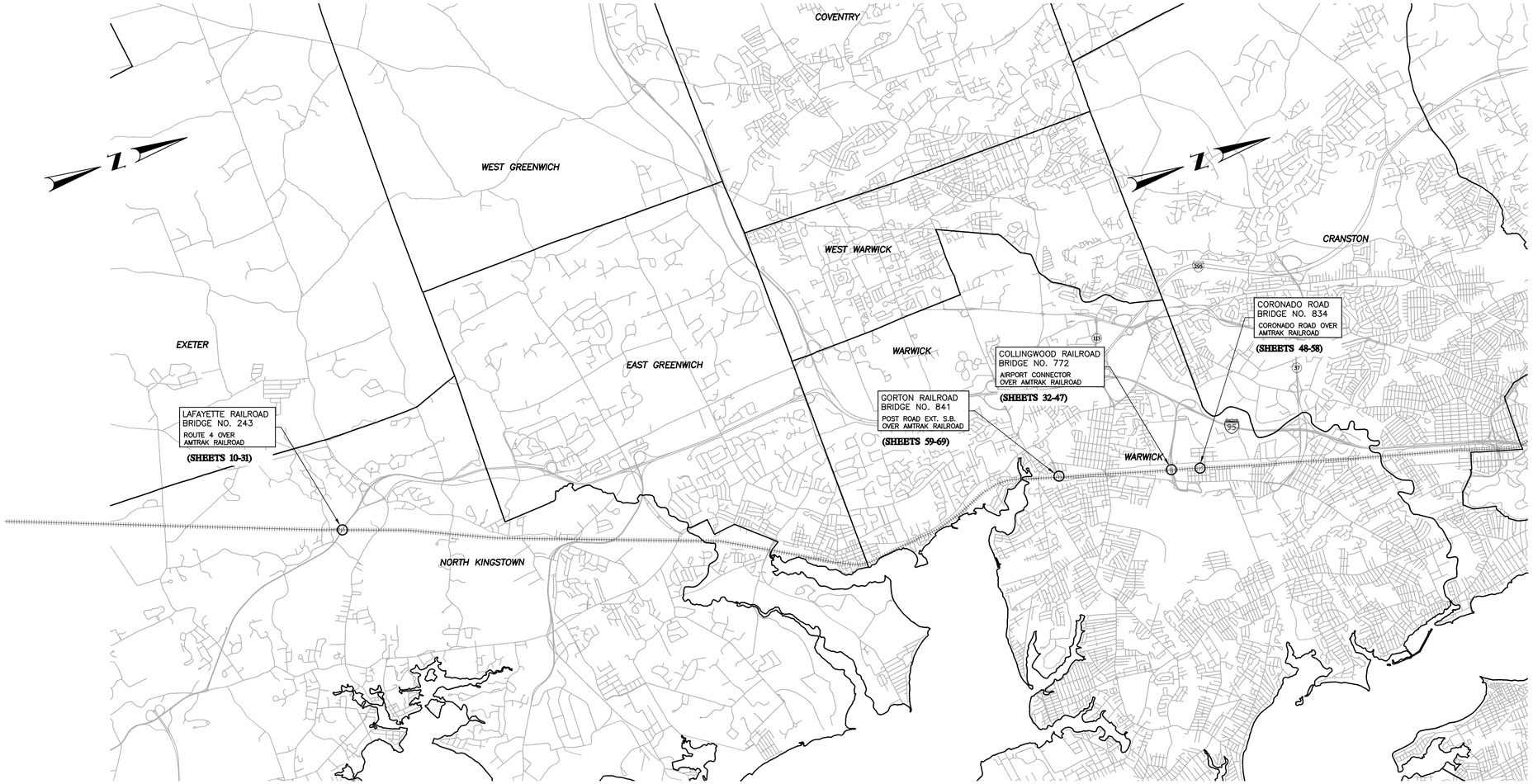

KEY PLAN

NOT TO SCALE

REVISIONS		
NO.	DATE	BY

RHODE ISLAND
DEPARTMENT OF TRANSPORTATION

STATEWIDE BRIDGE REPAIRS
CONTRACT 4 - AMTRAK BRIDGES

RHODE ISLAND

KEY PLAN

COMMONWEALTH
ENGINEERS & CONSULTANTS, INC.
400 SMITH STREET
PROVIDENCE, RI 02908

CHECKED BY _____ DATE _____ SCALE AS SHOWN

0113R_V1_009_KEYPLAN

FED. ROAD DIV. NO.	STATE	FEDERAL AID PROJECT NO.	FISCAL YEAR	SHEET NO.	TOTAL SHEETS
–	RI	–	2019	10	82

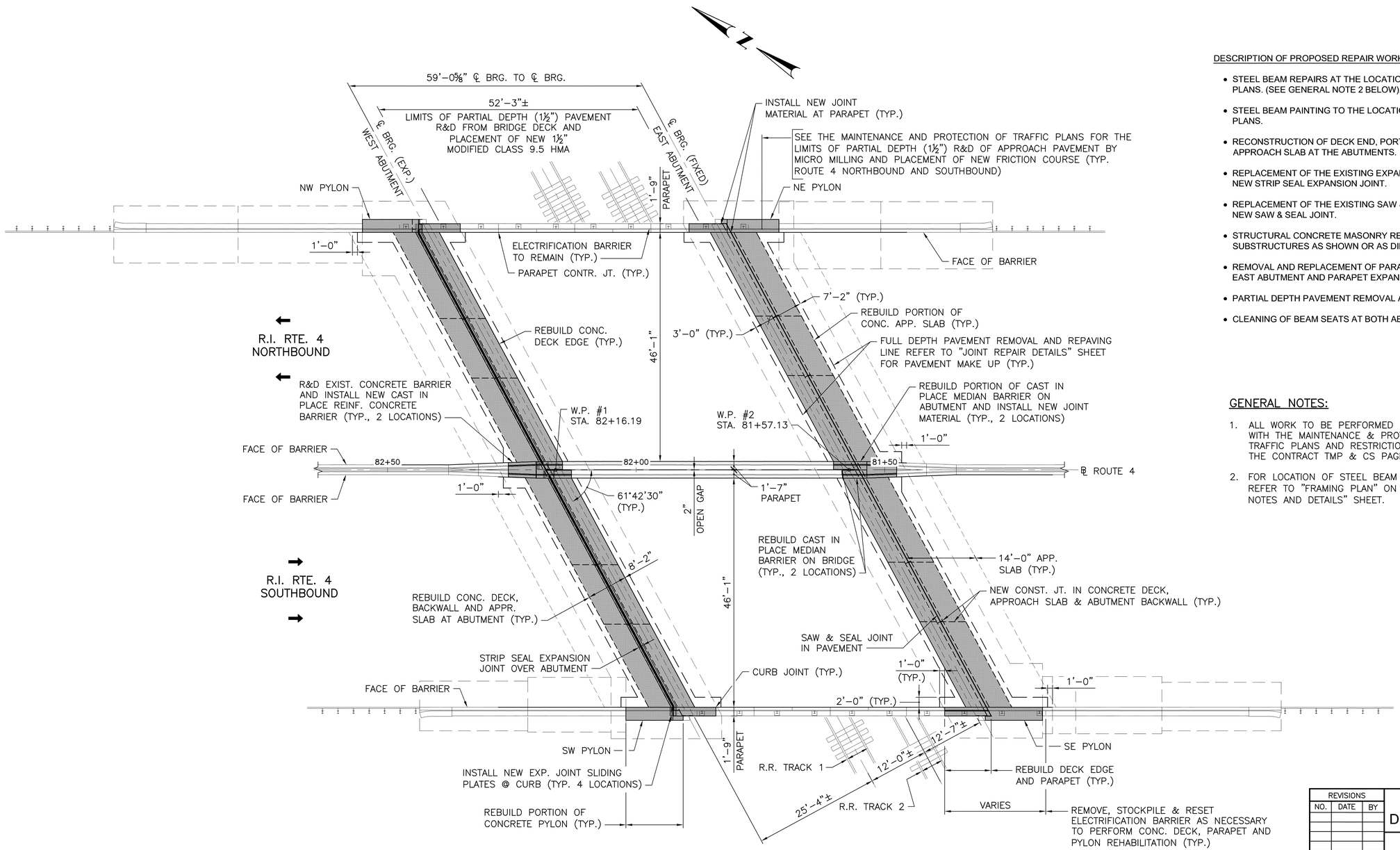

BRIDGE GENERAL PLAN

SCALE:1"=10'–0"

DESCRIPTION OF PROPOSED REPAIR WORK FOR LAFAYETTE RAILROAD BRIDGE NO. 243:

- STEEL BEAM REPAIRS AT THE LOCATIONS AND TO THE DETAILS SHOWN ON THESE PLANS. (SEE GENERAL NOTE 2 BELOW).
- STEEL BEAM PAINTING TO THE LOCATIONS AND THE DETAILS SHOWN ON THESE PLANS.
- RECONSTRUCTION OF DECK END, PORTIONS OF PARAPET, BACKWALL, AND APPROACH SLAB AT THE ABUTMENTS.
- REPLACEMENT OF THE EXISTING EXPANSION JOINT AT THE WEST ABUTMENT WITH NEW STRIP SEAL EXPANSION JOINT.
- REPLACEMENT OF THE EXISTING SAW & SEAL JOINTS AT EAST ABUTMENT WITH NEW SAW & SEAL JOINT.
- STRUCTURAL CONCRETE MASONRY REPAIRS TO THE REINFORCED CONCRETE SUBSTRUCTURES AS SHOWN OR AS DIRECTED BY THE ENGINEER.
- REMOVAL AND REPLACEMENT OF PARAPET AND CURB FIXED JOINT MATERIAL AT EAST ABUTMENT AND PARAPET EXPANSION JOINT MATERIAL AT WEST ABUTMENT.
- PARTIAL DEPTH PAVEMENT REMOVAL AND REPAVING TO LIMITS SHOWN.
- CLEANING OF BEAM SEATS AT BOTH ABUTMENTS.

GENERAL NOTES:

1. ALL WORK TO BE PERFORMED IN ACCORDANCE WITH THE MAINTENANCE & PROTECTION OF TRAFFIC PLANS AND RESTRICTIONS NOTED IN THE CONTRACT TMP & CS PAGES.
2. FOR LOCATION OF STEEL BEAM REPAIR AREAS, REFER TO "FRAMING PLAN" ON "FRAMING PLAN, NOTES AND DETAILS" SHEET.

LEGEND

DENOTES AREAS OF NEW CONCRETE

REVISIONS		
NO.	DATE	BY

RHODE ISLAND
DEPARTMENT OF TRANSPORTATION

STATEWIDE BRIDGE REPAIRS
CONTRACT 4 - AMTRAK BRIDGES
LAFAYETTE R.R. BRIDGE No. 243
NORTH KINGSTOWN, RHODE ISLAND

BRIDGE GENERAL PLAN

COMMONWEALTH ENGINEERS & CONSULTANTS, INC.
400 SMITH STREET
PROVIDENCE, RI 02908

CHECKED BY _____ DATE _____ SCALE AS SHOWN

0113R_V1_010_BGENERAL001

FED. ROAD DIV. NO.	STATE	FEDERAL AID PROJECT NO.	FISCAL YEAR	SHEET NO.	TOTAL SHEETS
–	RI	–	2019	11	82

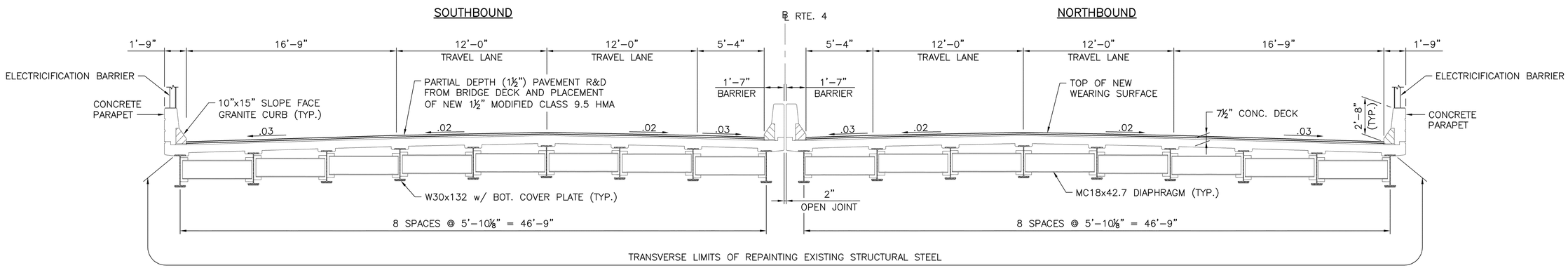

TRANSVERSE SECTION

SCALE: ¼"=1'–0"

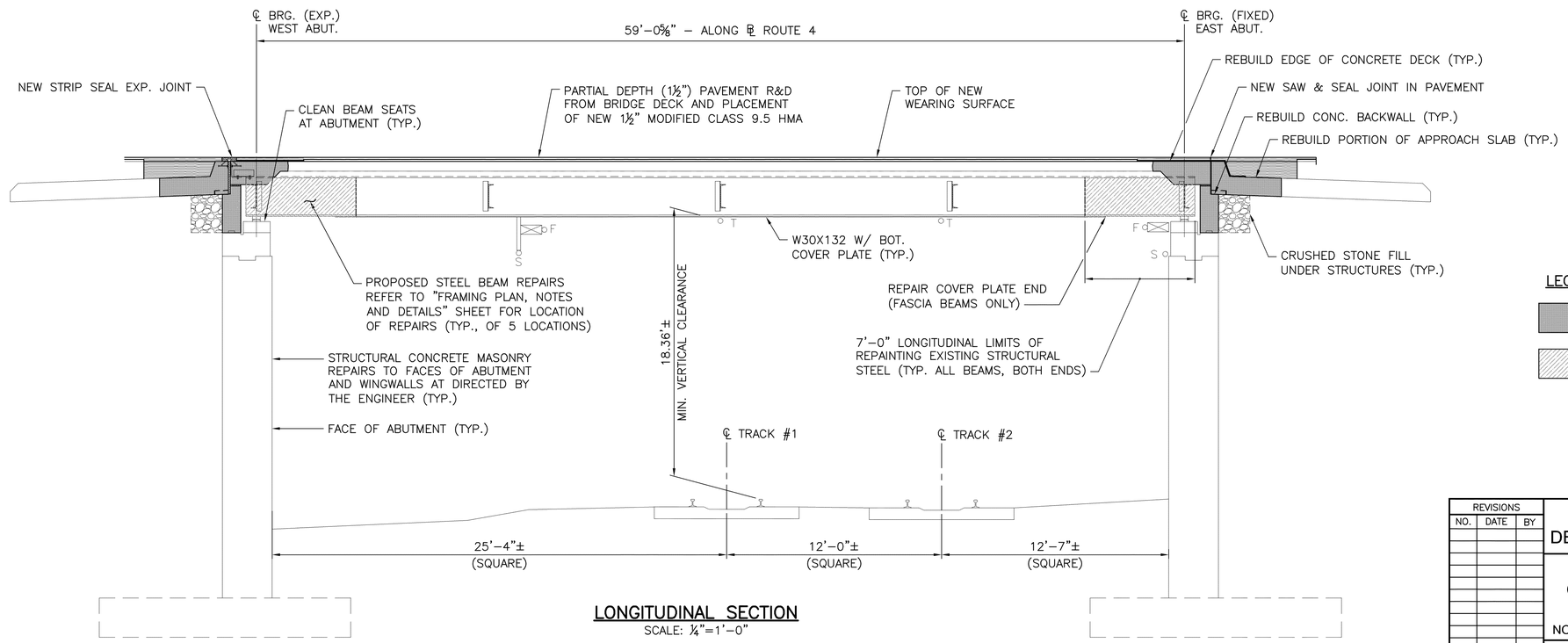

LONGITUDINAL SECTION

SCALE: ¼"=1'–0"

LEGEND

	DENOTES AREAS OF NEW CONCRETE
	DENOTES LIMITS OF REPAINTING EXISTING STRUCTURAL STEEL
S	AMTRAK STATIC WIRE
F	AMTRAK FEEDER WIRE
T	AMTRAK TROLLEY WIRE

REVISIONS		
NO.	DATE	BY

RHODE ISLAND
DEPARTMENT OF TRANSPORTATION

STATEWIDE BRIDGE REPAIRS
CONTRACT 4 - AMTRAK BRIDGES
LAFAYETTE R.R. BRIDGE No. 243
NORTH KINGSTOWN, RHODE ISLAND

TRANSVERSE AND LONGITUDINAL SECTIONS

COMMONWEALTH ENGINEERS & CONSULTANTS, INC.
400 SMITH STREET
PROVIDENCE, RI 02908

CHECKED BY _____ DATE _____ SCALE AS SHOWN

0113R_V1_011_BTYPICAL001

FED. ROAD DIV. NO.	STATE	FEDERAL AID PROJECT NO.	FISCAL YEAR	SHEET NO.	TOTAL SHEETS
–	RI	–	2019	12	82

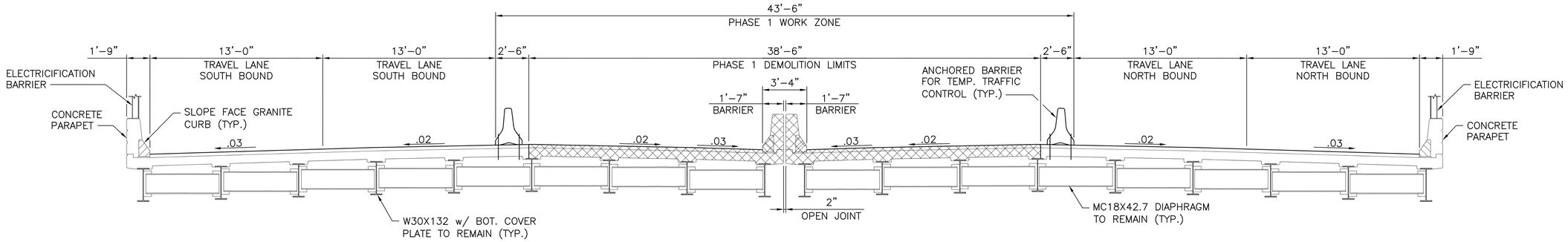

PHASE 1 TRANSVERSE SECTION (LOOKING NORTH)

SCALE: ¼"=1'–0"

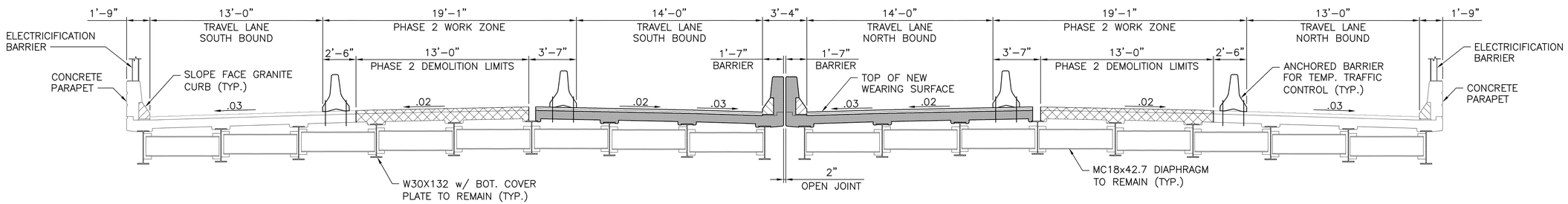

PHASE 2 TRANSVERSE SECTION (LOOKING NORTH)

SCALE: ¼"=1'–0"

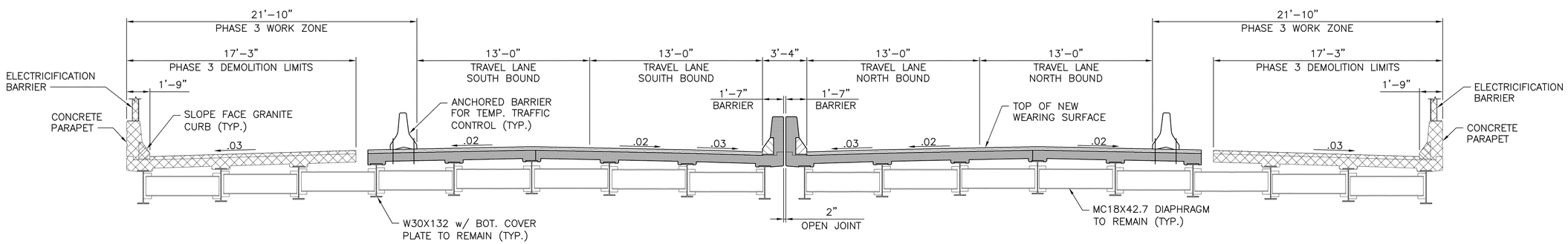

PHASE 3 TRANSVERSE SECTION (LOOKING NORTH)

SCALE: ¼"=1'–0"

LEGEND

DENOTES AREAS TO BE REMOVED AND DISPOSED

DENOTES AREAS OF NEW CONCRETE

COMMONWEALTH ENGINEERS & CONSULTANTS, INC.
400 SMITH STREET
PROVIDENCE, RI 02908

REVISIONS		
NO.	DATE	BY

RHODE ISLAND
DEPARTMENT OF TRANSPORTATION

STATEWIDE BRIDGE REPAIRS
CONTRACT 4 - AMTRAK BRIDGES
LAFAYETTE R.R. BRIDGE No. 243
NORTH KINGSTOWN, RHODE ISLAND

PHASE CONSTRUCTION

CHECKED BY _____ DATE _____ SCALE AS SHOWN

0113R_V1_012_BPHASDETL001

FED. ROAD DIV. NO.	STATE	FEDERAL AID PROJECT NO.	FISCAL YEAR	SHEET NO.	TOTAL SHEETS
–	RI	–	2019	13	82

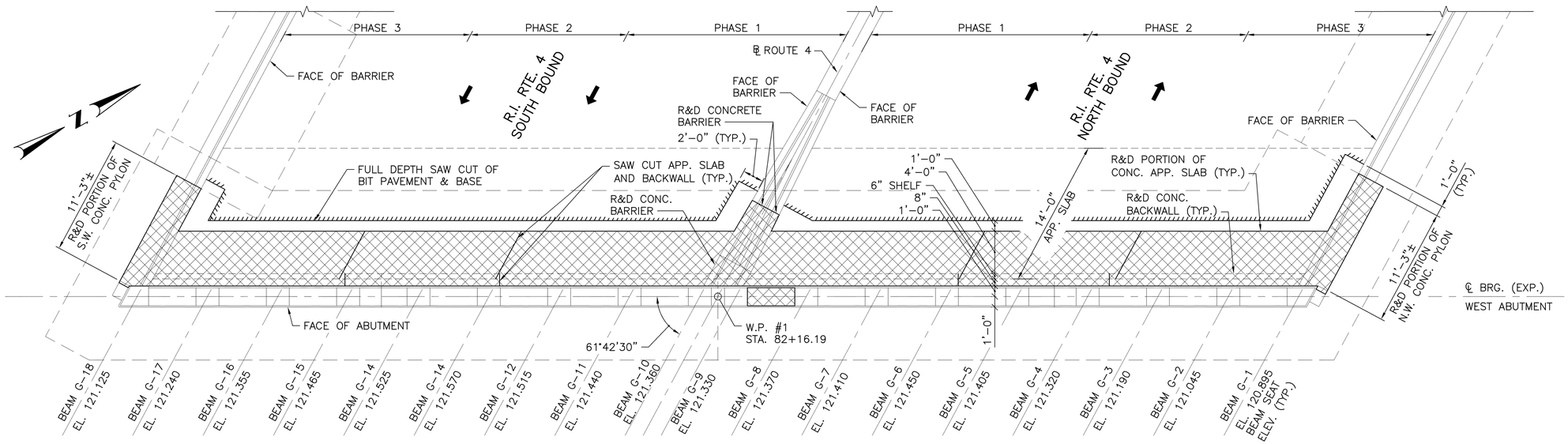

WEST ABUTMENT – PLAN

SCALE: 3/16"=1'-0"

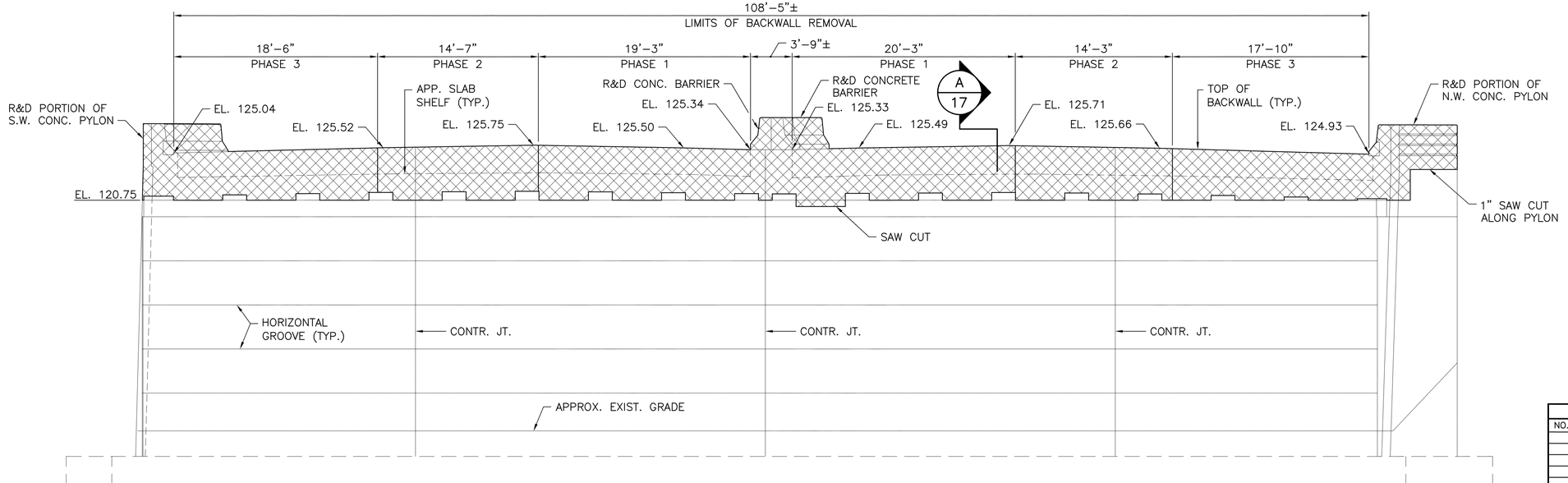

WEST ABUTMENT – ELEVATION

SCALE: 3/16"=1'-0"

LEGEND

DENOTES AREAS TO BE REMOVED AND DISPOSED

REVISIONS		
NO.	DATE	BY

RHODE ISLAND
DEPARTMENT OF TRANSPORTATION

STATEWIDE BRIDGE REPAIRS
CONTRACT 4 - AMTRAK BRIDGES
LAFAYETTE R.R. BRIDGE No. 243
NORTH KINGSTOWN, RHODE ISLAND

WEST ABUTMENT
DEMOLITION

COMMONWEALTH ENGINEERS & CONSULTANTS, INC.
400 SMITH STREET
PROVIDENCE, RI 02908

CHECKED BY _____ DATE _____ SCALE AS SHOWN

0113R_V1_013_DEM0001

FED. ROAD DIV. NO.	STATE	FEDERAL AID PROJECT NO.	FISCAL YEAR	SHEET NO.	TOTAL SHEETS
–	RI	–	2019	14	82

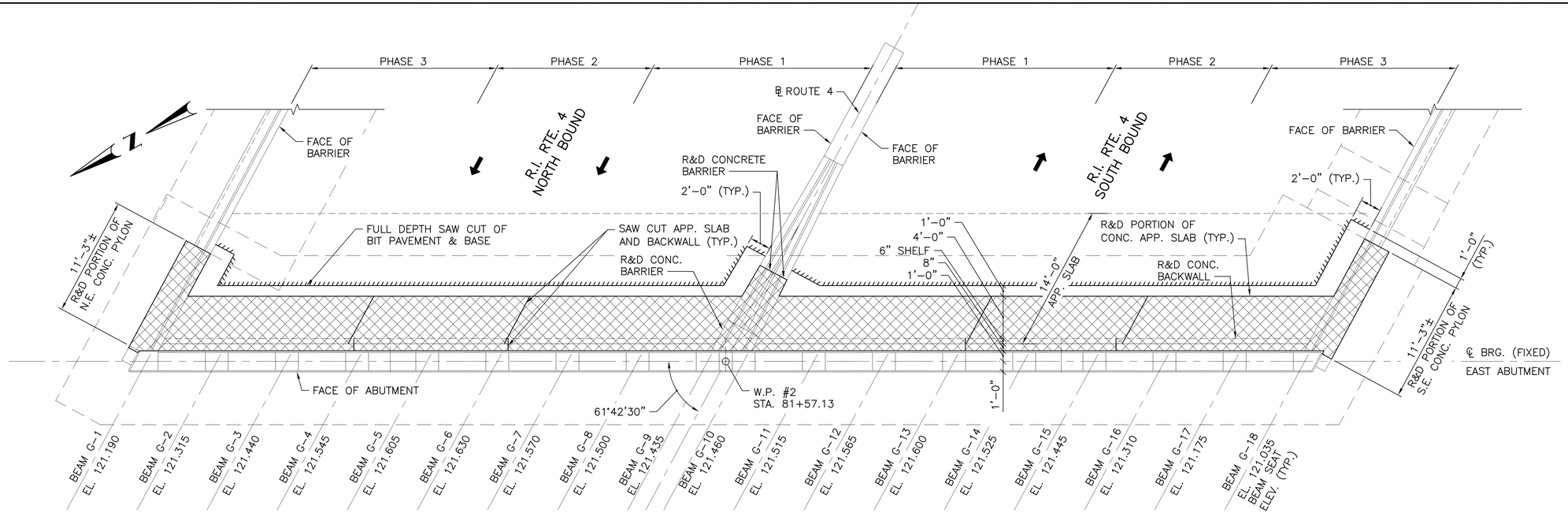

EAST ABUTMENT – PLAN

SCALE: 3/16"=1'–0"

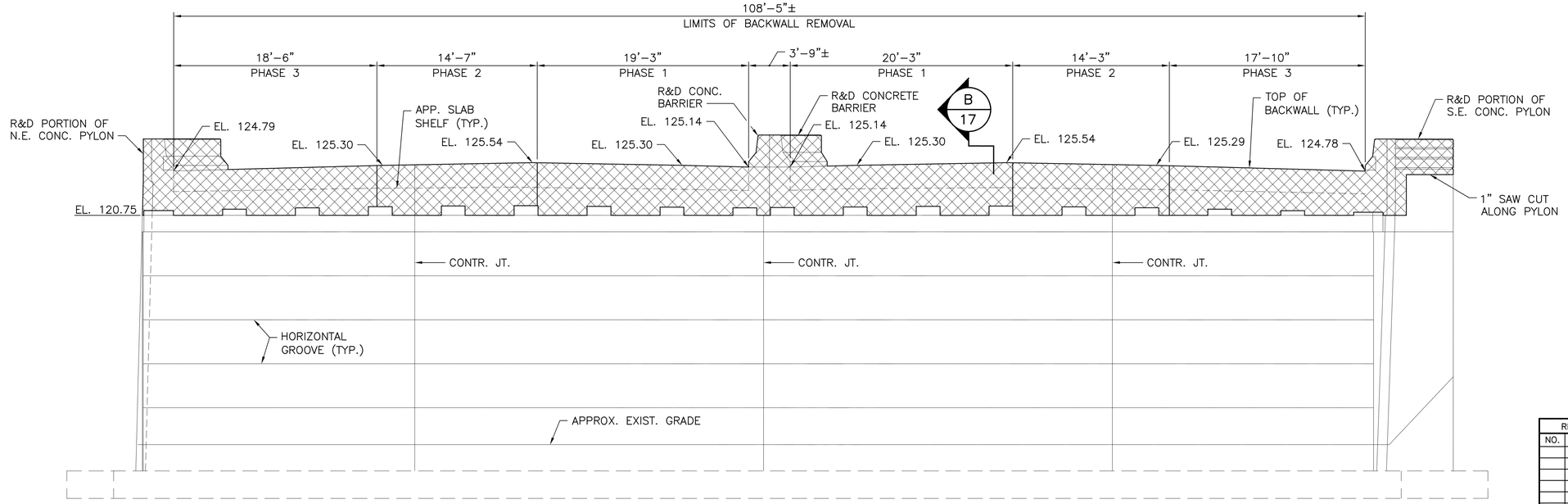

EAST ABUTMENT – ELEVATION

SCALE: 3/16"=1'–0"

LEGEND

DENOTES AREAS TO BE REMOVED AND DISPOSED

REVISIONS		
NO.	DATE	BY

RHODE ISLAND
DEPARTMENT OF TRANSPORTATION

STATEWIDE BRIDGE REPAIRS
CONTRACT 4 - AMTRAK BRIDGES
LAFAYETTE R.R. BRIDGE No. 243
NORTH KINGSTOWN, RHODE ISLAND

EAST ABUTMENT DEMOLITION

COMMONWEALTH ENGINEERS & CONSULTANTS, INC.
400 SMITH STREET
PROVIDENCE, RI 02908

CHECKED BY _____ DATE _____ SCALE AS SHOWN

0113R_V1_014_DEMO002

FED. ROAD DIV. NO.	STATE	FEDERAL AID PROJECT NO.	FISCAL YEAR	SHEET NO.	TOTAL SHEETS
–	RI	–	2019	15	82

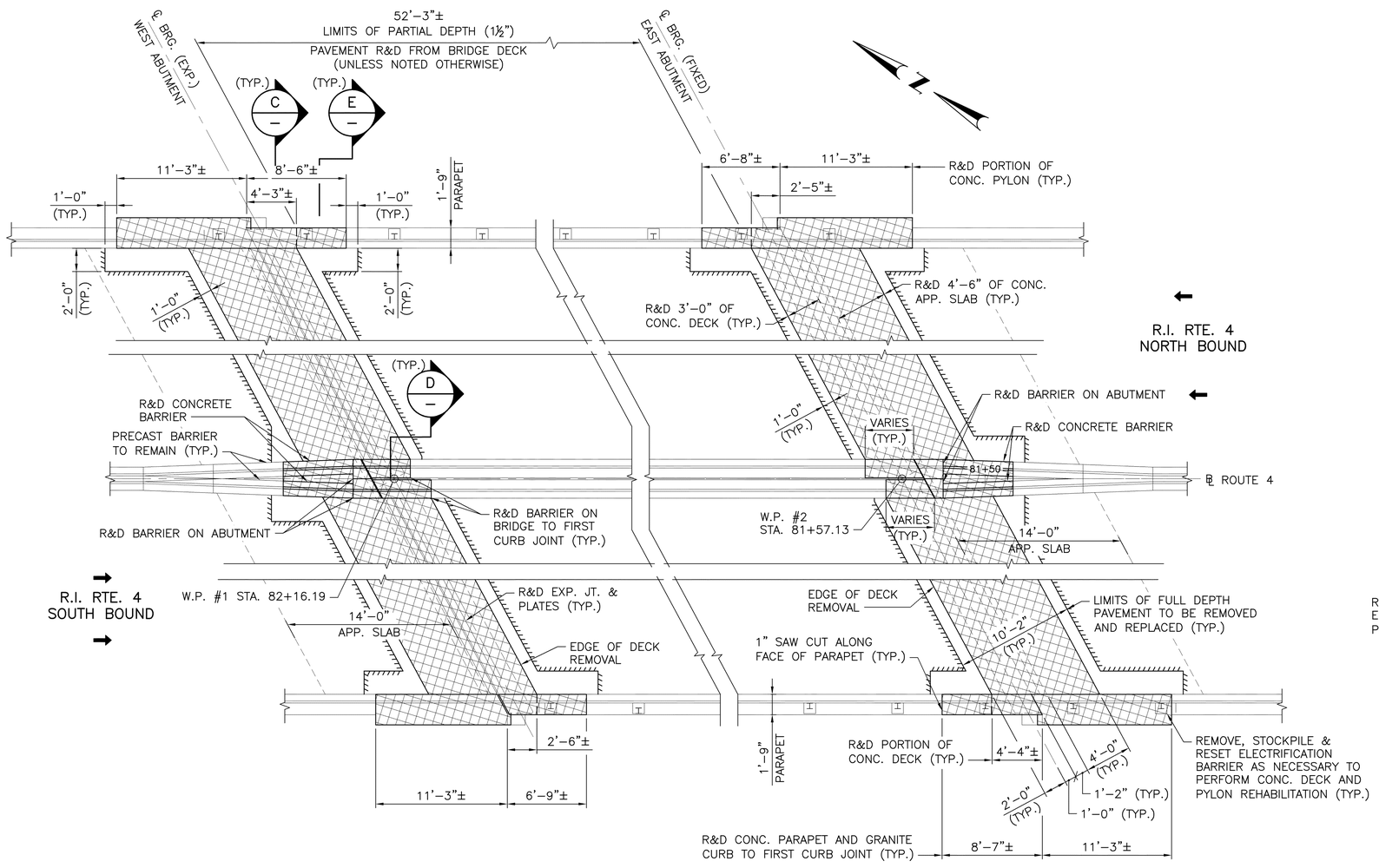

DEMOLITION PLAN

SCALE: 3/16"=1'–0"

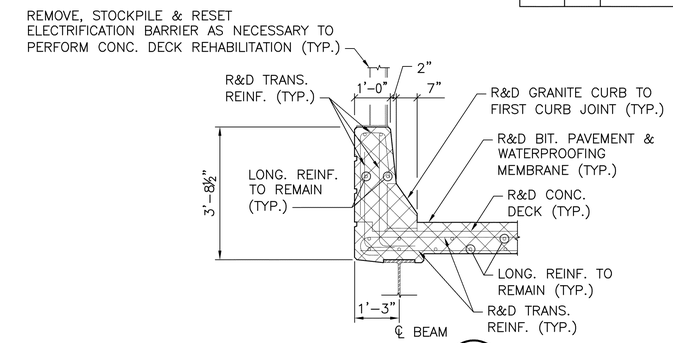

SECTION C –

SCALE: ½"=1'–0"

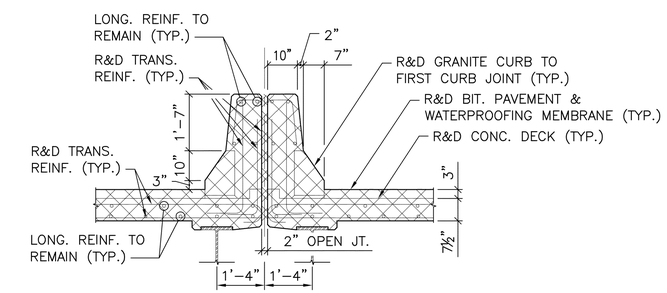

SECTION D –

SCALE: ½"=1'–0"

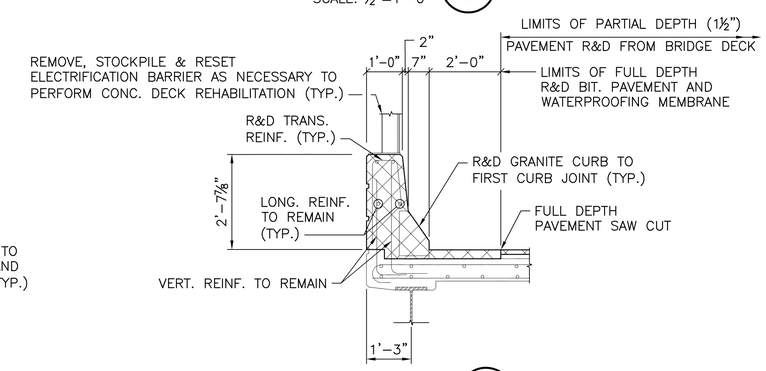

SECTION E –

SCALE: ½"=1'–0"

NOTES:

1. ALL COSTS ASSOCIATED WITH REMOVAL AND RESETTING PARAPET ELECTRIFICATION BARRIER, INCLUDING ANY NEW HARDWARE, SHALL BE INCLUDED WITHIN THE CONTRACT UNIT PRICE FOR THE ASSOCIATED CONCRETE FOR WHICH THE WORK IS REQUIRED. REFER TO JOB SPECIFIC CODE 830.99 FOR ADDITIONAL INFORMATION.
2. ANY ITEMS THAT ARE DESIGNATED TO BE REMOVED, STOCKPILED, AND REINSTALLED WHICH ARE DAMAGED BY THE CONTRACTOR SHALL BE REPLACED OR REPAIRED TO THE SATISFACTION OF THE ENGINEER AT NO ADDITIONAL COST TO THE STATE.

LEGEND

DENOTES AREAS EXIST. BRIDGE STRUCTURE TO BE REMOVED AND DISPOSED

DENOTES FULL DEPTH SAW CUT OF BITUMINOUS PAVEMENT

REVISIONS		
NO.	DATE	BY

RHODE ISLAND
DEPARTMENT OF TRANSPORTATION

STATEWIDE BRIDGE REPAIRS
CONTRACT 4 - AMTRAK BRIDGES
LAFAYETTE R.R. BRIDGE No. 243
NORTH KINGSTOWN, RHODE ISLAND

DEMOLITION PLAN AND SECTIONS

COMMONWEALTH ENGINEERS & CONSULTANTS, INC.
400 SMITH STREET
PROVIDENCE, RI 02908

CHECKED BY _____ DATE _____ SCALE AS SHOWN

0113R_V1_015_DEM0003

FED. ROAD DIV. NO.	STATE	FEDERAL AID PROJECT NO.	FISCAL YEAR	SHEET NO.	TOTAL SHEETS
–	RI	–	2019	16	82

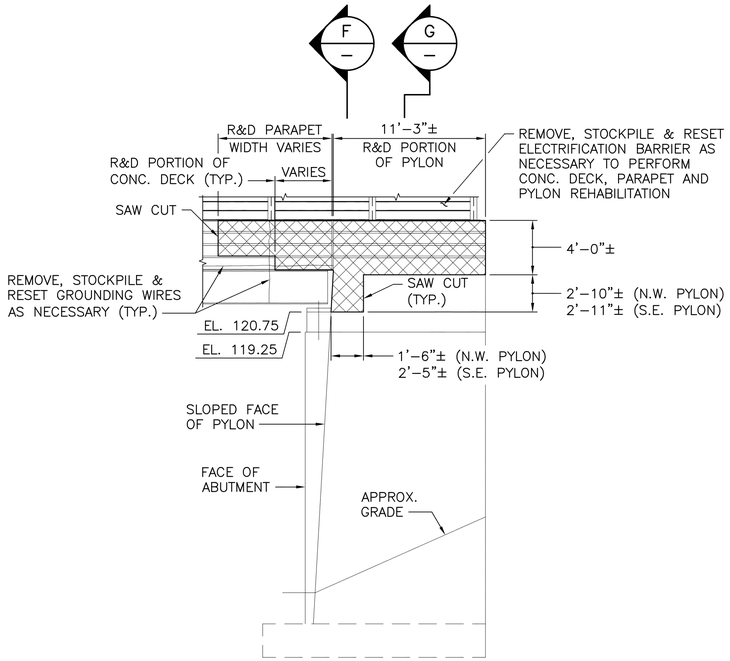

EXISTING

N.W. & S.E. PYLON – ELEVATION

SCALE: 3/16"=1'–0"

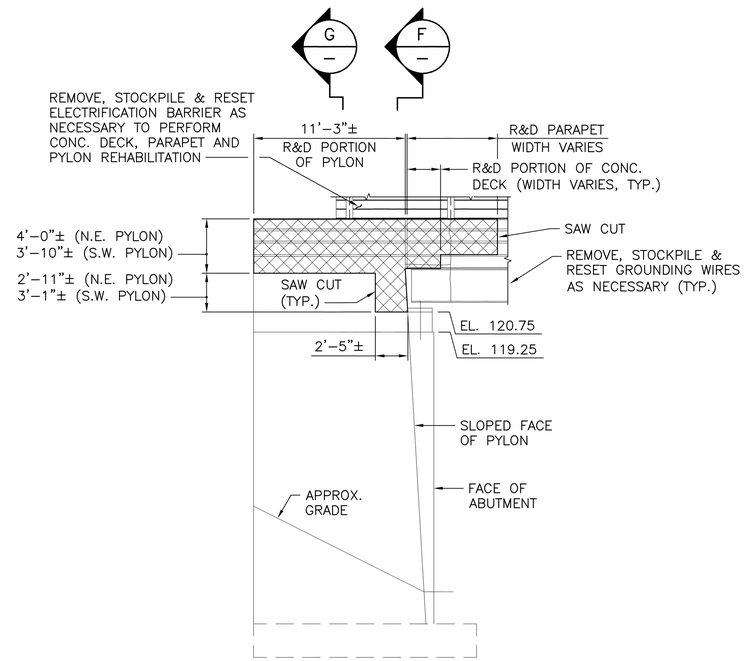

EXISTING

N.E. & S.W. PYLON – ELEVATION

SCALE: 3/16"=1'–0"

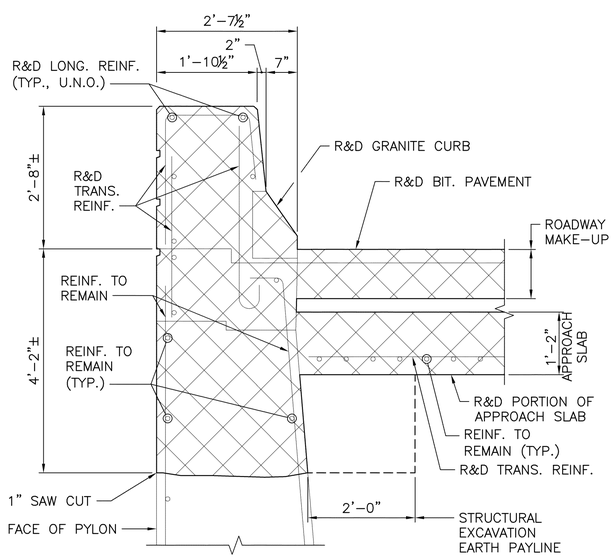

ABUTMENT PYLON – EXISTING

SECTION F/–

SCALE: 3/4"=1'–0"

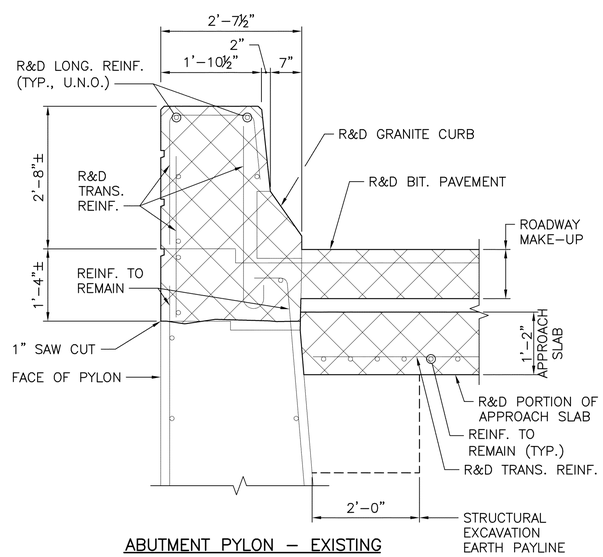

ABUTMENT PYLON – EXISTING

SECTION G/–

SCALE: 3/4"=1'–0"

LEGEND

DENOTES AREAS TO BE REMOVED AND DISPOSED

COMMONWEALTH
ENGINEERS & CONSULTANTS, INC.
400 SMITH STREET
PROVIDENCE, RI 02908

REVISIONS		
NO.	DATE	BY

RHODE ISLAND
DEPARTMENT OF TRANSPORTATION

STATEWIDE BRIDGE REPAIRS
CONTRACT 4 - AMTRAK BRIDGES
LAFAYETTE R.R. BRIDGE No. 243
NORTH KINGSTOWN, RHODE ISLAND

ABUTMENT PYLON DEMOLITION

CHECKED BY _____ DATE _____ SCALE AS SHOWN

0113R_V1_016_DEM0004

FED. ROAD DIV. NO.	STATE	FEDERAL AID PROJECT NO.	FISCAL YEAR	SHEET NO.	TOTAL SHEETS
–	RI	–	2019	17	82

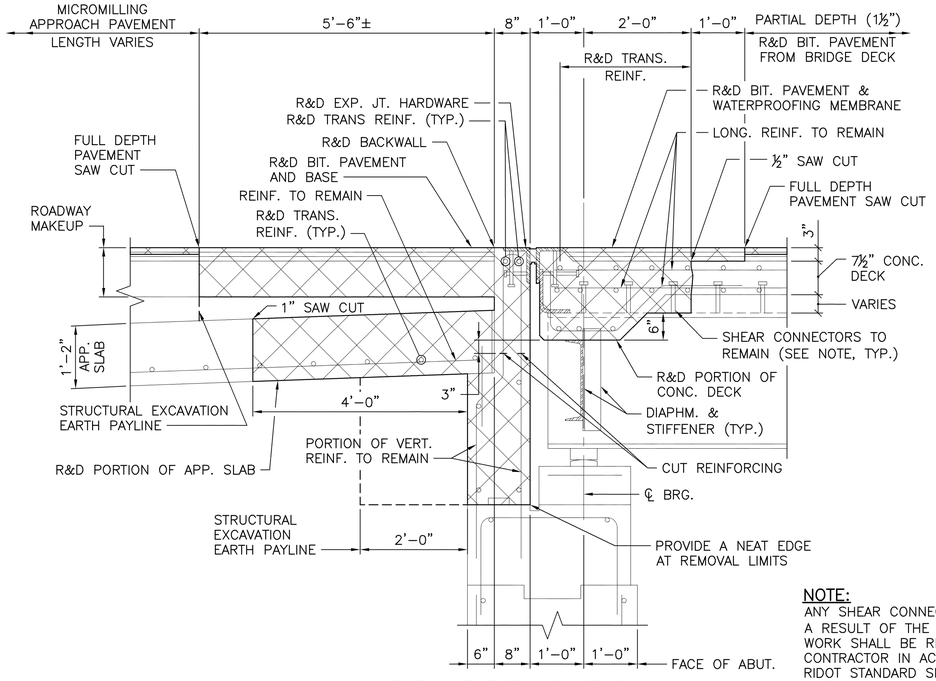

WEST ABUTMENT – EXISTING

SECTION A/13

SCALE:3/4"=1'–0"

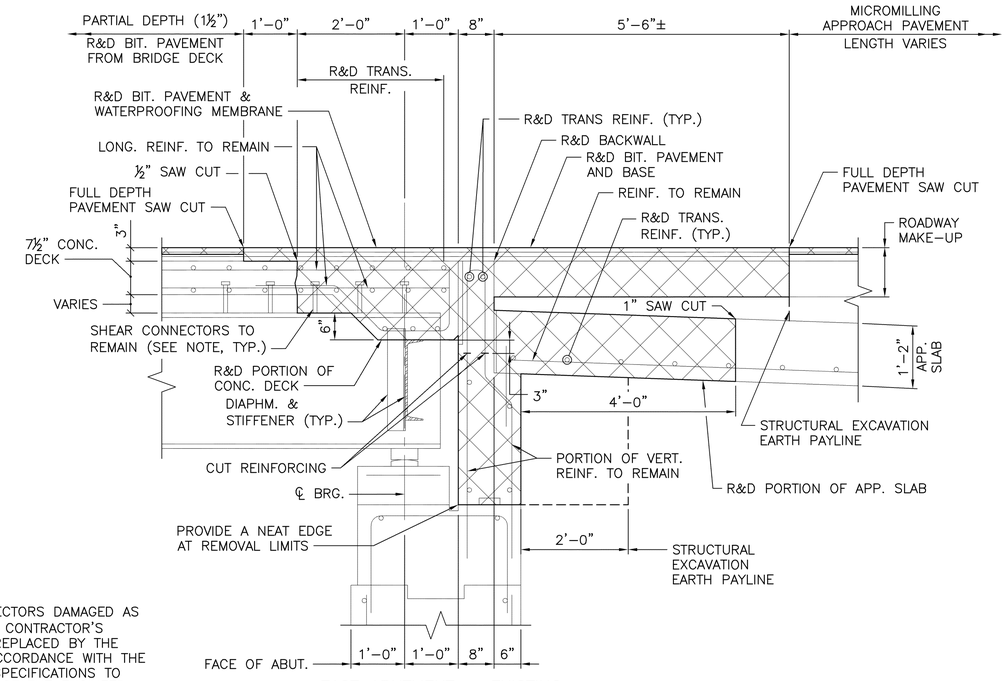

EAST ABUTMENT – EXISTING

SECTION B/14

SCALE:3/4"=1'–0"

NOTE:

ANY SHEAR CONNECTORS DAMAGED AS A RESULT OF THE CONTRACTOR'S WORK SHALL BE REPLACED BY THE CONTRACTOR IN ACCORDANCE WITH THE RIDOT STANDARD SPECIFICATIONS TO THE SATISFACTION OF THE ENGINEER AT NO ADDITIONAL COST TO THE STATE

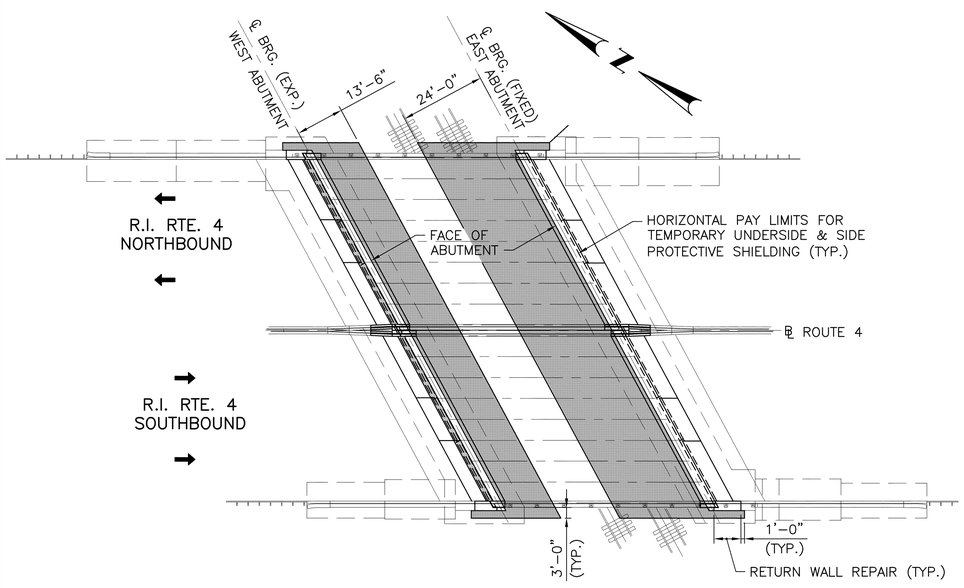

TEMPORARY DECK UNDERSIDE AND SIDE PROTECTIVE SHIELDING LOCATION PLAN

SCALE:1"=20'–0"

NOTES:

1. TEMPORARY DECK UNDERSIDE AND SIDE PROTECTIVE SHIELDING IS MANDATORY.
2. TEMPORARY DECK UNDERSIDE & SIDE PROTECTIVE SHIELDING SHALL BE IN ACCORDANCE WITH SECTION 803.0500 OF THE STANDARD SPECIFICATIONS.
3. REFER TO "TEMPORARY DECK UNDERSIDE & SIDE PROTECTIVE SHIELDING DETAIL" AND "TEMPORARY RETURN WALL SIDE PROTECTIVE SHIELDING DETAIL" ON "MISCELLANEOUS DETAILS SHEET 2" FOR ADDITIONAL INFORMATION AND THE VERTICAL PAY LIMITS FOR THE TEMPORARY DECK UNDERSIDE & SIDE PROTECTIVE SHIELDING.

LEGEND

DENOTES AREAS TO BE REMOVED AND DISPOSED

COMMONWEALTH ENGINEERS & CONSULTANTS, INC.
400 SMITH STREET
PROVIDENCE, RI 02908

REVISIONS		
NO.	DATE	BY

RHODE ISLAND
DEPARTMENT OF TRANSPORTATION

STATEWIDE BRIDGE REPAIRS
CONTRACT 4 - AMTRAK BRIDGES
LAFAYETTE R.R. BRIDGE No. 243
NORTH KINGSTOWN, RHODE ISLAND

DEMOLITION SECTIONS AND PROTECTIVE SHIELDING

CHECKED BY _____ DATE _____ SCALE AS SHOWN

0113R_V1_017_DEM0005

FED. ROAD DIV. NO.	STATE	FEDERAL AID PROJECT NO.	FISCAL YEAR	SHEET NO.	TOTAL SHEETS
–	RI	–	2019	18	82

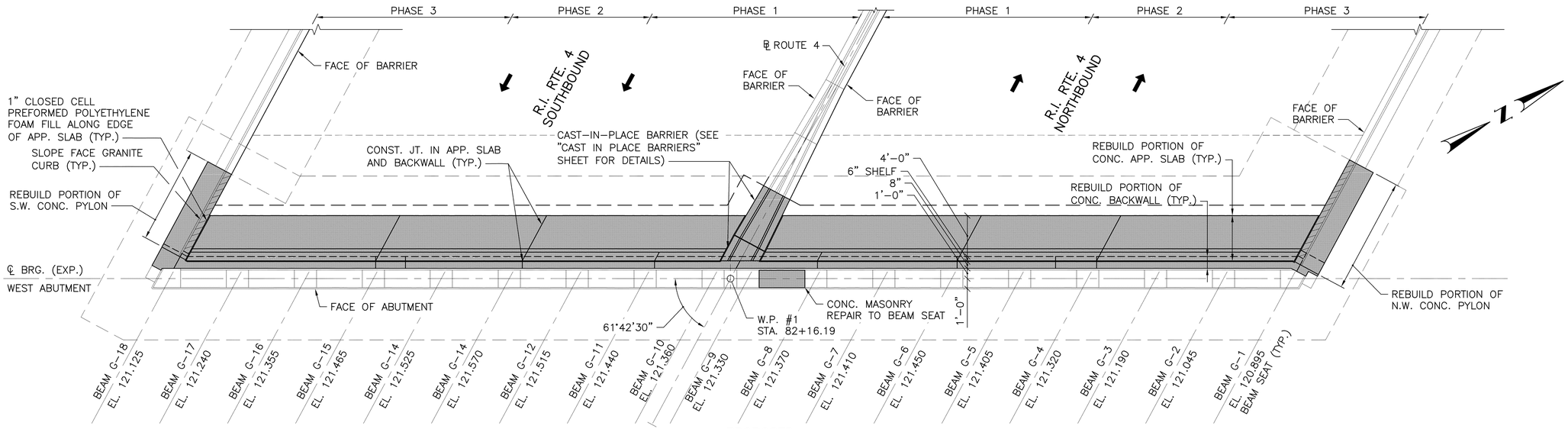

PROPOSED
WEST ABUTMENT – PLAN
SCALE: 3/16"=1'-0"

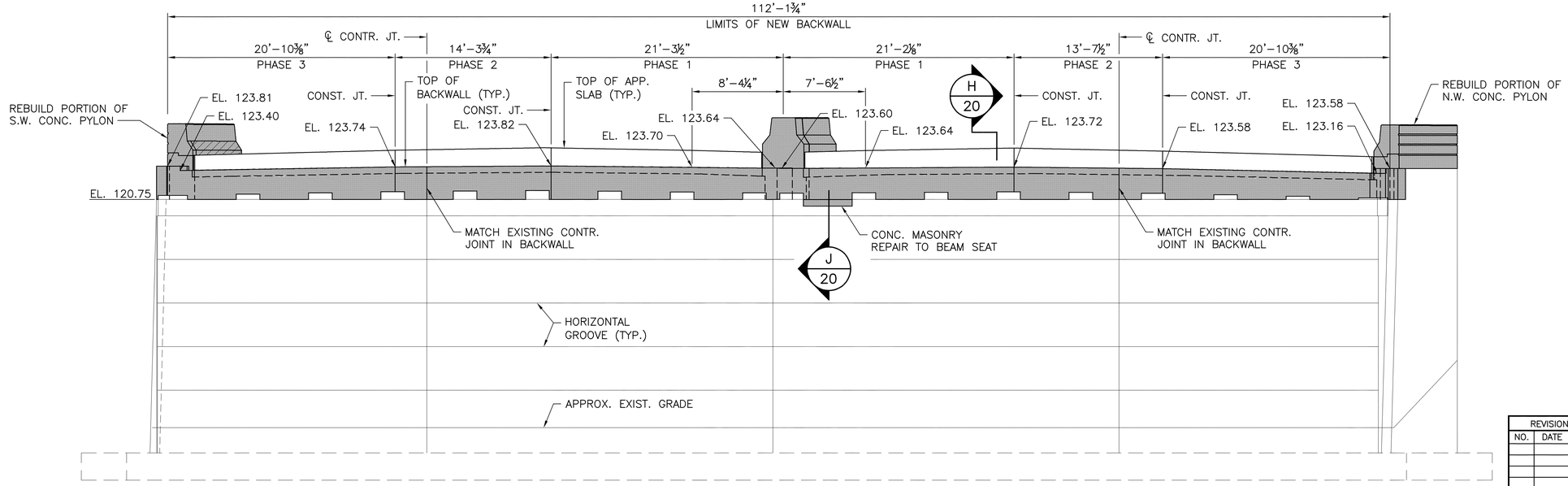

PROPOSED
WEST ABUTMENT – ELEVATION
SCALE: 3/16"=1'-0"

LEGEND

DENOTES AREAS OF NEW CONCRETE

REVISIONS		
NO.	DATE	BY

RHODE ISLAND
DEPARTMENT OF TRANSPORTATION

STATEWIDE BRIDGE REPAIRS
CONTRACT 4 - AMTRAK BRIDGES
LAFAYETTE R.R. BRIDGE No. 243
NORTH KINGSTOWN, RHODE ISLAND

WEST ABUTMENT REHABILITATION

COMMONWEALTH ENGINEERS & CONSULTANTS, INC.
400 SMITH STREET
PROVIDENCE, RI 02908

CHECKED BY _____ DATE _____ SCALE AS SHOWN

0113R_V1_018_ABUTMENT001

FED. ROAD DIV. NO.	STATE	FEDERAL AID PROJECT NO.	FISCAL YEAR	SHEET NO.	TOTAL SHEETS
–	RI	–	2019	19	82

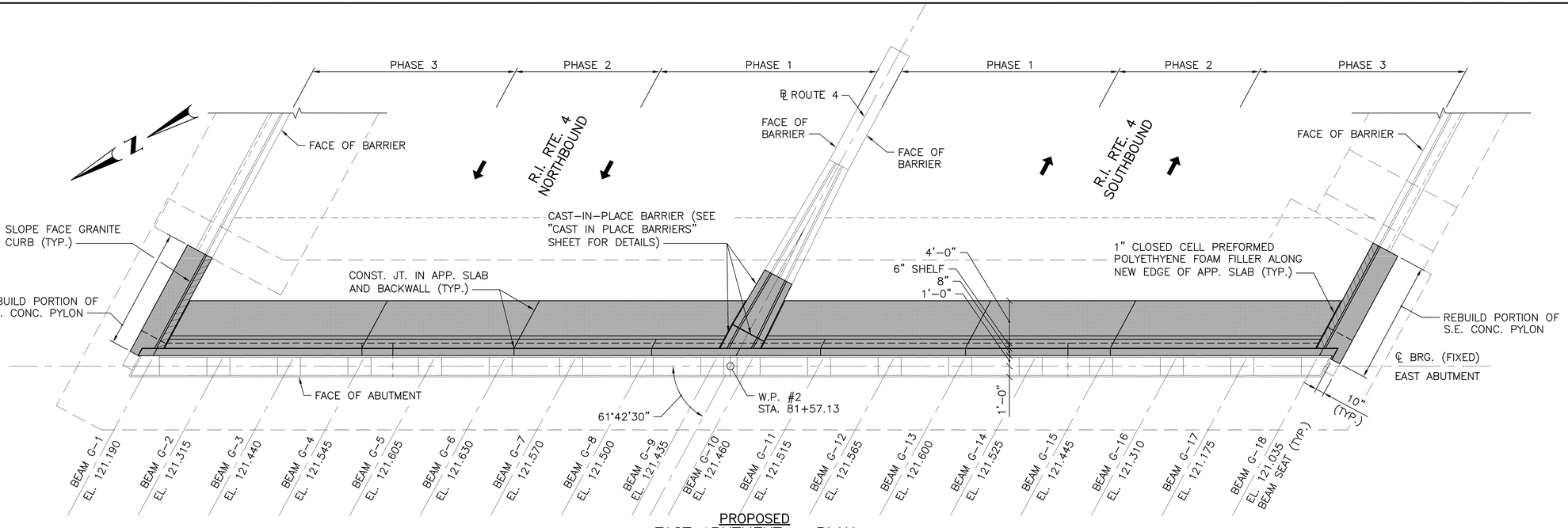

PROPOSED
EAST ABUTMENT – PLAN
SCALE: 3/16"=1'-0"

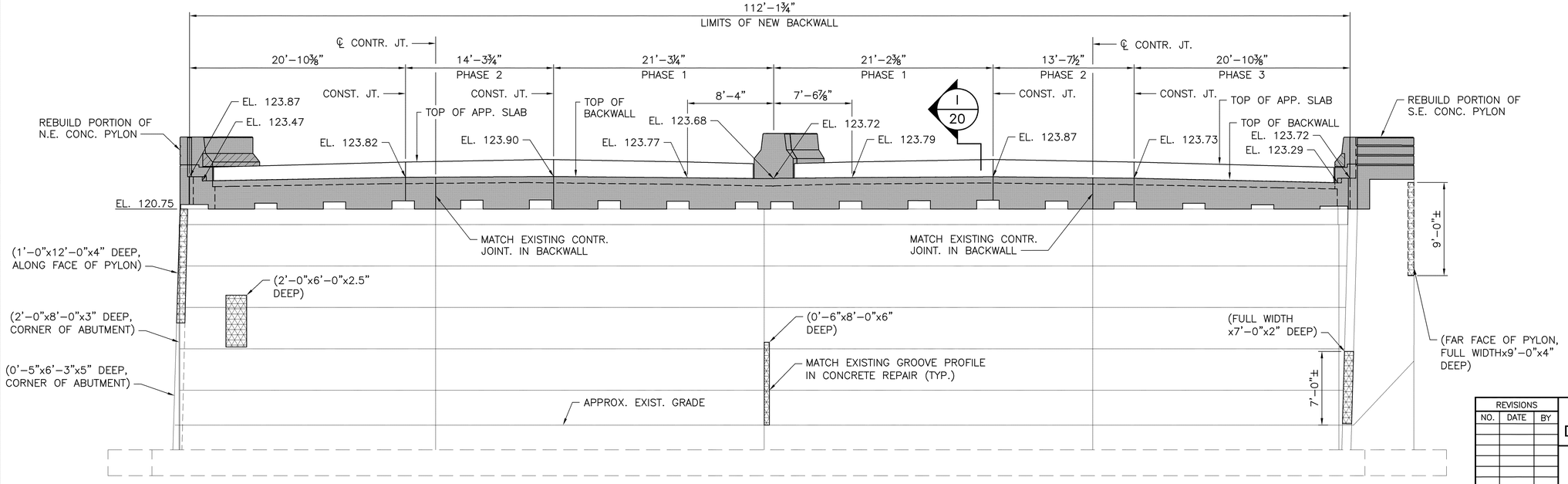

PROPOSED
EAST ABUTMENT – ELEVATION
SCALE: 3/16"=1'-0"

NOTE:
REPAIR AREAS SHOWN ARE APPROXIMATE. ACTUAL REPAIR LIMITS TO BE DETERMINED BY THE ENGINEER.

LEGEND

- DENOTES AREAS OF NEW CONCRETE
- DENOTES AREAS OF STRUCTURAL CONCRETE MASONRY REPAIR

REVISIONS		
NO.	DATE	BY

RHODE ISLAND
DEPARTMENT OF TRANSPORTATION

STATEWIDE BRIDGE REPAIRS
CONTRACT 4 - AMTRAK BRIDGES
LAFAYETTE R.R. BRIDGE No. 243
NORTH KINGSTOWN, RHODE ISLAND

EAST ABUTMENT REHABILITATION

COMMONWEALTH ENGINEERS & CONSULTANTS, INC.
400 SMITH STREET
PROVIDENCE, RI 02908

CHECKED BY _____ DATE _____ SCALE AS SHOWN

0113R_V1_019_ABUTMENT002

FED. ROAD DIV. NO.	STATE	FEDERAL AID PROJECT NO.	FISCAL YEAR	SHEET NO.	TOTAL SHEETS
–	RI	–	2019	20	82

R–1

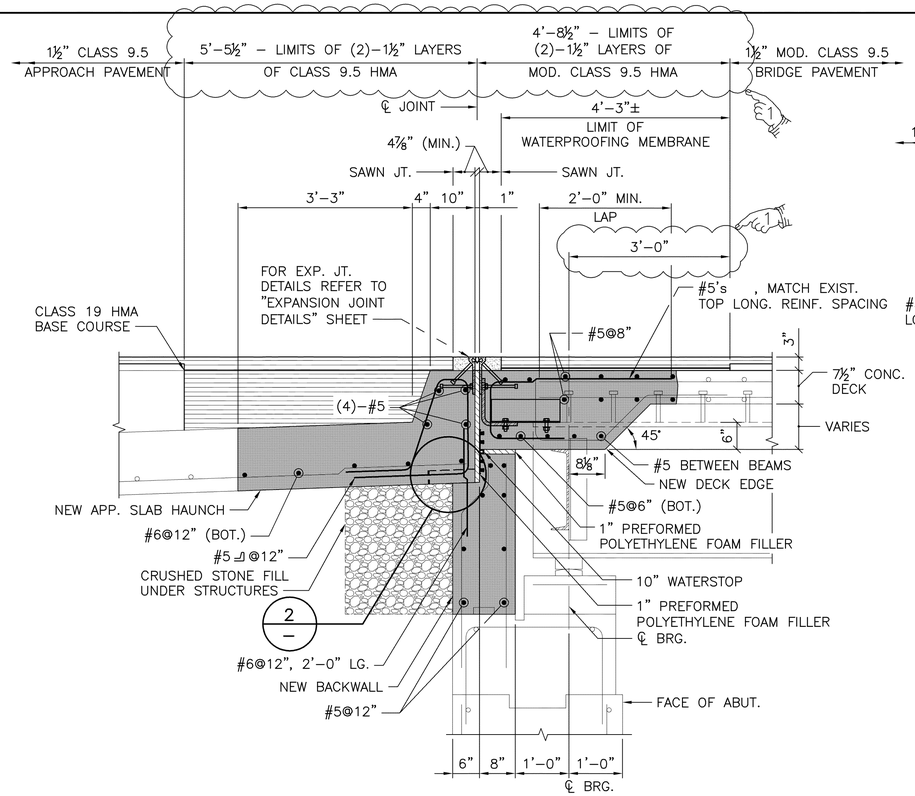

WEST ABUTMENT – PROPOSED

SECTION H/18

SCALE:3/4"=1'–0"

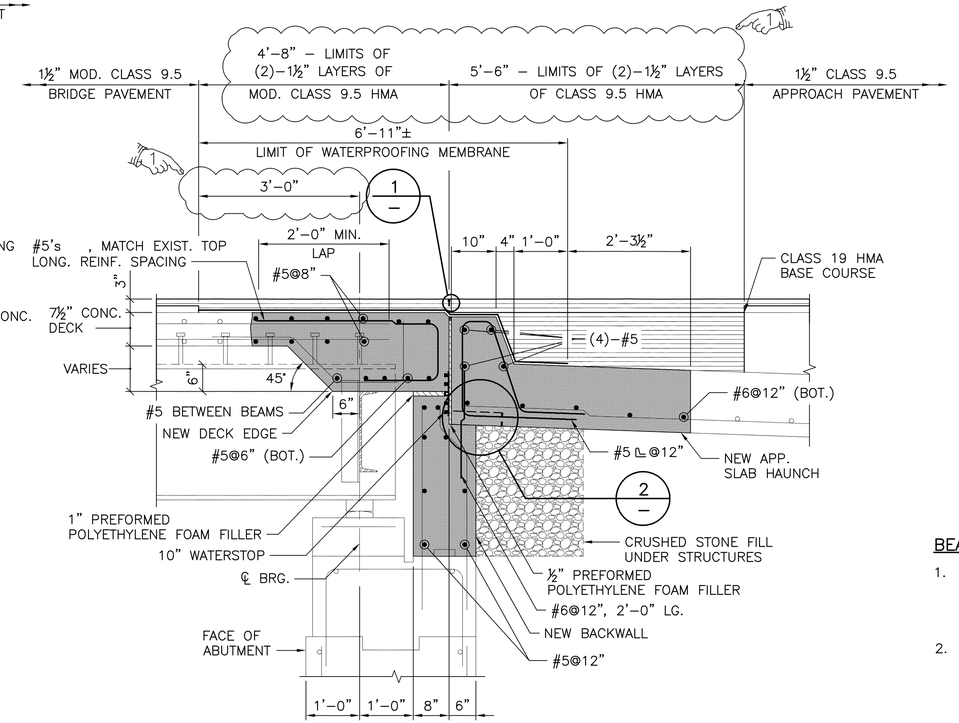

EAST ABUTMENT – PROPOSED

SECTION I/19

SCALE:3/4"=1'–0"

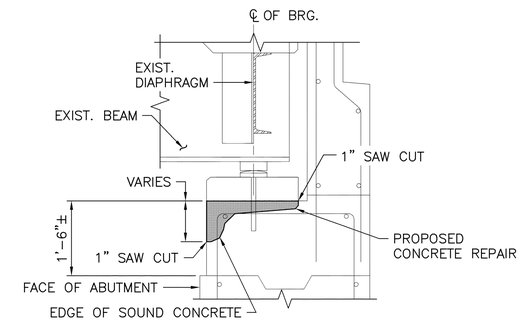

WEST ABUTMENT – PROPOSED

SECTION J/18

SCALE: 3/4"=1'–0"

BEAM SEAT REPAIR NOTES:

1. DURING THE REMOVAL OF THE LOOSE AND DELAMINATED CONCRETE THE CONTRACTOR SHALL AVOID OVER BREAKING THE CONCRETE TO MINIMIZE THE UNDERMINING OF THE EXISTING BEARING PEDESTAL.
2. THE ENGINEER WILL BE THE BE THE SOLE JUDGE IN DETERMINING THE LIMITS FOR THE CONCRETE REMOVAL.

NOTE:

EXISTING REBARS HAVING LOST ¼ OR MORE OF THEIR ORIGINAL DIAMETER SHALL BE SUPPLEMENTED BY NEW GALVANIZED REBARS PLACED PARALLEL TO EXISTING REINFORCING.

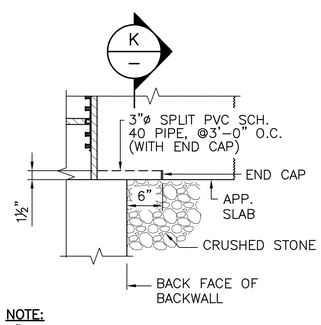

NOTE:

3"ø PVC PIPE WITH END CAP SHALL BE INCLUDED FOR PAYMENT WITH PLACEMENT OF THE APPROACH SLAB CONCRETE AND WILL NOT BE MEASURED SEPARATELY FOR PAYMENT

DETAIL 2/–

NOT TO SCALE

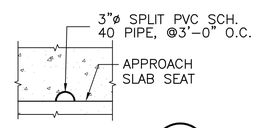

SECTION K/–

NOT TO SCALE

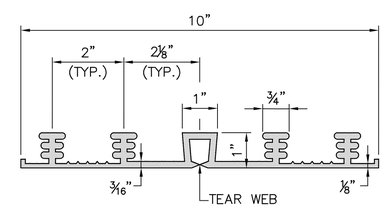

NOTES:

1. WATERSTOP SHALL BE IN ACCORDANCE WITH SECTION 812 OF THE STANDARD SPECIFICATIONS AND SHALL BE INCLUDED IN THE COST OF BACKWALL CONCRETE.
2. WATERSTOP SHALL BE CONTINUOUS, WITHOUT JOINTS, FOR FULL WIDTH OF DECK

PVC WATERSTOP DETAIL

NOT TO SCALE

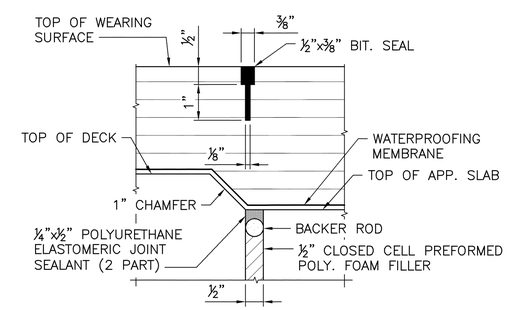

SAW AND SEAL IN BITUMINOUS PAVEMENT

DETAIL 1/–

NOT TO SCALE

LEGEND

DENOTES AREAS OF NEW CONCRETE

REVISIONS		
NO.	DATE	BY
1	1/30/19	DT

RHODE ISLAND
DEPARTMENT OF TRANSPORTATION

STATEWIDE BRIDGE REPAIRS
CONTRACT 4 - AMTRAK BRIDGES
LAFAYETTE R.R. BRIDGE No. 243
NORTH KINGSTOWN, RHODE ISLAND

JOINT REPAIR DETAILS

COMMONWEALTH ENGINEERS & CONSULTANTS, INC.
400 SMITH STREET
PROVIDENCE, RI 02908

CHECKED BY _____ DATE _____ SCALE AS SHOWN

ADDENDUM No. 2

0113R_V1_020_CONCDETL001_ADD02

FED. ROAD DIV. NO.	STATE	FEDERAL AID PROJECT NO.	FISCAL YEAR	SHEET NO.	TOTAL SHEETS
–	RI	–	2019	21	82

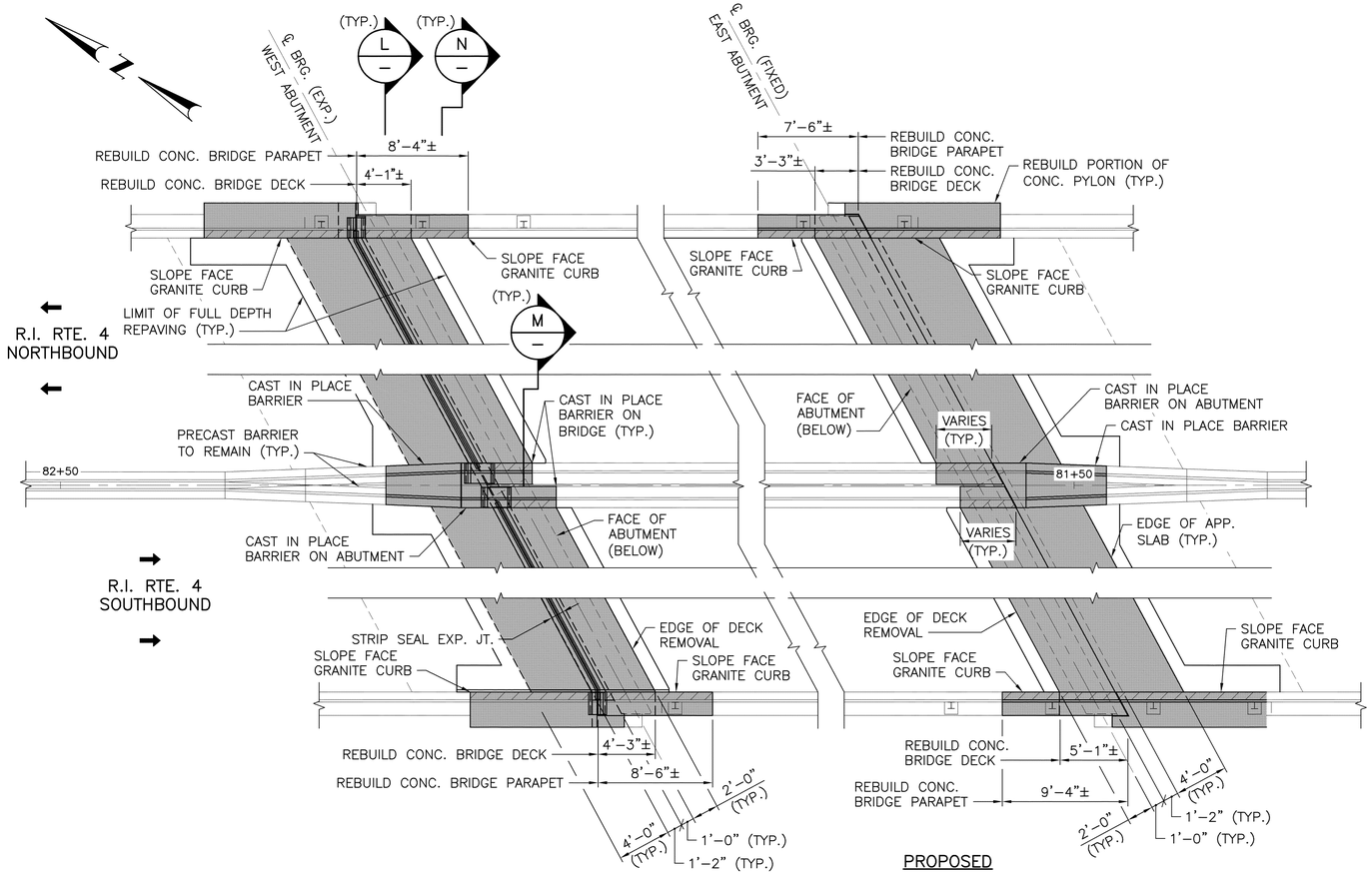

PROPOSED

BRIDGE REHABILITATION – PARTIAL PLAN

SCALE: 3/16"=1'–0"

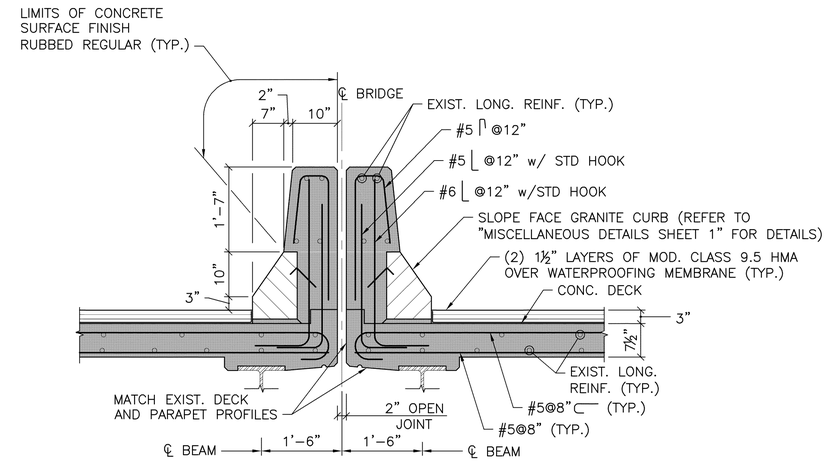

SECTION M

SCALE: ¾"=1'–0"

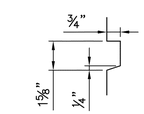

DETAIL 3

NOT TO SCALE

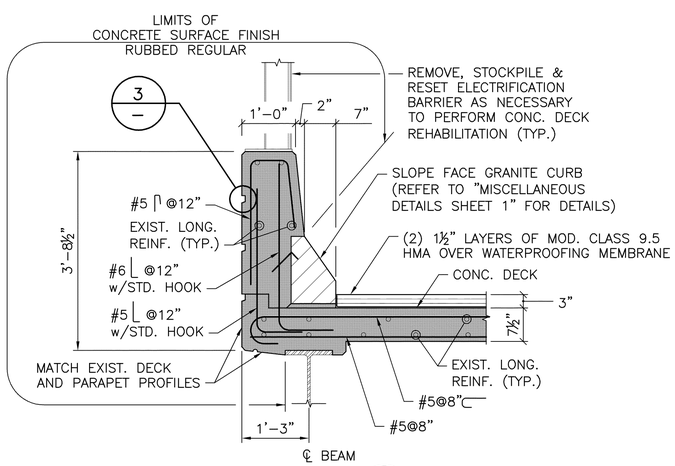

SECTION L

SCALE: ¾"=1'–0"

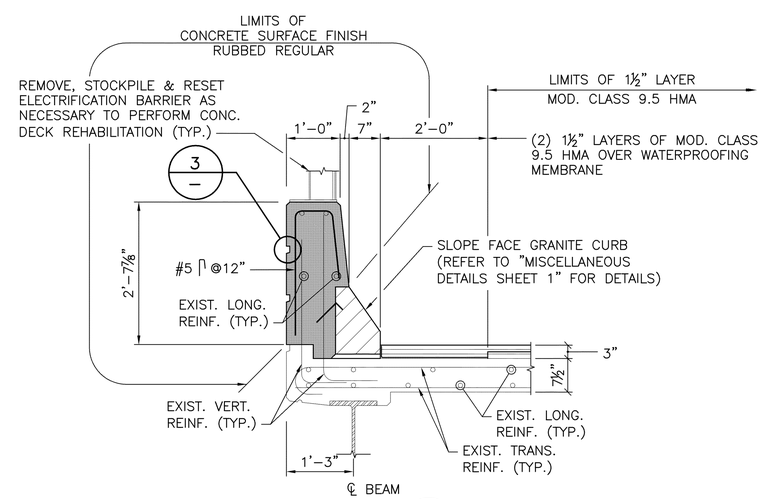

SECTION N

SCALE: ¾"=1'–0"

LEGEND

DENOTES AREAS OF NEW CONCRETE

COMMONWEALTH ENGINEERS & CONSULTANTS, INC.
400 SMITH STREET
PROVIDENCE, RI 02908

REVISIONS		
NO.	DATE	BY

RHODE ISLAND
DEPARTMENT OF TRANSPORTATION

STATEWIDE BRIDGE REPAIRS
CONTRACT 4 - AMTRAK BRIDGES
LAFAYETTE R.R. BRIDGE No. 243
NORTH KINGSTOWN, RHODE ISLAND

DECK REPAIR DETAILS

CHECKED BY _____ DATE _____ SCALE AS SHOWN

0113R_V1_021_CONCDETL002

FED. ROAD DIV. NO.	STATE	FEDERAL AID PROJECT NO.	FISCAL YEAR	SHEET NO.	TOTAL SHEETS
–	RI	–	2019	22	82

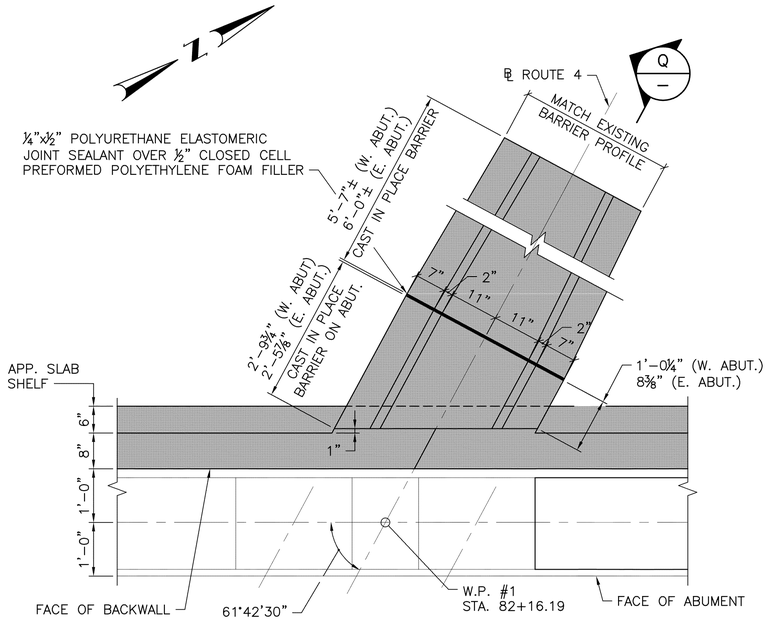

PLAN

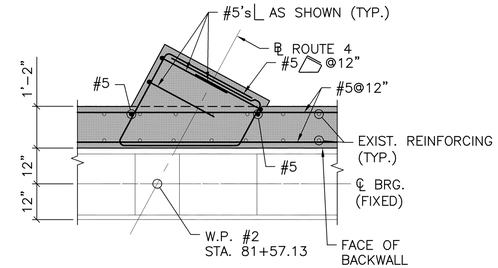

PROPOSED

SECTION O

SCALE:1/2"=1'-0"

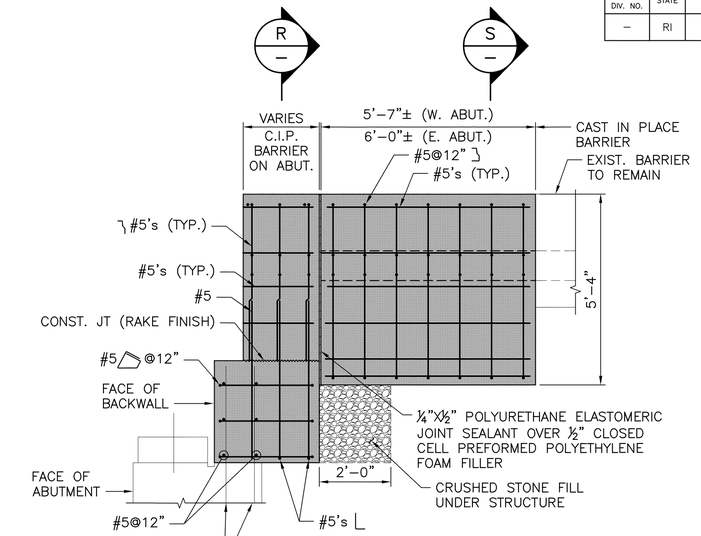

PROPOSED

SECTION Q

SCALE: ½"=1'-0"

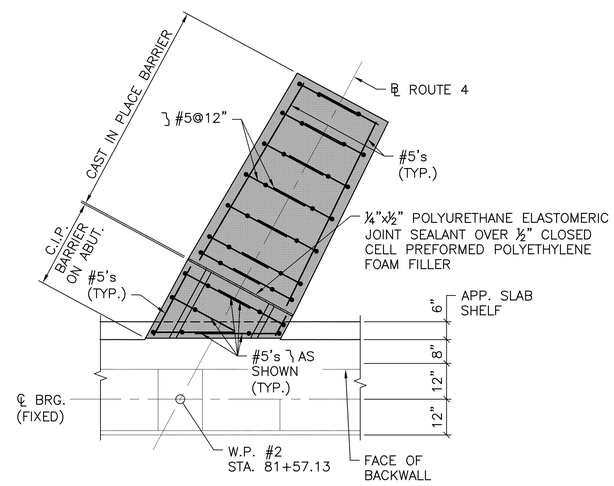

PROPOSED

SECTION P

SCALE:1/2"=1'-0"

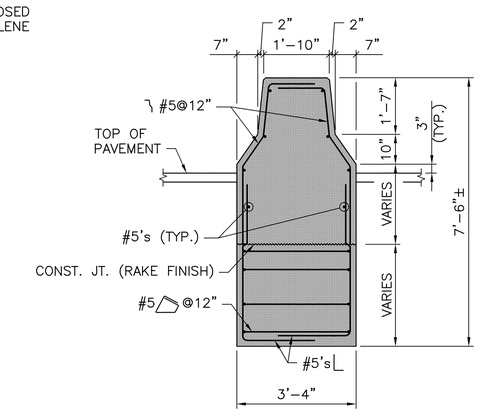

PROPOSED

SECTION R

SCALE: ½"=1'-0"

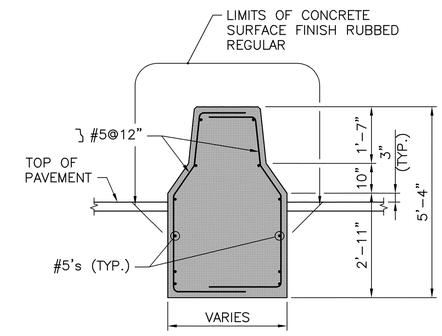

PROPOSED

SECTION S

SCALE: ½"=1'-0"

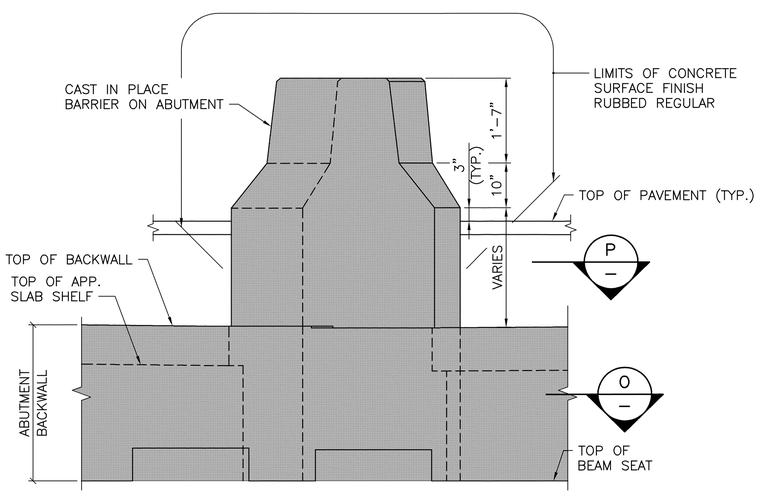

NOTES:

1. CAST IN PLACE BARRIER AND APPROACH SLAB (BEYOND) NOT SHOWN FOR CLARITY.
2. WEST ABUTMENT SHOWN, EAST ABUTMENT SIMILAR.

ELEVATION

CAST IN PLACE BARRIER ON ABUTMENT

SCALE:3/4"=1'-0"

REVISIONS		
NO.	DATE	BY

RHODE ISLAND
DEPARTMENT OF TRANSPORTATION

STATEWIDE BRIDGE REPAIRS
CONTRACT 4 - AMTRAK BRIDGES
LAFAYETTE R.R. BRIDGE No. 243
NORTH KINGSTOWN, RHODE ISLAND

CAST IN PLACE BARRIERS

COMMONWEALTH ENGINEERS & CONSULTANTS, INC.
400 SMITH STREET
PROVIDENCE, RI 02908

CHECKED BY _____ DATE _____ SCALE AS SHOWN

0113R_V1_022_CONCDETL003

FED. ROAD DIV. NO.	STATE	FEDERAL AID PROJECT NO.	FISCAL YEAR	SHEET NO.	TOTAL SHEETS
–	RI	–	2019	23	82

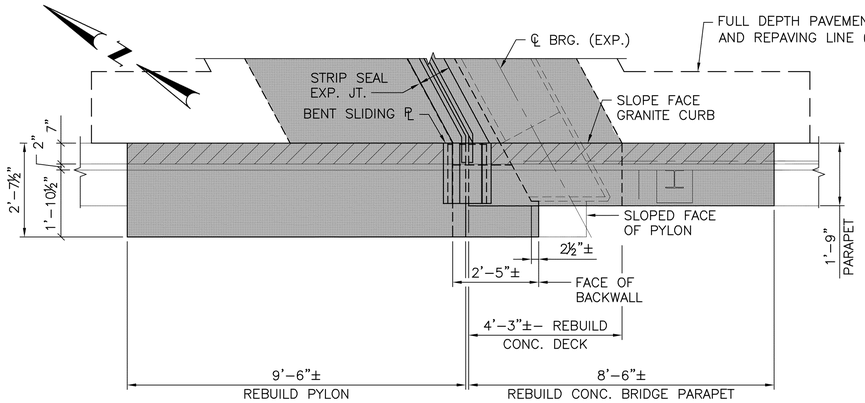

PROPOSED
S.W. PYLON – PLAN
SCALE:½"=1'–0"

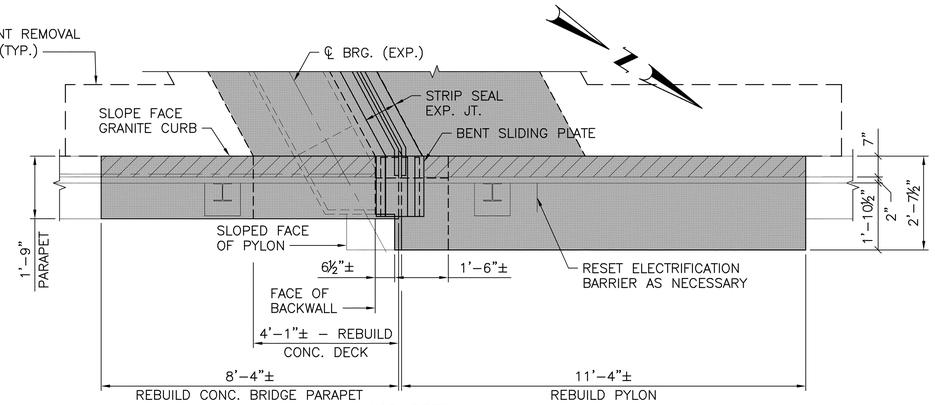

PROPOSED
N.W. PYLON – PLAN
SCALE:½"=1'–0"

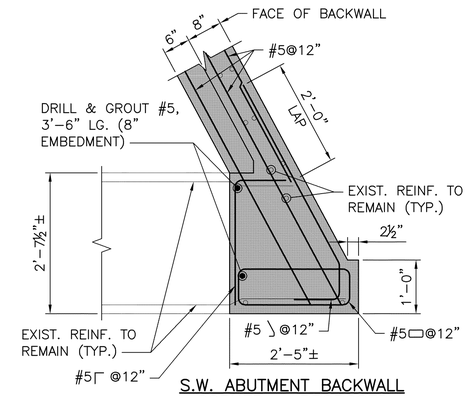

S.W. ABUTMENT BACKWALL CORNER – PROPOSED
SECTION U/– SCALE:3/4"=1'–0"

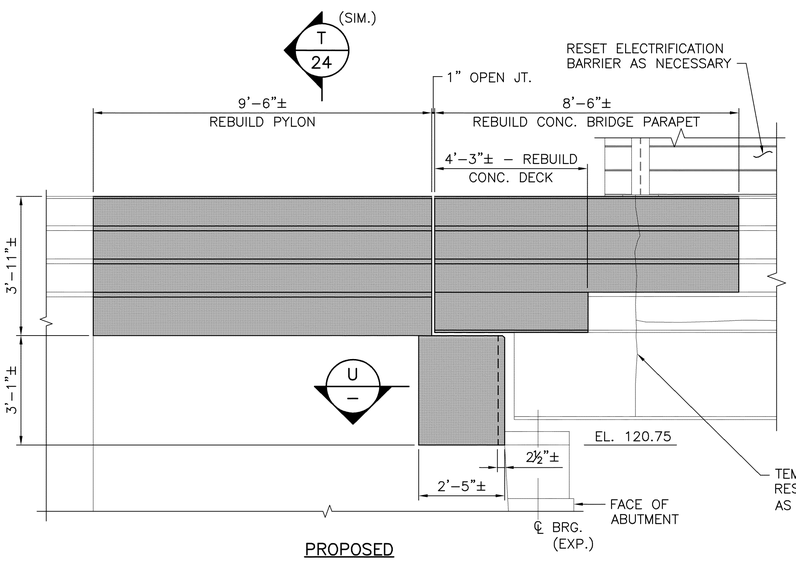

PROPOSED
S.W. PYLON – ELEVATION
SCALE:½"=1'–0"

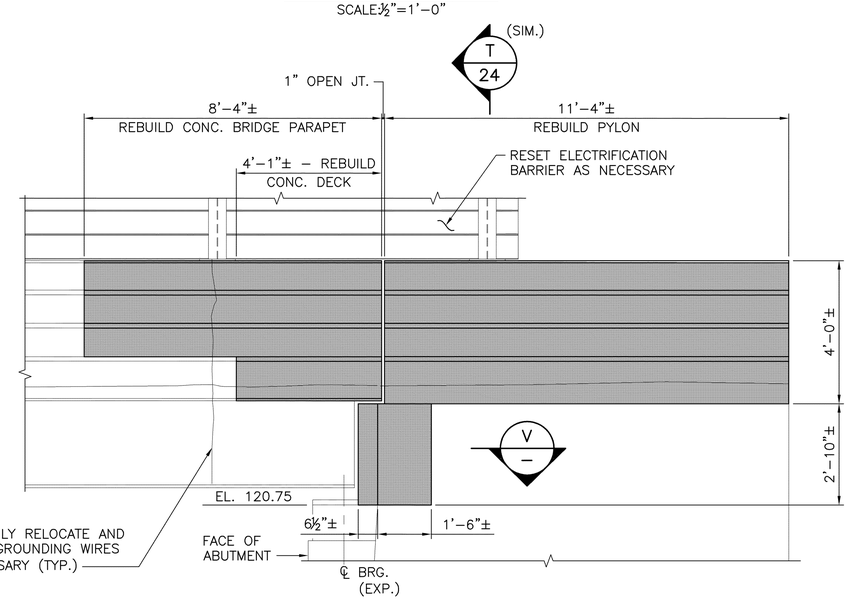

PROPOSED
N.W. PYLON – ELEVATION
SCALE:½"=1'–0"

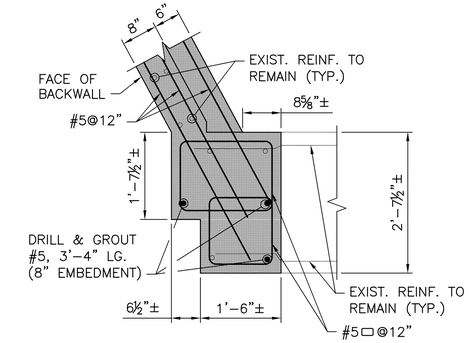

N.W. ABUTMENT BACKWALL CORNER – PROPOSED
SECTION V/– SCALE:3/4"=1'–0"

LEGEND

DENOTES AREAS OF NEW CONCRETE

COMMONWEALTH ENGINEERS & CONSULTANTS, INC.
400 SMITH STREET
PROVIDENCE, RI 02908

REVISIONS		
NO.	DATE	BY

RHODE ISLAND
DEPARTMENT OF TRANSPORTATION

STATEWIDE BRIDGE REPAIRS
CONTRACT 4 - AMTRAK BRIDGES
LAFAYETTE R.R. BRIDGE No. 243
NORTH KINGSTOWN, RHODE ISLAND

WEST ABUTMENT PYLON REHABILITATION

CHECKED BY _____ DATE _____ SCALE AS SHOWN

0113R_V1_023_CONCDETL004

FED. ROAD DIV. NO.	STATE	FEDERAL AID PROJECT NO.	FISCAL YEAR	SHEET NO.	TOTAL SHEETS
–	RI	–	2019	24	82

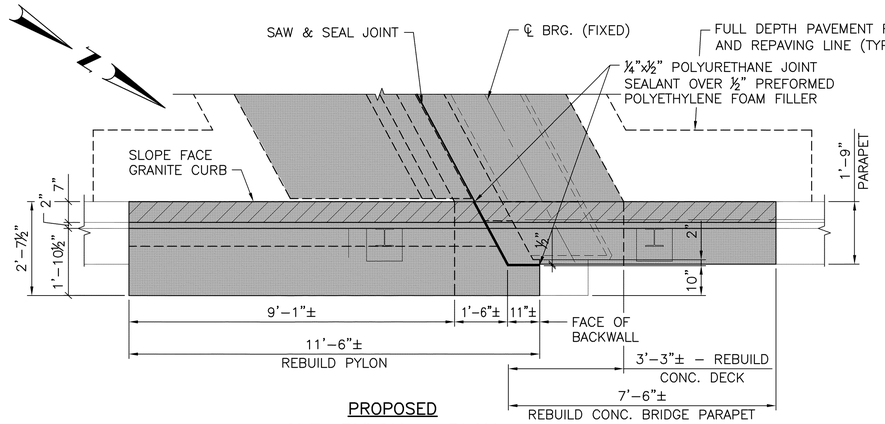

PROPOSED
N.E. PYLON – PLAN
SCALE:½"=1'-0"

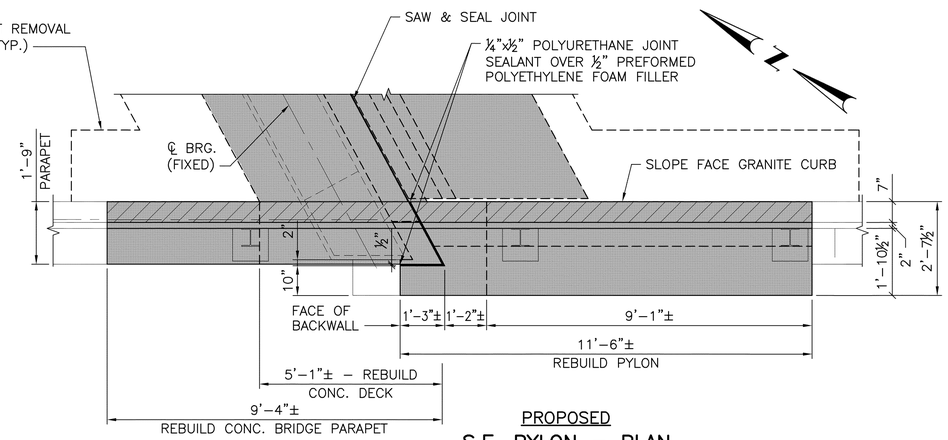

PROPOSED
S.E. PYLON – PLAN
SCALE:½"=1'-0"

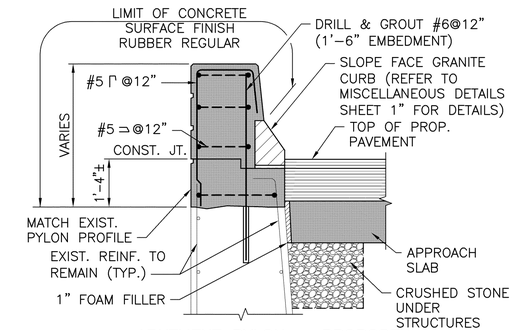

ABUTMENT PYLON – PROPOSED
SECTION T/– T/23
SCALE:1/2"=1'-0"

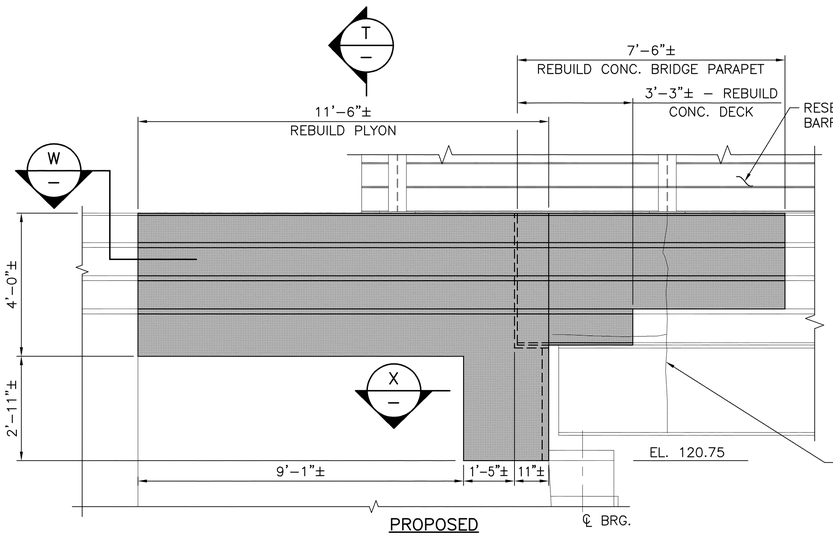

PROPOSED
N.E. PYLON – ELEVATION
SCALE:½"=1'-0"

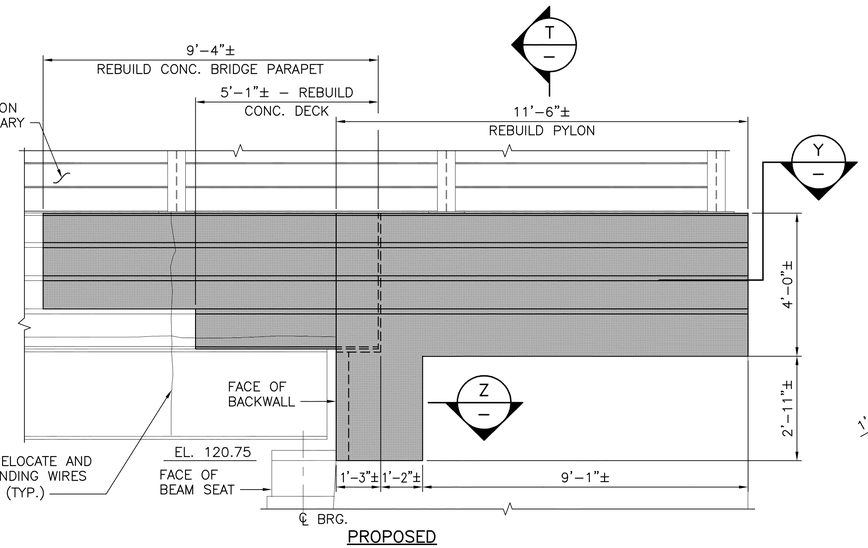

PROPOSED
S.E. PYLON – ELEVATION
SCALE:½"=1'-0"

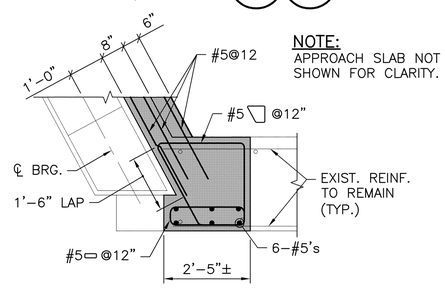

NOTE:
APPROACH SLAB NOT SHOWN FOR CLARITY.

ABUTMENT PYLON – PROPOSED
SECTION Z/–
SCALE:1/2"=1'-0"

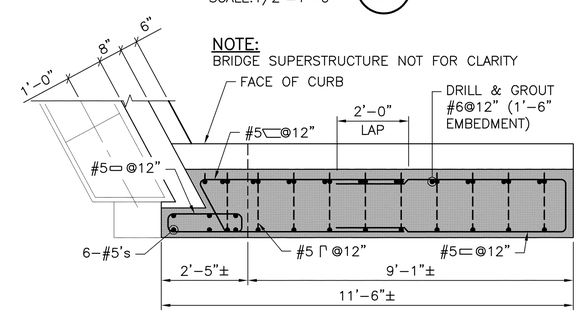

NOTE:
BRIDGE SUPERSTRUCTURE NOT FOR CLARITY

ABUTMENT PYLON – PROPOSED
SECTION Y/–
SCALE:1/2"=1'-0"

NOTE:
APPROACH SLAB NOT SHOWN FOR CLARITY

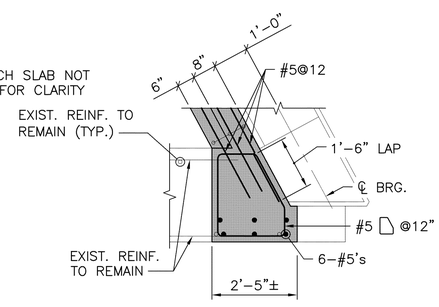

ABUTMENT PYLON – PROPOSED
SECTION X/–
SCALE:1/2"=1'-0"

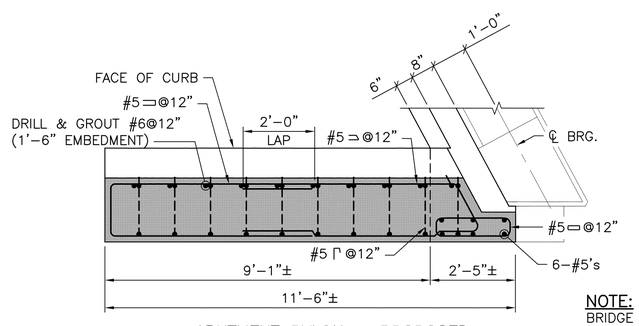

ABUTMENT PYLON – PROPOSED
SECTION W/–
SCALE:1/2"=1'-0"

NOTE:
BRIDGE SUPERSTRUCTURE NOT FOR CLARITY

LEGEND

DENOTES AREAS OF NEW CONCRETE

COMMONWEALTH ENGINEERS & CONSULTANTS, INC.
400 SMITH STREET
PROVIDENCE, RI 02908

REVISIONS		
NO.	DATE	BY

RHODE ISLAND
DEPARTMENT OF TRANSPORTATION

STATEWIDE BRIDGE REPAIRS
CONTRACT 4 - AMTRAK BRIDGES
LAFAYETTE R.R. BRIDGE No. 243
NORTH KINGSTOWN, RHODE ISLAND

EAST ABUTMENT PYLON REHABILITATION

CHECKED BY _____ DATE _____ SCALE AS SHOWN

0113R_V1_024_CONCDETL005

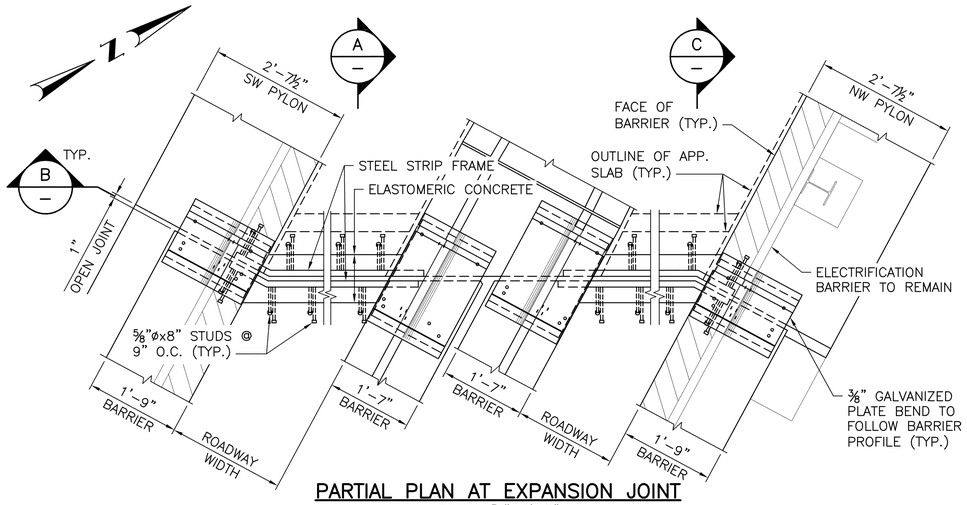

PARTIAL PLAN AT EXPANSION JOINT

SCALE: ¾"=1'-0"

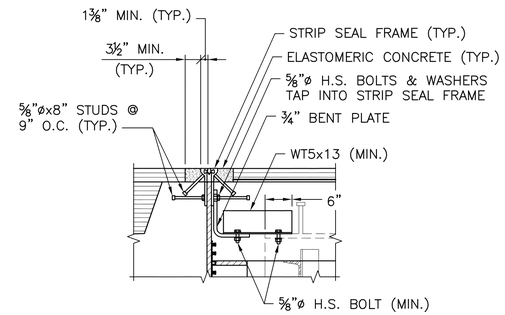

NOTE:
CONTRACTOR SHALL COORDINATE WITH STRIP SEAL JOINT MANUFACTURER AS REQUIRED TO ENSURE THAT STRIP SEAL FRAME IS ADEQUATELY SUPPORTED DURING PLACEMENT OF BRIDGE AND APPROACH SLAB CONCRETE

SECTION AT ABUTMENT STRIP SEAL IN ELASTOMERIC CONCRETE

SECTION C — SCALE:3/4"=1'-0"

NOTES:

1. INSTALL CONTINUOUS NEOPRENE STRIP SEAL IN FIELD. FIELD SPLICING OF STRIP SEAL IS NOT PERMITTED. TEMPORARY SEALS SHALL BE PROVIDED UPON COMPLETION OF PHASE 1 CONSTRUCTION. ALL COSTS ASSOCIATED WITH FURNISHING, INSTALLING, REMOVAL AND DISPOSAL OF TEMPORARY SEALS SHALL BE INCLUDED WITH THE CONTRACT UNIT PRICE PER LINEAR FOOT FOR ITEM CODE 823.1760, "STRIP SEAL EXPANSION JOINT ASSEMBLIES". TEMPORARY SEALS WILL NOT BE PAID FOR SEPARATELY.
2. THE ENTIRE EXPANSION STRIP SEAL FRAME SHALL BE ASSEMBLED, ERECTED AND SET TO GRADE PRIOR TO POURING THE DECK CONCRETE. THE EXPANSION DAM SHALL BE CONSTRUCTED TO FOLLOW THE ROADWAY GRADE AND CROSS SLOPE.
3. ALL STRUCTURAL STEEL COMPONENTS SHALL CONFORM TO AASHTO DESIGNATION M 270, GRADE 36. THE STUDS SHALL BE ASTM DESIGNATION A 108, AND SHALL BE WELDED BY THE PRESSURE PROCESS.
4. AFTER THE COMPLETION OF ALL WELDING OPERATIONS, ALL STEEL ASSEMBLIES SHALL BE GALVANIZED OR METALIZED.
5. THE NEOPRENE STRIP SEAL SHALL BE BONDED TO THE SEAL FRAME WITH AN APPROVED ADHESIVE IN ACCORDANCE WITH THE MANUFACTURER'S RECOMMENDATIONS.
6. THE TRANSVERSE BUTT WELDS FOR SPLICING OF THE STEEL FRAME SHALL BE PARTIAL PENETRATION DOUBLE V-GROOVE WELDS ON PREPARED BEVELED EDGES EXTENDING ALL AROUND THE JOINT AS FAR AS PRACTICAL TO ACHIEVE A WATERTIGHT SEAL. THE INSIDE OF THE SEAL CAVITY SHALL NOT BE WELDED. WHERE A TRANSVERSE JOINT OCCURS, TWO ADDITIONAL ANCHORS MUST BE ADDED ON EACH SIDE OF THE JOINT.
7. THE MOVEMENT CLASSIFICATION OF THE JOINT SHALL NOT BE LESS THAN THE CLASSIFICATION SPECIFIED ON THE DRAWINGS.
8. ELASTOMERIC CONCRETE BLOCKOUT SHALL BE SANDBLASTED, CLEANED WITH COMPRESSED OILLESS AIR, AND PRIMED WITH BONDING COMPOUND PRIOR TO CASTING ELASTOMERIC CONCRETE.
9. THE SEALS FURNISHED WITH THE STRIP SEAL FRAME MUST BE COMPATIBLE WITH THE STEEL FRAME AND MUST PROVIDE A WATERTIGHT JOINT.
10. PLACE BARRIERS AND PYLONS WITH STEEL SLIDING PLATES, WITH INSERTS AND BOLTS IN PLACE TO INSURE ALIGNMENT OF INSERTS WITH HOLES IN THE STEEL SLIDING PLATES. REMOVE PLATES TO INSTALL SEAL. APPLY BOND BREAKER TO SLIDING PLATES PRIOR TO INSTALLATION.
11. THE DETAILS SHOWN HERE ARE INTENDED AS A GENERAL GUIDE FOR A TYPICAL GLANDULAR TYPE STRIP SEAL JOINT SYSTEM. SHOP DRAWINGS WHICH INCLUDE DETAILS OF THE GLAND SHAPE, STEEL EXTRUSION SHAPE, WELDING PROCEDURE SPECIFICATIONS, ANCHOR ARRANGEMENT, TEMPERATURE CORRECTION REQUIREMENTS, AND TEMPORARY SUPPORT DETAILS SHALL BE SUBMITTED FOR APPROVAL OF THE ENGINEER ACCORDING TO THE STANDARD SPECIFICATIONS.

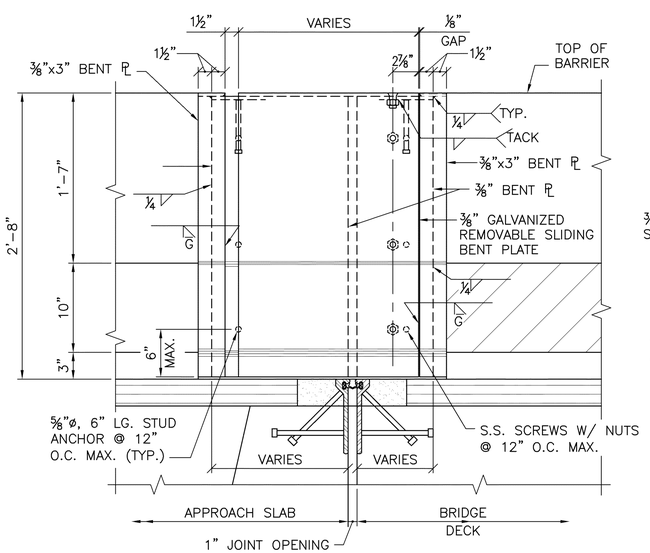

ELEVATION AT MEDIAN BARRIER

SECTION A — SCALE:1 1/2"=1'-0"

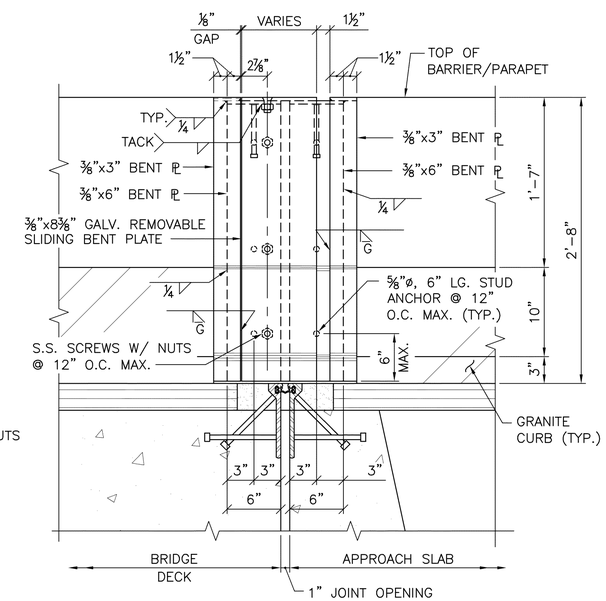

ELEVATION AT BARRIER/PARAPET

SECTION D — SCALE:1 1/2"=1'-0"

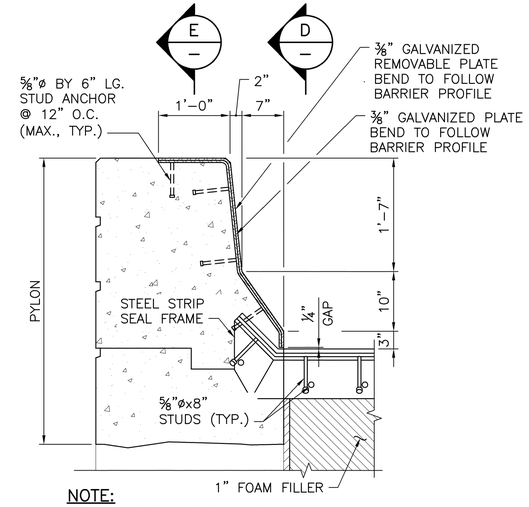

NOTE:
SECTION SHOWN AT PYLONS, SECTION THRU MEDIAN BARRIERS SIMILAR

SECTION B — SCALE:1"=1'-0"

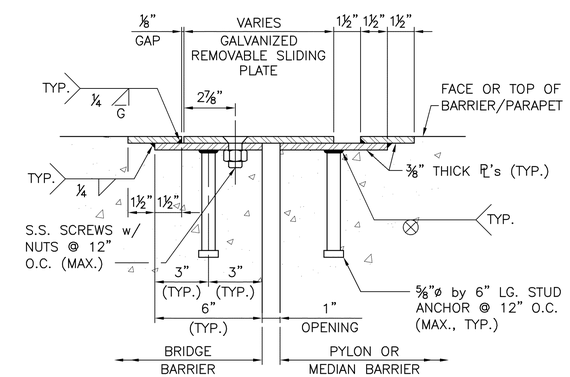

SECTION THRU SLIDING PLATES

SECTION E — SCALE:3"=1'-0"

REVISIONS		
NO.	DATE	BY

RHODE ISLAND
DEPARTMENT OF TRANSPORTATION

STATEWIDE BRIDGE REPAIRS
CONTRACT 4 - AMTRAK BRIDGES
LAFAYETTE R.R. BRIDGE No. 243
NORTH KINGSTOWN, RHODE ISLAND

EXPANSION JOINT DETAILS

COMMONWEALTH ENGINEERS & CONSULTANTS, INC.
400 SMITH STREET
PROVIDENCE, RI 02908

CHECKED BY _____ DATE _____ SCALE AS SHOWN

FED. ROAD DIV. NO.	STATE	FEDERAL AID PROJECT NO.	FISCAL YEAR	SHEET NO.	TOTAL SHEETS
–	RI	–	2019	26	82

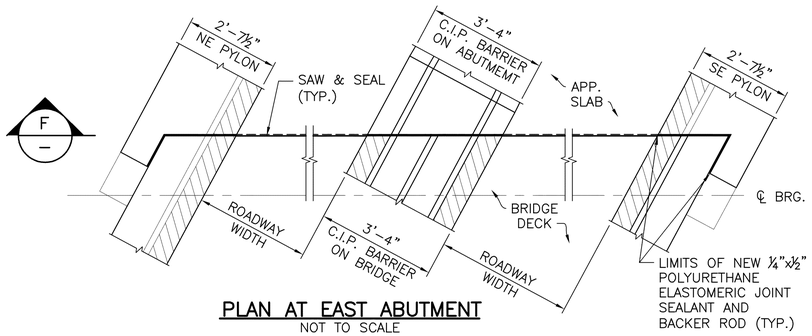

PLAN AT EAST ABUTMENT

NOT TO SCALE

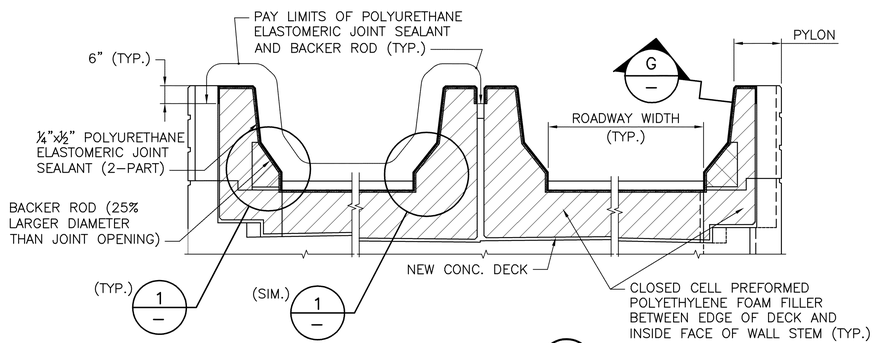

SECTION F/–

SCALE:1/2"=1'-0"

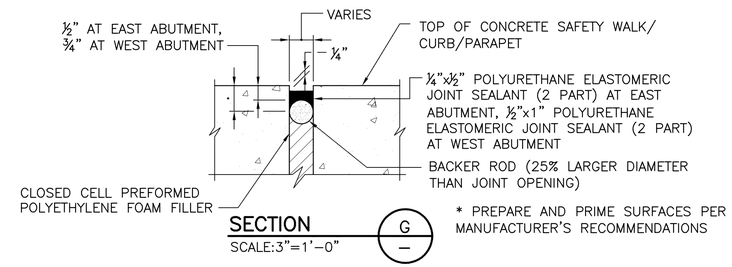

SECTION G/–

SCALE:3"=1'-0"

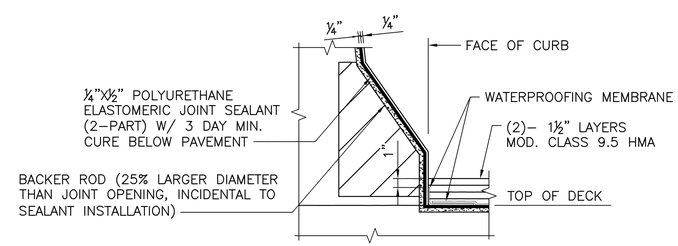

DETAIL 1/–

NOT TO SCALE

REVISIONS		
NO.	DATE	BY

RHODE ISLAND
DEPARTMENT OF TRANSPORTATION

STATEWIDE BRIDGE REPAIRS
CONTRACT 4 - AMTRAK BRIDGES
LAFAYETTE R.R. BRIDGE No. 243
NORTH KINGSTOWN, RHODE ISLAND

PARAPET AND BARRIER CURB JOINT DETAILS

COMMONWEALTH
ENGINEERS & CONSULTANTS, INC.
400 SMITH STREET
PROVIDENCE, RI 02908

CHECKED BY _____ DATE _____ SCALE AS SHOWN

0113R_V1_026_JNTDETL002

FED. ROAD DIV. NO.	STATE	FEDERAL AID PROJECT NO.	FISCAL YEAR	SHEET NO.	TOTAL SHEETS
–	RI	–	2019	27	82

STEEL BEAM REPAIR NOTES:

1. FOR LOCATION OF STRUCTURAL STEEL REPAIRS, SEE "FRAMING PLAN" THIS SHEET.
2. UNLESS OTHERWISE APPROVED BY THE ENGINEER, ALL BOLT HOLES IN NEW STRUCTURAL STEEL COMPONENTS SHALL BE SHOP DRILLED, 13/16" DIAMETER HOLES.
3. ALL BOLT HOLES IN EXISTING STRUCTURAL STEEL MEMBERS SHALL BE FIELD DRILLED 13/16" DIAMETER.
4. THE EXACT LOCATION OF FIELD DRILLED BOLT HOLES TO BE DETERMINED IN THE FIELD.
5. WHERE BOLT LOCATIONS COINCIDE WITH HEAVILY DETERIORATED PORTIONS OF THE WEB OR FLANGE (MATERIAL LOSS GREATER THAN 1/8"), THE BOLTS SHALL HAVE DOUBLE NUTS. THE FIRST NUT SHALL BE SEATED SNUG TIGHT AGAINST THE SURFACE AND THEN HELD IN PLACE WITH A WRENCH WHILE TIGHTENING A SECOND NUT AGAINST IT.
6. LIMIT OF PAINTING EXISTING STRUCTURAL STEEL SHALL INCLUDE THE ENTIRE PERIMETER OF THE EXISTING BEAM, TO THE LIMITS SHOWN ON THE PLANS., INCLUDING THE EXPOSED SURFACES, AREAS OF THE BEARINGS AND ANCHOR BOLTS.
7. ALL STEEL REPAIRS SHALL BE PERFORMED AFTER THE EXISTING STEEL BEAMS HAVE BEEN SURFACE PREPPED AND PRIMED AND PRIOR TO THE APPLICATION OF THE FINISH COAT OF PAINT.
8. ALL NEW STEEL COMPONENTS SHALL RECEIVE A SHOP APPLIED COAT OF PRIMER. TOP COATS OF PAINT SHALL BE FIELD APPLIED AFTER INSTALLATION OF STEEL REPAIR COMPONENTS.
9. CONTRACTOR SHALL FIELD VERIFY EXISTING CONDITIONS AND PROPOSED REPAIR DIMENSIONS PRIOR TO FABRICATING STEEL REPAIRS. PROPOSED REPAIR COMPONENTS SHALL BE DETAILED AND SUBMITTED WITH REQUIRED SHOP DRAWINGS FOR REVIEW AND APPROVAL PRIOR TO FABRICATION.
10. THE CONTRACTOR SHALL BE RESPONSIBLE FOR OVERALL FIT OF ALL FIELD BOLTED CONNECTIONS. BOLT SPACING SHOWN MAY NEED TO BE ADJUSTED BASED ON ACTUAL FIELD CONDITIONS. FINAL BOLT SPACING AND DETAILS SHALL BE SUBMITTED WITH THE REQUIRED SHOP DRAWINGS FOR REVIEW AND APPROVAL PRIOR TO FABRICATION.
11. ALL AREAS OF EXISTING STRUCTURAL STEEL WITH SECTION LOSS, HOLES, VOIDS, ETC. SHALL BE FILLED WITH STRUCTURAL EPOXY RESIN PASTE PRIOR TO INSTALLING REPAIR PLATES.

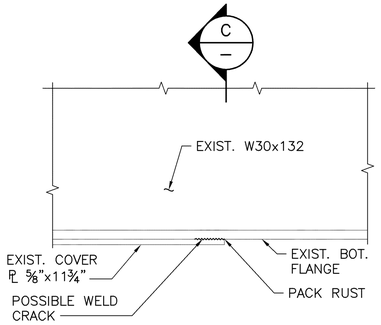

PARTIAL ELEVATION
SCALE: 1 1/2"=1'–0"

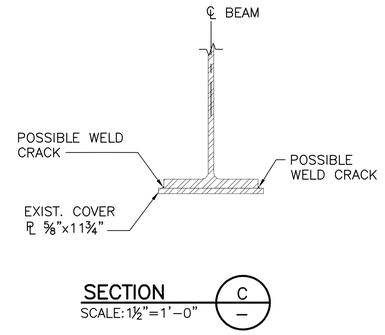

SECTION
SCALE: 1 1/2"=1'–0"

COVER PLATE END REPAIR – EXISTING CONDITIONS

SCALE: 1 1/2"=1'–0"

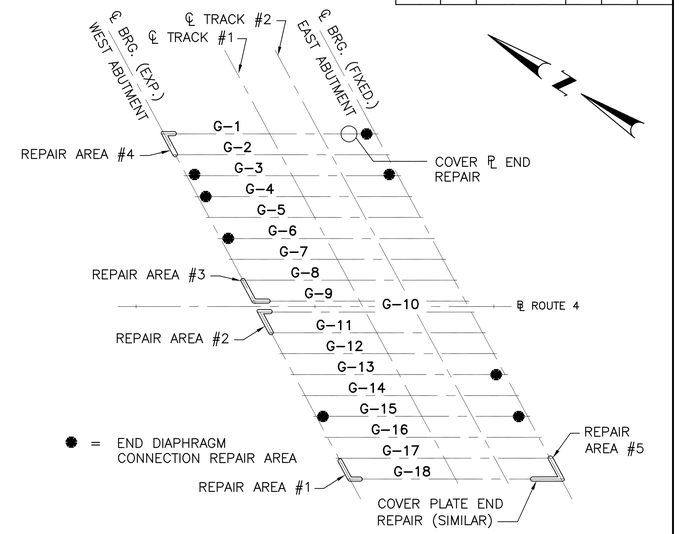

FRAMING PLAN
SCALE: 1"=20'–0"

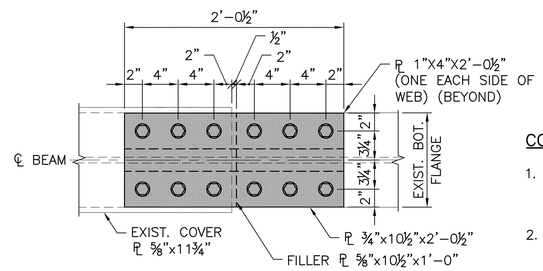

PLAN VIEW – UNDERSIDE OF BEAM
SCALE: 1 1/2"=1'–0"

COVER PLATE END REPAIR NOTES:

1. REFER TO SPECIAL PROVISION 824.9922 "COVER PLATE END REPAIR–BRIDGE NO. 243" FOR REPAIR PROCEDURE.
2. THE WORK ASSOCIATED WITH THE INSTALLATION OF THE BOLTED STEEL REPAIR PLATES SHALL BE INCLUDED FOR PAYMENT UNDER ITEM 824.9920 "STEEL BEAM/GIRDER REPAIRS – BRIDGE NO. 243".

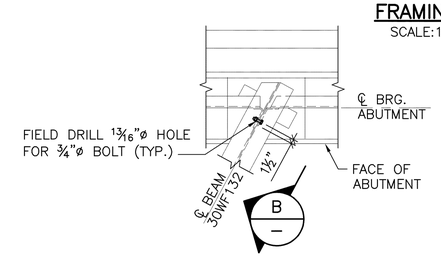

ABUTMENT – PLAN
SCALE: 1/2"=1'–0"

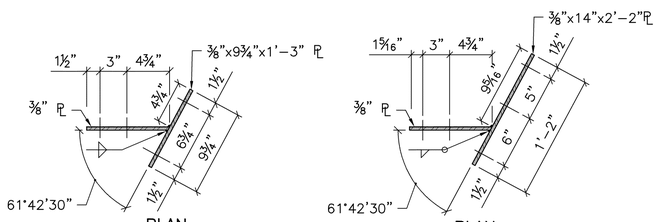

PLAN PLAN

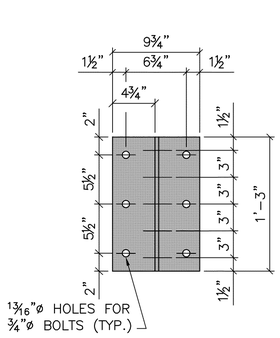

FRONT ELEVATION
BRACKET #1 DETAIL
SCALE: 1 1/2"=1'–0"

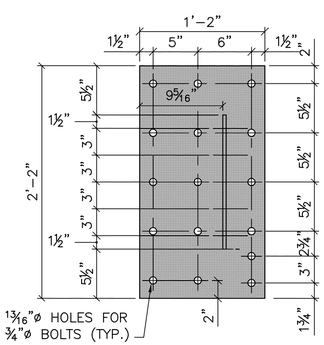

FRONT ELEVATION
BRACKET #2 DETAIL
SCALE: 1 1/2"=1'–0"

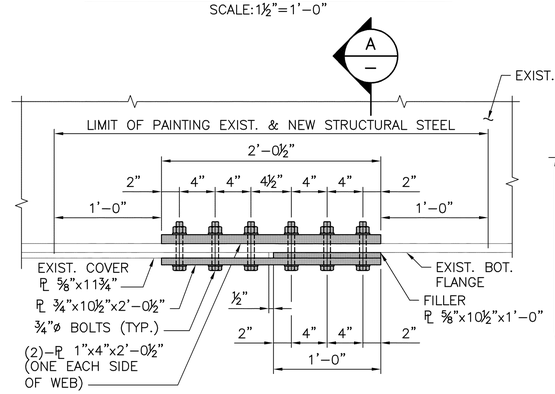

PARTIAL ELEVATION
SCALE: 1 1/2"=1'–0"

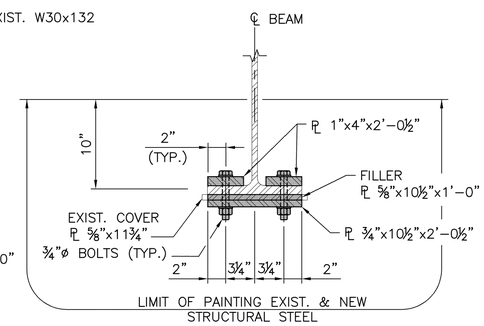

SECTION
SCALE: 1 1/2"=1'–0"

NOTE:
G–1 REPAIR SHOWN. REFER TO "STEEL BEAM REPAIRS SHEET 5" FOR G–18 REPAIR.

COVER PLATE END REPAIR – PROPOSED

SCALE: 1 1/2"=1'–0"

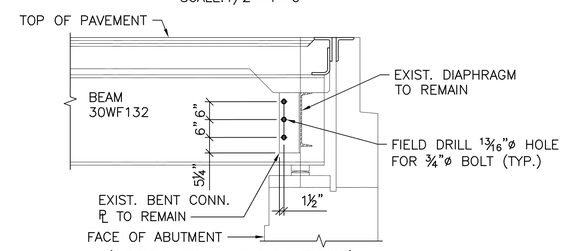

(PROPOSED – 8 LOCATIONS)

SECTION
SCALE: 1/2"=1'–0"

END DIAPHRAGM CONNECTION REPAIR

LEGEND

DENOTES NEW STEEL COMPONENTS

COMMONWEALTH ENGINEERS & CONSULTANTS, INC.
400 SMITH STREET
PROVIDENCE, RI 02908

REVISIONS		
NO.	DATE	BY

RHODE ISLAND
DEPARTMENT OF TRANSPORTATION

STATEWIDE BRIDGE REPAIRS
CONTRACT 4 - AMTRAK BRIDGES
LAFAYETTE R.R. BRIDGE No. 243
NORTH KINGSTOWN, RHODE ISLAND

FRAMING PLAN, NOTES AND DETAILS

CHECKED BY _____ DATE _____ SCALE AS SHOWN

0113R_V1_027_STELDETL001

FED. ROAD DIV. NO.	STATE	FEDERAL AID PROJECT NO.	FISCAL YEAR	SHEET NO.	TOTAL SHEETS
–	RI	–	2019	28	82

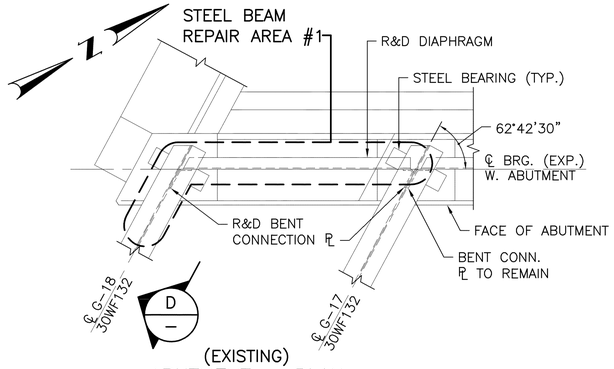

(EXISTING)
ABUTMENT – PLAN
SCALE:1/2"=1'-0"

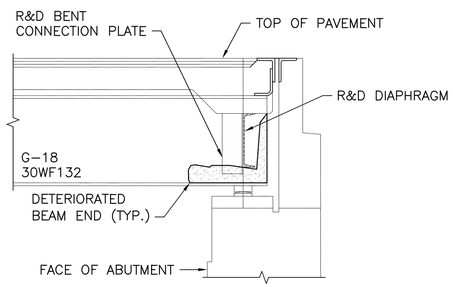

(EXISTING)
SECTION D/–
SCALE:1/2"=1'-0"

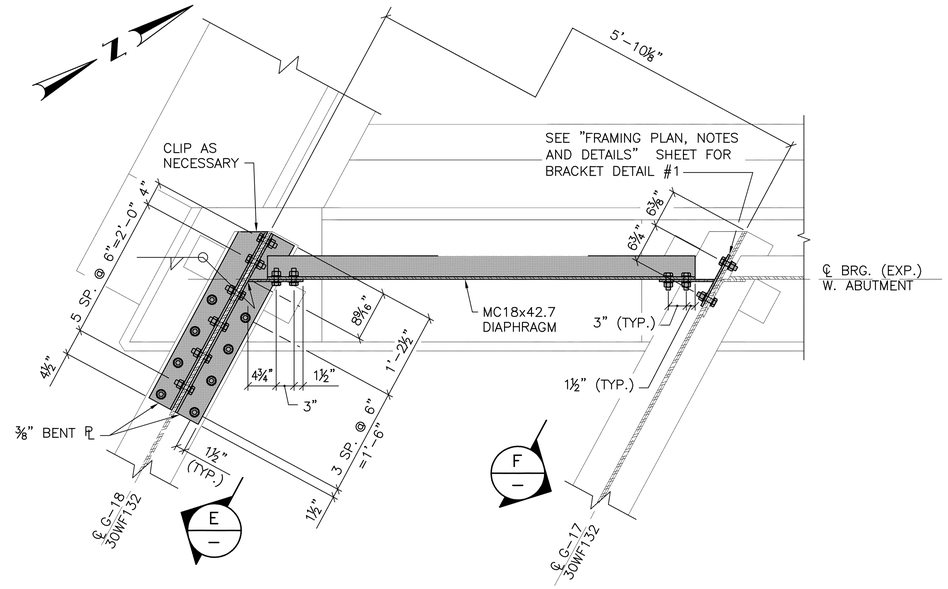

STEEL BEAM REPAIR AREA #1 (PROPOSED)
ABUTMENT – PLAN
SCALE:1"=1'-0"

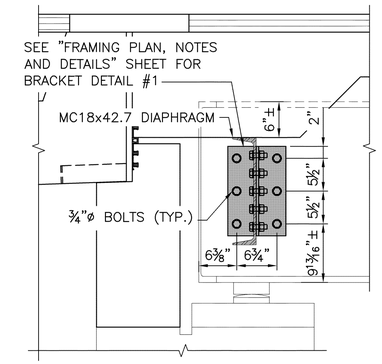

STEEL BEAM REPAIR AREA #1 (PROPOSED)
SECTION F/–
SCALE:1"=1'-0"

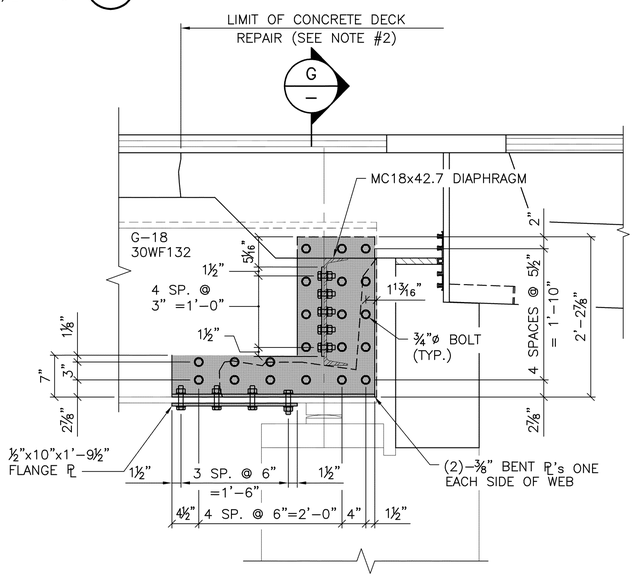

STEEL BEAM REPAIR AREA #1 (PROPOSED)
SECTION E/–
SCALE:1"=1'-0"

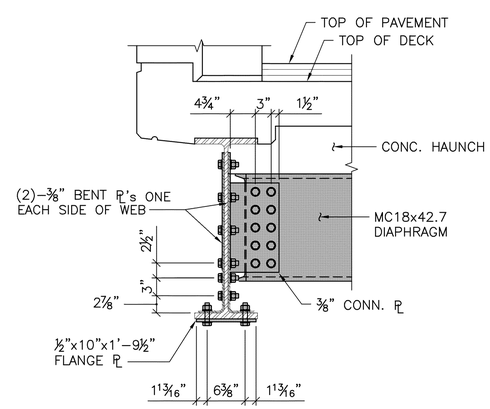

STEEL BEAM REPAIR AREA #1 (PROPOSED)
SECTION G/–
SCALE:1"=1'-0"

NOTES:
1. REFER TO "FRAMING PLAN, NOTES AND DETAILS" SHEET FOR "STEEL BEAM REPAIR NOTES".
2. STEEL REPAIR SHALL BE COORDINATED WITH CONCRETE DECK REPAIR.

LEGEND

DENOTES NEW STEEL COMPONENTS

COMMONWEALTH
ENGINEERS & CONSULTANTS, INC.
400 SMITH STREET
PROVIDENCE, RI 02908

REVISIONS		
NO.	DATE	BY

RHODE ISLAND
DEPARTMENT OF TRANSPORTATION

STATEWIDE BRIDGE REPAIRS
CONTRACT 4 - AMTRAK BRIDGES
LAFAYETTE R.R. BRIDGE No. 243
NORTH KINGSTOWN, RHODE ISLAND

STEEL BEAM REPAIRS
SHEET 1

CHECKED BY _____ DATE _____ SCALE AS SHOWN

0113R_V1_028_STELDETL002

FED. ROAD DIV. NO.	STATE	FEDERAL AID PROJECT NO.	FISCAL YEAR	SHEET NO.	TOTAL SHEETS
–	RI	–	2019	29	82

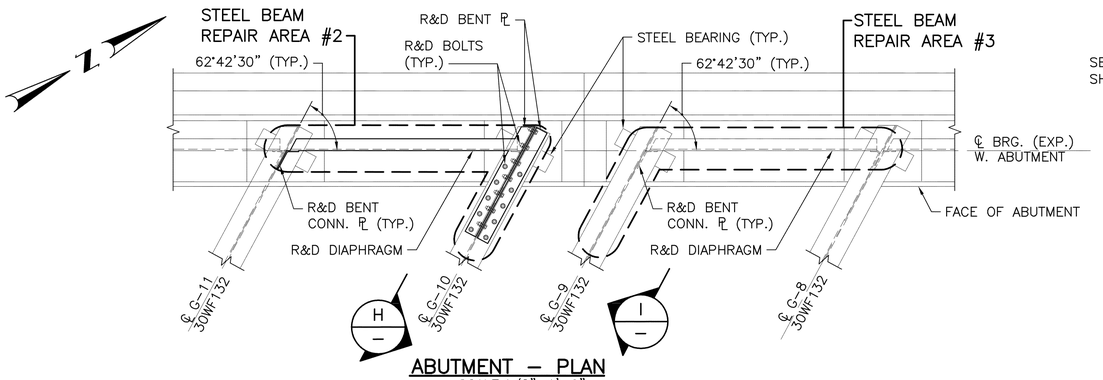

ABUTMENT – PLAN
SCALE:1/2"=1'-0"

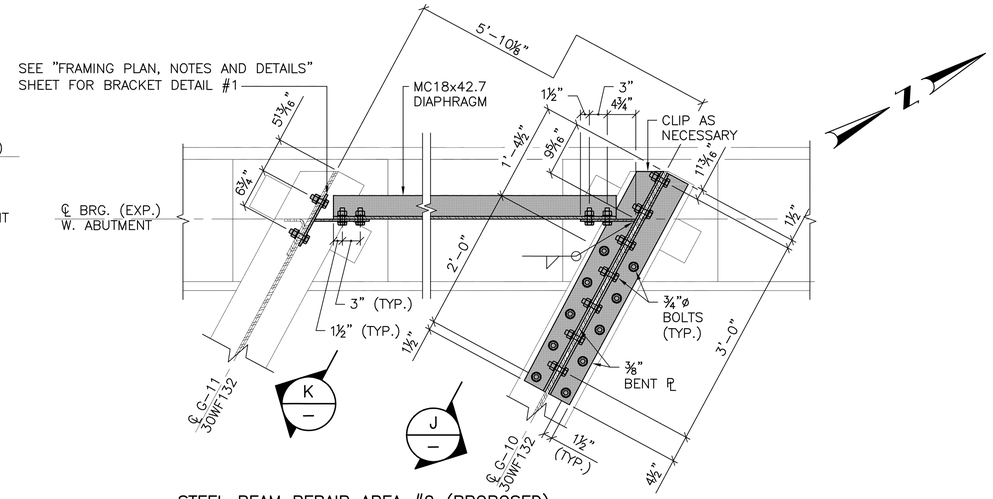

STEEL BEAM REPAIR AREA #2 (PROPOSED)
ABUTMENT – PLAN
SCALE:1"=1'-0"

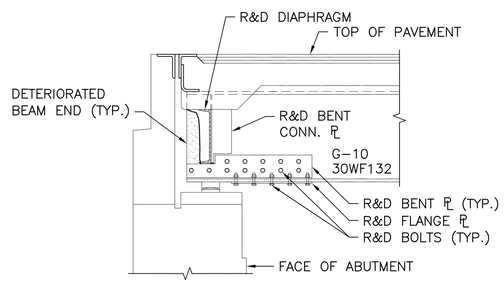

(EXISTING)
SECTION H
SCALE:1/2"=1'-0"

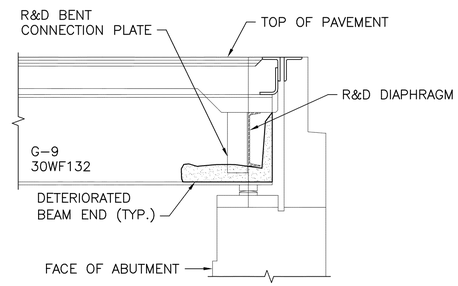

(EXISTING)
SECTION I
SCALE:1/2"=1'-0"

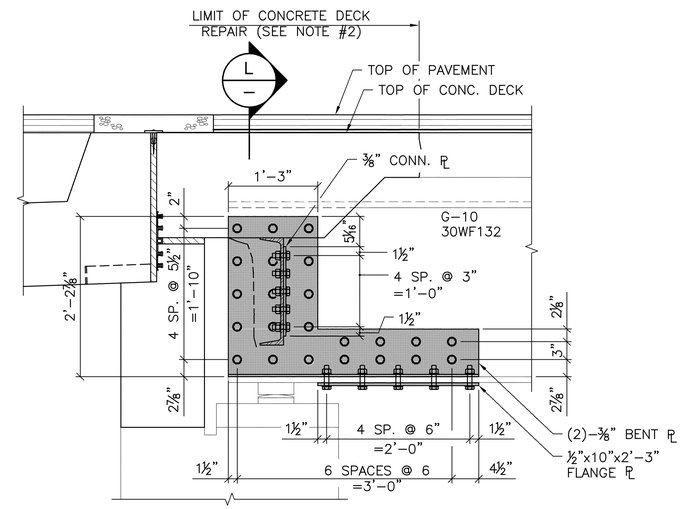

NOTE:
CONTRACTOR TO VERIFY EXISTING HOLE LOCATIONS
STEEL BEAM REPAIR AREA #2 (PROPOSED)
SECTION J
SCALE:1"=1'-0"

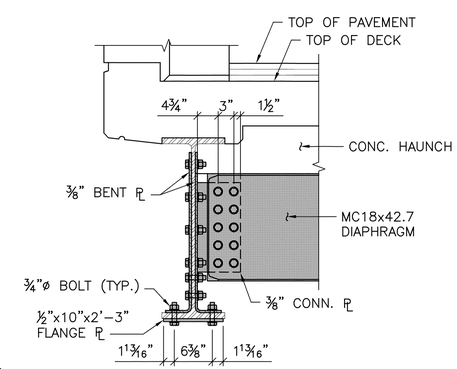

STEEL BEAM REPAIR AREA #2 (PROPOSED)
SECTION L
SCALE:1"=1'-0"

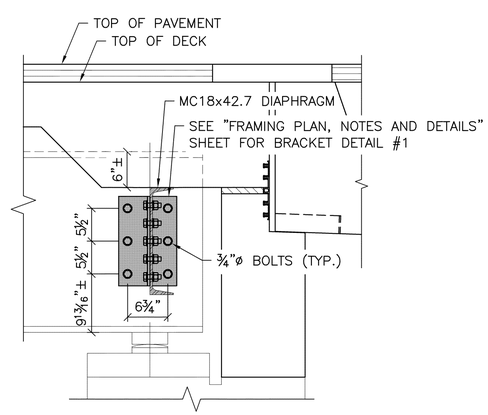

STEEL BEAM REPAIR AREA #2 (PROPOSED)
SECTION K
SCALE:1"=1'-0"

NOTES:
1. REFER TO "FRAMING PLAN, NOTES AND DETAILS" SHEET FOR "STEEL BEAM REPAIR NOTES".
2. STEEL REPAIR SHALL BE COORDINATED WITH CONCRETE DECK REPAIR.

LEGEND
DENOTES NEW STEEL COMPONENTS

COMMONWEALTH ENGINEERS & CONSULTANTS, INC.
400 SMITH STREET
PROVIDENCE, RI 02908

REVISIONS		
NO.	DATE	BY

RHODE ISLAND
DEPARTMENT OF TRANSPORTATION

STATEWIDE BRIDGE REPAIRS
CONTRACT 4 - AMTRAK BRIDGES
LAFAYETTE R.R. BRIDGE No. 243
NORTH KINGSTOWN, RHODE ISLAND

STEEL BEAM REPAIRS
SHEET 2

CHECKED BY _____ DATE _____ SCALE AS SHOWN

0113R_V1_029_STELDETL003

FED. ROAD DIV. NO.	STATE	FEDERAL AID PROJECT NO.	FISCAL YEAR	SHEET NO.	TOTAL SHEETS
–	RI	–	2019	30	82

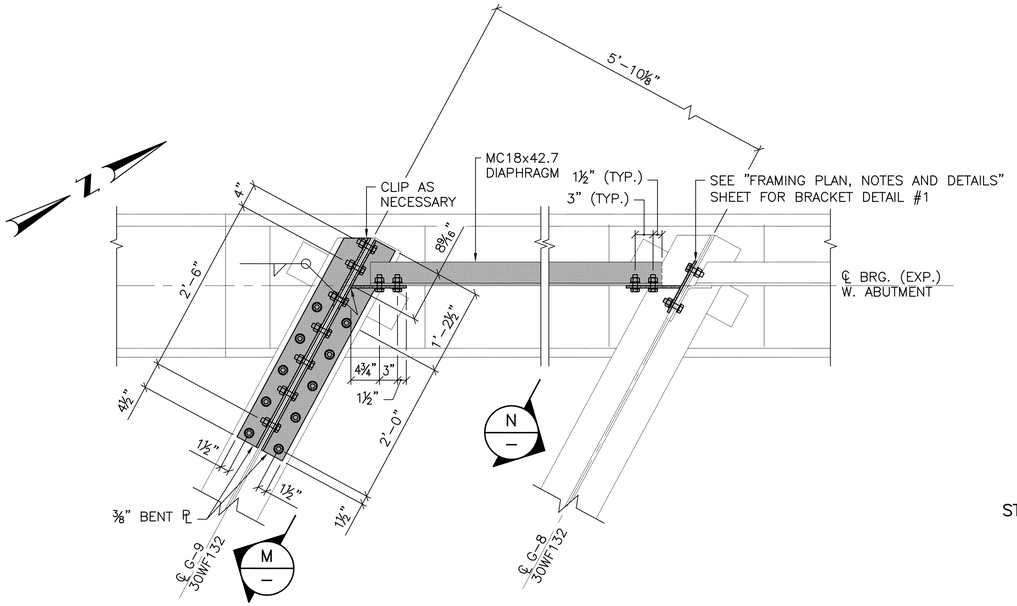

STEEL BEAM REPAIR AREA #3 (PROPOSED)

ABUTMENT – PLAN

SCALE:1"=1'-0"

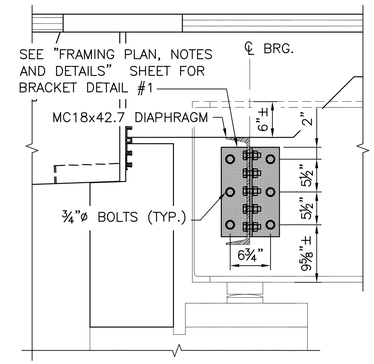

STEEL BEAM REPAIR AREA #3 (PROPOSED)

SECTION N

SCALE:1"=1'-0"

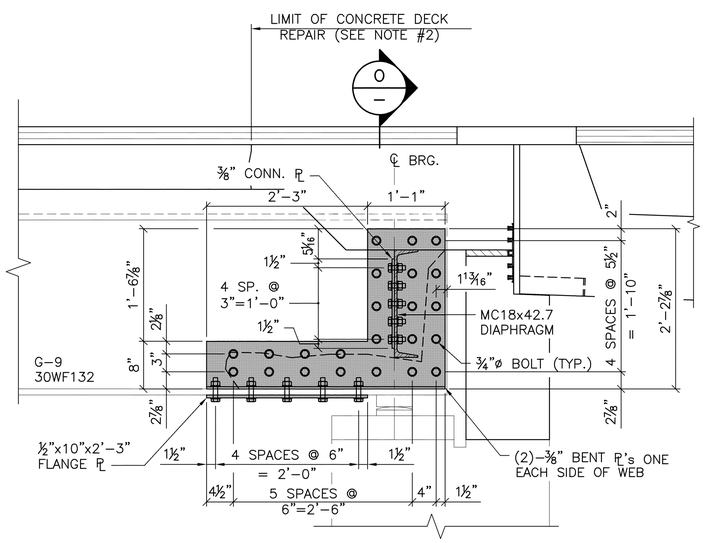

STEEL BEAM REPAIR AREA #3 (PROPOSED)

SECTION M

SCALE:1"=1'-0"

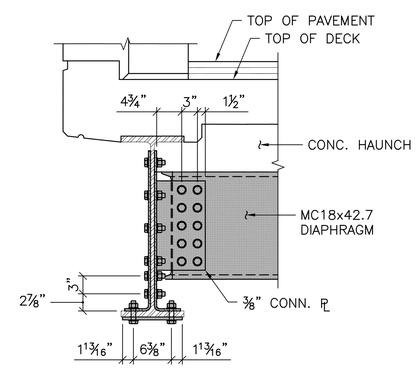

STEEL BEAM REPAIR AREA #3 (PROPOSED)

SECTION O

SCALE:1"=1'-0"

NOTES:

1. REFER TO "FRAMING PLAN, NOTES AND DETAILS" SHEET FOR "STEEL BEAM REPAIR NOTES".
2. STEEL REPAIR SHALL BE COORDINATED WITH CONCRETE DECK REPAIR.

LEGEND

DENOTES NEW STEEL COMPONENTS

COMMONWEALTH ENGINEERS & CONSULTANTS, INC.
400 SMITH STREET
PROVIDENCE, RI 02908

REVISIONS		
NO.	DATE	BY

RHODE ISLAND
DEPARTMENT OF TRANSPORTATION

STATEWIDE BRIDGE REPAIRS
CONTRACT 4 - AMTRAK BRIDGES
LAFAYETTE R.R. BRIDGE No. 243
NORTH KINGSTOWN, RHODE ISLAND

STEEL BEAM REPAIRS
SHEET 3

CHECKED BY _____ DATE _____ SCALE AS SHOWN

0113R_V1_030_STELDETL004

FED. ROAD DIV. NO.	STATE	FEDERAL AID PROJECT NO.	FISCAL YEAR	SHEET NO.	TOTAL SHEETS
–	RI	–	2019	31	82

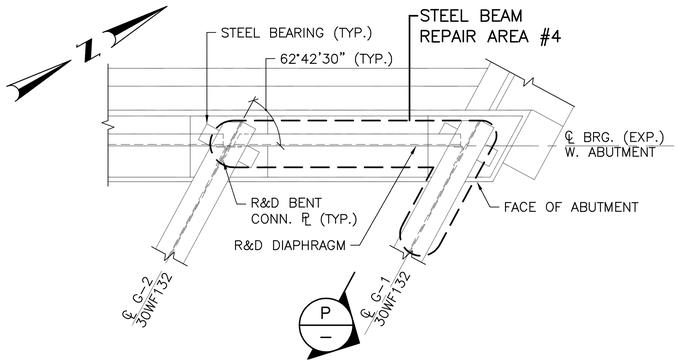

ABUTMENT – PLAN
SCALE:1/2"=1'-0"

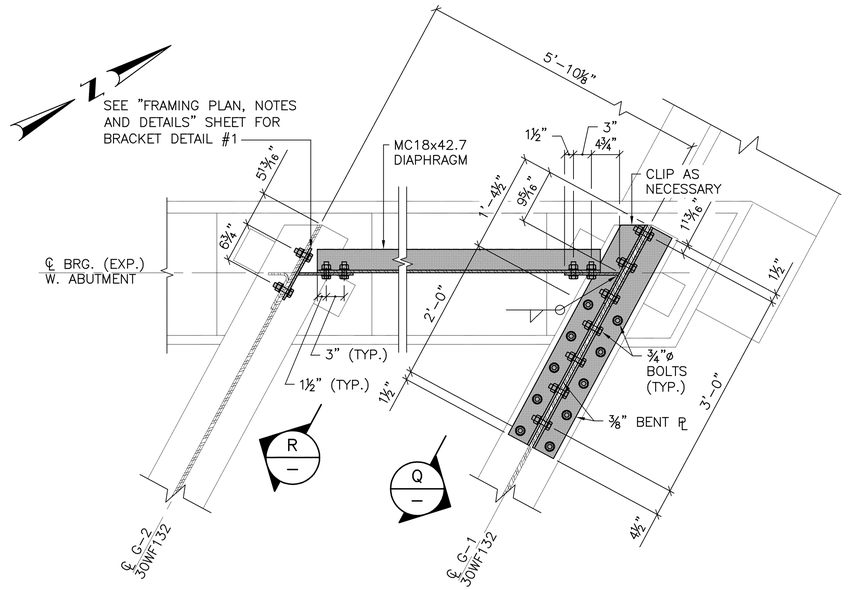

STEEL BEAM REPAIR AREA #4 (PROPOSED)
ABUTMENT – PLAN
SCALE:1"=1'-0"

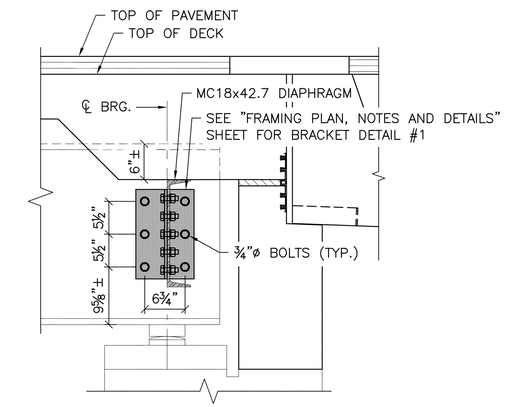

STEEL BEAM REPAIR AREA #4 (PROPOSED)
SECTION R –
SCALE:1"=1'-0"

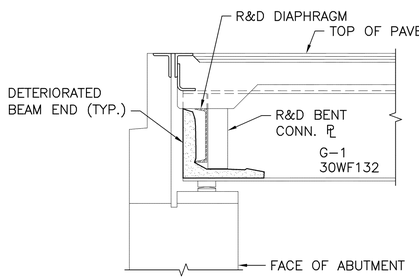

(EXISTING)
SECTION P –
SCALE:1/2"=1'-0"

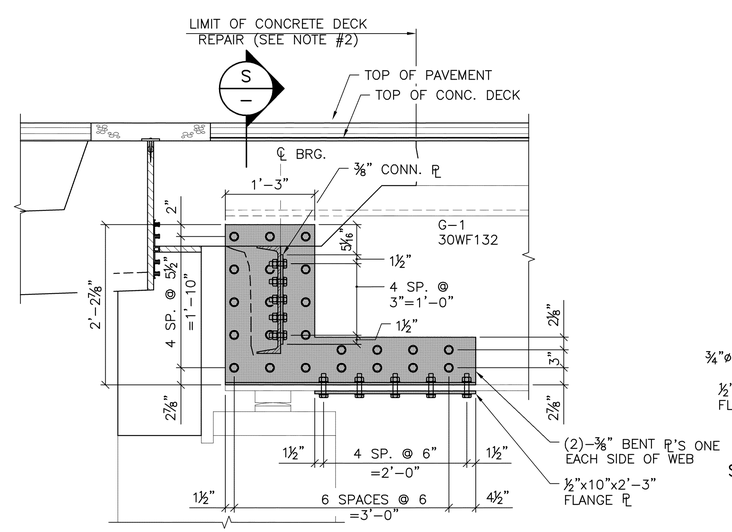

STEEL BEAM REPAIR AREA #4 (PROPOSED)
SECTION Q –
SCALE:1"=1'-0"

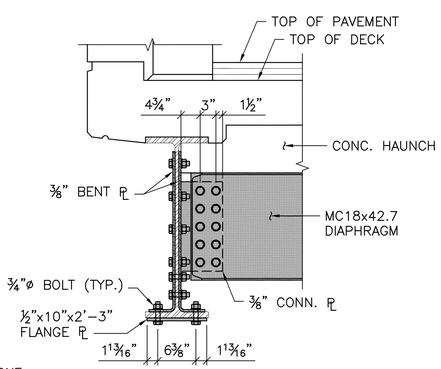

STEEL BEAM REPAIR AREA #4 (PROPOSED)
SECTION S –
SCALE:1"=1'-0"

LEGEND

DENOTES NEW STEEL COMPONENTS

NOTES:
1. REFER TO "FRAMING PLAN, NOTES AND DETAILS" SHEET FOR "STEEL BEAM REPAIR NOTES".
2. STEEL REPAIR SHALL BE COORDINATED WITH CONCRETE DECK REPAIR.

REVISIONS		
NO.	DATE	BY

RHODE ISLAND
DEPARTMENT OF TRANSPORTATION

STATEWIDE BRIDGE REPAIRS
CONTRACT 4 - AMTRAK BRIDGES
LAFAYETTE R.R. BRIDGE No. 243
NORTH KINGSTOWN, RHODE ISLAND

STEEL BEAM REPAIRS
SHEET 4

COMMONWEALTH ENGINEERS & CONSULTANTS, INC.
400 SMITH STREET
PROVIDENCE, RI 02908

CHECKED BY _____ DATE _____ SCALE AS SHOWN

0113R_V1_031_STELDETL005

FED. ROAD DIV. NO.	STATE	FEDERAL AID PROJECT NO.	FISCAL YEAR	SHEET NO.	TOTAL SHEETS
–	RI	–	2019	32	82

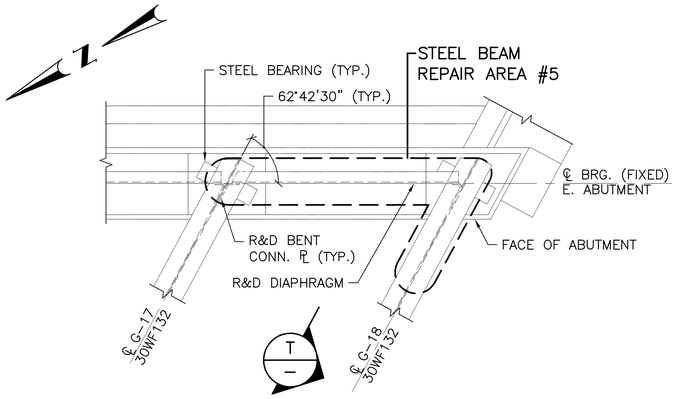

ABUTMENT – PLAN
SCALE:1/2"=1'-0"

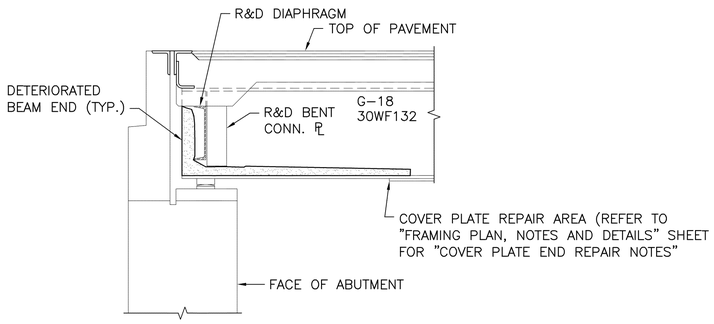

(EXISTING)
SECTION T/–
SCALE:1/2"=1'-0"

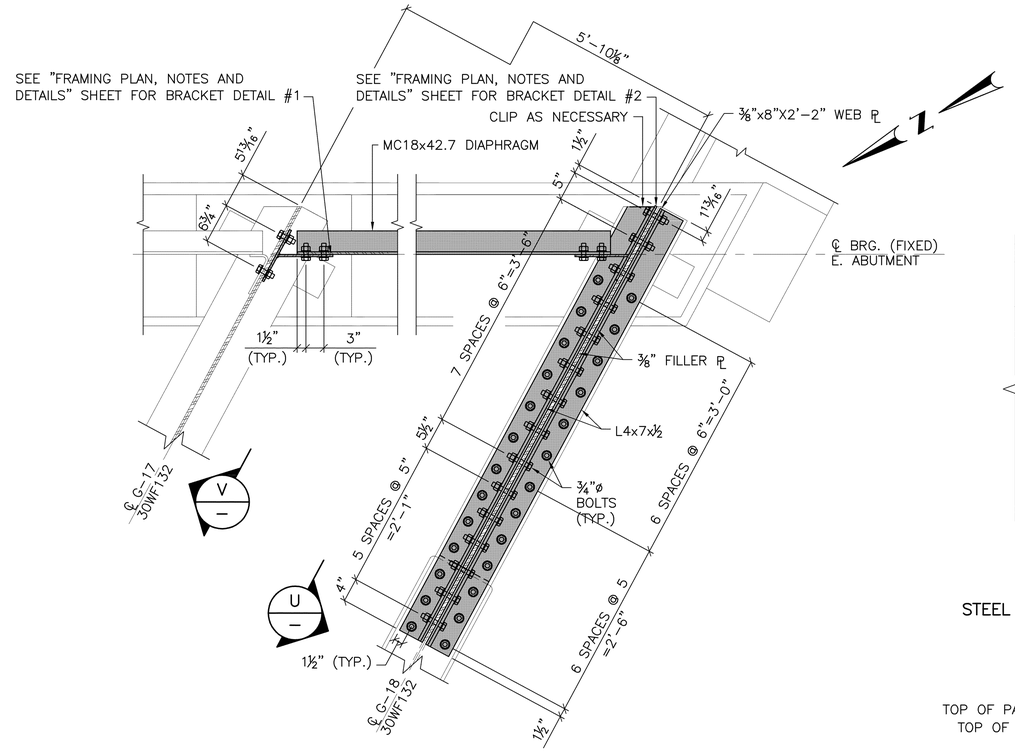

STEEL BEAM REPAIR AREA #5 (PROPOSED)
ABUTMENT – PLAN
SCALE:1"=1'-0"

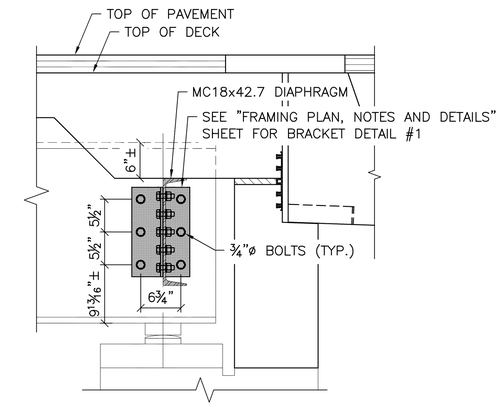

STEEL BEAM REPAIR AREA #5 (PROPOSED)
SECTION V/–
SCALE:1"=1'-0"

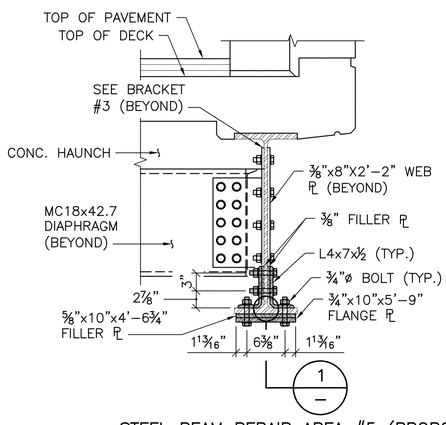

STEEL BEAM REPAIR AREA #5 (PROPOSED)
SECTION X/–
SCALE:1"=1'-0"

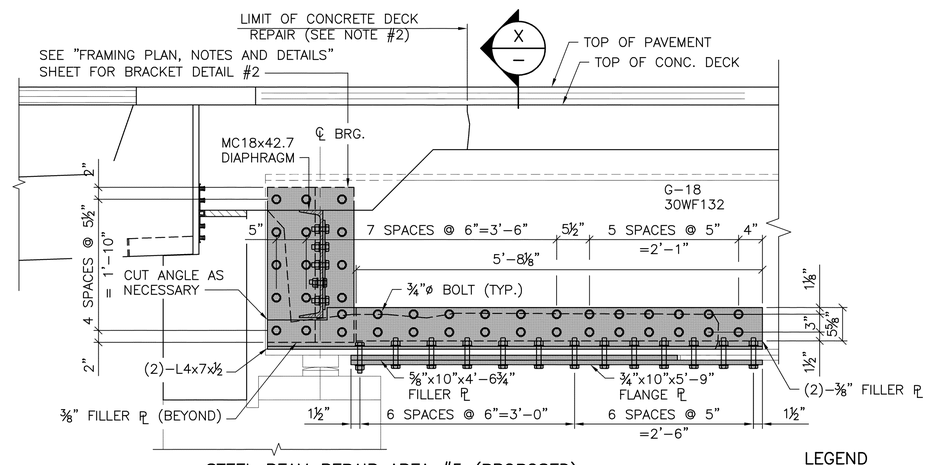

STEEL BEAM REPAIR AREA #5 (PROPOSED)
SECTION U/–
SCALE:1"=1'-0"

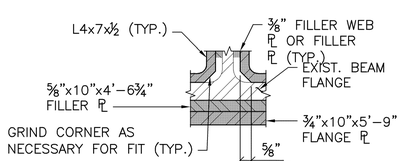

DETAIL 1/–
SCALE:3"=1'-0"

LEGEND

DENOTES NEW STEEL COMPONENTS

NOTES:
1. REFER TO "FRAMING PLAN, NOTES AND DETAILS" SHEET FOR "STEEL BEAM REPAIR NOTES".
2. STEEL REPAIR SHALL BE COORDINATED WITH CONCRETE DECK REPAIR.

REVISIONS		
NO.	DATE	BY

RHODE ISLAND
DEPARTMENT OF TRANSPORTATION

STATEWIDE BRIDGE REPAIRS
CONTRACT 4 - AMTRAK BRIDGES
LAFAYETTE R.R. BRIDGE No. 243
NORTH KINGSTOWN, RHODE ISLAND

STEEL BEAM REPAIRS
SHEET 5

COMMONWEALTH ENGINEERS & CONSULTANTS, INC.
400 SMITH STREET
PROVIDENCE, RI 02908

CHECKED BY _____ DATE _____ SCALE AS SHOWN

0113R_V1_032_STELDETL006

FED. ROAD DIV. NO.	STATE	FEDERAL AID PROJECT NO.	FISCAL YEAR	SHEET NO.	TOTAL SHEETS
–	RI	–	2019	71	82

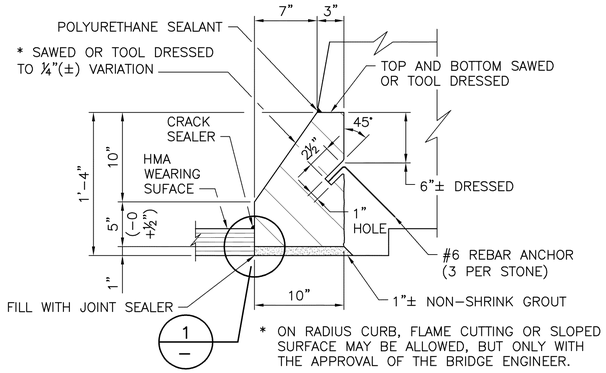

10"x15" SLOPE FACE GRANITE CURB

SCALE: 1½"=1'-0"

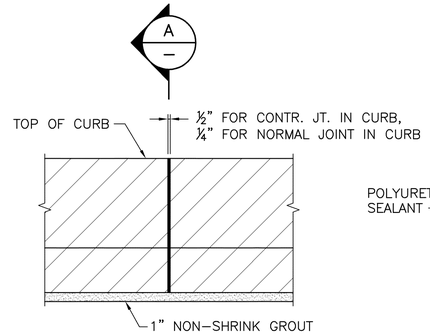

ELEVATION AT FACE OF CURB

SCALE: 1 1/2"=1'-0"

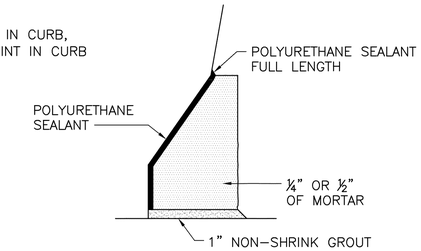

SECTION A –

SCALE: 1 1/2"=1'-0"

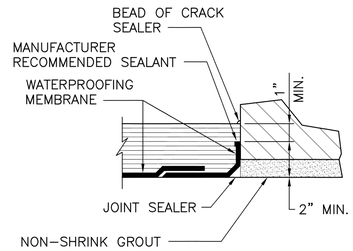

DETAIL 1 –

SCALE:3"=1'-0"

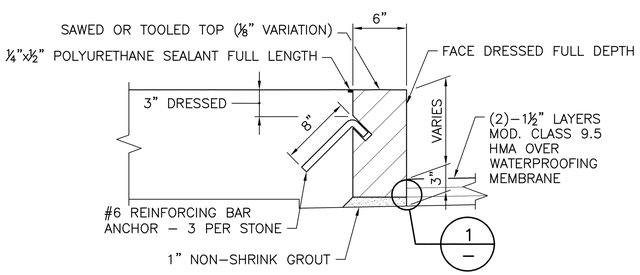

GRANITE CURB DETAIL

SCALE:1 1/2"=1'-0"

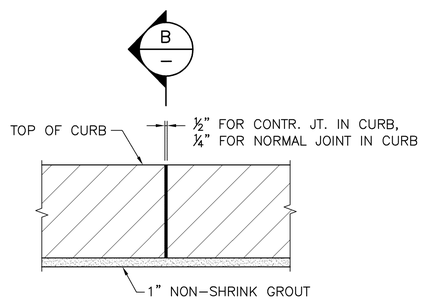

ELEVATION AT FACE OF CURB

SCALE: 1 1/2"=1'-0"

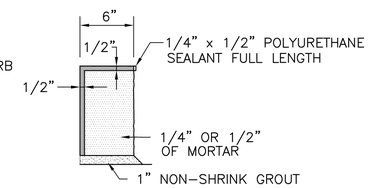

SECTION B –

SCALE: 1 1/2"=1'-0"

GRANITE CURB NOTES:

1. FOR CUTTING TOLERANCES ON GRANITE CURB SEE R.I. STANDARD SPECIFICATION M-09-05.
2. STRAIGHT CURB SHALL BE FURNISHED IN LENGTHS OF NOT LESS THAN 6 FEET OR GREATER THAN 10 FEET. (5 FOOT LENGTHS MAY BE ALLOWED WITH THE APPROVAL OF THE BRIDGE ENGINEER).
3. CURB WHICH IS SET ON A RADIUS BETWEEN 160 FEET AND 300 FEET MAY BE FURNISHED STRAIGHT IN LENGTHS NOT TO EXCEED 6 FEET.
4. CURB TO BE SET ON A RADIUS OF 160 FEET OF LESS SHALL BE CUT TO THE CURVE RADIUS.

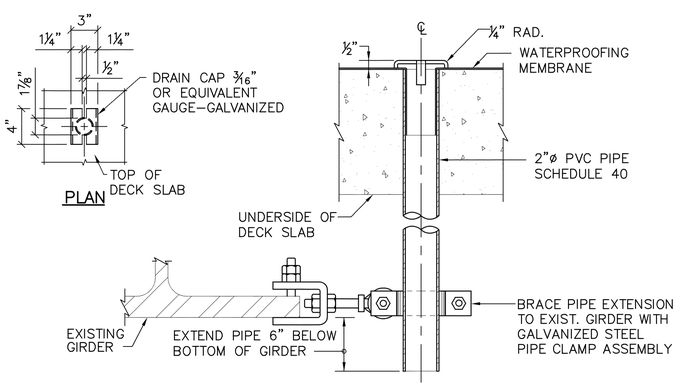

SUBPAVEMENT DRAIN

NOT TO SCALE

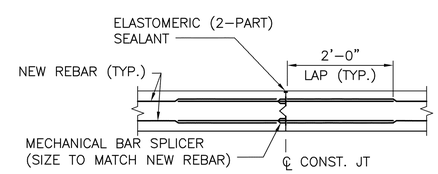

CONSTRUCTION JOINT IN DECK WITH GALVANIZED MECHANICAL BAR SPLICER DETAIL

SCALE:3/4"=1'-0"

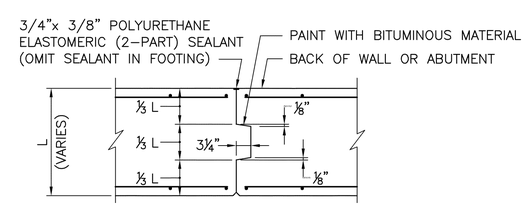

CONTRACTION JOINT IN BACKWALL, APPROACH SLAB & APPROACH SLAB HAUNCH DETAIL

SCALE: 3/4"=1'-0"

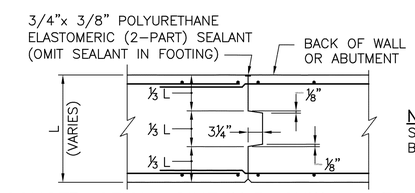

CONSTRUCTION JOINT IN BACKWALL DETAIL

SCALE: 3/4"=1'-0"

NOTE:

SUBSTITUTE MECHANICAL BAR SPLICERS AS REQUIRED.

REVISIONS		
NO.	DATE	BY

COMMONWEALTH ENGINEERS & CONSULTANTS, INC.
400 SMITH STREET
PROVIDENCE, RI 02908

RHODE ISLAND
DEPARTMENT OF TRANSPORTATION

STATEWIDE BRIDGE REPAIRS
CONTRACT 4 - AMTRAK BRIDGES

RHODE ISLAND

MISCELLANEOUS DETAILS
SHEET 1

CHECKED BY _____ DATE _____ SCALE AS SHOWN

0113R_V1_071_MISCDETL001

FED. ROAD DIV. NO.	STATE	FEDERAL AID PROJECT NO.	FISCAL YEAR	SHEET NO.	TOTAL SHEETS
–	RI	–	2019	72	82

PROTECTIVE SHIELDING NOTES:

1. THE USE OF PROTECTIVE SHIELDING IS MANDATORY. THE CONTRACTOR SHALL SUBMIT PROPOSED PROTECTIVE SHIELDING SYSTEM TO THE ENGINEER FOR REVIEW AND APPROVAL IN ACCORDANCE WITH SECTION 803.0500 OF THE STANDARD SPECIFICATIONS.
2. PROTECTIVE SHIELDING PAY LIMITS FOR PARTIAL DECK REBUILDS, DECK JOINT REBUILDS AND PARAPET & SAFETY WALK RECONSTRUCTION SHALL EXTEND TO THE LIMITS SHOWN, INCLUDING HORIZONTAL AND VERTICAL EXTENSIONS AT OVERHANGS AS DETAILED ON THIS SHEET.
3. ON STRUCTURAL STEEL SUPERSTRUCTURES, UPON REMOVAL OF THE TEMPORARY PROTECTIVE SHIELDING THE CONTRACTOR SHALL RESTORE THE BEAM WEB BY PERFORMING THE FOLLOWING:

   A.) INSTALL A PROPERLY SIZED A 325 BOLT WITH NUT AND WASHERS IN EACH HOLE AND TIGHTEN IN ACCORDANCE WITH RIDOT STANDARD SPECIFICATIONS.

   B.) PAINT BOLT AND TOUCH UP BEAM PAINT DAMAGED BY THE CONTRACTOR'S OPERATIONS.
4. THE COST TO RESTORE THE BEAM WEB SHALL BE INCLUDED FOR PAYMENT UNDER ITEM CODE 803.0500.
5. FOR LONGITUDINAL PAY LIMITS REFER TO INDIVIDUAL BRIDGE DRAWINGS.
6. THE PROTECTIVE SHIELDING SHOWN IN THESE DETAILS ARE SCHEMATIC ONLY. THE CONTRACTOR SHALL BE RESPONSIBLE FOR THE DESIGN OF THE SYSTEMS.
7. REFER TO CS PAGES FOR AMTRAK SHIELDING REQUIREMENTS.
8. UTILITY SHIELDING WILL NOT BE MEASURED AND PAID FOR SEPARATELY. PAYMENT WILL BE INCLUDED WITHIN THE CONTRACT UNIT BID PRICE FOR ITEM CODE 803.0500.
9. VERTICAL PAY LIMIT SHALL EXTEND TO EITHER 2 FEET ABOVE THE TOP OF BRIDGE PARAPET OR TO 4 FEET ABOVE TOP OF THE BRIDGE SAFETY WALK, SIDEWALK, OR DECK, WHICHEVER IS HIGHER.

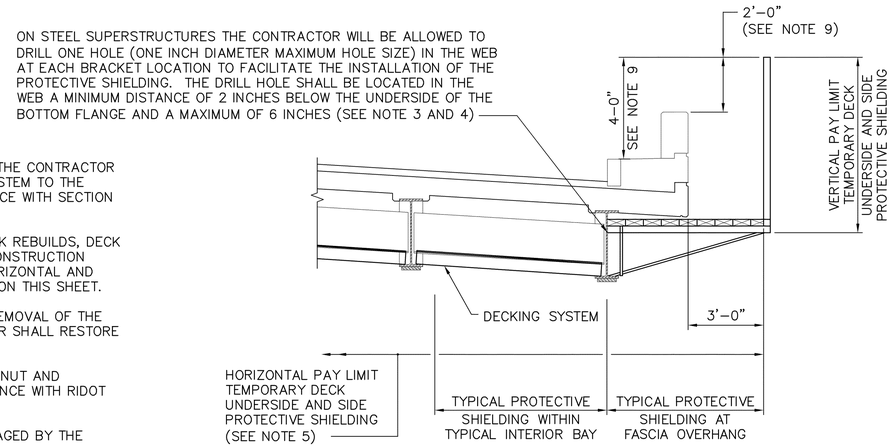

TEMPORARY DECK UNDERSIDE & SIDE PROTECTIVE SHIELDING DETAIL

SCALE:3/8"=1'–0"

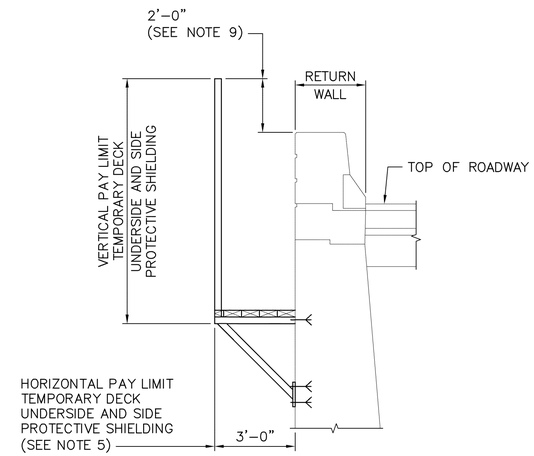

TEMPORARY RETURN WALL SIDE PROTECTIVE SHIELDING DETAIL

SCALE:3/8"=1'–0"

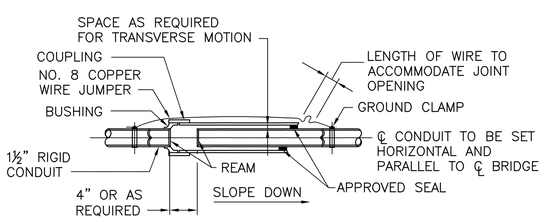

ELECTRICAL CONDUIT EXPANSION COUPLING FOR BRIDGE LIGHTING

NOT TO SCALE

ALL EXPANSION FITTINGS TO BE FACTORY MANUFACTURED, AND AT THE APPROVAL OF THE ENGINEER

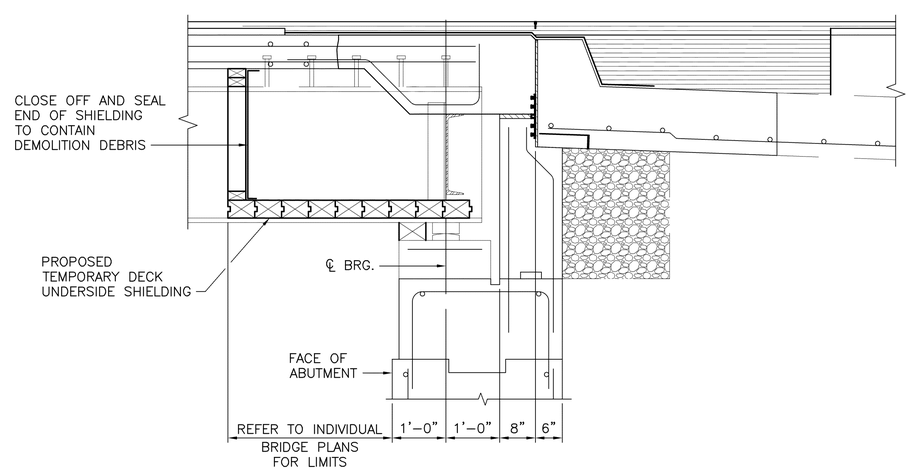

TYPICAL SECTION AT ABUTMENTS FOR BACKWALL, DECK EDGE AND APPROACH SLAB REBUILD

SCALE:3/4"=1'–0"

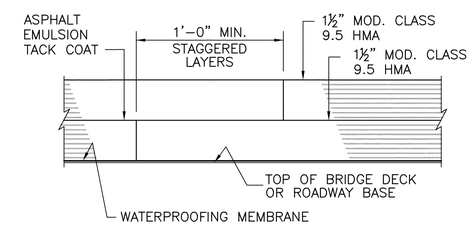

LONGITUDINAL PAVEMENT JOINT DETAIL

NOT TO SCALE

REVISIONS		
NO.	DATE	BY

RHODE ISLAND
DEPARTMENT OF TRANSPORTATION

STATEWIDE BRIDGE REPAIRS
CONTRACT 4 - AMTRAK BRIDGES

RHODE ISLAND

MISCELLANEOUS DETAILS
SHEET 2

COMMONWEALTH ENGINEERS & CONSULTANTS, INC.
400 SMITH STREET
PROVIDENCE, RI 02908

CHECKED BY _____ DATE _____ SCALE AS SHOWN

0113R_V1_072_MISCDETL002

FED. ROAD DIV. NO.	STATE	FEDERAL AID PROJECT NO.	FISCAL YEAR	SHEET NO.	TOTAL SHEETS
–	RI	–	2019	73	82

R-1

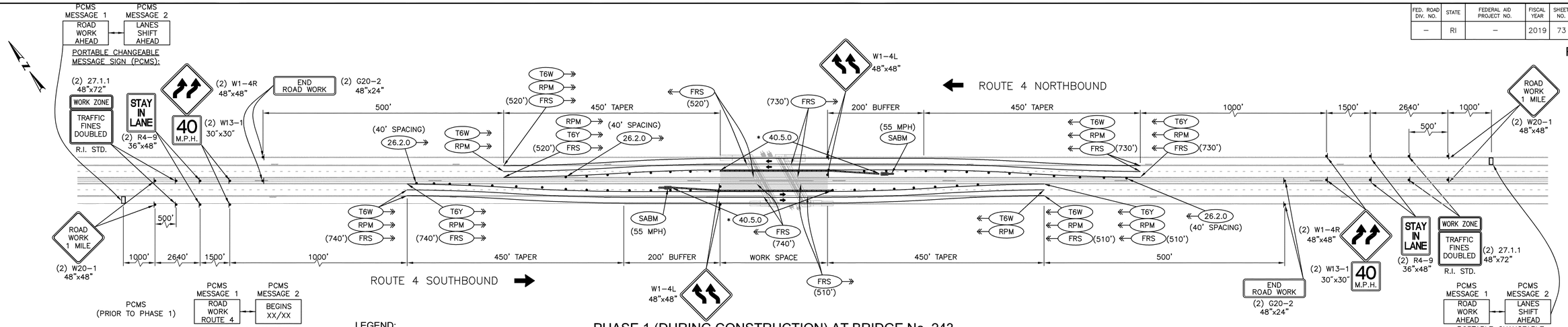

INSTALL PORTABLE CHANGEABLE MESSAGE SIGNS (PCMS) ON ROUTE 4 EAST AND WEST OF BRIDGE No. 243 TO INDICATE CONSTRUCTION AND NEW PATTERN. PCMS MESSAGE SHALL BE CHANGED WHEN DIRECTED BY THE ENGINEER.

PHASE 1 (DURING CONSTRUCTION) AT BRIDGE No. 243

SCALE: 1"=100'

LEGEND:

- DRUM BARRICADES STANDARD 26.2.0
- UNANCHORED PRECAST CONCRETE BARRIER FOR TEMPORARY TRAFFIC CONTROL STANDARD 40.5.0
- APPROVED TEMPORARY TRAFFIC SIGN SUPPORT
- DIRECTION OF TRAFFIC FLOW
- ADVANCE WARNING ARROW PANEL
- POLICE CRUISER WITH FLASHING LIGHT BAR
- WORK SPACE IN THIS PHASE
- PORTABLE CHANGEABLE MESSAGE SIGN (PCMS)
- T6Y — 6" YELLOW FAST DRYING WATERBORNE PAVEMENT MARKING PAINT
- T6W — 6" WHITE FAST DRYING WATERBORNE PAVEMENT MARKING PAINT
- T12W — 12" WHITE FAST DRYING WATERBORNE PAVEMENT MARKING PAINT
- SABM — SHOCK ABSORBING BARRIER MODULES
- RPM — REMOVE PAVEMENT MARKINGS
- FRS — MICRO MILLING AND FILL RUMBLE STRIP WITH CLASS 12.5 HOT MIX ASPHALT
- MMP — PARTIAL DEPTH SAWCUT (1½") AND REMOVAL OF PAVEMENT BY MICRO MILLING. APPLY ASPHALT EMULSION TACK COAT AND 1½" FRICTION COURSE, CUT RUMBLE STRIP LEFT AND RIGHT SHOULDERS (NOT ON BRIDGE).

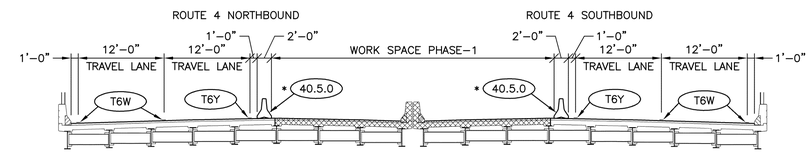

PHASE 1 (DURING CONSTRUCTION) AT BRIDGE No. 243

SCALE: 1"=10'

NOTE:
THE CONTRACTOR SHALL PROVIDE SEDIMENTATION CONTROL FOR CATCH BASINS ALONG ROUTE 4 AS FOLLOWS: NORTHBOUND – 6 CB'S EAST OF BRIDGE AND 4 CB'S WEST OF BRIDGE. SOUTHBOUND – 6 CB'S EAST OF BRIDGE AND 2 CB'S WEST OF BRIDGE. THE CATCH BASINS SHALL BE CLEANED AND THE CONNECTING PIPES SHALL BE CLEANED AND FLUSHED.

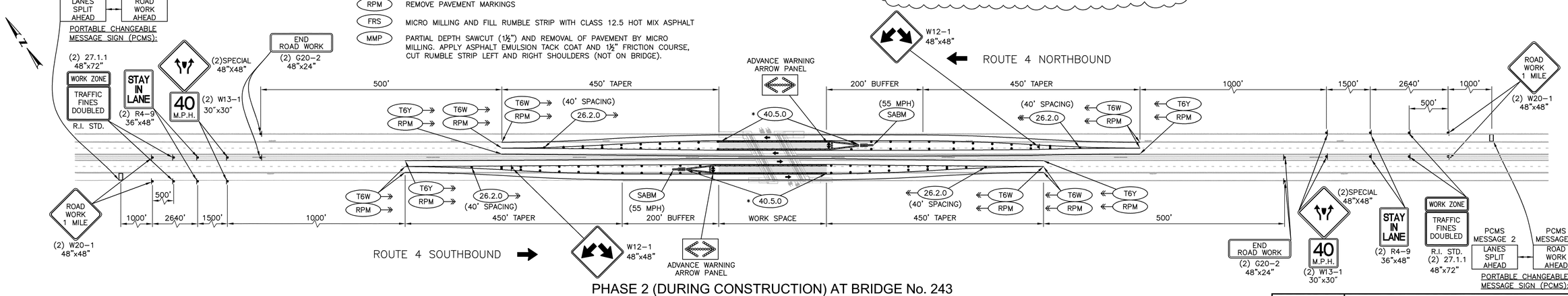

PHASE 2 (DURING CONSTRUCTION) AT BRIDGE No. 243

SCALE: 1"=100'

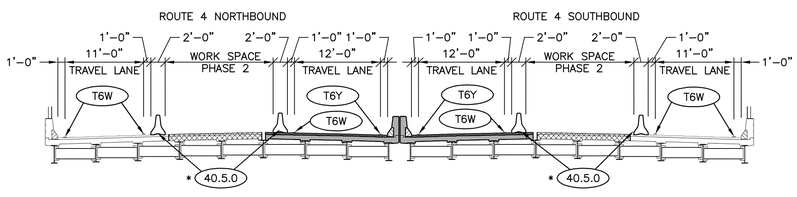

PHASE 2 (DURING CONSTRUCTION) AT BRIDGE No. 243

SCALE: 1"=10'

NOTE:
* TEMPORARY ANCHORED BARRIER IS REQUIRED AT LOCATIONS OF BRIDGE DECK EDGE REMOVAL AND SHALL EXTEND A MINIMUM OF 10 FEET ON EITHER SIDE OF THE CENTERLINE OF EACH BRIDGE JOINT.

ADDENDUM No. 1

COMMONWEALTH ENGINEERS & CONSULTANTS, INC.
400 SMITH STREET
PROVIDENCE, RI 02908

REVISIONS		
NO.	DATE	BY
1	1/22/18	NS

RHODE ISLAND
DEPARTMENT OF TRANSPORTATION

STATEWIDE BRIDGE REPAIRS
CONTRACT 4 - AMTRAK BRIDGES
LAFAYETTE R.R. BRIDGE No. 243
NORTH KINGSTOWN, RHODE ISLAND

MAINTENANCE AND PROTECTION OF TRAFFIC PLAN No. 1

CHECKED BY _____ DATE _____ SCALE AS SHOWN

0113R_V1_073_TCONTROL001_ADD01

P:\10200\10027.00 On-Call Bridge Design\10027.13 Ten Bridges_Drawings\Transportation_Curvet_Drawings\CONTRACT 4\Bridge 243\011R_V1_073_TCONTROL001_ADD01.dwg, 1/23/2018 9:07:20 AM, RMM

FED. ROAD DIV. NO.	STATE	FEDERAL AID PROJECT NO.	FISCAL YEAR	SHEET NO.	TOTAL SHEETS
–	RI	–	2019	74	82

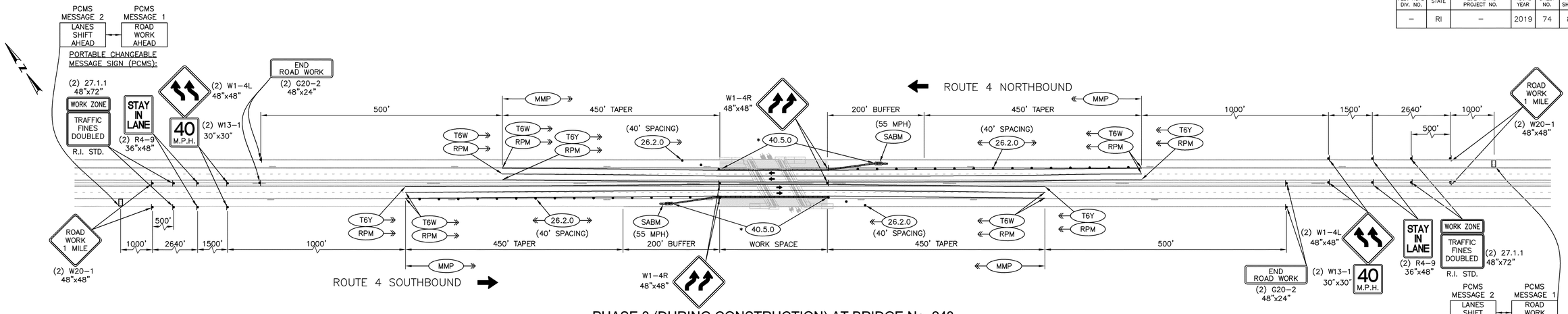

PHASE 3 (DURING CONSTRUCTION) AT BRIDGE No. 243

SCALE: 1"=100'

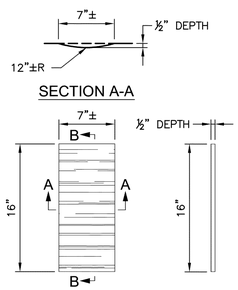

CUT RUMBLE STRIP DETAIL

NOT TO SCALE

NOTES:

1. RUMBLE STRIP ALIGNMENT OFFSET MAY BE ADJUSTED TO ACCOMMODATE VARIATIONS IN THE EDGE LINE AS WELL AS TO AVOID EXISTING LONGITUDINAL CONSTRUCTION JOINTS.
2. THE ½" DEPTH SHALL GENERALLY APPLY FOR THE ENTIRE 16" LENGTH. SOME VARIATION TO SUIT SHOULDER SLOPE BREAKS MAY BE NECESSARY.

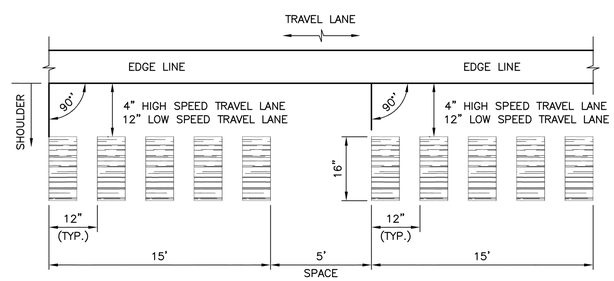

SPACING OF RUMBLE STRIP

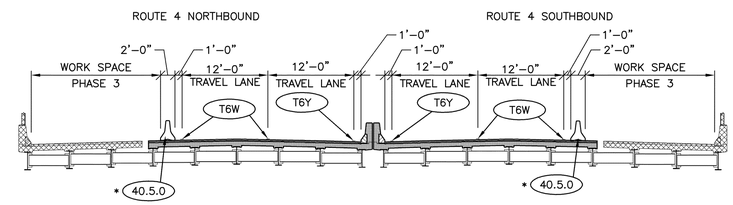

PHASE 3 (DURING CONSTRUCTION) AT BRIDGE No. 243

SCALE: 1"=10'

NOTE:

* TEMPORARY ANCHORED BARRIER IS REQUIRED AT LOCATIONS OF BRIDGE DECK EDGE REMOVAL AND SHALL EXTEND A MINIMUM OF 10 FEET ON EITHER SIDE OF THE CENTERLINE OF EACH BRIDGE JOINT.

NOTE:

AT THE COMPLETION OF CONSTRUCTION PHASE 3, THE TEMPORARY PAVEMENT MARKINGS SHALL BE REMOVED AND THE ORIGINAL PRE–CONSTRUCTION PAVEMENT MARKINGS SHALL BE RESTORED WITH EPOXY RESIN PAVEMENT MARKINGS.

LEGEND:

- • DRUM BARRICADES STANDARD 26.2.0
- UNANCHORED PRECAST CONCRETE BARRIER FOR TEMPORARY TRAFFIC CONTROL STANDARD 40.5.0
- APPROVED TEMPORARY TRAFFIC SIGN SUPPORT
- DIRECTION OF TRAFFIC FLOW
- ADVANCE WARNING ARROW PANEL
- POLICE CRUISER WITH FLASHING LIGHT BAR
- WORK SPACE IN THIS PHASE
- PORTABLE CHANGEABLE MESSAGE SIGN (PCMS)
- T6Y — 6" YELLOW FAST DRYING WATERBORNE PAVEMENT MARKING PAINT
- T6W — 6" WHITE FAST DRYING WATERBORNE PAVEMENT MARKING PAINT
- T12W — 12" WHITE FAST DRYING WATERBORNE PAVEMENT MARKING PAINT
- SABM — SHOCK ABSORBING BARRIER MODULES
- RPM — REMOVE PAVEMENT MARKINGS
- FRS — FILL RUMBLE STRIP WITH TEMPORARY PATCHING MATERIAL CODE 410.9901
- MMP — PARTIAL DEPTH SAWCUT (1½") AND REMOVAL OF PAVEMENT BY MICRO MILLING. APPLY ASPHALT EMULSION TACK COAT AND 1½" FRICTION COURSE, CUT RUMBLE STRIP LEFT AND RIGHT SHOULDERS (NOT ON BRIDGE).

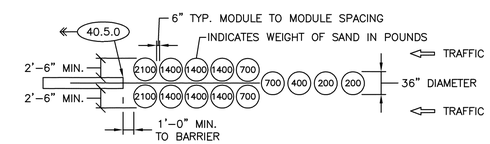

SABM

TYPICAL DETAIL
SHOCK ABSORBING BARRIER MODULES
55 MPH DESIGN VELOCITY

NOT TO SCALE

REVISIONS		
NO.	DATE	BY

COMMONWEALTH ENGINEERS & CONSULTANTS, INC.
400 SMITH STREET
PROVIDENCE, RI 02908

RHODE ISLAND
DEPARTMENT OF TRANSPORTATION

STATEWIDE BRIDGE REPAIRS
CONTRACT 4 - AMTRAK BRIDGES
LAFAYETTE R.R. BRIDGE No. 243
NORTH KINGSTOWN, RHODE ISLAND

MAINTENANCE AND PROTECTION OF TRAFFIC PLAN No. 2

CHECKED BY _____ DATE _____ SCALE 1:100

0113R_V1_074_TCONTROL002

FED. ROAD DIV. NO.	STATE	FEDERAL AID PROJECT NO.	FISCAL YEAR	SHEET NO.	TOTAL SHEETS
–	RI	–	2019	82	82

NOTES:

1. ALL TEMPORARY TRAFFIC CONTROL SET–UPS AND DEVICES AND THEIR INSTALLATION, MAINTENANCE, AND REMOVAL SHALL CONFORM TO THE LATEST EDITION OF THE "MANUAL ON UNIFORM TRAFFIC CONTROL DEVICES" (MUTCD) WITH ALL REVISIONS, AND THE LATEST EDITION OF THE "RIDOT STANDARD SPECIFICATIONS FOR ROAD AND BRIDGE CONSTRUCTION" WITH ALL REVISIONS.
2. ALL TEMPORARY TRAFFIC CONTROL DEVICES SHALL BE IN PLACE PRIOR TO THE START OF WORK.
3. ALL TEMPORARY TRAFFIC CONTROL DEVICES SHALL BE REMOVED AS SOON AS PRACTICAL WHEN THEY ARE NO LONGER NEEDED. WHEN WORK IS SUSPENDED FOR SHORT PERIODS OF TIME, TEMPORARY TRAFFIC CONTROL DEVICES THAT ARE NO LONGER APPROPRIATE SHALL BE REMOVED OR COVERED.
4. DISTANCES ARE A GUIDE AND MAY BE ADJUSTED IN THE FIELD BY THE ENGINEER.
5. MAXIMUM SPACING OF CHANNELIZATION DEVICES IN A TAPER IS EQUAL IN FEET TO THE SPEED LIMIT IN MPH. MAXIMUM SPACING OF CHANNELIZATION DEVICES IN A TANGENT SECTION IS EQUAL IN FEET TO TWO TIMES THE SPEED LIMIT IN MPH.
6. MINIMUM LANE WIDTH IS TO BE 11 FEET UNLESS OTHERWISE SHOWN. MINIMUM LANE WIDTH TO BE MEASURED FROM THE EDGE OF CHANNELIZATION DEVICES OR TEMPORARY BARRIER.
7. TEMPORARY TRAFFIC CONTROL SET–UP FOR A LEFT LANE CLOSURE SHALL BE SIMILAR TO THE SET–UP SHOWN, WITH APPROPRIATE CHANGES TO SIGNS AND OTHER DEVICES TO INDICATE THE LEFT LANE CLOSURE.
8. THE SIZES OF ALL DIAMOND SHAPED ADVANCE WARNING SIGNS SHALL BE 48" X 48".
9. THE DISTANCE BETWEEN THE SHADOW VEHICLE AND THE WORK SPACE SHOULD BE SELECTED BASED ON TRAFFIC AND SITE CONDITIONS AS WELL AS THE CHARACTERISTICS OF THE SHADOW VEHICLE/ATTENUATOR AND ITS MANUFACTURER'S RECOMMENDATIONS, BUT SHOULD BE NO GREATER THAN THE MINIMUM DISTANCE SUFFICIENT TO ENSURE THAT THE SHADOW VEHICLE WILL NOT ROLL INTO THE WORK SPACE WHEN HIT BY AN ERRANT VEHICLE.
10. WHERE A SIDE STREET OR RAMP INTERSECTS THE WORK ZONE, ADDITIONAL TEMPORARY TRAFFIC CONTROL DEVICES SHALL BE INSTALLED IN ACCORDANCE WITH PART 6 OF THE MUTCD.

TAPER AND BUFFER LENGTHS

Speed Limit	Taper Length* Feet (L)	Buffer Space** Feet
40 MPH	320	180
45 MPH	540	220
50 MPH	600	280
55 MPH	660	340
60 MPH	720	420
65 MPH	780	490

* Required
** Suggested

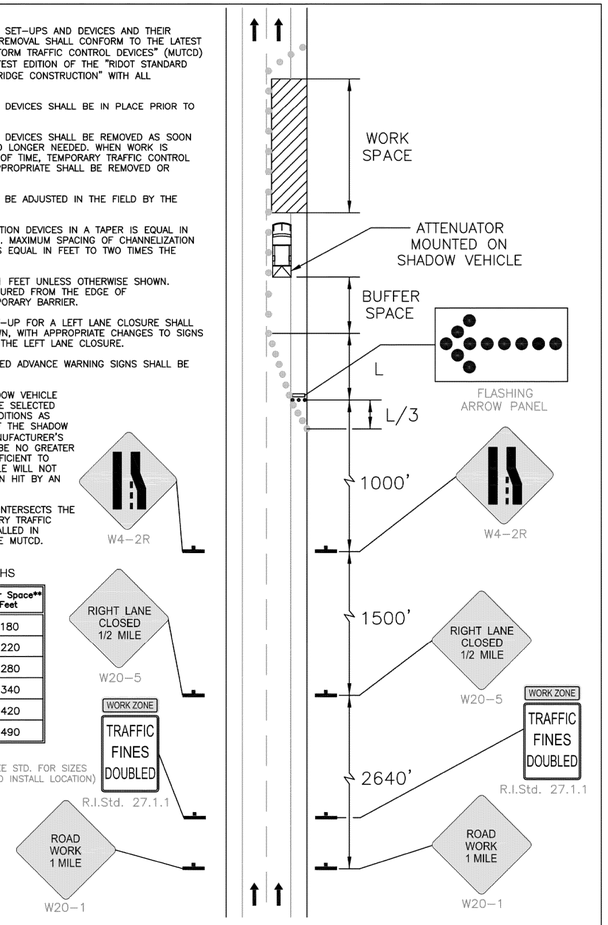

RHODE ISLAND
DEPARTMENT OF TRANSPORTATION

TEMPORARY
TRAFFIC CONTROL PLAN

TYPICAL LANE CLOSURE ON FREEWAY OR EXPRESSWAY

NOT TO SCALE DATE: 12-23-08

NOTES:

1. ALL TEMPORARY TRAFFIC CONTROL SET–UPS AND DEVICES AND THEIR INSTALLATION, MAINTENANCE, AND REMOVAL SHALL CONFORM TO THE LATEST EDITION OF THE "MANUAL ON UNIFORM TRAFFIC CONTROL DEVICES" (MUTCD) WITH ALL REVISIONS, AND THE LATEST EDITION OF THE "RIDOT STANDARD SPECIFICATIONS FOR ROAD AND BRIDGE CONSTRUCTION" WITH ALL REVISIONS.
2. ALL TEMPORARY TRAFFIC CONTROL DEVICES SHALL BE IN PLACE PRIOR TO THE START OF WORK.
3. ALL TEMPORARY TRAFFIC CONTROL DEVICES SHALL BE REMOVED AS SOON AS PRACTICAL WHEN THEY ARE NO LONGER NEEDED. WHEN WORK IS SUSPENDED FOR SHORT PERIODS OF TIME, TEMPORARY TRAFFIC CONTROL DEVICES THAT ARE NO LONGER APPROPRIATE SHALL BE REMOVED OR COVERED.
4. DISTANCES ARE A GUIDE AND MAY BE ADJUSTED IN THE FIELD BY THE ENGINEER.
5. MAXIMUM SPACING OF CHANNELIZATION DEVICES IN A TAPER IS EQUAL IN FEET TO THE SPEED LIMIT IN MPH. MAXIMUM SPACING OF CHANNELIZATION DEVICES IN A TANGENT SECTION IS EQUAL IN FEET TO TWO TIMES THE SPEED LIMIT IN MPH.
6. MINIMUM LANE WIDTH IS TO BE 11 FEET UNLESS OTHERWISE SHOWN. MINIMUM LANE WIDTH TO BE MEASURED FROM THE EDGE OF CHANNELIZATION DEVICES OR TEMPORARY BARRIER.
7. TEMPORARY TRAFFIC CONTROL SET–UP FOR A LEFT SHOULDER CLOSURE SHALL BE SIMILAR TO THE SET–UP SHOWN, WITH APPROPRIATE CHANGES TO SIGNS AND OTHER DEVICES TO INDICATE THE LEFT SHOULDER CLOSURE.
8. THE SIZES OF ALL DIAMOND SHAPED ADVANCE WARNING SIGNS SHALL BE 48" X 48".
9. THE DISTANCE BETWEEN THE SHADOW VEHICLE AND THE WORK SPACE SHOULD BE SELECTED BASED ON TRAFFIC AND SITE CONDITIONS AS WELL AS THE CHARACTERISTICS OF THE SHADOW VEHICLE/ATTENUATOR AND ITS MANUFACTURER'S RECOMMENDATIONS, BUT SHOULD BE NO GREATER THAN THE MINIMUM DISTANCE SUFFICIENT TO ENSURE THAT THE SHADOW VEHICLE WILL NOT ROLL INTO THE WORK SPACE WHEN HIT BY AN ERRANT VEHICLE.
10. WHERE A SIDE STREET OR RAMP INTERSECTS THE WORK ZONE, ADDITIONAL TEMPORARY TRAFFIC CONTROL DEVICES SHALL BE INSTALLED IN ACCORDANCE WITH PART 6 OF THE MUTCD.

TAPER AND BUFFER LENGTHS

Speed Limit	Taper Length* Feet (L)	Buffer Space** Feet
40 MPH	320	180
45 MPH	540	220
50 MPH	600	280
55 MPH	660	340
60 MPH	720	420
65 MPH	780	490

* Required
** Suggested

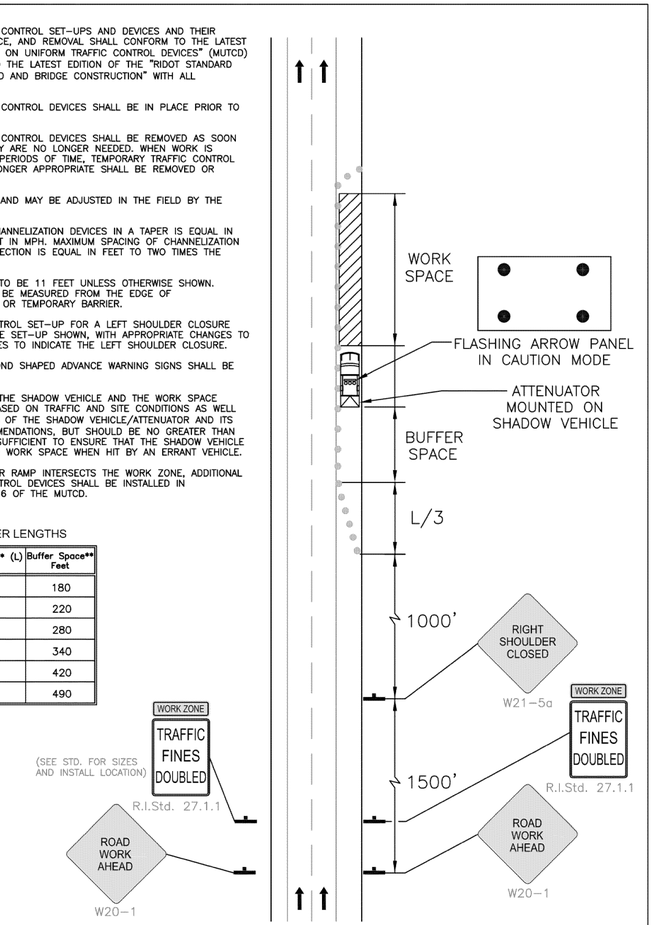

RHODE ISLAND
DEPARTMENT OF TRANSPORTATION

TEMPORARY
TRAFFIC CONTROL PLAN

TYPICAL SHOULDER CLOSURE ON FREEWAY OR EXPRESSWAY

NOT TO SCALE DATE: 12-23-08

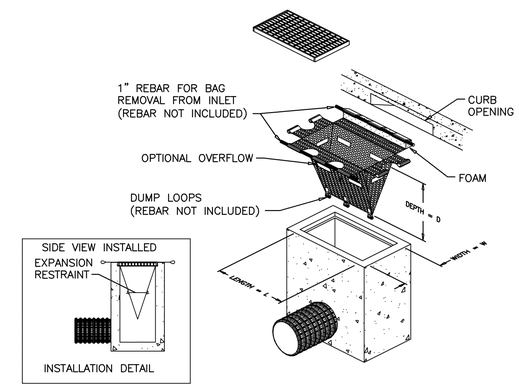

SCCB SEDIMENTATION CONTROL - CATCH BASIN

NOT TO SCALE

REVISIONS		
NO.	DATE	BY

COMMONWEALTH ENGINEERS & CONSULTANTS, INC.
400 SMITH STREET
PROVIDENCE, RI 02908

RHODE ISLAND
DEPARTMENT OF TRANSPORTATION

STATEWIDE BRIDGE REPAIRS
CONTRACT 4 - AMTRAK BRIDGES

RHODE ISLAND

MAINTENANCE AND PROTECTION OF TRAFFIC PLAN No. 10

CHECKED BY _____ DATE _____ SCALE N.T.S.

0113R_V1_082_TCONTROL010