CONNECTICUT DEPARTMENT OF TRANSPORTATION

Plans For

REPLACEMENT OF BRIDGE NO. 04487
EAST STREET OVER PEQUABUCK RIVER

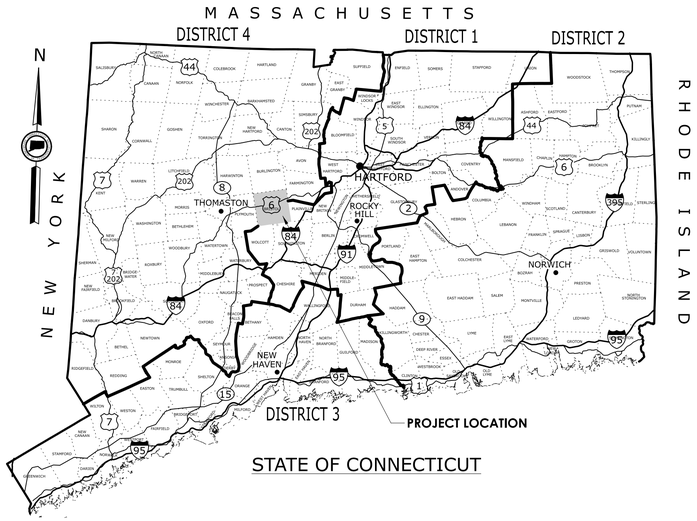

STATE OF CONNECTICUT

Town(s)/City of

BRISTOL, CT

ROAD	MAINTENANCE RESPONSIBILITY	LENGTH
EAST STREET	CITY	230 FEET

F.A.P. #	MAINTENANCE RESPONSIBILITY	PROJECT #
6017(010)	CITY	0017-0192

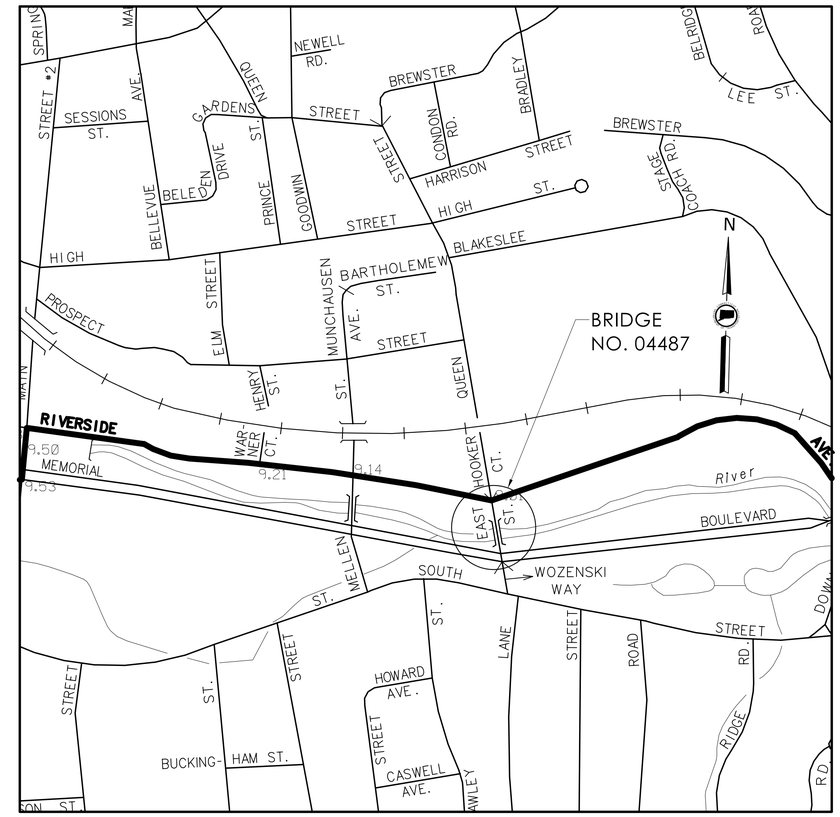

LOCATION PLAN
NOT TO SCALE

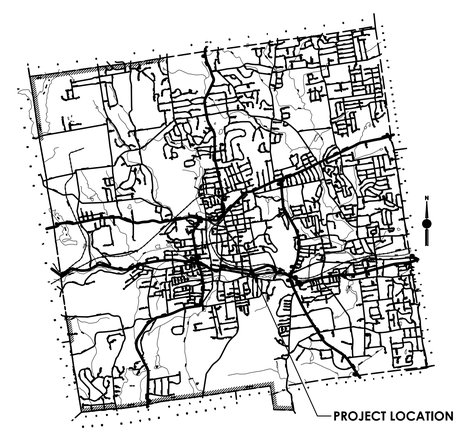

ROAD (ADT) (2022)
EAST STREET (2805)

FUNCTIONAL CLASSIFICATION
URBAN - LOCAL ROAD

DESIGN SPEED
25 MPH

GENERAL NOTES:

1. FEDERAL AID PROJECT NO. 6017(010)
2. CONSTRUCTION SPECIFICATIONS:
   Connecticut Department of Transportation, Standard Specifications for Roads, Bridges and Incidental Construction, Form 818, dated 2020; Supplemental Specifications, dated July 2023; and Special Provisions
3. 400 FOOT GRID BASED ON CONNECTICUT COORDINATE SYSTEM N.A.D. 1983
4. VERTICAL DATUM BASED ON NAVD 1988
5. Surveyed By: GM2 Associates Inc.
6. CONSTRUCTION DISTRICT 1

DISCLAIMER:

IT IS THE RESPONSIBILITY OF EACH BIDDER AND ALL OTHER INTERESTED PARTIES TO OBTAIN ALL BIDDING RELATED INFORMATION AND DOCUMENTS FROM OFFICIAL SOURCES WITHIN THE DEPARTMENT.

PERSONS AND/OR ENTITIES WHICH REPRODUCE AND/OR MAKE SUCH INFORMATION AVAILABLE BY ANY MEANS ARE NOT AUTHORIZED BY THE DEPARTMENT TO DO SO AND MAY BE LIABLE FOR CLAIMS RESULTING FROM THE DISSEMINATION OF UNOFFICIAL, INCOMPLETE AND/OR INACCURATE INFORMATION.

LIST OF DRAWINGS

SHEET NO.	DRAWING TITLE
01	GENERAL
02	DETAILED ESTIMATE SHEET
03	BASELINE DATA AND SURVEY PLAN
04	TYPICAL SECTIONS
05	MISCELLANEOUS DETAILS
06	ROADWAY PLAN
07	ROADWAY PROFILE
08	GRADING AND UTILITY PLAN
09-11	CROSS SECTIONS 1-3
12-29	STRUCTURE PLANS
30	DETOUR PLAN

LIST OF CTDOT STANDARD DRAWINGS

SHEET NO.	DRAWING TITLE
HW-211_01	ANTI-TRACKING PAD
HW-586_01	CATCH BASIN AND DROP INLET TYPES "C" AND "C-L" STRUCTURES
HW-586 07a	CATCH BASIN TOPS TYPE "C" AND "C-L" TOPS
HW-811_01	CONCRETE CURBING
HW-813_01	GRANITE STONE TRANSITION CURBING
HW-813_02	STONE CURBING
HW-822_01	TEMPORARY PRECAST CONCRETE BARRIER CURB
HW-822 02a	TEMPORARY TRAFFIC BARRIER - DETAILS
HW-921_01	CONCRETE SIDEWALKS
HW-922_01	BITUMINOUS CONCRETE SIDEWALK AND BITUMINOUS CONCRETE DRIVEWAY
HW-924_01	CONCRETE DRIVEWAY RAMPS
TR-1208-01	SIGN PLACEMENT AND RETROREFLECTIVE STRIP DETAILS
TR-1208-02	METAL SIGN POSTS AND SIGN MOUNTING DETAILS
TR-1210-04	PAVEMENT MARKING LINES AND SYMBOLS
TR-1220-01	SIGNS FOR CONSTRUCTION AND PERMIT OPERATIONS
TR-1220-02	CONSTRUCTION SIGN SUPPORTS AND CHANNELIZING DEVICES

STANDARD CONVENTIONS

North Arrow W/No. Coor.
Grid Arrow
Edge Of Road
Concrete Pavement
Dirt Road
B.C.L.C.
Granite Curb
Guide Rail
Concrete Median Barrier
Bit. Walk
Conc. Sidewalk
Railroad Tracks
Limit Of Marsh
Stone Wall
Ledge Outcrop
Inland Wetland Limits
STATE LINE
Power Line
Swamp
Building
Transmission Tower
Chain Link Fence
Rustic Fence
Pipe Fence
Board Fence
Property Line
Lot Line
Easement Line
Water Edge
Stream
Ditch
TOWN LINE
Highway Line
Street Line
Riprap
Hedge Row
Tree Line
Shrub
Evergreen Tree
Deciduous Tree
Retaining Wall

GM2 ASSOCIATES, INC.
115 GLASTONBURY BLVD.
GLASTONBURY, CT 06033

STATE OF CONNECTICUT
JAGDEESH GOPAL
No. 24264
LICENSED PROFESSIONAL ENGINEER

Jagdeesh Gopal
2024.04.02
18:32:48-04'00'

Plans For
REPLACEMENT OF BRIDGE NO. 04487
EAST STREET OVER PEQUABUCK RIVER

Town(s)/City
BRISTOL

STATE PROJECT NO.
0017-0192

DRAWING NO.
G-01

SHEET NO.
1

ITEM NUMBER	0020903 A	0201001	0202000	0202100	0202213 A	0202315 A	0202512	0202529	0202911 A	0203202	0203304	0204001	0205901	0212000	0213100	0216000	0219001	0219011 A	0286001.10	0304002	0406171	0406173	0406236	0406303 A	0503001 A	0559001	0513003	0514217	0521021 A	0586001.10	0586040.10	0586401	0586750	0601042	0601064	0601066	0601091 A	0601118	0601121	0601122	0601123	0601124	0601502	0601504	0602030	0603801	0686000.15	0686000.24	0703011	0707009 A	0708001
ITEM	LEAD COMPLIANCE FOR MISCELLANEOUS EXTERIOR TASKS	CLEARING AND GRUBBING	EARTH EXCAVATION	ROCK EXCAVATION	REUSE OF EXISTING CHANNEL BOTTOM MATERIAL	DISPOSAL OF CONTROLLED MATERIALS	CUT CONCRETE SIDEWALK	CUT BITUMINOUS CONCRETE PAVEMENT	CONDITION SURVEY (SITE NO. 1)	STRUCTURE EXCAVATION-EARTH (EXCLUDING COFFERDAM AND DEWATERING)	STRUCTURE EXCAVATION-ROCK (EXCLUDING COFFERDAM AND DEWATERING)	COFFERDAM AND DEWATERING	FORMATION OF SUBGRADE	SUBBASE	GRANULAR FILL	PERVIOUS STRUCTURE BACKFILL	SEDIMENTATION CONTROL SYSTEM	SEDIMENT CONTROL SYSTEM AT CATCH BASIN	ROCK IN DRAINAGE TRENCH EXCAVATION 0' - 10' DEEP	PROCESSED AGGREGATE BASE	HMA S0.5	HMA S0.25	MATERIAL FOR TACK COAT	SAWING AND SEALING JOINTS	REMOVAL OF SUPERSTRUCTURE	WELDED STUDS	1-1/2" POLYVINYL CHLORIDE PLASTIC PIPE	PRESTRESSED DECK UNITS (4'-0" X 1'-0")	STEEL-LAMINATED ELASTOMERIC BEARINGS	TYPE 'C' CATCH BASIN - 0'-10' DEEP	TYPE 'C-1' CATCH BASIN0'-10' DEEP	RESET TYPE 'C' CATCH BASIN	TYPE 'C' CATCH BASIN TOP	FOOTING CONCRETE	ABUTMENT AND WALL CONCRETE	COLUMN AND CAP CONCRETE	SIMULATED STONE MASONRY	BRIDGE DECK CONCRETE	PARAPET CONCRETE	BRIDGE SIDEWALK CONCRETE	APPROACH SLAB CONCRETE	BARRIER WALL CONCRETE	1/2" PREFORMED EXPANSION JOINT FILLER FOR BRIDGES	1" PREFORMED EXPANSION JOINT FILLER FOR BRIDGES	DEFORMED STEEL BARS - GALVANIZED	STRUCTURAL STEEL	1.5" R.C. PIPE - 0' - 10' DEEP	2.4" R.C. PIPE - 0' - 10' DEEP	INTERMEDIATE RIPRAP	MEMBRANE WATERPROOFING (COLD LIQUID ELASTOMERIC)	DAMPPROOFING
UNIT	L.S.	L.S.	C.Y.	C.Y.	C.Y.	TON	L.F.	L.F.	L.S.	C.Y.	C.Y.	L.F.	S.Y.	C.Y.	C.Y.	C.Y.	L.F.	EA.	C.Y.	C.Y.	TON	TON	GAL.	L.F.	L.S.	EA.	L.F.	L.F.	C.I.	EA.	EA.	EA.	EA.	C.Y.	C.Y.	C.Y.	S.Y.	C.Y.	L.F.	C.Y.	C.Y.	C.Y.	S.F.	S.F.	LB.	CWT	L.F.	L.F.	C.Y.	S.Y.	S.Y.
SUBTOTAL	1	1	345	10	157	1125	26	288	1	784	183	539	554	184	5	545	91	3	10	92	168	21	56	153	1	20	31	728	30000	1	1	1	1	139	197	48	62	56	8	37	101	26	214	265	87200	10	35	18	14	390	247
UNASSIGNED	0	0	0	0	18	0	4	2	0	81	38	1	6	6	1	55	9	0	0	8	11	4	4	2	0	0	4	0	0	0	0	0	0	14	20	6	6	7	0	5	11	3	26	30	0	3	0	0	2	0	28
TOTAL	1	1	345	10	175	1125	30	290	1	865	221	540	560	190	6	600	100	3	10	100	179	25	60	155	1	20	35	728	30000	1	1	1	1	153	217	54	68	63	8	42	112	29	240	295	87200	13	35	18	16	390	275

ITEM NUMBER	0714500	0728032 A	0753009	0811001	0813001	0813011	0819002 A	0822100.01	0904990 A	0921001	0921005	0921048	0922501	0924006	0943001	0944020	0950005	0969060 A	0971001 A	0974001 A	0975004	0976002	0977001	0978002	0979003	0979004	0980020	1014910	1131002	1206023 A	1207041	1210102	1210105	1220027 A	1301025	1301770 A	1301861 A
ITEM	TEMPORARY EARTH RETAINING SYSTEM	NO. 6 CRUSHED STONE	GEOTEXTILE	CONCRETE CURBING	5' GRANITE STONE CURBING	5' GRANITE CURVED STONE CURBING	PENETRATING SEALER PROTECTIVE COMPOUND	TEMPORARY TRAFFIC BARRIER	METAL BRIDGE RAIL	CONCRETE SIDEWALK	CONCRETE SIDEWALK RAMP	DETECTABLE WARNING SURFACE	BITUMINOUS CONCRETE DRIVEWAY	CONCRETE DRIVEWAY RAMP	WATER FOR DUST CONTROL	FURNISHING AND PLACING TOPSOIL	TURF ESTABLISHMENT	CONSTRUCTION FIELD OFFICE, SMALL	MAINTENANCE AND PROTECTION OF TRAFFIC	REMOVAL OF EXISTING MASONRY	MOBILIZATION AND PROJECT CLOSEOUT	BARRICADE WARNING LIGHTS - HIGH INTENSITY	TRAFFIC CONE	TRAFFIC DRUM	CONSTRUCTION BARRICADE TYPE III	CONSTRUCTION BARRICADE DETECTABLE	CONSTRUCTION SURVEYING	UTILITY RELOCATION	REMOVE CONTROL CHANGEABLE MESSAGE SIGN	REMOVAL AND RELOCATION OF EXISTING SIGNS	SIGN FACE - EXTRUDED ALUMINUM (TYPE XI RETROREFLECTIVE SHEETING)	4" YELLOW EPOXY RESIN PAVEMENT MARKINGS	EPOXY RESIN PAVEMENT MARKINGS, SYMBOLS AND LEGENDS	CONSTRUCTION SIGNS	TEST PIPING SYSTEM (WATER MAIN)	FURNISH AND INSTALL 8" WATER MAIN ON BRIDGE	FURNISH DUCTILE IRON PIPE, VALVES, AND MISCELLANEOUS FITTINGS (WATER MAIN)
UNIT	S.F.	C.Y.	S.Y.	L.F.	L.F.	L.F.	S.Y.	L.F.	L.F.	S.F.	S.F.	S.F.	S.Y.	S.F.	M. GAL.	S.Y.	S.Y.	MO.	L.S.	C.Y.	L.S.	DAY	EA.	EA.	EA.	EA.	L.S.	L.S.	DAY	L.S.	S.F.	L.F.	S.F.	S.F.	L.S.	L.S.	L.S.
SUBTOTAL	4120	12	29	104	34	28	290	220	179	1059	233	43	95	810	64	281	281	9	1	263	1	2160	20	20	19	4	1	1	568	1	18	422	190	360	1	1	1
UNASSIGNED	0	1	6	0	0	0	30	0	0	61	17	7	5	50	0	29	29	0	0	27	0	0	0	0	0	0	0	0	0	0	2	48	19	36	0	0	0
TOTAL	4120	13	35	104	34	28	320	220	179	1120	250	50	100	860	64	310	310	9	1	290	1	2160	20	20	19	4	1	1	568	1	20	470	209	396	1	1	1

REV.	DATE	REVISION DESCRIPTION

DESIGNER/DRAFTER: NAB CHECKED BY: PMB

NOT TO SCALE

SIGNATURE/ BLOCK:

GM2 ASSOCIATES, INC.
115 GLASTONBURY BLVD.
GLASTONBURY, CT 06033

CITY OF BRISTOL

PROJECT NUMBER: 0017-0192
PROJECT DESCRIPTION: REPLACEMENT OF BRIDGE NO. 04487, EAST STREET OVER PEQUABUCK RIVER
TOWN(S): BRISTOL
DRAWING TITLE: DETAILED ESTIMATE SHEET

DRAWING NO. EST-01
SHEET NO. 2

LASTED SAVED BY: NBibeau **FILE NAME:** M:\017_192_East Street_Bristol\330_Design Data\Highways\Contract_Plans\HW_CP_0017_0192_EST.dgn
PLOTTED DATE: 3/28/2024

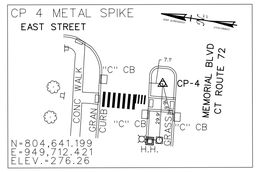

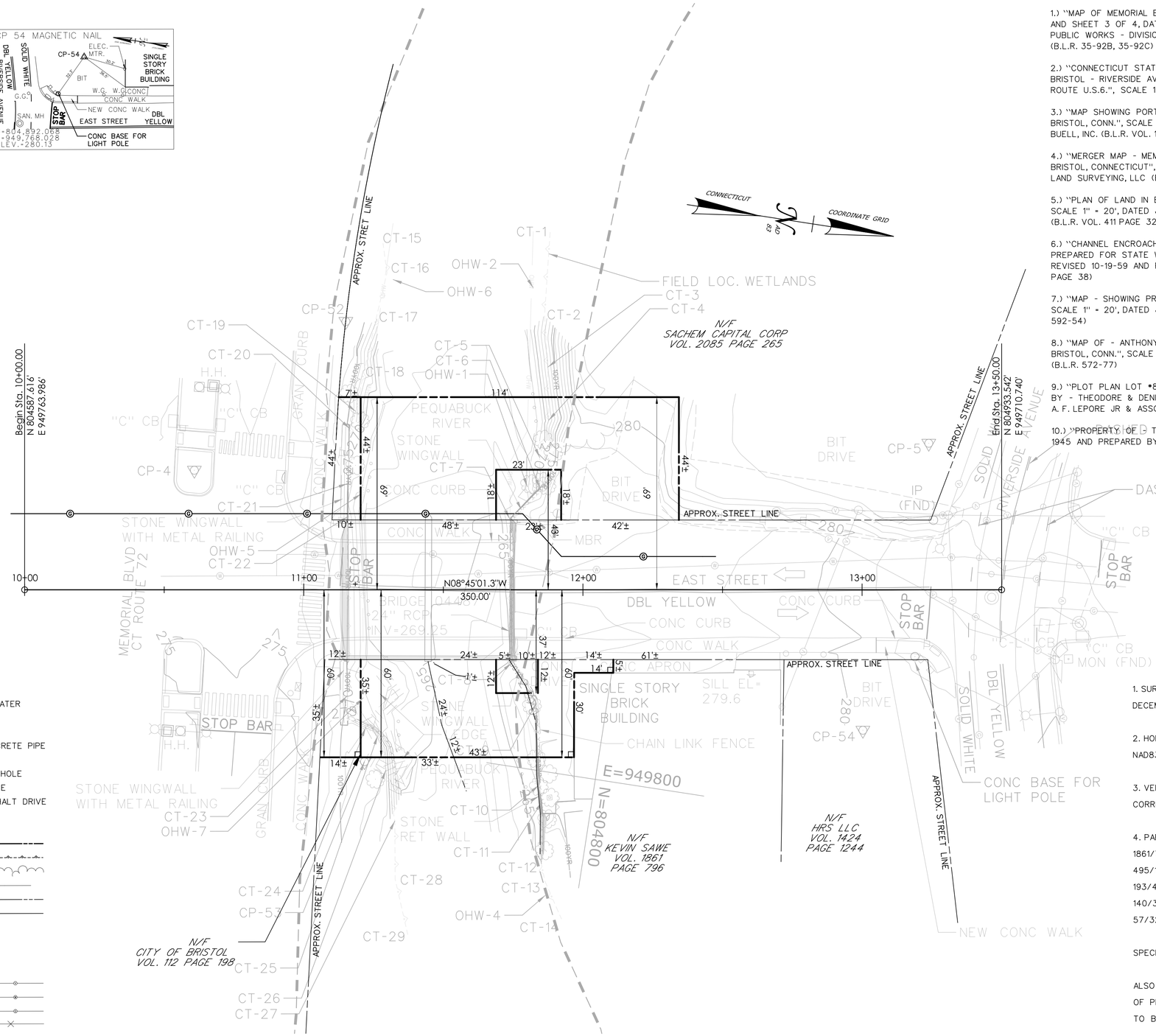

MAP REFERENCES

1.) "MAP OF MEMORIAL BOULEVARD - BRISTOL, CT.", SCALE 1" = 40', SHEET 2 OF 4 AND SHEET 3 OF 4, DATED JUNE 2009 AND PREPARED BY THE DEPARTMENT OF PUBLIC WORKS - DIVISION OF ENGINEERING - CITY OF BRISTOL - CONNECTICUT (B.L.R. 35-92B, 35-92C)

2.) "CONNECTICUT STATE HIGHWAY DEPARTMENT - RIGHT OF WAY MAP - TOWN OF BRISTOL - RIVERSIDE AVENUE FROM THE BOULEVARD WESTERLY TO MAIN ST. - ROUTE U.S.6.", SCALE 1" = 40', DATED MARCH 31, 1937 (17-05)

3.) "MAP SHOWING PORTION OF PROPERTY BELONGING TO A.L. SESSIONS EST. - BRISTOL, CONN.", SCALE 1" = 50', DATED SEPT. 1937 AND PREPARED BY SPERRY & BUELL, INC. (B.L.R. VOL. 179 PAGE 552)

4.) "MERGER MAP - MEMORIAL BOULEVARD SCHOOL - PREPARED FOR CITY OF BRISTOL - BRISTOL, CONNECTICUT", SCALE 1" = 40', DATED 6-30-2020 AND PREPARED BY CLARK LAND SURVEYING, LLC (B.L.R. Q-464)

5.) "PLAN OF LAND IN BRISTOL, CONN. - FORMERLY USED AS TECHNICAL HIGH SCHOOL", SCALE 1" = 20', DATED JUNE 30, 1960, AND PREPARED BY ADRIAN M. MATTHEWS (B.L.R. VOL. 411 PAGE 32)

6.) "CHANNEL ENCROACHMENT LINES - PORTION OF PEQUABUCK RIVER - BRISTOL, CONN.", PREPARED FOR STATE WATER RESOURCES COMMISSION, SCALE 1" = 100', DATED 3-19-59, REVISED 10-19-59 AND PREPARED BY JOHN J MOZZOCHI & ASSOCIATES (B.L.R. VOL. 396 PAGE 38)

7.) "MAP - SHOWING PROPERTY OF - PLANTSVILLE NATIONAL BANK - BRISTOL, CONN.", SCALE 1" = 20', DATED JUNE 1940 AND PREPARED BY SPERRY & BUELL, INC. (B.L.R 572-71, 592-54)

8.) "MAP OF - ANTHONY & ANGELINA DALESIO PROPERTY - RIVERSIDE AVE & EAST ST. - BRISTOL, CONN.", SCALE 1" = 40', DATED FEB. 1932 AND PREPARED BY SPERRY AND BUELL, INC. (B.L.R. 572-77)

9.) "PLOT PLAN LOT #8B - #9 EAST STREET - BRISTOL, CONNECTICUT - TO BE PURCHASED BY - THEODORE & DENISE DZIEKAN", SCALE 1" = 20', DATED 12-15-86 AND PREPARED BY A. F. LEPORE JR & ASSOC. (B.L.R. ASSESSORS MAP #304)

10.) "PROPERTY OF - THEODORE C. TRUDON - BRISTOL, CONN", SCALE 1" = 20', DATED NOVEMBER 1945 AND PREPARED BY A. W. BACON (B.L.R. 19-1)

LEGEND

GRAN	GRANITE
H.H.	HAND HOLE
OHW	ORDINARY HIGH WATER
G.G.	GAS GATE
W.G.	WATER GATE
RCP	REINFORCED CONCRETE PIPE
CP	CONTROL POINT
STR. MH	STORMWATER MANHOLE
SAN. MH	SANITARY MANHOLE
BIT DRIVE	BITUMONOUS ASPHALT DRIVE
RET WALL	RETAINING WALL
CONC	CONCRETE
APPROXIMATE STREET LINE	
FIELD LOCATED WETLANDS	
TREE LINE	
EDGE OF WATER	
PROPERTY LINE	
CONTOUR LINE	100
TYPE "C" CB	
DECIDUOUS TREE	
UTILITY POLE WITH LIGHT	
SIGN	
OVERHEAD WIRE(S)	
UNDERGROUND WATER LINE	
UNDERGROUND GAS LINE	
CHAIN LINK FENCE	

NOTES

1. SURVEY BY TOTAL STATION BETWEEN THE DATES OF DECEMBER 1 AND DECEMBER 11, 2020.

2. HORIZONTAL DATUM BASED ON CT STATE PLANE COORDINATE SYSTEM, NAD83, AS ESTABLISHED BY NETWORK-CORRECTED RTK GPS.

3. VERTICAL DATUM BASED ON NAVD 88, AS ESTABLISHED BY NETWORK CORRECTED RTK GPS.

4. PARCEL OWNERSHIP UNKOWN - ATTENTION IS CALLED TO DEEDS 1861/796, 1309/198, 854/8, 654/430, 596/600, 594/872, 573/367, 495/147, 393/117, 227/230, 229/590, 196/310, 190/420, 190/285, 193/455, 145/483, 78/37, 159/402, 140/369, 131/381, 140/368, 140/367, 84/331, 77/134, 67/184, 57/653, 61/217, 54/362, 57/329, 57/503, 55/520, 47/413, 41/657 & 43/16

SPECIFIC ATTENTION IS CALLED TO DEEDS 43/16, 77/134 & 190/285

ALSO OF NOTE, OWNERSHIP OF RETAINING WALL ON SOUTHERLY BOUNDARY OF PROPERTY OWNED BY KEVIN SAWE, PER MAP REFERENCE #6, APPEARS TO BE THE CITY OF BRISTOL

REV.	DATE	REVISION DESCRIPTION

DESIGNER/DRAFTER: NAB CHECKED BY: PMB

0 20' 40'
HORIZONTAL SCALE 1" = 20'

SIGNATURE/BLOCK:
GM2 ASSOCIATES, INC.
115 GLASTONBURY BLVD.
GLASTONBURY, CT 06033

CITY OF BRISTOL

PROJECT NUMBER: 0017-0192
PROJECT DESCRIPTION: REPLACEMENT OF BRIDGE NO. 04487, EAST STREET OVER PEQUABUCK RIVER
TOWN(S): BRISTOL
DRAWING TITLE: BASELINE DATA AND SURVEY PLAN

DRAWING NO. TIE-01
SHEET NO. 3

LASTED SAVED BY: NBibeau **FILE NAME:** M:\017_192_East Street_Bristol\330_Design Data\Highways\Contract_Plans\HW_CP_0017_0192_TitleMylar.dgn
PLOTTED DATE: 1/22/2024

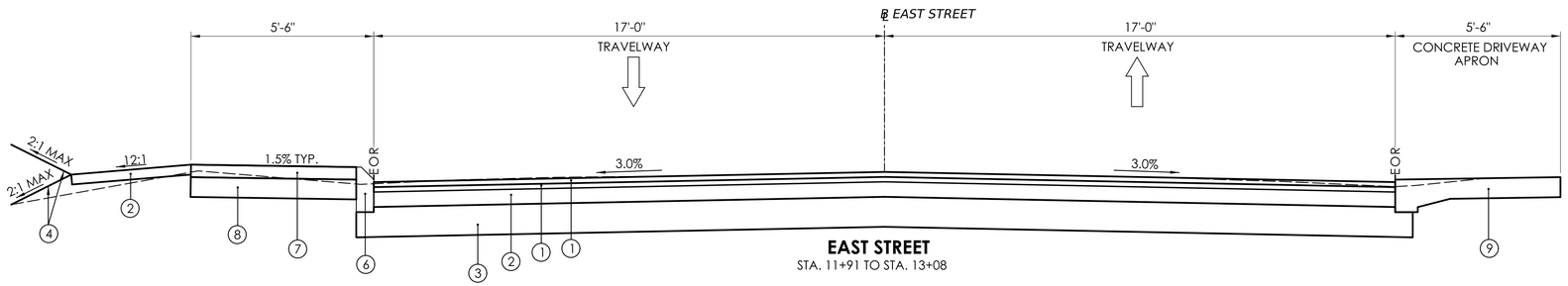

EAST STREET
STA. 11+91 TO STA. 13+08

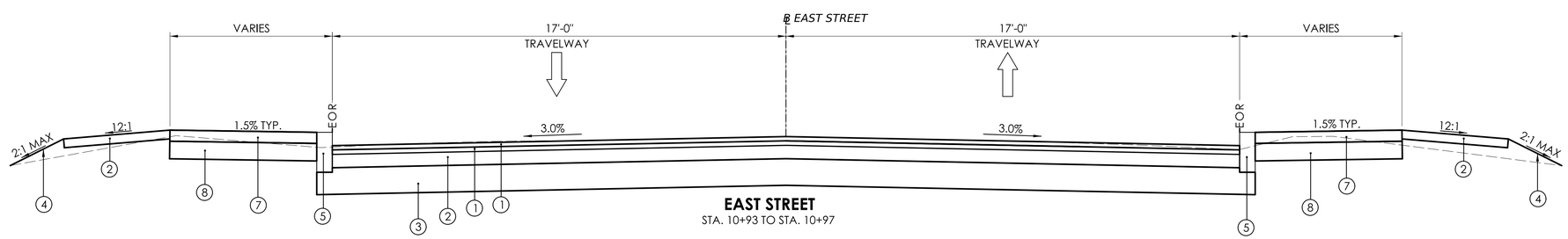

EAST STREET
STA. 10+93 TO STA. 10+97

LEGEND

1. 2" HMA S0.5 TRAFFIC LEVEL 2
2. 6" PROCESSED AGGREGATE BASE
3. 12" SUBBASE
4. 4" TOPSOIL AND TURF ESTABLISHMENT
5. 5" GRANITE STONE CURBING
6. CONCRETE CURBING
7. CONCRETE SIDEWALK
8. 8" PROCESSED AGGREGATE BASE
9. CONCRETE DRIVEWAY APRON

NOTES:

1. SEE DRAWING NO. PLN-01, ROADWAY PLAN FOR PAVEMENT LIMITS.
2. UPON COMPLETION OF ALL OTHER CONSTRUCTION ITEMS, THE FINAL COURSE OF HMA SHALL BE PLACED IN ONE OPERATION OVER THE LIMITS SHOWN ON THE ROADWAY PLAN TO CREATE A CLEAN UNIFORM SURFACE.
3. SLOPES 2:1 OR FLATTER REQUIRE "FURNISHING AND PLACING TOPSOIL" 4" THICK AND "TURF ESTABLISHMENT - LAWN."

REV.	DATE	REVISION DESCRIPTION

DESIGNER/DRAFTER: NAB CHECKED BY: PMB

NOT TO SCALE

SIGNATURE/BLOCK: GM2 ASSOCIATES, INC. 115 GLASTONBURY BLVD. GLASTONBURY, CT 06033

CITY OF BRISTOL

PROJECT NUMBER: 0017-0192
PROJECT DESCRIPTION: REPLACEMENT OF BRIDGE NO. 04487, EAST STREET OVER PEQUABUCK RIVER
TOWN(S): BRISTOL
DRAWING TITLE: TYPICAL SECTIONS

DRAWING NO. TYP-01
SHEET NO. 4

LASTED SAVED BY: NBilbeau **FILE NAME:** M:\017_192_East Street_Bristol\330_Design Data\Highways\Contract_Plans\HW_CP_0017_0192_TYP.dgn
PLOTTED DATE: 1/22/2024

GENERAL NOTES:

1. SIDEWALK RAMPS SHALL HAVE A COARSE BROOM FINISH TRANSVERSE TO THE SLOPE OF THE RAMP.
2. VERTICAL SURFACE DISCONTINUITIES AT JOINTS SHALL NOT EXCEED ¼ INCH.
3. REMOVAL OF EXISTING SIDEWALK FOR NEW RAMP INSTALLATIONS SHALL BE TO THE NEAREST EXPANSION OR CONTRACTION JOINT.
4. THE RUNNING SLOPE OF THE CURB RAMP SHALL BE 8.33 PERCENT MAXIMUM BUT SHALL NOT REQUIRE THE RAMP LENGTH TO EXCEED 15 FEET.

GENERAL NOTES:

1. ROUNDED BOULDERS APPROXIMATELY 2-3 FT. MIN. DIAMETER SHALL BE PLACED IN CLUSTERS, AS DIRECTED IN THE FIELD BY THE ENGINEER OR THEIR AUTHORIZED DELEGATE. SEE SPECIAL PROVISION "PLACEMENT OF CHANNEL BOULDER"
2. FOR MULTIPLE CLUSTERS, THE DISTANCE BETWEEN CLUSTERS WILL BE BASED ON FIELD CONDITIONS

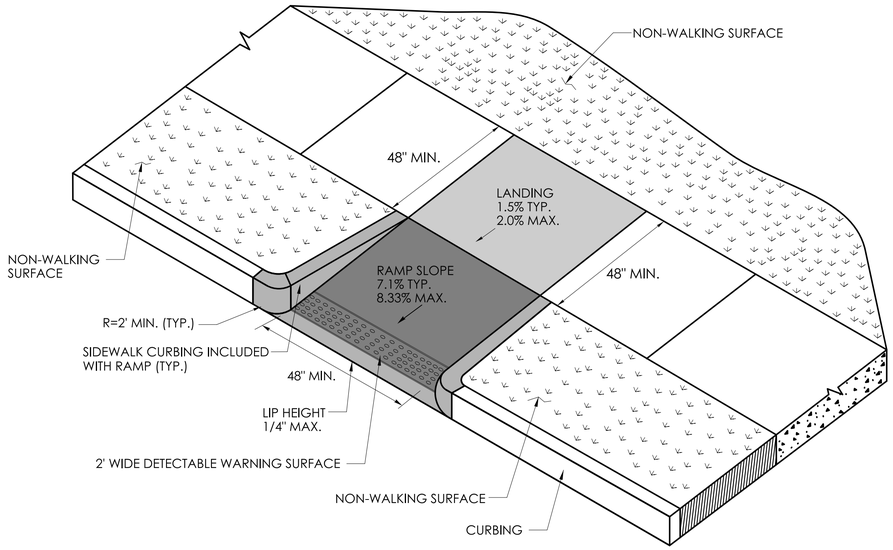

PERPENDICULAR RAMP
WITH NON-WALKING SURFACE
(TYPE 13)
NOT TO SCALE

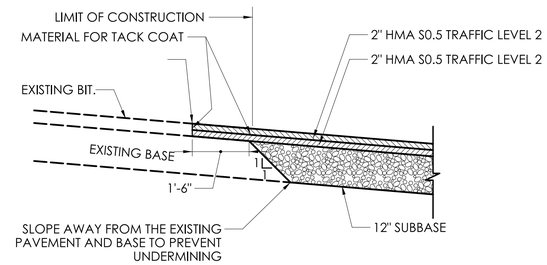

PAVEMENT TRANSITION DETAIL FOR
PLACEMENT AT EXISTING PAVEMENT
NOT TO SCALE

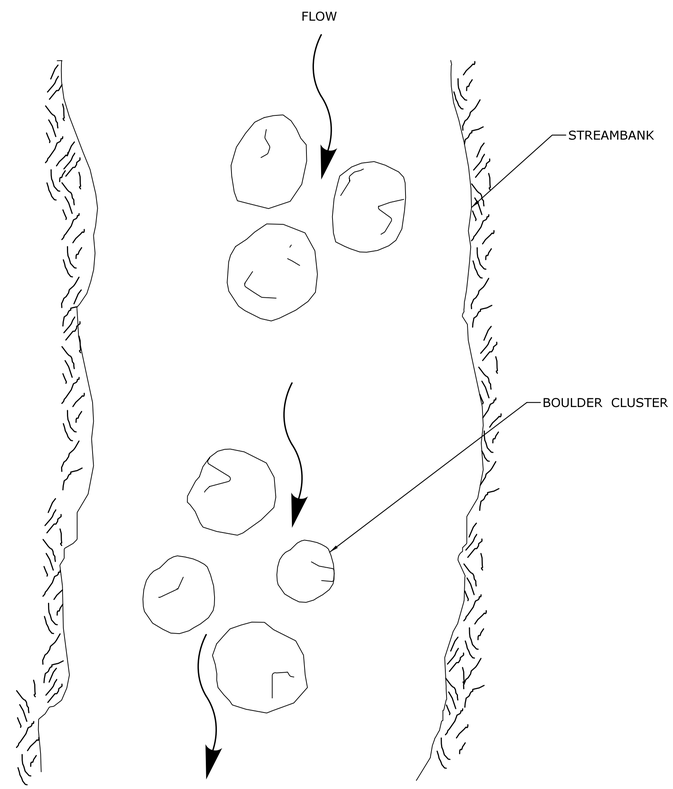

PLACEMENT OF CHANNEL BOULDERS
PLAN VIEW
NOT TO SCALE

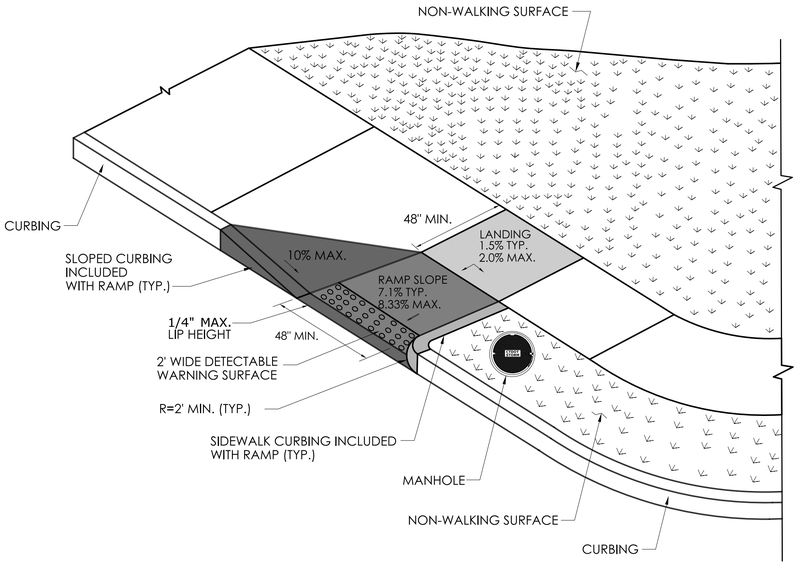

PERPENDICULAR RAMP
WITH NON-WALKING SURFACE
(TYPE 18 LEFT)
NOT TO SCALE

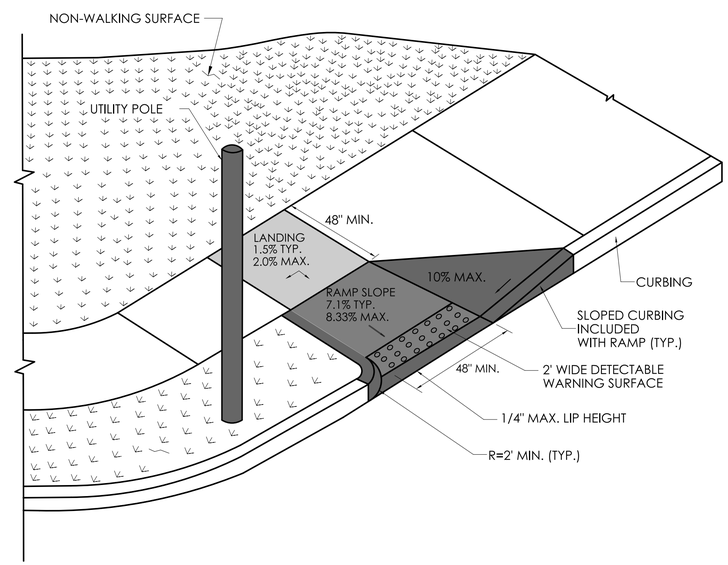

PERPENDICULAR RAMP
WITH NON-WALKING SURFACE
(TYPE 18 RIGHT)
NOT TO SCALE

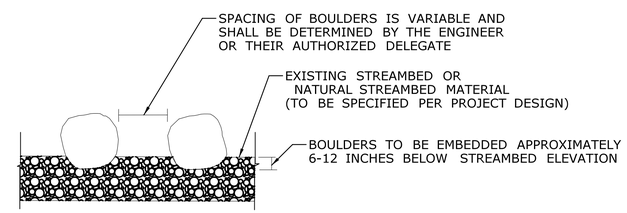

PLACEMENT OF CHANNEL BOULDERS
SECTION VIEW
NOT TO SCALE

REV.	DATE	REVISION DESCRIPTION

DESIGNER/DRAFTER: NAB CHECKED BY: PMB

NOT TO SCALE

SIGNATURE/BLOCK: GM2 ASSOCIATES, INC. 115 GLASTONBURY BLVD. GLASTONBURY, CT 06033

CITY OF BRISTOL

PROJECT NUMBER: 0017-0192
PROJECT DESCRIPTION: REPLACEMENT OF BRIDGE NO. 04487, EAST STREET OVER PEQUABUCK RIVER
TOWN(S): BRISTOL
DRAWING TITLE: MISCELLANEOUS DETAILS

DRAWING NO. MDS-01
SHEET NO. 5

LASTED SAVED BY: NBibeau FILE NAME: M:\017_192_East Street_Bristol\330_Design Data\Highways\Contract_Plans\HW_CP_0017_0192_MDS.dgn
PLOTTED DATE: 1/22/2024

ROW LEGEND

- (A) PARTIAL TAKE REQUIRED
- (B) CONSTRUCTION EASEMENT REQURIED
- (C) SLOPE EASEMENT FOR THE SAFETY OF THE HIGHWAY
- (D) RIGHT TO INSTALL SEDIMENTATION CONTROL SYSTEM REQUIRED

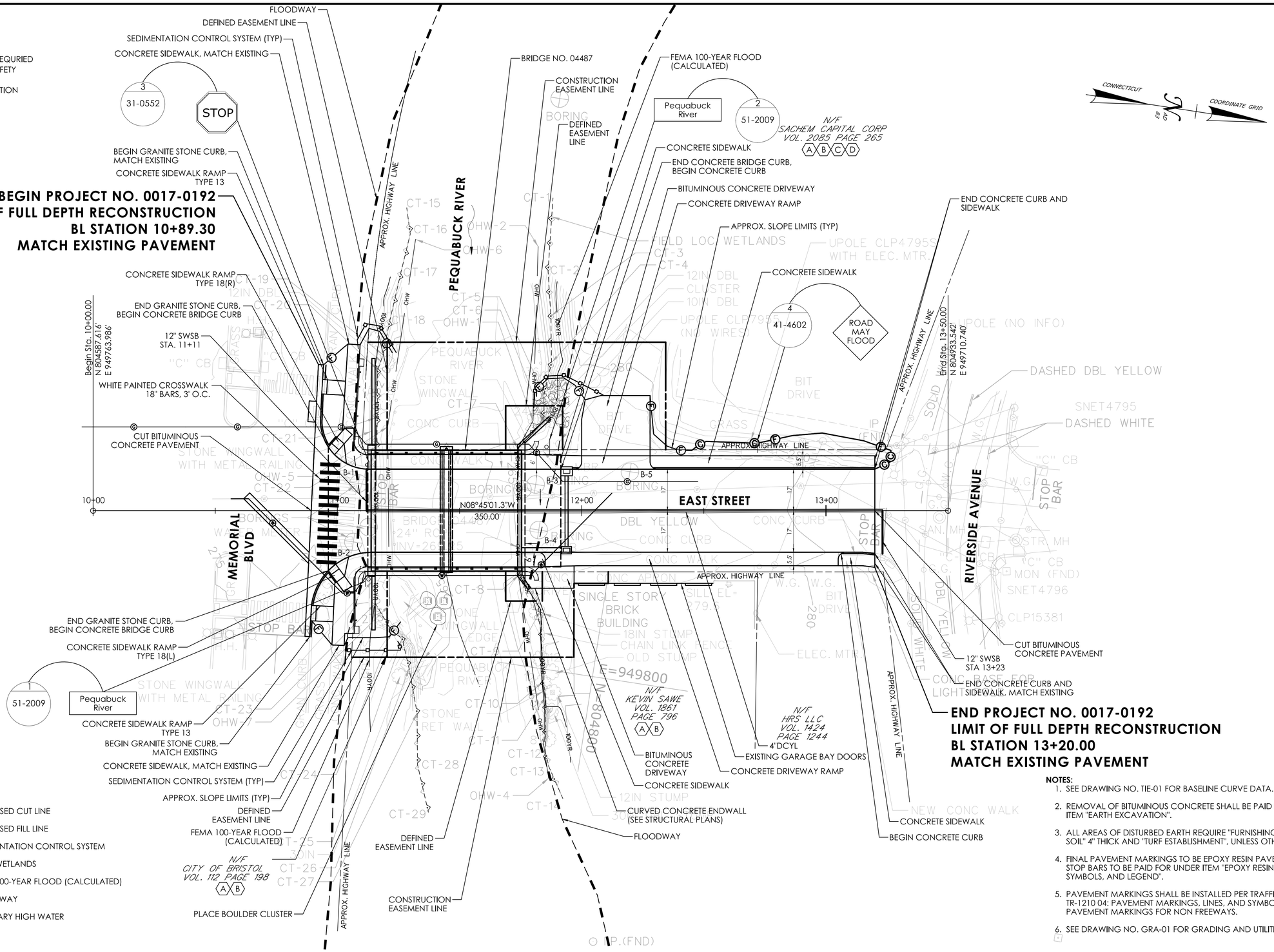

LEGEND

- PROPOSED CUT LINE
- PROPOSED FILL LINE
- SEDIMENTATION CONTROL SYSTEM
- STATE WETLANDS
- 100YR - FEMA 100-YEAR FLOOD (CALCULATED)
- FLOODWAY
- OHW - ORDINARY HIGH WATER

NOTES:

1. SEE DRAWING NO. TIE-01 FOR BASELINE CURVE DATA.
2. REMOVAL OF BITUMINOUS CONCRETE SHALL BE PAID FOR UNDER THE ITEM "EARTH EXCAVATION".
3. ALL AREAS OF DISTURBED EARTH REQUIRE "FURNISHING AND PLACING TOP SOIL" 4" THICK AND "TURF ESTABLISHMENT", UNLESS OTHERWISE NOTED.
4. FINAL PAVEMENT MARKINGS TO BE EPOXY RESIN PAVEMENT MARKINGS. STOP BARS TO BE PAID FOR UNDER ITEM "EPOXY RESIN PAVEMENT MARKINGS, SYMBOLS, AND LEGEND".
5. PAVEMENT MARKINGS SHALL BE INSTALLED PER TRAFFIC STANDARD SHEETS TR-1210 04: PAVEMENT MARKINGS, LINES, AND SYMBOLS AND TR 1210 08 PAVEMENT MARKINGS FOR NON FREEWAYS.
6. SEE DRAWING NO. GRA-01 FOR GRADING AND UTILITIES

REV.	DATE	REVISION DESCRIPTION

DESIGNER/DRAFTER: NAB CHECKED BY: PMB

HORIZONTAL SCALE 1" = 20' (0, 20', 40')

SIGNATURE/BLOCK: GM2 ASSOCIATES, INC. 115 GLASTONBURY BLVD. GLASTONBURY, CT 06033

CITY OF BRISTOL

PROJECT NUMBER: 0017-0192
PROJECT DESCRIPTION: REPLACEMENT OF BRIDGE NO. 04487, EAST STREET OVER PEQUABUCK RIVER
TOWN(S): BRISTOL
DRAWING TITLE: ROADWAY PLAN

DRAWING NO. PLN-01
SHEET NO. 6

LASTED SAVED BY: NBibeau FILE NAME: M:\017_192_East Street_Bristol\330_Design Data\Highways\Contract_Plans\HW_CP_0017_0192_PlanPro1.dgn
PLOTTED DATE: 1/24/2024

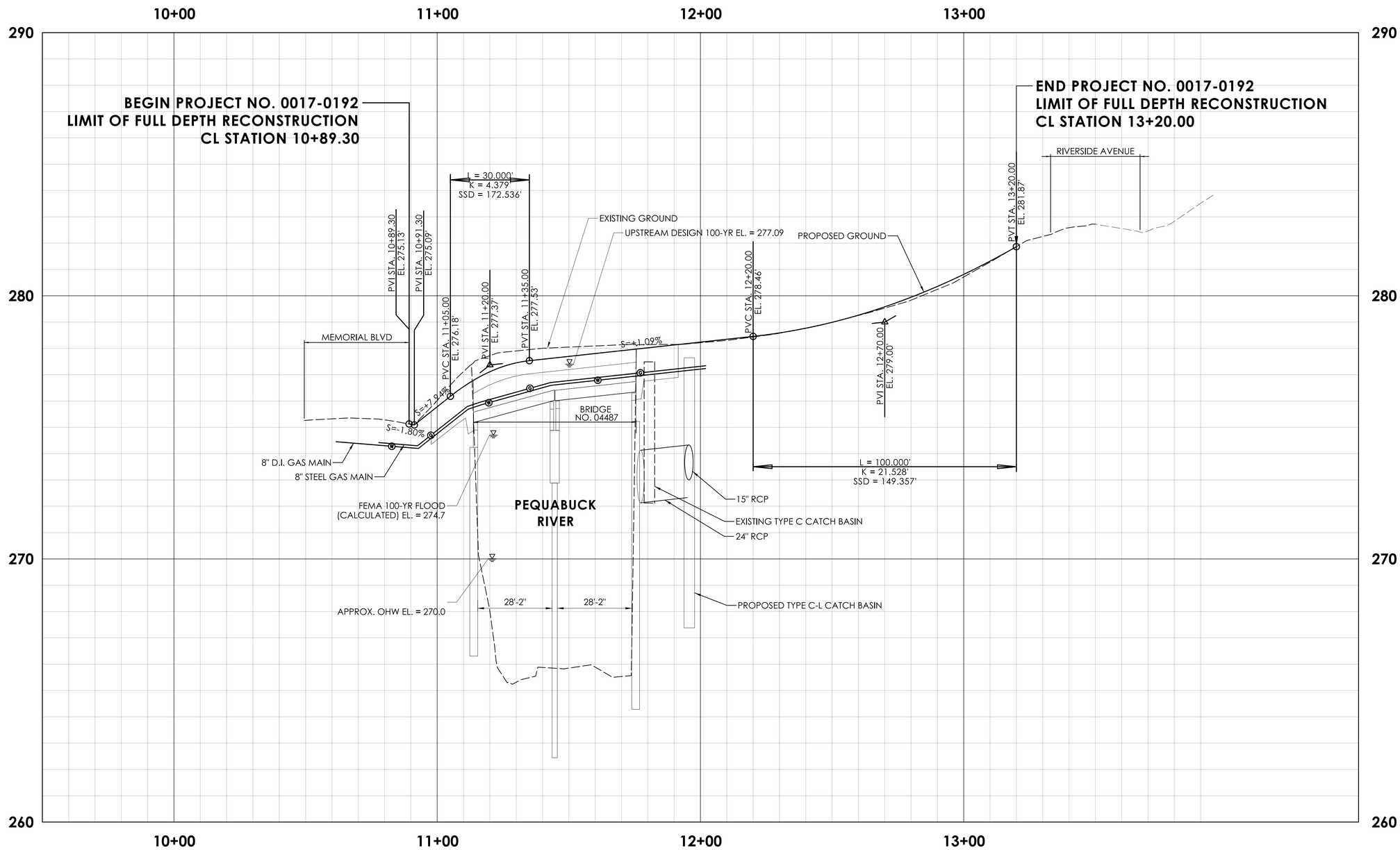

REV.	DATE	REVISION DESCRIPTION

DESIGNER/DRAFTER: NAB CHECKED BY: PMB

0 20 40 HORIZONTAL SCALE IN FEET

0 2 4 VERTICAL SCALE IN FEET

SIGNATURE/ BLOCK:

GM2 ASSOCIATES, INC.
115 GLASTONBURY BLVD.
GLASTONBURY, CT 06033

CITY OF BRISTOL

PROJECT NUMBER: 0017-0192
PROJECT DESCRIPTION: REPLACEMENT OF BRIDGE NO. 04487, EAST STREET OVER PEQUABUCK RIVER
TOWN(S): BRISTOL
DRAWING TITLE: ROADWAY PROFILE

DRAWING NO. PRO-01
SHEET NO. 7

LASTED SAVED BY: NBibeau FILE NAME: M:\017_192_East Street_Bristol\330_Design Data\Highways\Contract_Plans\HW_CP_0017_0192_Pro.dgn
PLOTTED DATE: 1/24/2024

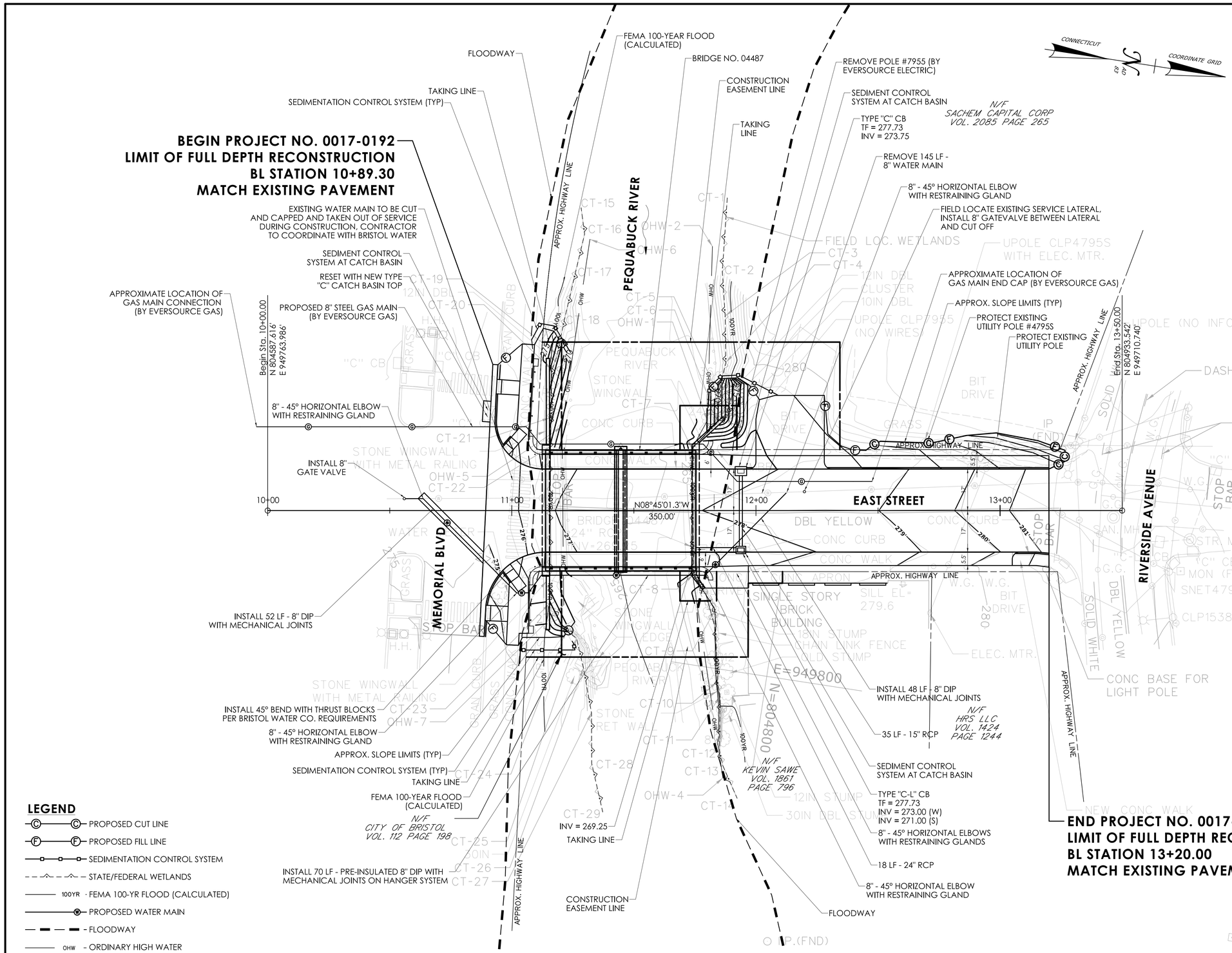

LEGEND

- PROPOSED CUT LINE
- PROPOSED FILL LINE
- SEDIMENTATION CONTROL SYSTEM
- STATE/FEDERAL WETLANDS
- 100YR - FEMA 100-YR FLOOD (CALCULATED)
- PROPOSED WATER MAIN
- FLOODWAY
- OHW - ORDINARY HIGH WATER

WATER MAIN CONSTRUCTION SEQUENCE

1. COORDINATE WITH BRISTOL WATER TO FIELD LOCATE EXISTING GATE VALVES AND LATERALS.
2. PERFORM TEST PIT INVESTIGATIONS TO VERIFY LOCATIONS OF EXISTING WATER MAIN AND GAS MAIN.
3. IF EXISTING GATE VALVES CANNOT BE UTILIZED TO SHUT DOWN WATER MAIN ACROSS BRIDGE, INSTALL NEW GATES AS DIRECTED BY BRISTOL WATER DEPARTMENT.
4. WATER MAIN OVER THE BRIDGE MUST BE SHUT OFF AT BOTH APPROACHES BY BRISTOL WATER DEPT. PRIOR TO DEMOLITION OF EXISTING BRIDGE.
5. DEMOLISH EXISTING BRIDGE AND REMOVE EXISTING WATER MAIN AS SHOWN ON PLANS OR DIRECTED BY ENGINEER, COORDINATE WITH BRISTOL WATER DEPT.
6. CONSTRUCT NEW BRIDGE AND PIER.
7. INSTALL NEW HANGER SYSTEM ON BRIDGE FOR NEW WATER MAIN.
8. INSTALL NEW DIP WATER MAIN THROUGH SLEEVES AND ON HANGER SYSTEM ON DOWNSTREAM SIDE OF BRIDGE.
9. CONNECT NEW DIP WATER MAIN TO EXISTING MAIN AS DIRECTED AND UNDER SUPERVISION OF BRISTOL WATER DEPT.
10. CHLORINATE NEW WATER MAIN AND PROVIDE TESTING OF SAMPLES PROVIDED BY BRISTOL WATER.
11. FOLLOWING SUCCESSFUL TESTING, NEW WATER MAIN SHALL BE PLACED IN SERVICE AT THE DIRECTION OF BRISTOL WATER.

UTILITY NOTES

1. LOCATION OF EXISTING UTILITIES ARE SHOW APPROXIMATE ON THE PLANS. THE CONTRACTOR SHALL VERIFY LOCATION OF UTILITIES IN THE FIELD PRIOR TO ANY WORK.
2. FINAL LOCATION OF ANY VALVES, BENDS, OR APPURTENANCES SHALL BE AT THE DIRECTION OF THE BRISTOL WATER COMPANY, CONTRACTOR TO COORDINATE.
3. PAVEMENT REPAIR, IF REQUIRED, SHALL BE INSTALLED TO CITY OF BRISTOL REQUIREMENTS.
4. THE CONTRACTOR SHALL BE RESPONSIBLE FOR TESTING WATER SAMPLES TAKEN BY BRISTOL WATER REPRESENTATIVE.
5. BRISTOL WATER CO. SHALL BE CONSULTED PRIOR TO ANY WORK AND MUST BE PRESENT FOR FILL CHLORINATION OF OF THE TEMPORARY MAIN. THE MAIN MAY ONLY BE PLACED IN SERVICE FOLLOWING SUCCESSFUL TESTING AND APPROVAL BY BRISTOL WATER.
6. CONTRACTOR SHALL COORDINATE WITH EVERSOURCE GAS FOR INSTALLATION OF NEW 8" GAS MAIN ON WEST FASCIA OF BRIDGE. EVERSOURCE GAS TO PROVIDE HANGERS AND SLEEVES FOR ABUTMENTS.

NOTES:
1. SEE DRAWING NO. TIE-01 FOR BASELINE CURVE DATA.
2. CONTOURS SHOWN AT 1 FT INTERVAL.

DESIGNER/DRAFTER: NAB CHECKED BY: PMB

HORIZONTAL SCALE 1" = 20' (0, 20', 40')

SIGNATURE/BLOCK: GM2 ASSOCIATES, INC. 115 GLASTONBURY BLVD. GLASTONBURY, CT 06033

CITY OF BRISTOL

PROJECT NUMBER: 0017-0192
PROJECT DESCRIPTION: REPLACEMENT OF BRIDGE NO. 04487, EAST STREET OVER PEQUABUCK RIVER
TOWN(S): BRISTOL
DRAWING TITLE: GRADING AND UTILITY PLAN

DRAWING NO. GRA-01
SHEET NO. 8

LASTED SAVED BY: NBibeau FILE NAME: M:\017_192_East Street_Bristol\330_Design Data\Highways\Contract_Plans\HW_CP_0017_0192_GRD.dgn
PLOTTED DATE: 1/24/2024

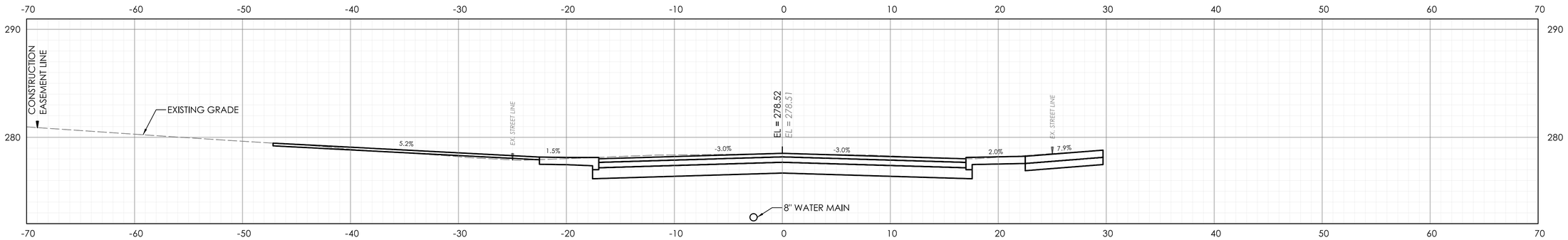

STA.12+25.00

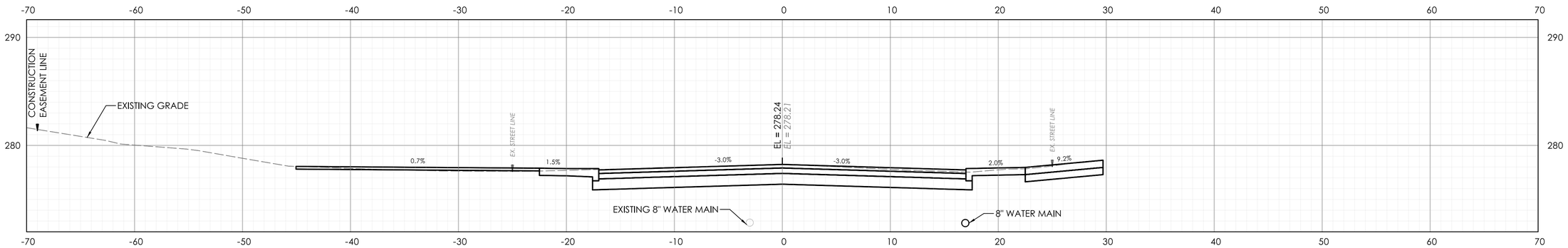

STA.12+00.00

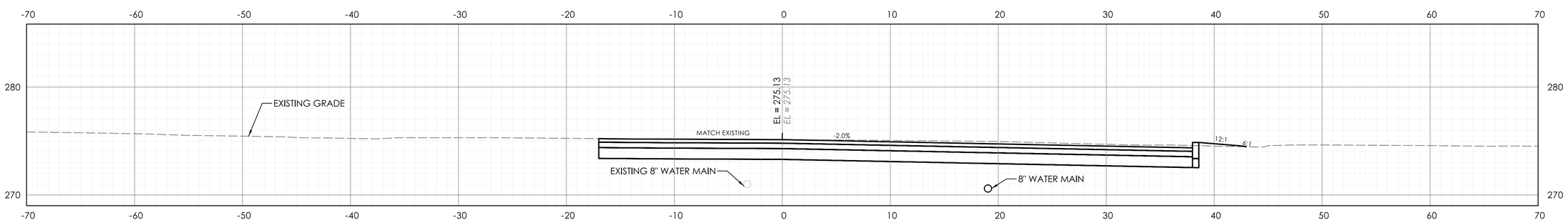

STA.10+89.40

REV.	DATE	REVISION DESCRIPTION

DESIGNER/DRAFTER: NAB CHECKED BY: PMB

HORIZONTAL SCALE 1" = 5' (0, 5', 10')

SIGNATURE/BLOCK: GM2 ASSOCIATES, INC. 115 GLASTONBURY BLVD. GLASTONBURY, CT 06033

CITY OF BRISTOL

PROJECT NUMBER: 0017-0192
PROJECT DESCRIPTION: REPLACEMENT OF BRIDGE NO. 04487, EAST STREET OVER PEQUABUCK RIVER
TOWN(S): BRISTOL
DRAWING TITLE: CROSS SECTIONS - 1

DRAWING NO. XSC-01
SHEET NO. 9

LASTED SAVED BY: NBibeau **FILE NAME:** M:\017_192_East Street_Bristol\330_Design Data\Highways\Contract_Plans\HW_CP_0017_0192_XSC.dgn
PLOTTED DATE: 1/22/2024

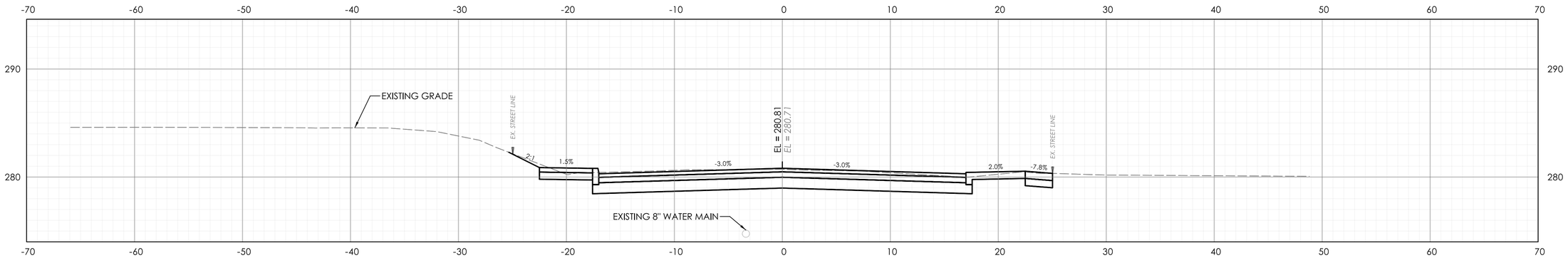

STA.13+00.00

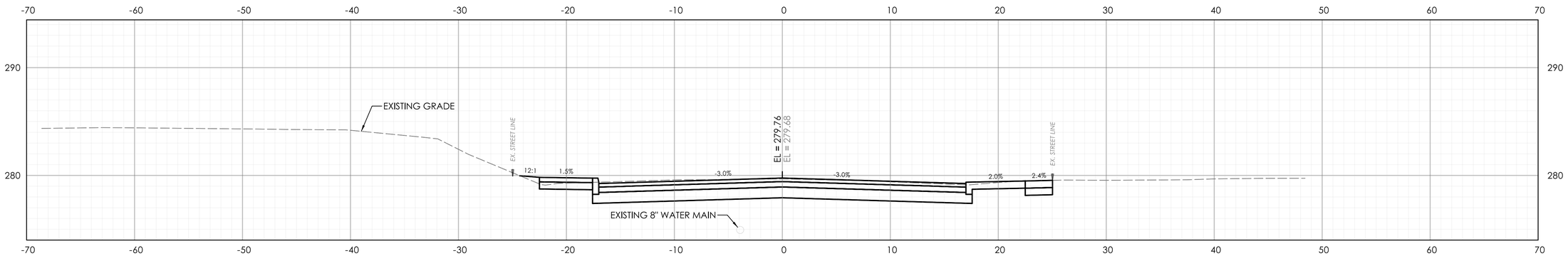

STA.12+75.00

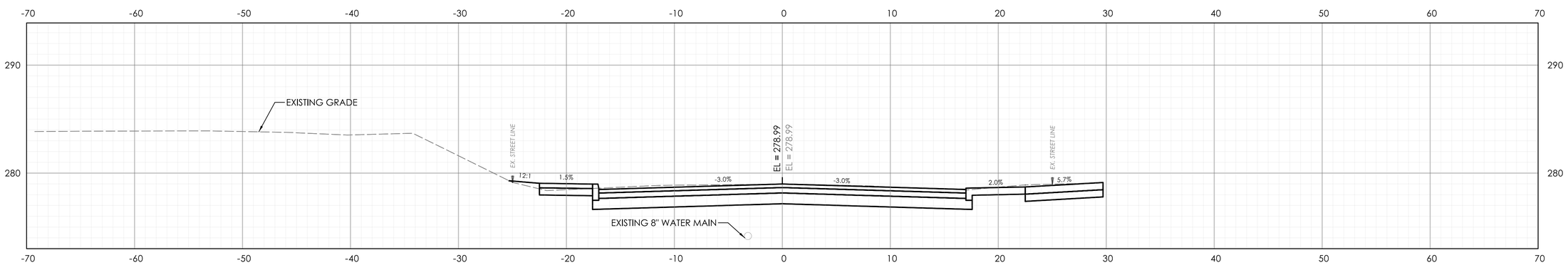

STA.12+50.00

REV.	DATE	REVISION DESCRIPTION

DESIGNER/DRAFTER: NAB CHECKED BY: PMB

HORIZONTAL SCALE 1" = 5' (0, 5', 10')

SIGNATURE/BLOCK: GM2 ASSOCIATES, INC. 115 GLASTONBURY BLVD. GLASTONBURY, CT 06033

CITY OF BRISTOL

PROJECT NUMBER: 0017-0192
PROJECT DESCRIPTION: REPLACEMENT OF BRIDGE NO. 04487, EAST STREET OVER PEQUABUCK RIVER
TOWN(S): BRISTOL
DRAWING TITLE: CROSS SECTIONS - 2

DRAWING NO. XSC-02
SHEET NO. 10

LASTED SAVED BY: NBibeau **FILE NAME:** M:\017_192_East Street_Bristol\330_Design Data\Highways\Contract_Plans\HW_CP_0017_0192_XSC.dgn
PLOTTED DATE: 1/22/2024

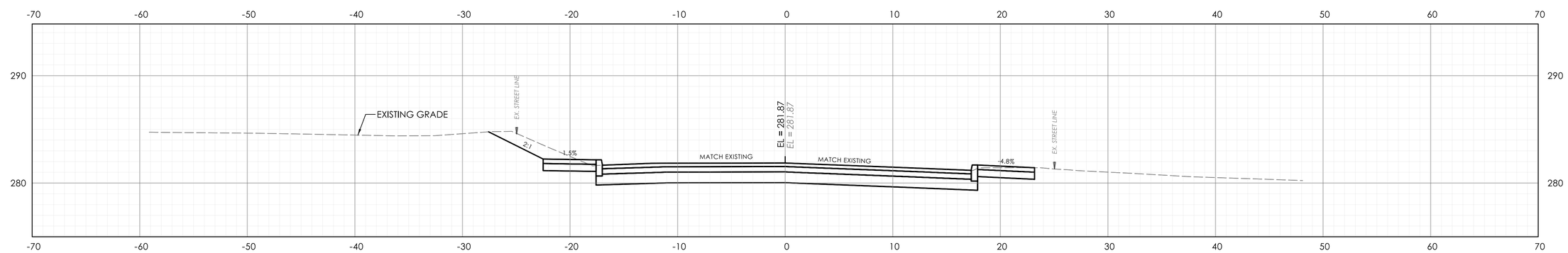

STA.13+20.00

REV.	DATE	REVISION DESCRIPTION

DESIGNER/DRAFTER: NAB CHECKED BY: PMB

0 5' 10'
HORIZONTAL SCALE
1" = 5'

SIGNATURE/ BLOCK:

GM2 ASSOCIATES, INC.
115 GLASTONBURY BLVD.
GLASTONBURY, CT 06033

CITY OF BRISTOL

PROJECT NUMBER: 0017-0192
PROJECT DESCRIPTION: REPLACEMENT OF BRIDGE NO. 04487, EAST STREET OVER PEQUABUCK RIVER
TOWN(S): BRISTOL
DRAWING TITLE: CROSS SECTIONS - 3

DRAWING NO. XSC-03
SHEET NO. 11

LASTED SAVED BY: NBibeau **FILE NAME:** M:\017_192_East Street_Bristol\330_Design Data\Highways\Contract_Plans\HW_CP_0017_0192_XSC.dgn
PLOTTED DATE: 1/22/2024

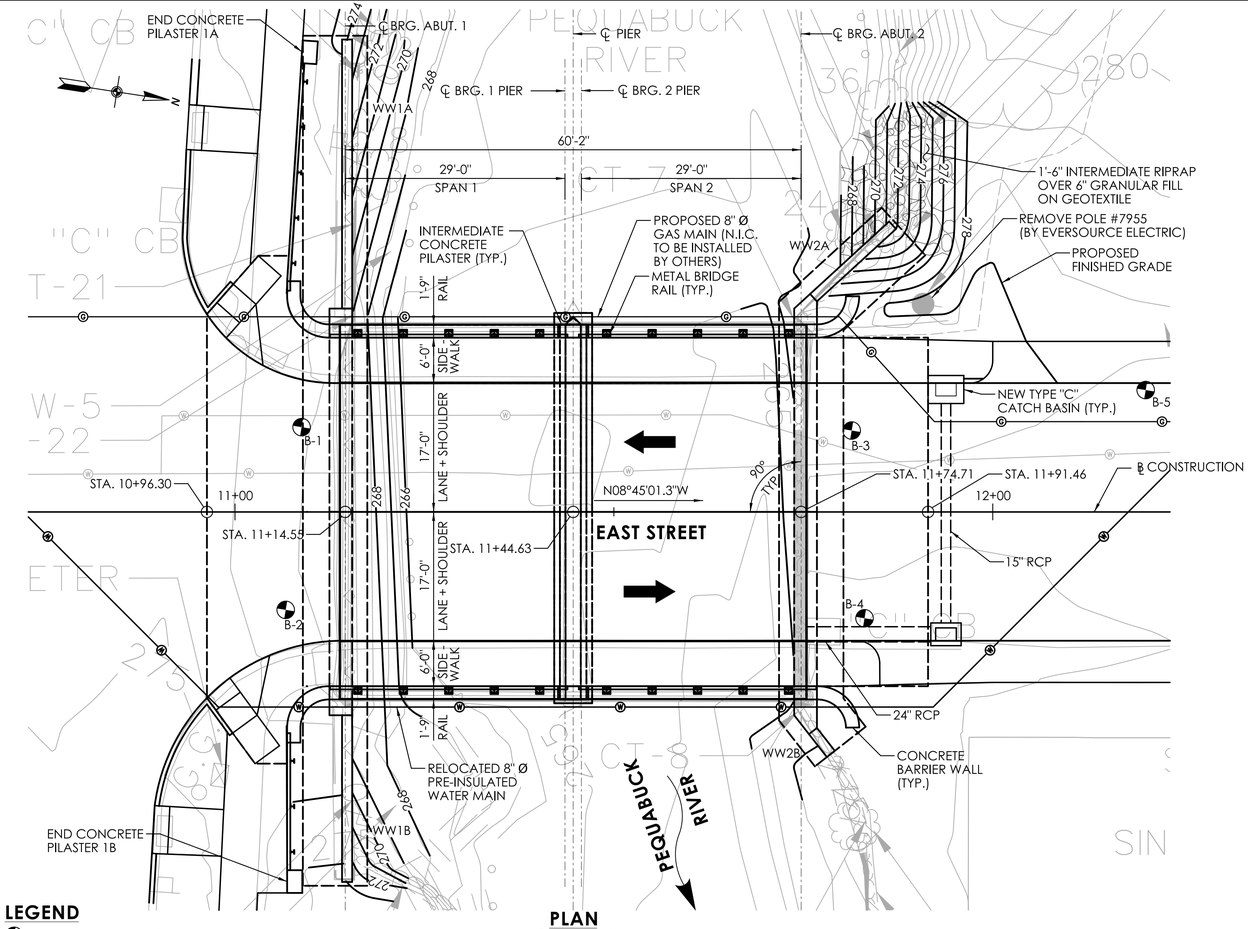

LEGEND

SOIL BORING LOCATION

PLAN

SCALE: 1" = 10'

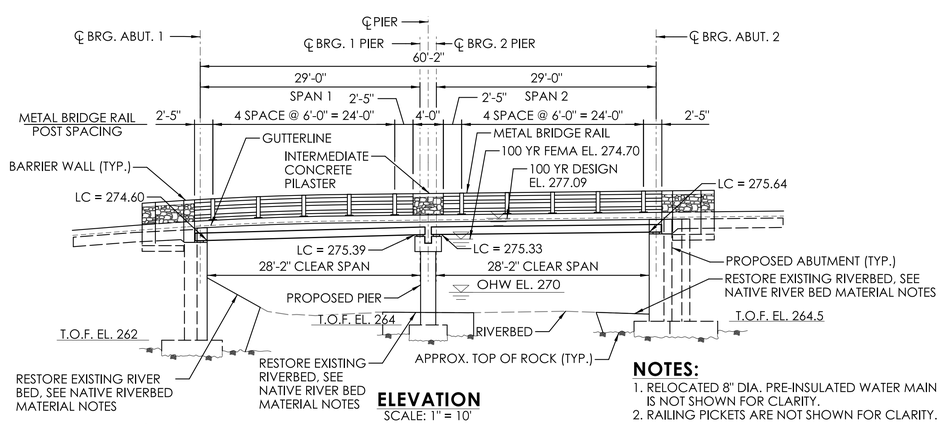

ELEVATION

SCALE: 1" = 10'

NOTES:

1. RELOCATED 8" DIA. PRE-INSULATED WATER MAIN IS NOT SHOWN FOR CLARITY.
2. RAILING PICKETS ARE NOT SHOWN FOR CLARITY.

NATIVE RIVERBED MATERIAL NOTES:

1. NATIVE RIVERBED MATERIAL EXCAVATED DURING PROPOSED ABUTMENTS AND PIER INSTALLATION SHALL BE STOCKPILED AND THEN REPLACED WITHIN DISTURBED AREAS OF RIVERBED TO THE DEPTH SHOWN ON THE PLANS OR AS DIRECTED BY THE ENGINEER IN ACCORDANCE WITH THE SPECIAL PROVISION FOR THE ITEM "REUSE OF EXISTING CHANNEL BOTTOM MATERIAL".
2. ADDITIONAL RIVERBED MATERIAL, IF REQUIRED, SHALL BE IN ACCORDANCE WITH THE SPECIAL PROVISION FOR THE ITEM "REUSE OF EXISTING CHANNEL BOTTOM MATERIAL".
3. THE STOCKPILE SHALL BE LOCATED OUTSIDE THE WETLAND LIMITS AND PROTECTED WITH SEDIMENTATION CONTROL SYSTEM.

GENERAL NOTES:

SPECIFICATIONS: CONNECTICUT DEPARTMENT OF TRANSPORTATION FORM 818 DATED 2020; SUPPLEMENTAL SPECIFICATION DATED JULY 2023 AND SPECIAL PROVISIONS.

DESIGN SPECIFICATIONS: AASHTO LRFD BRIDGE DESIGN SPECIFICATIONS (9TH EDITION - 2020), AS SUPPLEMENTED BY THE CONNECTICUT DEPARTMENT OF TRANSPORTATION BRIDGE DESIGN MANUAL (2003), WITH THE LATEST REVISIONS.

MATERIAL STRENGTHS:
CONCRETE:
CLASS PCC 03340 .....f'c=3,000 psi
CLASS PCC 04460 .....f'c=4,000 psi
CLASS PCC 04462 .....f'c=4,000 psi
PRESTRESSED DECK UNITS .....f'c=8,000 psi

THE CONCRETE STRENGTH, f'c, USED IN DESIGN OF THE CONCRETE COMPONENTS IS NOTED ABOVE. THE COMPRESSIVE STRENGTH OF THE CONCRETE IN THE CONSTRUCTED COMPONENTS SHALL CONFORM TO THE REQUIREMENTS OF 6.01- CONCRETE FOR STRUCTURES AND M.03- PORTLAND CEMENT CONCRETE.

REINFORCEMENT: (ASTM A615 GRADE 60)..... fy = 60,000 PSI

LIVE LOAD: HL-93, LEGAL AND PERMIT VEHICLES.

FUTURE PAVING ALLOWANCE: NONE.

BITUMINOUS CONCRETE OVERLAY: THIS SHALL CONSIST OF TWO LIFTS: THE FIRST (BOTTOM LIFT) SHALL BE "HMA S0.25 TRAFFIC LEVEL 2" (1" THICK) AND THE SECOND (TOP LIFT) SHALL BE "HMA S0.5 TRAFFIC LEVEL 2" (2" THICK) .

FOUNDATION PRESSURES: THE LIMIT STATES NOTED ON THE SUBSTRUCTURE PLAN SHEETS REFER TO LOAD COMBINATIONS AS GIVEN IN THE AASHTO LRFD BRIDGE DESIGN SPECIFICATIONS.

DIMENSIONS: WHEN DECIMAL DIMENSIONS ARE GIVEN LESS THAN THREE DECIMAL PLACES, THE OMITTED DIGITS SHALL BE ASSUMED TO BE ZEROS.

EXISTING DIMENSIONS: DIMENSIONS OF THE EXISTING STRUCTURE SHOWN ON THESE PLANS ARE FOR GENERAL REFERENCE ONLY. THEY HAVE BEEN TAKEN FROM THE LIMITED SURVEY AND ARE NOT GUARANTEED. THE CONTRACTOR SHALL TAKE ALL FIELD MEASUREMENTS NECESSARY TO ASSURE PROPER FIT OF THE FINISHED WORK AND SHALL ASSUME FULL RESPONSIBILITY FOR THEIR ACCURACY. WHEN SHOP DRAWINGS BASED ON FIELD MEASUREMENTS ARE SUBMITTED FOR REVIEW, THE FIELD MEASUREMENTS SHALL ALSO BE SUBMITTED FOR REFERENCE BY THE REVIEWER.

EXISTING BRIDGE: THE WORK FOR REMOVAL OF THE EXISTING SUPERSTRUCTURE SHALL BE INCLUDED AND PAID FOR UNDER THE ITEM "REMOVAL OF SUPERSTRUCTURE". THE WORK FOR REMOVAL OF EXISTING ABUTMENTS, PIER, AND WINGWALLS SHALL BE PAID FOR UNDER ITEM "REMOVAL OF EXISTING MASONRY".

UTILITIES: THE FOLLOWING UTILITIES ARE LOCATED WITHIN THE PROJECT LIMITS AND SHALL BE PROTECTED DURING CONSTRUCTION: 8" Ø PRE-INSULATED WATER MAIN OWNED BY CITY OF BRISTOL WATER AND SEWER DEPARTMENT, AND 8" Ø GAS MAIN AND ELECTRIC DISTRIBUTION UTILITY POLE OWNED BY EVERSOURCE ELECTRIC. THE CONTRACTOR SHALL COORDINATE ALL WORK RELATED TO UTILITY RELOCATION WITH THE RESPECTIVE UTILITY COMPANIES.

BRIDGE IDENTIFICATION PLACARDS: THE CONTRACTOR SHALL PROVIDE AND INSTALL NEW BRIDGE IDENTIFICATION SIGNS AT THE LEADING END OF EACH END BLOCK ON THE TRAFFIC SIDE. THE SIGNS SHALL BE FABRICATED WITH 40 GAUGE ALUMINUM SHEET METAL. THE SIGNS SHALL BE 4" X 12" WITH 3" WHITE RETROREFLECTIVE BLOCK LETTERS ON GREEN RETROREFELCTIVE SHEETING. EACH SIGN SHALL READ 04487. ALL COSTS ASSOCIATED WITH PROVIDING AND INSTALLING THE BRIDGE SIGNS SHALL BE COVERED UNDER ITEM #1208931- SIGN FACE SHEET ALUMINUM (TYPE IX RETROREFLECTIVE SHEETING).THE FINAL LOCATION AND ATTACHMENT METHOD FOR THE SIGNS SHALL BE APPROVED BY THE ENGINEER PRIOR TO ATTACHMENT.

CONCRETE NOTES:

FOR CONCRETE NOTES SEE NEXT SHEET.

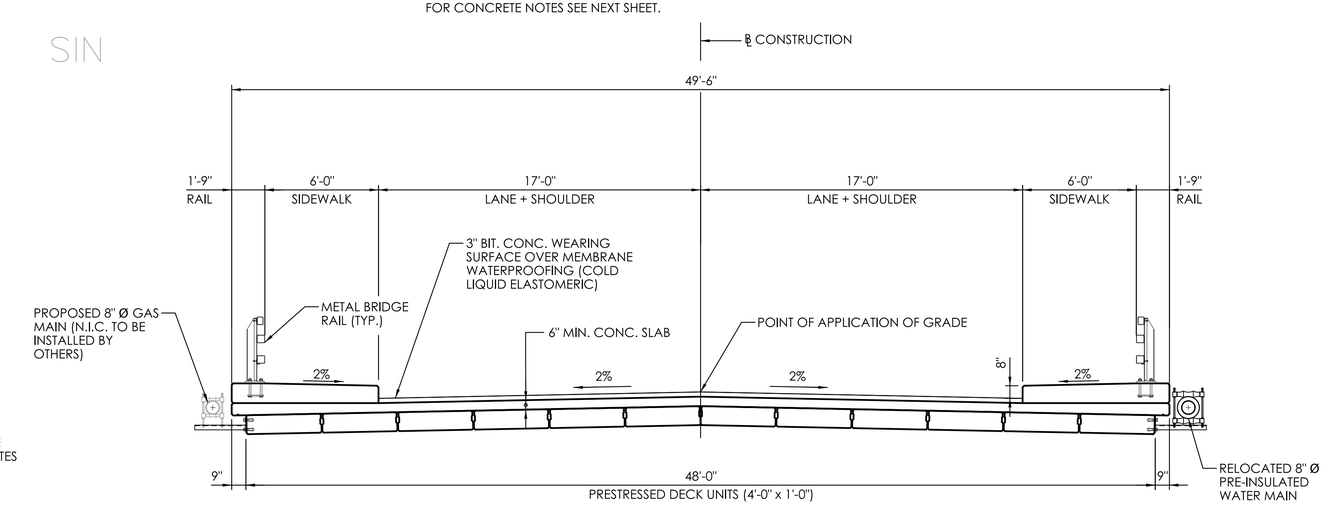

PROPOSED TYPICAL SECTION

SCALE: ¼" = 1'-0"

NOTICE TO BRIDGE INSPECTORS

THE DEPARTMENT'S BRIDGE SAFETY PROCEDURES REQUIRE THIS BRIDGE TO BE INSPECTED FOR, BUT NOT LIMITED TO, ALL APPROPRIATE COMPONENTS INDICATED IN THE GOVERNING MANUAL FOR BRIDGE INSPECTION. ATTENTION MUST BE GIVEN TO INSPECTING THE FOLLOWING SPECIAL COMPONENTS AND DETAILS. (THE LISTING FOR SPECIFIC ATTENTION SHALL NOT BE CONSTRUED TO REDUCE THE IMPORTANCE OF INSPECTION OF ANY OTHER COMPONENT OF THE STRUCTURE). THE FREQUENCY OF INSPECTION OF THIS STRUCTURE SHALL BE IN ACCORDANCE WITH THE GOVERNING MANUALS FOR BRIDGE INSPECTION. UNLESS OTHERWISE DIRECTED BY THE MANAGER OF SAFETY AND EVALUATION.

COMPONENT OR DETAIL	STRUCTURE SHEET REFERENCE
FOLLOW NORMAL INSPECTION PROCEDURES	_____

INSPECTION OF FIELD WELDS

METHOD	UNIT	QUANTITY
ULTRASONIC	IN	0
MAGNETIC PARTICLE	IN	0

CONCRETE DISTRIBUTION

SUPERSTRUCTURE	C.Y.	113
SUBSTRUCTURE	C.Y.	412
FOOTINGS	C.Y.	153
TOTAL	C.Y.	678

REV.	DATE	REVISION DESCRIPTION

DESIGNER/DRAFTER: JS CHECKED BY: VLL

SCALE AS NOTED

SIGNATURE/ BLOCK:

CITY OF BRISTOL

PROJECT NUMBER: 0017-0192
PROJECT DESCRIPTION: REPLACEMENT OF BRIDGE NO. 04487, EAST STREET OVER PEQUABUCK RIVER
TOWN(S): BRISTOL
DRAWING TITLE: GENERAL PLAN, TYPICAL SECTION AND ELEVATION

DRAWING NO. S-01
SHEET NO. 12

LASTED SAVED BY: JShohet FILE NAME: M:\017_192_East Street_Bristol\330_Design Data\Structure_Bridge\Msta_Contract_Sheet_Files\SB_CB_0017_0192_East_Street_04487_GPN.dgn
PLOTTED DATE: 11/6/2023

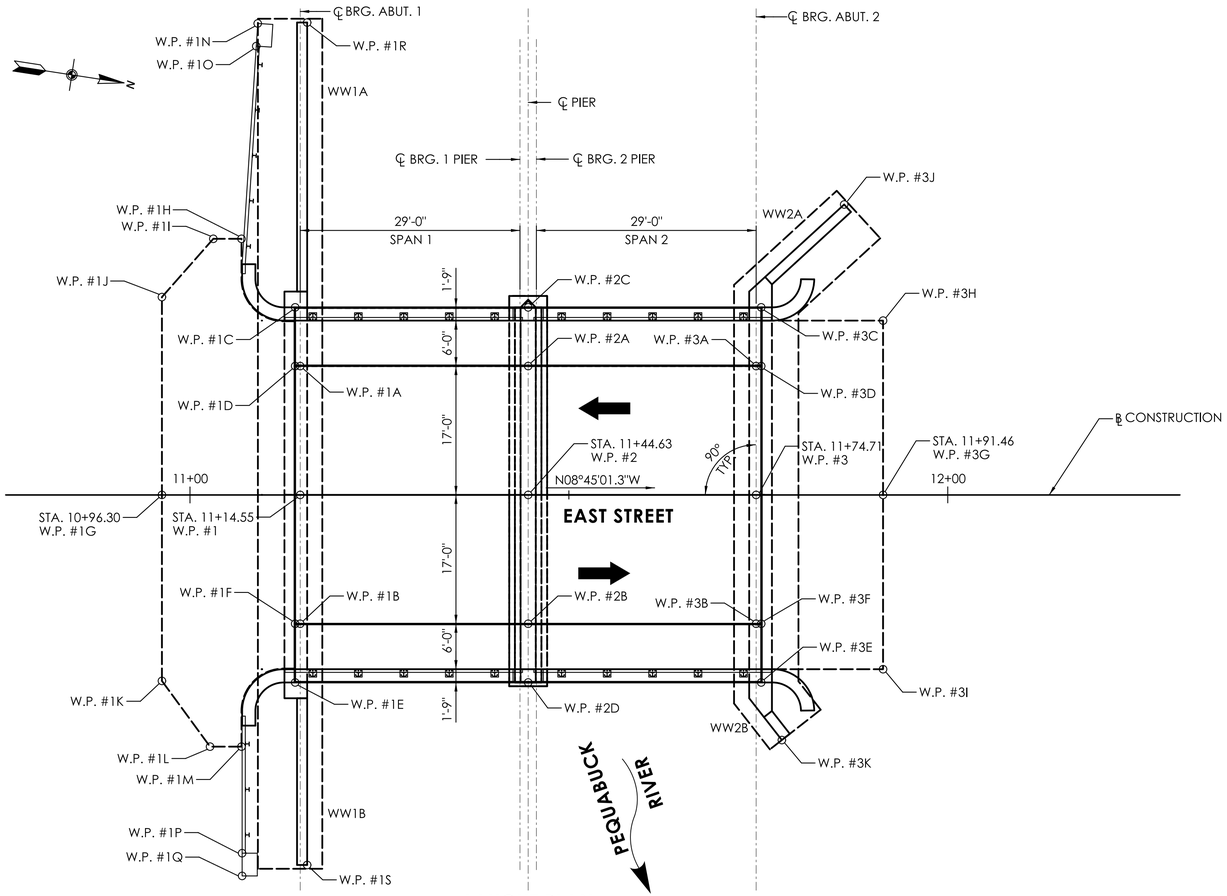

LAYOUT PLAN

SCALE: 1" = 10'

WORKING POINT COORDINATES

W.P. #	NORTH	EAST	DESCRIPTION
1	804700.830	949746.560	℄ BEARINGS AT ABUTMENT 1 AND BASELINE
1A	804698.243	949729.758	℄ BEARINGS AT ABUTMENT 1 AND GUTTERLINE
1B	804703.416	949763.362	℄ BEARINGS AT ABUTMENT 1 AND GUTTERLINE
1C	804696.406	949722.199	BEGIN DECK AT ABUTMENT 1
1D	804697.585	949729.859	BEGIN DECK AT ABUTMENT 1 GUTTERLINE
1E	804703.936	949771.123	BEGIN DECK AT ABUTMENT 1
1F	804702.757	949763.463	BEGIN DECK AT ABUTMENT 1 GUTTERLINE
1G	804682.792	949749.336	APPROACH SLAB BEGIN
1H	804688.029	949714.338	APPROACH SLAB BEGIN
1I	804684.353	949714.904	APPROACH SLAB BEGIN
1J	804678.820	949723.532	APPROACH SLAB BEGIN
1K	804686.525	949773.593	APPROACH SLAB BEGIN
1L	804694.122	949781.199	APPROACH SLAB BEGIN
1M	804698.223	949780.568	APPROACH SLAB BEGIN
1N	804685.822	949685.927	END PILASTER 1A BEGIN
1O	804686.087	949688.915	END PILASTER 1A END
1P	804700.445	949794.453	END PILASTER 1B BEGIN
1Q	804700.901	949797.418	END PILASTER 1B END
1R	804692.253	949684.813	WW1A END
1S	804709.165	949794.685	WW1B END
2	804730.563	949741.983	℄ PIER AT BASELINE
2A	804727.976	949725.181	℄ PIER AT GUTTERLINE
2B	804733.149	949758.785	℄ PIER AT GUTTERLINE
2C	804726.797	949717.521	℄ PIER AT FASCIA
2D	804734.328	949766.445	℄ PIER AT FASCIA
3	804760.296	949737.407	℄ BEARINGS AT ABUTMENT 2 AND BASELINE
3A	804757.710	949720.605	℄ BEARINGS AT ABUTMENT 2 GUTTERLINE
3B	804762.882	949754.209	℄ BEARINGS AT ABUTMENT 2 GUTTERLINE
3C	804757.190	949712.843	END DECK AT ABUTMENT 2
3D	804758.369	949720.503	END DECK AT ABUTMENT 2 AND GUTTERLINE
3E	804764.720	949761.767	END DECK AT ABUTMENT 2
3F	804763.541	949754.107	END DECK AT ABUTMENT 2 AND GUTTERLINE
3G	804776.850	949734.859	APPROACH SLAB END
3H	804773.351	949712.126	APPROACH SLAB END
3I	804780.349	949757.591	APPROACH SLAB END
3J	804765.949	949697.767	WW2A END
3K	804768.571	949768.863	WW2B END

CONCRETE NOTES (CONT'D):

REMAIN IN PLACE FORM: THE USE OF REMAIN-IN-PLACE FORMS ON THIS STRUCTURE IS NOT ALLOWED.

COMPOSITE CONSTRUCTION: NO TEMPORARY INTERMEDIATE SUPPORT SHALL BE USED DURING THE PLACING AND SETTING OF THE CONCRETE DECK SLAB. CONSTRUCTION LOADS AND DEAD LOADS WILL BE PERMITTED WHEN DIRECTED BY THE ENGINEER BUT ONLY WHEN THE CONCRETE HAS REACHED A STRENGTH OF f'c = 3500 PSI. LIVE LOADS (TRAFFIC) WILL BE PERMITTED ON THE STRUCTURE AFTER THE CONCRETE HAS REACHED A STRENGTH OF f'c = 4000 PSI.

THE FOLLOWING PAY ITEMS AND CONCRETE CLASSES ARE REQUIRED FOR CAST-IN-PLACE BRIDGE COMPONENTS.

ITEM	BRIDGE COMPONENT	PCC CLASS
ABUTMENT AND WALL CONCRETE	ABUTMENT AND WINGWALL STEMS, AND CHEEK WALLS	PCC 03340
COLUMN AND CAP CONCRETE	PIER STEM AND PIER CAP	PCC 04460
BRIDGE DECK CONCRETE	BRIDGE DECK	PCC 04462
BRIDGE SIDEWALK CONCRETE	BRIDGE SIDEWALK	PCC 04462
PARAPET CONCRETE	INTERMEDIATE CONCRETE PILASTERS	PCC 04462
BARRIER WALL CONCRETE	BARRIER WALLS AND END PILASTERS (INCLUDES FOOTING STEM AND PARAPET)	PCC 04460
APPROACH SLAB CONCRETE	APPROACH SLAB SIDEWALKS AND APPROACH SLABS	PCC 04460
FOOTING CONCRETE	ABUTMENT AND WINGWALL FOOTINGS	PCC 03340

JOINT SEAL: SEE SPECIAL PROVISIONS.

EXPOSED EDGES: EXPOSED EDGES OF CONCRETE SHALL BE BEVELED 1" X 1" UNLESS DIMENSIONED OTHERWISE.

CONCRETE COVER: ALL REINFORCEMENT SHALL HAVE 2" COVER UNLESS DIMENSIONED OTHERWISE.

REINFORCEMENT: ALL REINFORCEMENT SHALL BE GALVANIZED AFTER FABRICATION UNLESS NOTED OTHERWISE. ALL REINFORCEMENT SHALL CONFORM TO THE REQUIREMENTS OF ASTM A767, CLASS 1, INCLUDING SUPPLEMENTAL REQUIREMENTS. THE COST OF FURNISHING AND PLACING THIS REINFORCEMENT SHALL BE INCLUDED IN THE ITEM "DEFORMED STEEL BARS - GALVANIZED."

PREFORMED EXPANSION JOINT FILLER: THE COST OF FURNISHING AND INSTALLING 1" PREFORMED EXPANSION JOINT FILLER SHALL BE INCLUDED IN THE COST OF THE ITEM "1 INCH PREFORMED EXPANSION JOINT FILLER FOR BRIDGES." THE COST OF FURNISHING AND INSTALLING ½" PREFORMED EXPANSION JOINT FILLER SHALL BE INCLUDED IN THE COST OF THE ITEM "½ INCH PREFORMED EXPANSION JOINT FILLER FOR BRIDGES."

CONSTRUCTION JOINTS: CONSTRUCTION JOINTS, OTHER THAN THOSE SHOWN ON THE PLANS, WILL NOT BE PERMITTED WITHOUT PRIOR APPROVAL OF THE ENGINEER.

PRECAST CONCRETE DECK UNIT SHIPPING DATA

MAX SHIPPING LENGTH	MAX SHIPPING HEIGHT	MAX SHIPPING WIDTH	MAX SHIPPING WEIGHT
30'-4"	1'-0"	4'-0"	18200 LB

HYDRAULIC DATA

DRAINAGE AREA	24.60 SQ. MI.
DESIGN FREQUENCY	100 YEAR
DESIGN DISCHARGE	5850 CFS
AVERAGE DAILY FLOW ELEVATION	267.49 FT.
UPSTREAM DESIGN WATER SURFACE ELEVATION	277.09 FT.
DOWNSTREAM DESIGN WATER SURFACE ELEVATION	273.95 FT.
MAXIMUM SCOUR ELEVATION	262.49FT.
FREQUENCY	200 YEAR
DISCHARGE	7270 CFS
WORST CASE SCOUR SUBSTRUCTURE UNIT	SAME

REV.	DATE	REVISION DESCRIPTION

DESIGNER/DRAFTER: JS CHECKED BY: VLL

SCALE AS NOTED

SIGNATURE/BLOCK: GM2 ASSOCIATES, INC. 115 GLASTONBURY BLVD. GLASTONBURY, CT 06033

CITY OF BRISTOL

PROJECT NUMBER: 0017-0192
PROJECT DESCRIPTION: REPLACEMENT OF BRIDGE NO. 04487, EAST STREET OVER PEQUABUCK RIVER
TOWN(S): BRISTOL
DRAWING TITLE: LAYOUT PLAN

DRAWING NO. S-02
SHEET NO. 13

LASTED SAVED BY: JShohet FILE NAME: M:\017_192_East Street_Bristol\330_Design Data\Structure_Bridge\Msta_Contract_Sheet_Files\SB_CB_0017_0192_East_Street_04487_LYT.dgn
PLOTTED DATE: 10/31/2023

BORING NUMBER B-1

PAGE 1 OF 1

GM2 Associates, Inc.
115 Glastonbury Blvd.
Glastonbury, CT 06033
Telephone: 860-659-1416
Fax: 860-657-2926

CLIENT City of Bristol, CT.
PROJECT NAME Replacement of Bridge No. 04487
PROJECT NUMBER 40398.00
PROJECT LOCATION Bristol, CT.
DATE STARTED 1/11/21 **COMPLETED** 1/11/21
GROUND ELEVATION 276.9 ft **HOLE SIZE** 4" inches
DRILLING CONTRACTOR New England Boring Contractors
GROUND WATER LEVELS:
DRILLING METHOD Bore and wash
AT TIME OF DRILLING ---
LOGGED BY G.Jacobsen **CHECKED BY** L. Dwyer
AT END OF DRILLING 10.00 ft / Elev 266.90 ft Estimated
NOTES
AFTER DRILLING ---

DEPTH (ft)	MATERIAL DESCRIPTION	SAMPLE TYPE NUMBER	RECOVERY % (RQD)	BLOW COUNTS (N VALUE)	POCKET PEN. (tsf)	DRY UNIT WT. (pcf)	SPT N VALUE / PL MC LL / FINES CONTENT (%)
0	4 Inches bituminous concrete						
	POORLY GRADED SAND WITH SILT, (SP-SM) gray to brown, trace gravel (FILL)	SS 1	44	5-19-10 (29)			
	(Augured through boulder from 2.5' to 3.5') (FILL)	AU 1					
5	POORLY GRADED SAND WITH SILT, (SP-SM) reddish brown to brown, trace gravel (FILL)	SS 2	50	4-4-4-4 (8)			
	POORLY GRADED SAND WITH SILT, (SP-SM) brown, with gravel (FILL)	SS 3	58	7-8-12-11 (20)			
10	POORLY GRADED SAND, (SP) brown, trace gravel, trace silt (ALLUVIUM)	SS 4	48	7-4-50-50/3"			>>
	(Rollerbitted through boulder from 11' to 13') (ALLUVIUM)	SS 5	0	70/2"			>>
15	POORLY GRADED SAND, (SP) brown to reddish brown, with gravel (ALLUVIUM)	SS 6	67	40-50/3"			>>
	GNEISS, highly weathered (WEATHERED ROCK)						
20	GNEISS, slightly weathered, thinly foliated, gray, coarse, hard, close fracture spacing, 15° bedding angle, Several vertical, healed cracks	RC 1	83 (78)				

Bottom of borehole at 23.0 feet.

BORING NUMBER B-2

PAGE 1 OF 1

GM2 Associates, Inc.
115 Glastonbury Blvd.
Glastonbury, CT 06033
Telephone: 860-659-1416
Fax: 860-657-2926

CLIENT City of Bristol, CT.
PROJECT NAME Replacement of Bridge No. 04487
PROJECT NUMBER 40398.00
PROJECT LOCATION Bristol, CT.
DATE STARTED 1/7/21 **COMPLETED** 1/7/21
GROUND ELEVATION 276.7 ft **HOLE SIZE** 4" inches
DRILLING CONTRACTOR New England Boring Contractors
GROUND WATER LEVELS:
DRILLING METHOD Bore and wash
AT TIME OF DRILLING 9.00 ft / Elev 267.70 ft Initial
LOGGED BY G.Jacobsen **CHECKED BY** L. Dwyer
AT END OF DRILLING ---
NOTES
AFTER DRILLING ---

DEPTH (ft)	MATERIAL DESCRIPTION	SAMPLE TYPE NUMBER	RECOVERY % (RQD)	BLOW COUNTS (N VALUE)	POCKET PEN. (tsf)	DRY UNIT WT. (pcf)	SPT N VALUE / PL MC LL / FINES CONTENT (%)
0	4 Inches bituminous concrete						
	SILTY SAND, (SM) gray to dark brown, with gravel (FILL)	SS 1	17	10-11-15-9 (26)			
		SS 2	33	6-4-2-4 (6)			
5	POORLY GRADED SAND WITH SILT, (SP-SM) dark brown, with rock fragments (FILL)	SS 3	25	4-9-8-4 (17)			
		SS 4	25	22-18-9-5 (27)			
10	POORLY GRADED SAND WITH SILT, (SP-SM) brown, with gravel (ALLUVIUM)	SS 5	50	10-75			
15	GNEISS, highly weathered, thinly foliated, brown to gray, soft, close fracture spacing, 15° bedding angle, One vertical joint (WEATHERED ROCK)	RC 1	42 (0)				
20	GNEISS, moderately weathered, thinly foliated, brown to gray, medium, hard, close fracture spacing, 15° bedding angle, Several high angle and vertical joints. (BEDROCK)	RC 2	63 (43)				
25	GNEISS, unweathered, thinly foliated, brown to gray, medium, hard, close fracture spacing, 15° bedding angle, Several high angle and vertical joints. (BEDROCK)	RC 3	97 (63)				

Bottom of borehole at 27.0 feet.

BORING NUMBER B-3

PAGE 1 OF 1

GM2 Associates, Inc.
115 Glastonbury Blvd.
Glastonbury, CT 06033
Telephone: 860-659-1416
Fax: 860-657-2926

CLIENT City of Bristol, CT.
PROJECT NAME Replacement of Bridge No. 04487
PROJECT NUMBER 40398.00
PROJECT LOCATION Bristol, CT.
DATE STARTED 1/7/21 **COMPLETED** 1/7/21
GROUND ELEVATION 277.8 ft **HOLE SIZE** 4" inches
DRILLING CONTRACTOR New England Boring Contractors
GROUND WATER LEVELS:
DRILLING METHOD Bore and wash
AT TIME OF DRILLING --- Not Measured
LOGGED BY G.Jacobsen **CHECKED BY** L. Dwyer
AT END OF DRILLING ---
NOTES
AFTER DRILLING ---

DEPTH (ft)	MATERIAL DESCRIPTION	SAMPLE TYPE NUMBER	RECOVERY % (RQD)	BLOW COUNTS (N VALUE)	POCKET PEN. (tsf)	DRY UNIT WT. (pcf)	SPT N VALUE / PL MC LL / FINES CONTENT (%)
0	4 Inches bituminous concrete						
	SILTY SAND, (SM) brown, trace gravel (FILL)						
	SILTY SAND, (SM) brown, trace gravel (FILL)	SS 1	50	18-9-6-4 (15)			
		SS 2	17	5-3-2-2 (5)			
5		SS 3	58	2-3-5-5 (8)			
	POORLY GRADED SAND WITH SILT, (SP-SM) brown, trace gravel, laminated with sandy silt (ALLUVIUM)	SS 4	58	4-5-5-6 (10)			
10	GNEISS, highly weathered, thinly foliated, gray (WEATHERED ROCK)	SS 5	50	20/2"			>>
	GNEISS, slightly weathered, thinly foliated, gray, coarse, very close fracture spacing, 15° bedding angle, Several high angle joints (BEDROCK)	RC 1	88 (80)				
15	GNEISS, unweathered, thinly foliated, gray, coarse, very close fracture spacing, 15° bedding angle, Several high angle joints (BEDROCK)	RC 2	97 (90)				
20							

Bottom of borehole at 21.0 feet.

GEOTECH BH PLOTS - GINT STD US LAB.GDT - 8/28/22 15:07 - T:\PROJECTS\CONNECTICUT\40398 - EAST STREET OVER PEQUABUCK RIVER - BRISTOL\TEST BORINGS AND LABLOGS\EAST STREET OVER PEQUABUCK RIVER.GPJ

DESIGNER/DRAFTER: SD CHECKED BY: VLL

SCALE AS NOTED

SIGNATURE/BLOCK: GM2 ASSOCIATES, INC. 115 GLASTONBURY BLVD. GLASTONBURY, CT 06033

CITY OF BRISTOL

PROJECT NUMBER: 0017-0192
PROJECT DESCRIPTION: REPLACEMENT OF BRIDGE NO. 04487, EAST STREET OVER PEQUABUCK RIVER
TOWN(S): BRISTOL
DRAWING TITLE: BORING LOGS-1

DRAWING NO. S-03
SHEET NO. 14

LASTED SAVED BY: JShohet FILE NAME: M:\017_192_East Street_Bristol\330_Design Data\Structure_Bridge\Msta_Contract_Sheet_Files\SB_CB_0017_0192_East_Street_04487_BOR-1.dgn
PLOTTED DATE: 10/31/2023

GEOTECH BH PLOTS - GINT STD US LAB.GDT - 8/28/22 15:07 - T:\PROJECTS\CONNECTICUT\40398 - EAST STREET OVER PEQUABUCK RIVER - BRISTOL\TEST BORINGS AND LABLOGS\EAST STREET OVER PEQUABUCK RIVER.GPJ

GM2 Associates, Inc.
115 Glastonbury Blvd.
Glastonbury, CT 06033
Telephone: 860-659-1416
Fax: 860-657-2926

BORING NUMBER B-4

CLIENT City of Bristol, CT.
PROJECT NAME Replacement of Bridge No. 04487
PROJECT NUMBER 40398.00
PROJECT LOCATION Bristol, CT.
DATE STARTED 1/8/21 **COMPLETED** 1/8/21
GROUND ELEVATION 278.1 ft **HOLE SIZE** 4" inches
DRILLING CONTRACTOR New England Boring Contractors
GROUND WATER LEVELS:
DRILLING METHOD Bore and wash
AT TIME OF DRILLING 10.00 ft / Elev 268.10 ft Estimated
LOGGED BY G.Jacobsen **CHECKED BY** L. Dwyer
AT END OF DRILLING ---
NOTES
AFTER DRILLING ---

DEPTH (ft)	GRAPHIC LOG	MATERIAL DESCRIPTION	SAMPLE TYPE NUMBER	RECOVERY % (RQD)	BLOW COUNTS (N VALUE)	POCKET PEN. (tsf)	DRY UNIT WT. (pcf)	SPT N VALUE / PL MC LL / FINES CONTENT (%)
0		9.5 Inches bituminous concrete						
		POORLY GRADED SAND WITH SILT, brown to dark brown, little gravel (FILL)	SS 1	58	13-12-20-14 (32)			
		SILTY SAND, brown, with cobbles, and, trace gravel (FILL)	SS 2	50	12-10-12-10 (22)			
5			SS 3	42	5-8-20-30 (28)			
			SS 4	40	2-50/4"			>>
10		SILTY SAND, brown, with cobbles, Rollerbitted/drove casing through several cobbles 9' to 14' (ALLUVIUM)						
15		GNEISS, moderately weathered to slightly weathered, thinly foliated, light gray, coarse, very close to medium fracture spacing, 30° to 60° bedding angle (BEDROCK)	RC 1	100 (40)				

Bottom of borehole at 19.0 feet.

GEOTECH BH PLOTS - GINT STD US LAB.GDT - 8/28/22 15:07 - T:\PROJECTS\CONNECTICUT\40398 - EAST STREET OVER PEQUABUCK RIVER - BRISTOL\TEST BORINGS AND LABLOGS\EAST STREET OVER PEQUABUCK RIVER.GPJ

GM2 Associates, Inc.
115 Glastonbury Blvd.
Glastonbury, CT 06033
Telephone: 860-659-1416
Fax: 860-657-2926

BORING NUMBER B-5

CLIENT City of Bristol, CT.
PROJECT NAME Replacement of Bridge No. 04487
PROJECT NUMBER 40398.00
PROJECT LOCATION Bristol, CT.
DATE STARTED 1/8/21 **COMPLETED** 1/8/21
GROUND ELEVATION 278.2 ft **HOLE SIZE** 4" inches
DRILLING CONTRACTOR New England Boring Contractors
GROUND WATER LEVELS:
DRILLING METHOD Solid Stem Auger
AT TIME OF DRILLING ---
LOGGED BY G.Jacobsen **CHECKED BY** L. Dwyer
AT END OF DRILLING --- Not Encountered
NOTES
AFTER DRILLING ---

DEPTH (ft)	GRAPHIC LOG	MATERIAL DESCRIPTION	SAMPLE TYPE NUMBER	RECOVERY % (RQD)	BLOW COUNTS (N VALUE)	POCKET PEN. (tsf)	DRY UNIT WT. (pcf)	SPT N VALUE / PL MC LL / FINES CONTENT (%)
0		9.5 Inches bituminous concrete						
		SANDY SILT, (ML) brown, fine grained, with gravel (FILL)	SS 1	58	6-7-8-7 (15)			
		SANDY SILT, (ML) brown, fine grained, little gravel (FILL)	SS 2	50	7-8-8-8 (16)			
5		SILTY SAND, (SM) brown to yellowish brown, fine grained (ALLUVIUM)	SS 3	50	5-2-2-2 (4)			
			SS 4	67	50/3"			>>

Refusal at 7.5 feet.
Bottom of borehole at 7.5 feet.

GEOTECH BH PLOTS - GINT STD US LAB.GDT - 8/28/22 15:07 - T:\PROJECTS\CONNECTICUT\40398 - EAST STREET OVER PEQUABUCK RIVER - BRISTOL\TEST BORINGS AND LABLOGS\EAST STREET OVER PEQUABUCK RIVER.GPJ

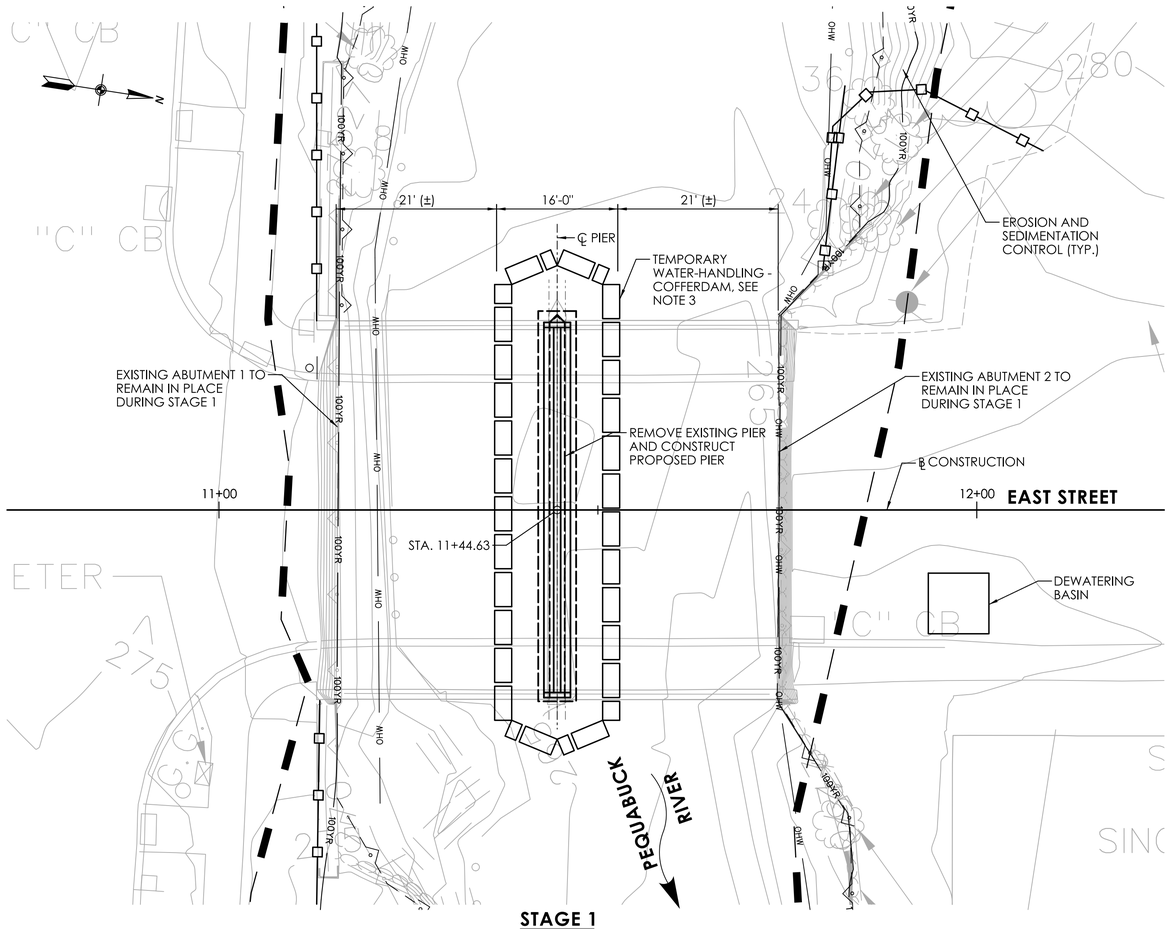

STAGE 1
SCALE: 1"=10'

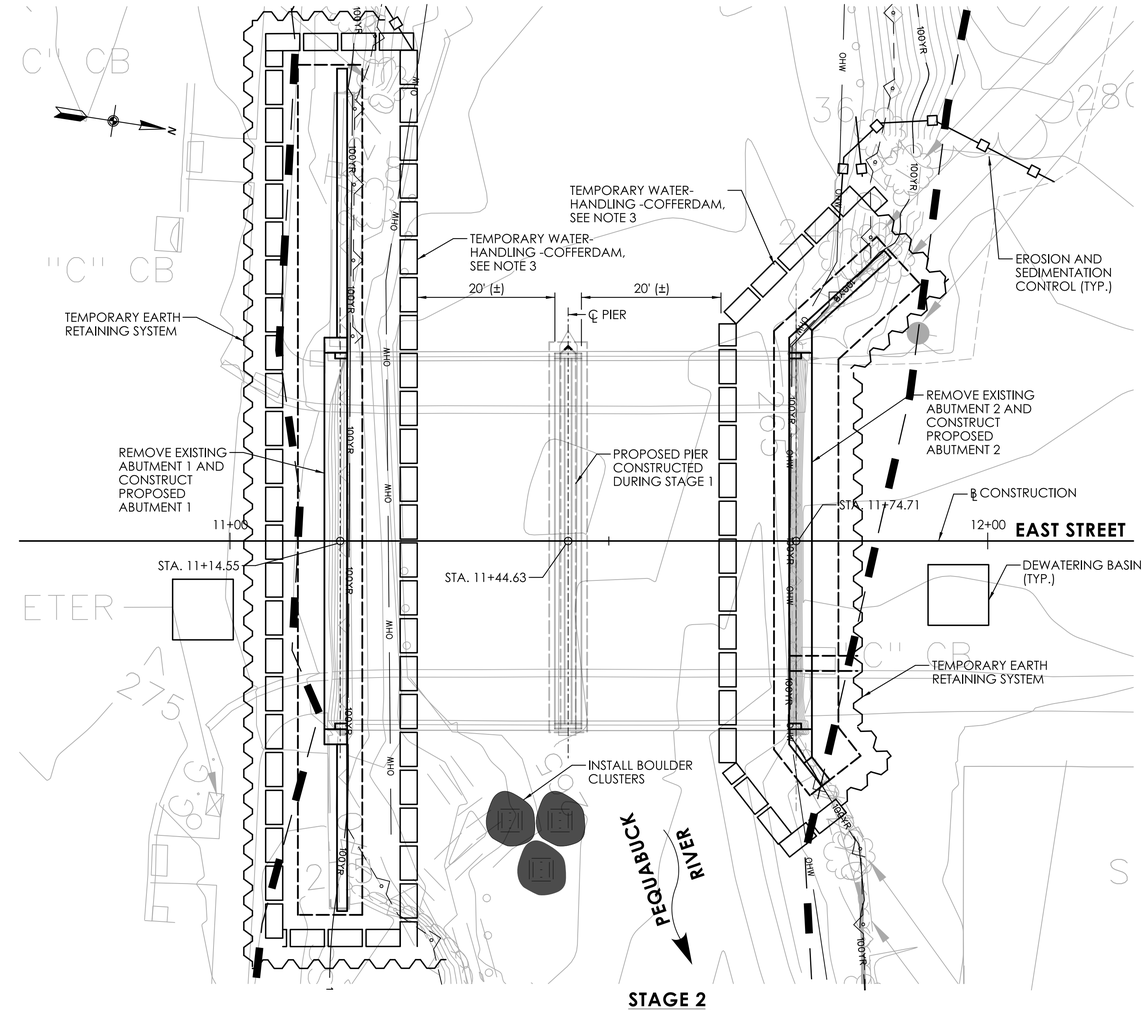

STAGE 2
SCALE: 1"=10'

SUGGESTED SEQUENCE OF CONSTRUCTION

THE FOLLOWING IS THE SUGGESTED SEQUENCE OF CONSTRUCTION THAT MAY BE FOLLOWED. THE CONTRACTOR SHALL SUBMIT HIS SEQUENCE OF CONSTRUCTION TO THE ENGINEER FOR APPROVAL.

PRE-STAGE 1

1. INSTALL DETOUR SIGNS AND PLACE TEMPORARY PRECAST CONCRETE BARRIER CURB, CLOSING EAST STREET TO THROUGH TRAFFIC. PRIOR TO ANY ROAD CLOSURE, THE CONTRACTOR SHALL COORDINATE WITH THE CITY OF BRISTOL. SEE SPECIAL PROVISIONS FOR THE ITEM "MAINTENANCE AND PROTECTION OF TRAFFIC" AND THE DETOUR PLAN FOR ADDITIONAL REQUIREMENTS.
2. CUT OFF AND CAP EXISTING WATER MAIN FOR THE DURATION OF CONSTRUCTION.
3. INSTALL NECESSARY EROSION AND SEDIMENTATION CONTROLS.
4. INSTALL DEBRIS SHIELD ABOVE EL. 272 AND REMOVE EXISTING SUPERSTRUCTURE.
5. REMOVE DEBRIS SHEILD.

STAGE 1

1. INSTALL TEMPORARY WATER HANDLING COFFERDAMS FOR STAGE 1 TO THE LIMITS SHOWN ON THIS PLAN. SEE WATER HANDLING NOTES FOR ADDITIONAL INFORMATION.
2. REMOVE THE EXISTING PIER IN ITS ENTIRETY.
3. CONSTRUCT PROPOSED PIER FOOTING, STEM AND PIER CAP.
4. REMOVE TEMPORARY WATER HANDLING COFFERDAMS FOR STAGE 1.

STAGE 2

1. INSTALL TEMPORARY WATER HANDLING COFFERDAMS FOR STAGE 2 TO THE LIMITS SHOWN ON THIS PLAN. SEE WATER HANDLING NOTES FOR ADDITIONAL INFORMATION.
2. REMOVE THE EXISTING ABUTMENTS AND WINGWALLS IN THEIR ENTIRETY.
3. CONSTRUCT PROPOSED ABUTMENTS AND WINGWALLS FOOTINGS, AND STEMS.
4. BACKFILL PROPOSED BRIDGE AND REMOVE TEMPORARY WATER HANDLING COFFERDAMS FOR STAGE 2.
5. INSTALL BOULDER CLUSTERS.

POST-STAGE 2

1. INSTALL PRESTRESSED CONCRETE DECK UNITS.
2. POUR CONCRETE DECK.
3. CONSTRUCT APPROACH SLABS, SIDEWALKS, PILASTERS AND BARRIER WALLS. INSTALL METAL BRIDGE RAILS.
4. APPLY MEMBRANE WATERPROOFING AND FIRST LIFT OF BITUMINOUS OVERLAY.
5. CONSTRUCT ROADWAY APPROACHES TO THE BRIDGE.
6. APPLY FINAL LIFT OF THE BITUMINOUS OVERLAY TO THE ENTIRE PROJECT.
7. SAW AND SEAL OVERLAY AT THE ENDS OF THE BRIDGE DECK.
8. OPEN ROAD TO TRAFFIC AND PEDESTRIANS AND COMPLETE MISCELLANEOUS WORK.
9. INSTALL PROPOSED WATERMAIN.
10. REMOVE EROSION AND SEDIMENTATION CONTROLS UPON PERMANENT STABILIZATION.

TEMPORARY HYDRAULIC DATA	
AVERAGE DAILY FLOW	43.1 CFS
AVERAGE SPRING FLOW	85.7 CFS
TEMPORARY DESIGN DISCHARGE	984 CFS
TEMPORARY DESIGN FREQUENCY	2 YEAR
STAGE 1	
TEMPORARY WATER SURFACE ELEVATION UPSTREAM	270.44 FT
TEMPORARY WATER SURFACE ELEVATION DOWNSTREAM	267.94 FT
STAGE 2	
TEMPORARY WATER SURFACE ELEVATION UPSTREAM	270.45 FT
TEMPORARY WATER SURFACE ELEVATION DOWNSTREAM	267.74 FT

WATER HANDLING NOTES

1. THE SUGGESTED METHOD OF CONTROLLING WATER DURING CONSTRUCTION CONSISTS OF A TEMPORARY WATER-HANDLING-COFFERDAMS AS SHOWN ON THIS DRAWING AND SHALL BE PAID FOR UNDER THE ITEM "COFFERDAM AND DEWATERING".
2. THIS SUGGESTED WATER HANDLING SCHEME IS FOR THE CONSTRUCTION OF PROPOSED ABUTMENTS, PIER, AND WINGWALLS. THE INSTALLATION OF TEMPORARY WATER-HANDLING-COFFERDAM TO HANDLE WATER FOR ANY OTHER CONSTRUCTION ACTIVITIES IS NOT PERMITTED.
3. TOP OF THE TEMPORARY WATER-HANDLING-COFFERDAM SHALL BE EL. 271.00 (MIN.).
4. THE CONTRACTOR SHALL SUBMIT TO THE ENGINEER FOR REVIEW AND APPROVAL HIS PROPOSED PLAN FOR WATER HANDLING, INCLUDING METHODS NECESSARY FOR THE CONSTRUCTION OF SUBSTRUCTURE TO BE COMPLETED IN REASONABLY DRY CONDITIONS. REFER TO THE SPECIAL PROVISION FOR THE ITEM "COFFERDAM AND DEWATERING".
5. IN ADDITION TO THE PROPOSED METHODS OF HANDLING WATER, THE CONTRACTOR SHALL SUBMIT TO THE ENGINEER HIS PROPOSED METHODS OF REMOVING THE EXISTING SUPERSTRUCTURE AND EXISTING SUBSTRUCTURES. EXISTING SUPERSTRUCTURE REMOVAL SHALL BE PAID FOR UNDER THE ITEM 'REMOVAL OF SUPERSTRUCTURE'. REMOVAL OF EXISTING SUBSTRUCTURES SHALL BE PAID FOR UNDER THE ITEM 'REMOVAL OF EXISTING MASONRY'. SEE SPECIAL PROVISIONS.
6. NO WORK SHALL BEGIN UNTIL ALL APPROVALS HAVE BEEN OBTAINED FROM THE ENGINEER.

TIME-OF-YEAR RESTRICTION

ALL UNCONFINED IN-STREAM WORK IS RESTRICTED TO THE PERIOD FROM JUNE 1ST THROUGH SEPTEMBER 30TH, INCLUSIVE.

LEGEND

- SEDIMENTATION CONTROL SYSTEM
- STATE WETLANDS
- 100YR — FEMA 100-YEAR FLOOD (CALCULATED)
- FLOODWAY
- OHW — ORDINARY HIGH WATER

REV.	DATE	REVISION DESCRIPTION

DESIGNER/DRAFTER: SD CHECKED BY: VLL

SCALE AS NOTED

SIGNATURE/BLOCK: GM2 ASSOCIATES, INC. 115 GLASTONBURY BLVD. GLASTONBURY, CT 06033

CITY OF BRISTOL

PROJECT NUMBER: 0017-0192
PROJECT DESCRIPTION: REPLACEMENT OF BRIDGE NO. 04487, EAST STREET OVER PEQUABUCK RIVER
TOWN(S): BRISTOL
DRAWING TITLE: WATER HANDLING PLAN

DRAWING NO. S-05
SHEET NO. 16

LASTED SAVED BY: JShohet **FILE NAME:** M:\017_192_East Street_Bristol\330_Design Data\Structure_Bridge\Msta_Contract_Sheet_Files\SB_CB_0017_0192_East_Street_04487_WH.dgn
PLOTTED DATE: 10/31/2023

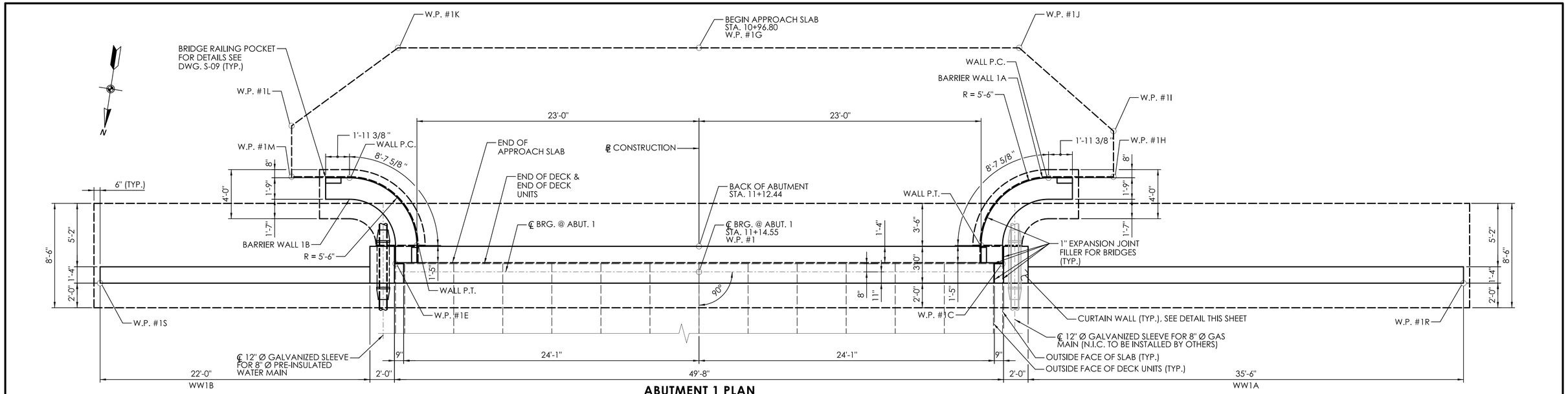

ABUTMENT 1 PLAN

SCALE: ¼" = 1'-0"

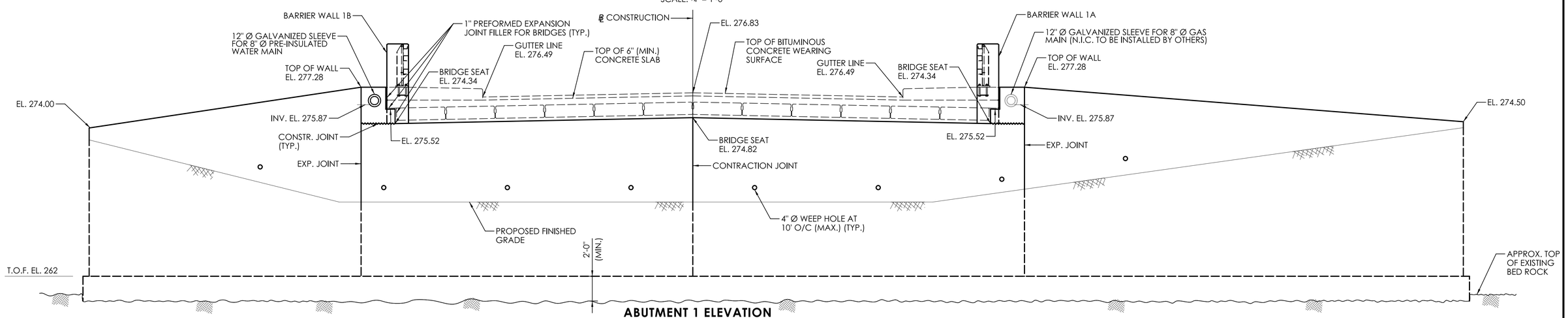

ABUTMENT 1 ELEVATION

SCALE: ¼" = 1'-0"

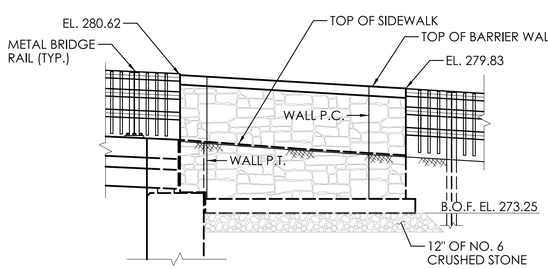

BARRIER WALL 1A ELEVATION

SCALE: ¼" = 1'-0"

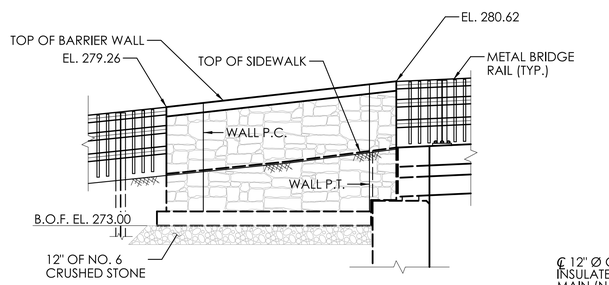

BARRIER WALL 1B ELEVATION

SCALE: ¼" = 1'-0"

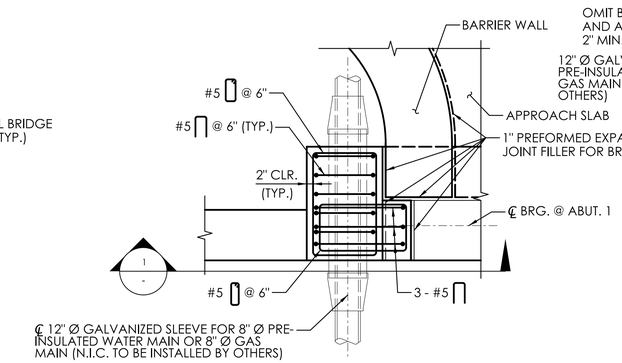

CURTAIN WALL DETAIL AT ABUTMENT 1

SCALE: ½" = 1'-0"

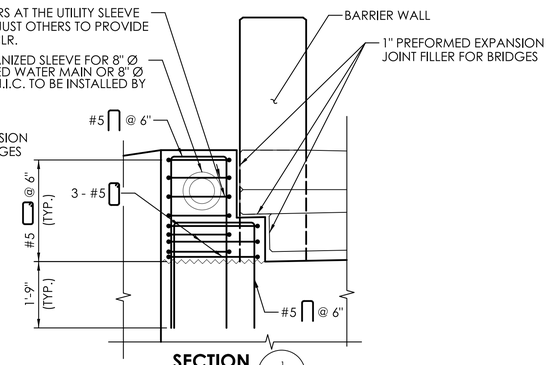

SECTION

SCALE: 1/2"=1'-0"

REV.	DATE	REVISION DESCRIPTION

DESIGNER/DRAFTER: SD CHECKED BY: VLL

SCALE AS NOTED

SIGNATURE/BLOCK: GM2 ASSOCIATES, INC. 115 GLASTONBURY BLVD. GLASTONBURY, CT 06033

CITY OF BRISTOL

PROJECT NUMBER: 0017-0192
PROJECT DESCRIPTION: REPLACEMENT OF BRIDGE NO. 04487, EAST STREET OVER PEQUABUCK RIVER
TOWN(S): BRISTOL
DRAWING TITLE: ABUTMENT 1 PLAN AND ELEVATION

DRAWING NO. S-06
SHEET NO. 17

LASTED SAVED BY: JShoh1 FILE NAME: M:\017_192_East Street_Bristol\330_Design Data\Structure_Bridge\Msta_Contract_Sheet_Files\SB_CB_0017_0192_East_Street_04487_ABUT1.dgn
PLOTTED DATE: 10/31/2023

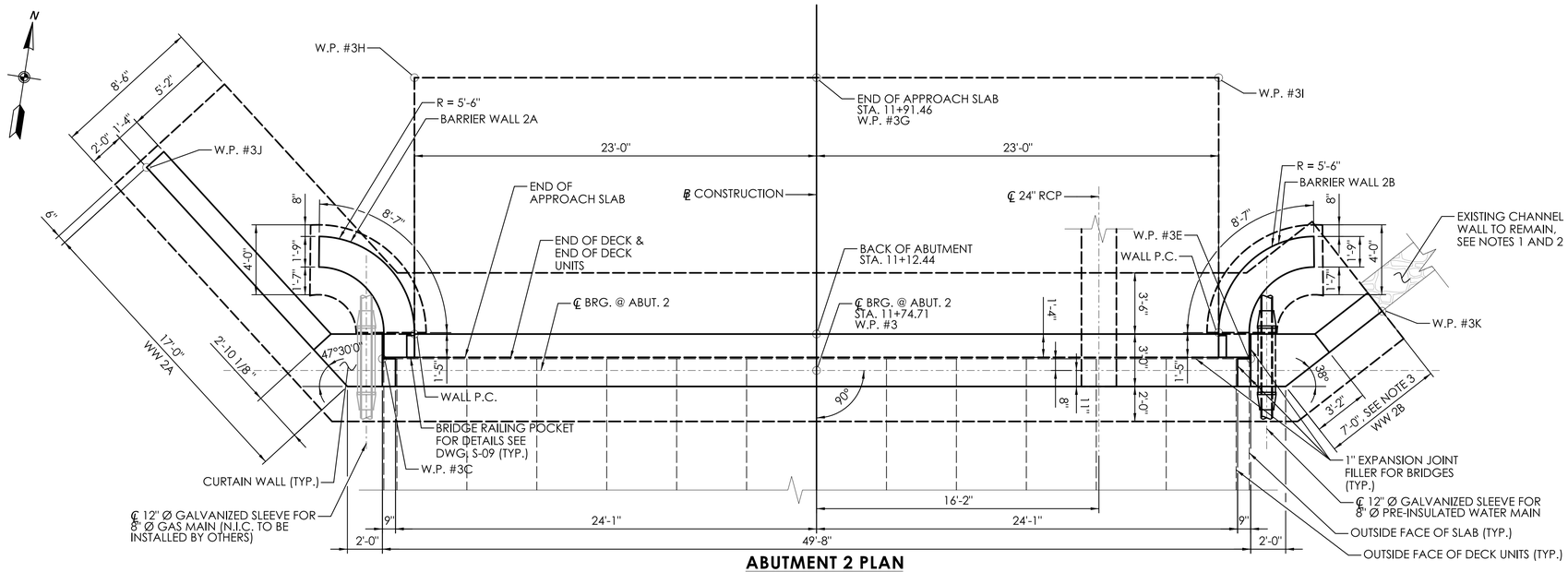

ABUTMENT 2 PLAN

SCALE: ¼" = 1'-0"

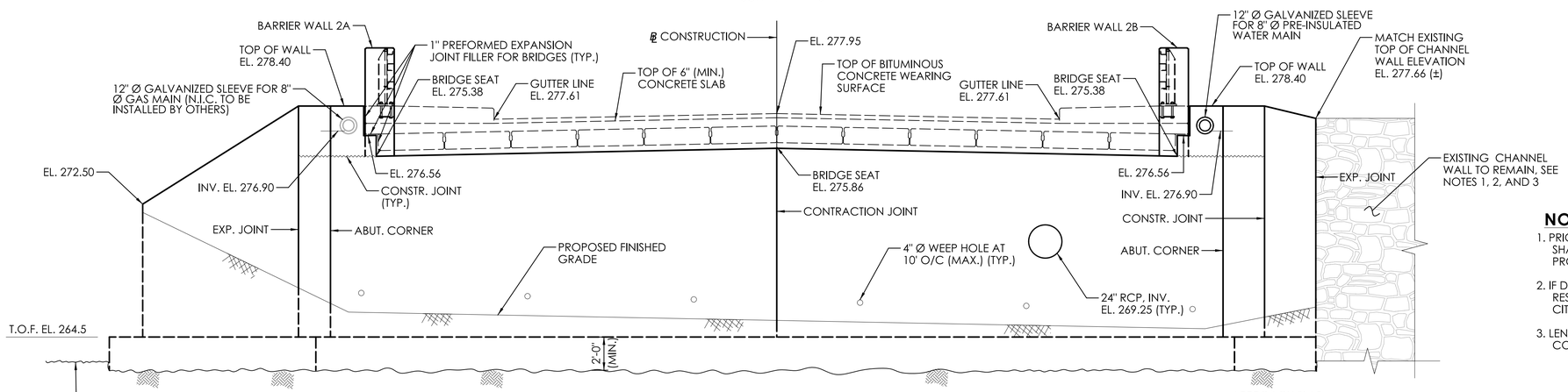

NOTE:
ALL ELEVATIONS SHOWN AREAT THE CENTERLINE OF BEARINGS, UNLESS NOTED OTHERWISE.

ABUTMENT 2 ELEVATION

SCALE: ¼" = 1'-0"

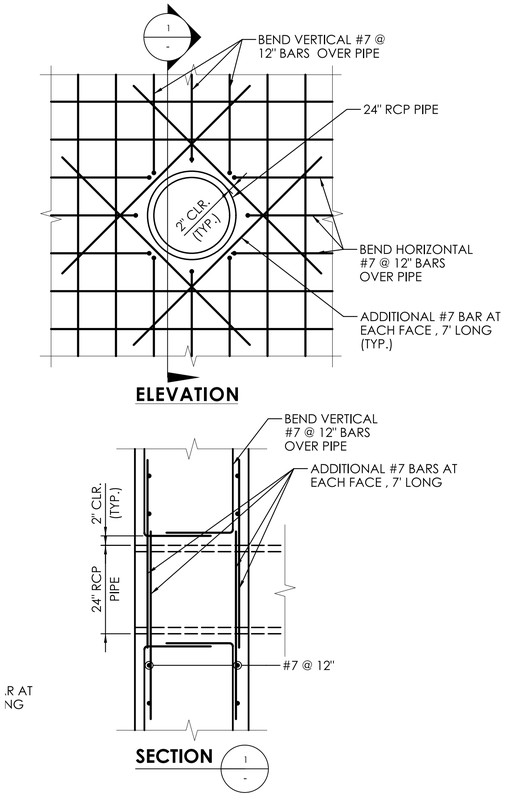

RCP PIPE PENETRATION DETAILS AT ABUTMENT 2

NOT TO SCALE

NOTES:

1. PRIOR TO PLACEMENT OF CONCRETE FOR PROPOSED WINGWLL2 B, 1" THICK CLOSED CELL FOAM SHALL BE ATTACHED WITH ADHESIVE TO REMAINING PORTION OF EXISTING CHANNEL WALL. PROPOSED WINGWALL 2B SHALL NOT COME IN CONTACT WITH EXISTING CHANNEL WALL.
2. IF DURING CONSTRUCTION, EXISTING CHANNEL WALL IS DAMAGED, THE CONTRACTOR IS RESPONSIBLE FOR THE REPAIRS SATISFACTORY TO THE ENGINEER AT NO ADDITIONAL COST TO THE CITY.
3. LENGTH OF THE WALL IS APPROXIMATE AND SHALL BE BASED DETERMINED BASED ON THE FIELD CONDITION.

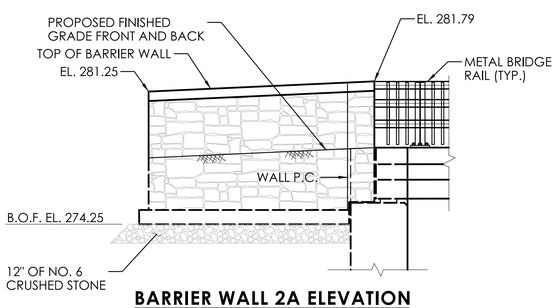

BARRIER WALL 2A ELEVATION

SCALE: ¼" = 1'-0"

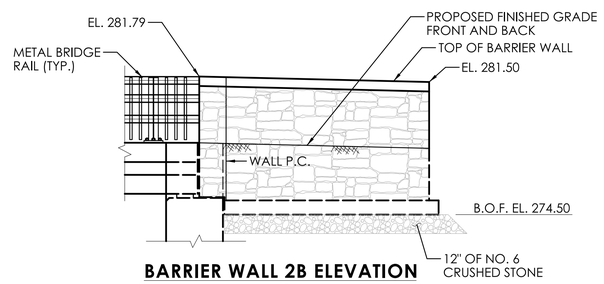

BARRIER WALL 2B ELEVATION

SCALE: ¼" = 1'-0"

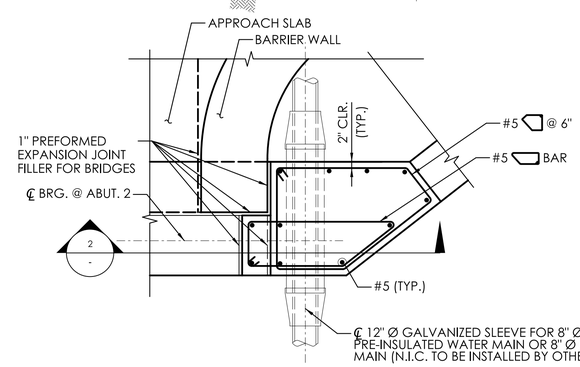

CURTAIN WALL DETAIL AT ABUTMENT 2

SCALE: ½" = 1'-0"

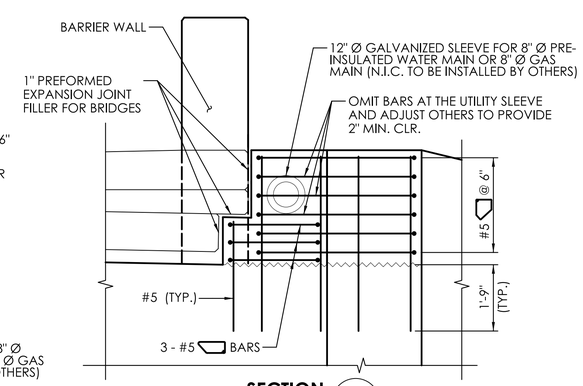

SECTION

SCALE: ½" = 1'-0"

DESIGNER/DRAFTER: SD CHECKED BY: VLL	SCALE AS NOTED	SIGNATURE/ BLOCK: GM2 ASSOCIATES, INC. 115 GLASTONBURY BLVD. GLASTONBURY, CT 06033	CITY OF BRISTOL	PROJECT NUMBER: 0017-0192 PROJECT DESCRIPTION: REPLACEMENT OF BRIDGE NO. 04487, EAST STREET OVER PEQUABUCK RIVER TOWN(S): BRISTOL DRAWING TITLE: ABUTMENT 2 PLAN AND ELEVATION	DRAWING NO. S-07 SHEET NO. 18

LASTED SAVED BY: SDahal **FILE NAME:** M:\017_192_East Street_Bristol\330_Design Data\Structure_Bridge\Msta_Contract_Sheet_Files\SB_CB_0017_0192_East_Street_04487_ABUT2.dgn
PLOTTED DATE: 10/31/2023

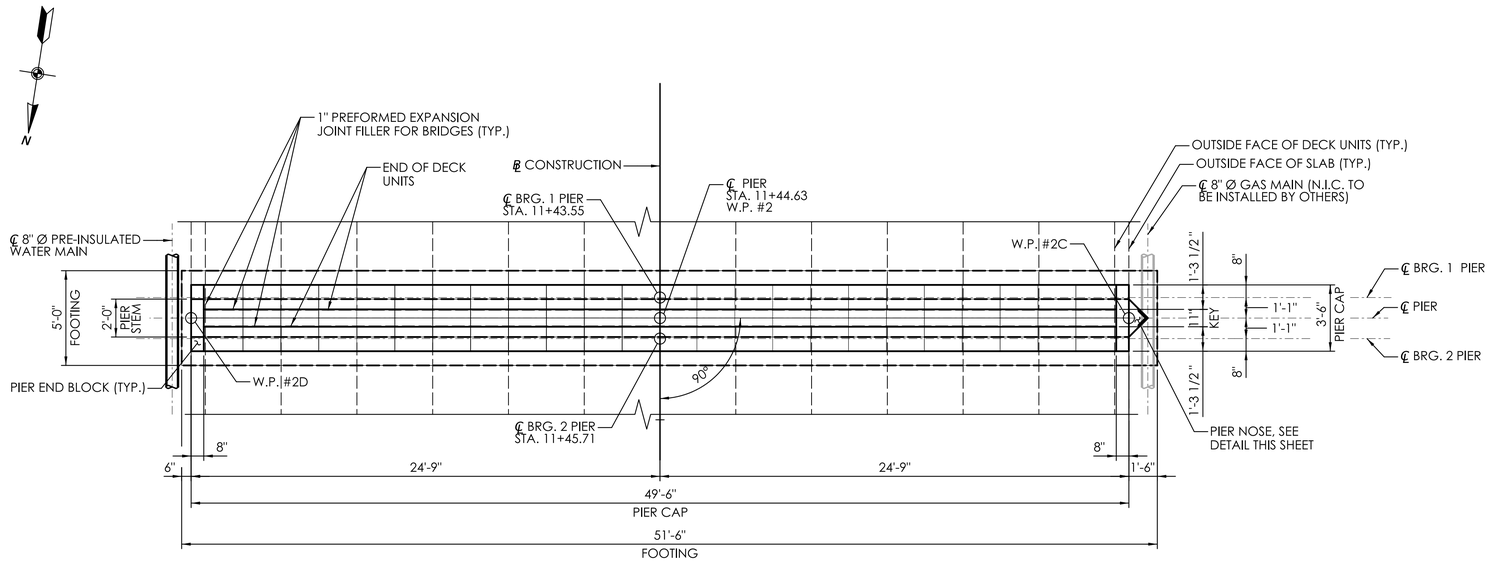

PIER PLAN

SCALE: 1/4" = 1'-0"

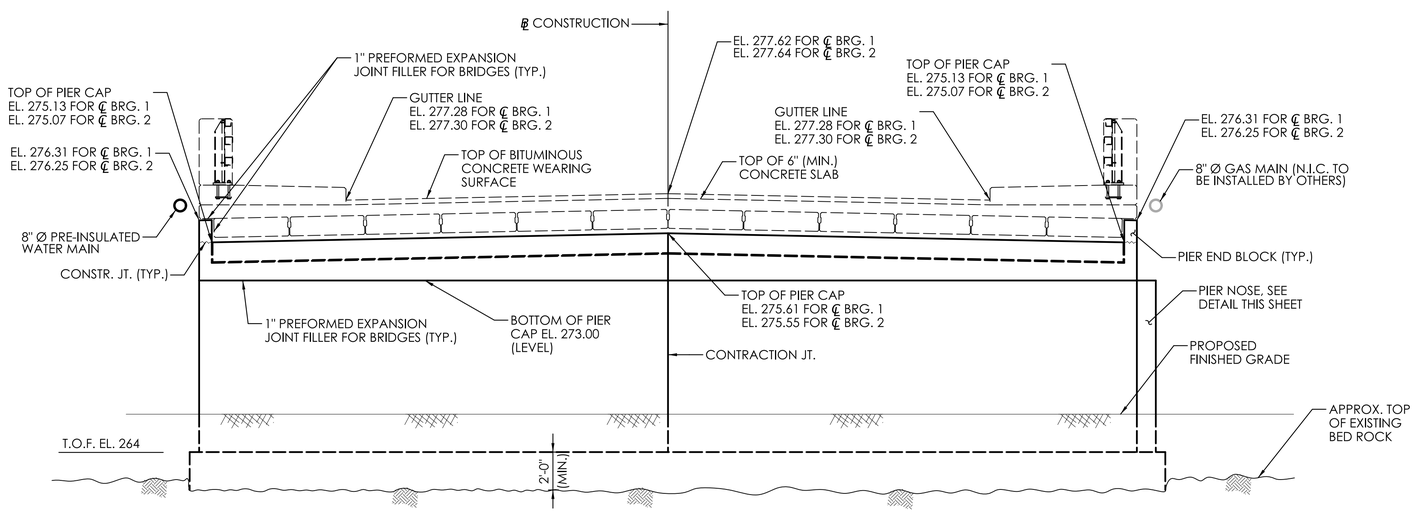

PIER NORTH ELEVATION

SCALE: 1/4" = 1'-0"

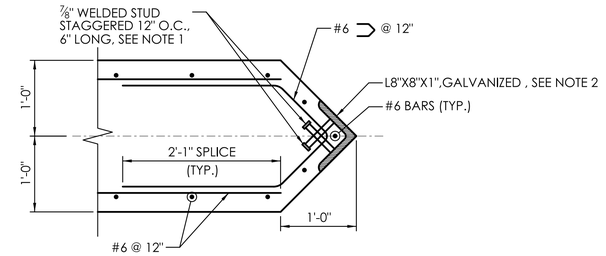

PIER NOSE DETAIL

SCALE: 1" = 1'-0"

NOTES:

1. 7/8" DIA, X 6" WELDED STUD SHALL BE PAID FOR UNDER ITEM "WELDED STUDS".
2. GALVANIZED L8x8x1" ANGLE SHALL BE PAID FOR UNDER ITEM "STRUCTURAL STEEL".

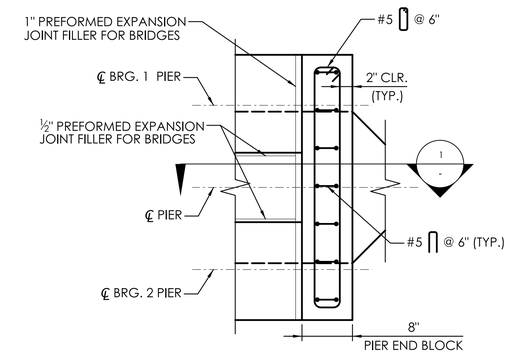

PIER END BLOCK DETAIL

SCALE: 1" = 1'-0"

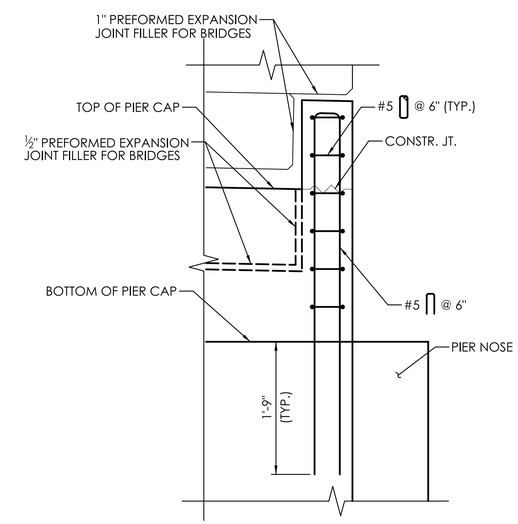

SECTION 1 / -

SCALE: 1"=1'-0"

DESIGNER/DRAFTER: JS CHECKED BY: VLL	SCALE AS NOTED	SIGNATURE/ BLOCK: GM2 ASSOCIATES, INC. 115 GLASTONBURY BLVD. GLASTONBURY, CT 06033	CITY OF BRISTOL	PROJECT NUMBER: 0017-0192 PROJECT DESCRIPTION: REPLACEMENT OF BRIDGE NO. 04487, EAST STREET OVER PEQUABUCK RIVER TOWN(S): BRISTOL DRAWING TITLE: PIER PLAN AND ELEVATION	DRAWING NO. S-08 SHEET NO. 19

LASTED SAVED BY: SDahal **FILE NAME:** M:\017_192_East Street_Bristol\330_Design Data\Structure_Bridge\Msta_Contract_Sheet_Files\SB_CB_0017_0192_East_Street_04487_PIER.dgn
PLOTTED DATE: 10/31/2023

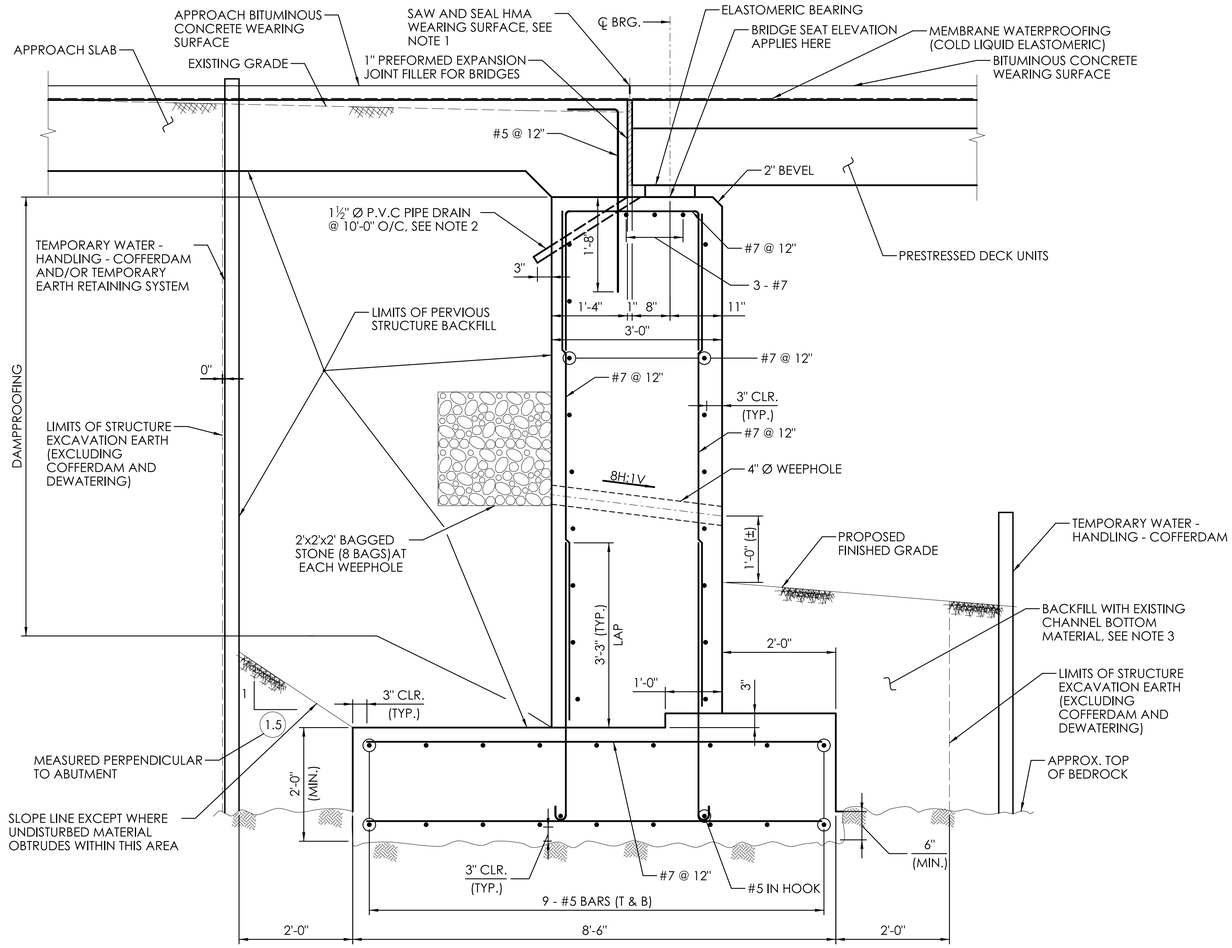

THE MAXIMUM DESIGN FOUNDATION PRESSURE FOR LIMIT STATE STR-1 IS 4.62 TSF, AND FOR LIMIT STATE SER-1 IS 3.29 TSF.

TYPICAL ABUTMENT SECTION

SCALE: ¾" = 1'-0"

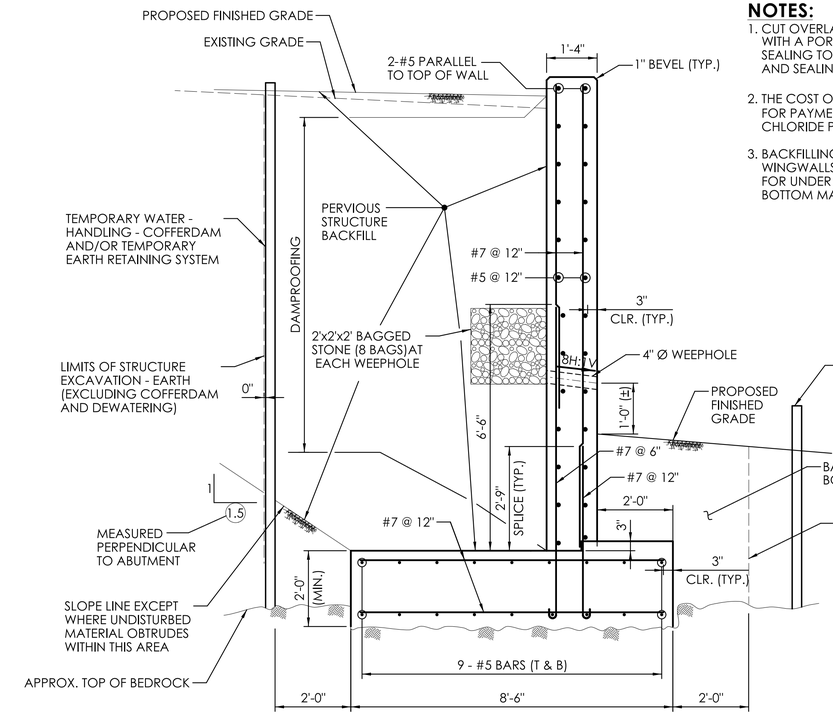

THE MAXIMUM DESIGN FOUNDATION PRESSURE FOR LIMIT STATE STR-1 IS 2.93 TSF, AND FOR LIMIT STATE SER-1 IS 2.02 TSF.

TYPICAL WINGWALL SECTION

SCALE: ½" = 1'-0"

NOTES:

1. CUT OVERLAY WITH A ⅜" x 1¾" DEEP KERF AND FILL WITH A PORTABLE SEALANT. COST OF CUTTING AND SEALING TO BE PAID FOR UNDER THE ITEM "SAWING AND SEALING JOINTS".
2. THE COST OF 1½" DIA. PVC PIPE SHALL BE INCLUDED FOR PAYMENT UNDER THE ITEM "1-½" POLYVINYL CHLORIDE PLASTIC PIPE".
3. BACKFILLING IN FRONT OF ABUTMENTS, WINGWALLS AND AROUND THE PIER SHALL BE PAID FOR UNDER ITEM " REUSE OF EXISTING CHANNEL BOTTOM MATERIAL".

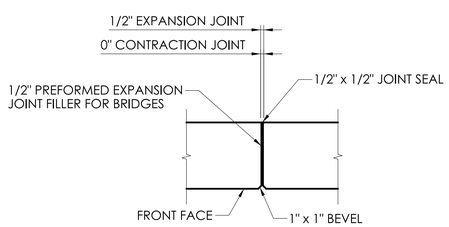

ABUTMENT/WINGWALL VERTICAL STEM JOINT DETAIL

N.T.S.

JOINT NOTES:

1. NO REINFORCEMENT SHALL PASS THROUGH EXPANSION OR CONTRACTION JOINTS. REINFORCEMENTS SHALL PASS THROUGH CONSTRUCTION JOINTS.
2. JOINT SEAL TO EXTEND FROM TOP OF FOOTING TO TOP OF STEM AND HORIZONTALLY ALONG TOP OF ABUTMENT/WINGWALL STEM.
3. REINFORCING TO HAVE 2" COVER EXCEPT WHERE SHOWN OTHERWISE.

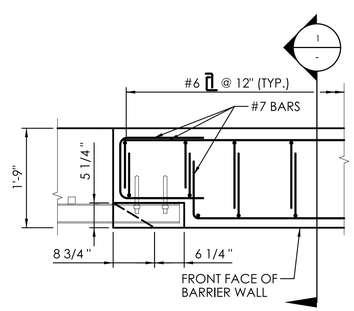

PLAN

NOTE:

FOR RAIL ATTACHMENT DETAILS SEE DWG. S-15.

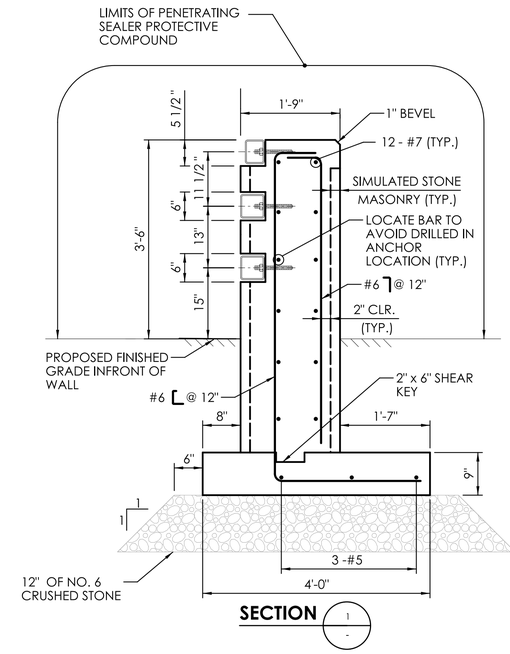

SECTION

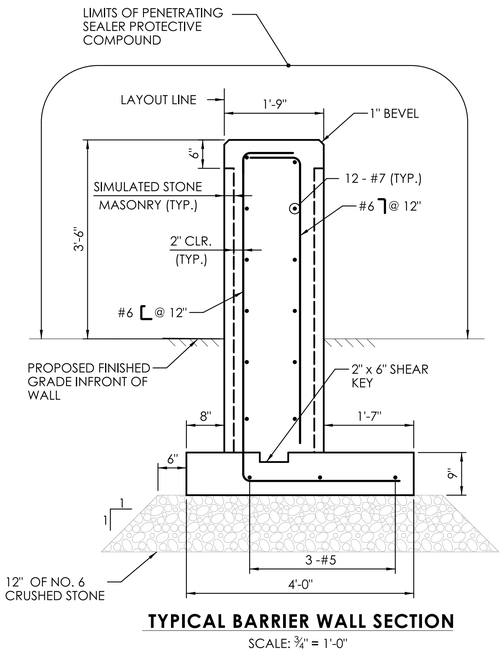

TYPICAL BARRIER WALL SECTION

SCALE: ¾" = 1'-0"

BRIDGE RAILING POCKET IN BARRIER WALL DETAILS

SCALE: ¾" = 1'-0"

DESIGNER/DRAFTER: SD CHECKED BY: VLL	SCALE AS NOTED	SIGNATURE/ BLOCK: GM2 ASSOCIATES, INC. 115 GLASTONBURY BLVD. GLASTONBURY, CT 06033	CITY OF BRISTOL	PROJECT NUMBER: 0017-0192 PROJECT DESCRIPTION: REPLACEMENT OF BRIDGE NO. 04487, EAST STREET OVER PEQUABUCK RIVER TOWN(S): BRISTOL DRAWING TITLE: SUBSTRUCTURE DETAILS - 1	DRAWING NO. S-09 SHEET NO. 20

LASTED SAVED BY: SDahal **FILE NAME:** M:\017_192_East Street_Bristol\330_Design Data\Structure_Bridge\Msta_Contract_Sheet_Files\SB_CB_0017_0192_East_Street_04487_ABUTMENT_DETAILS.dgn
PLOTTED DATE: 10/31/2023

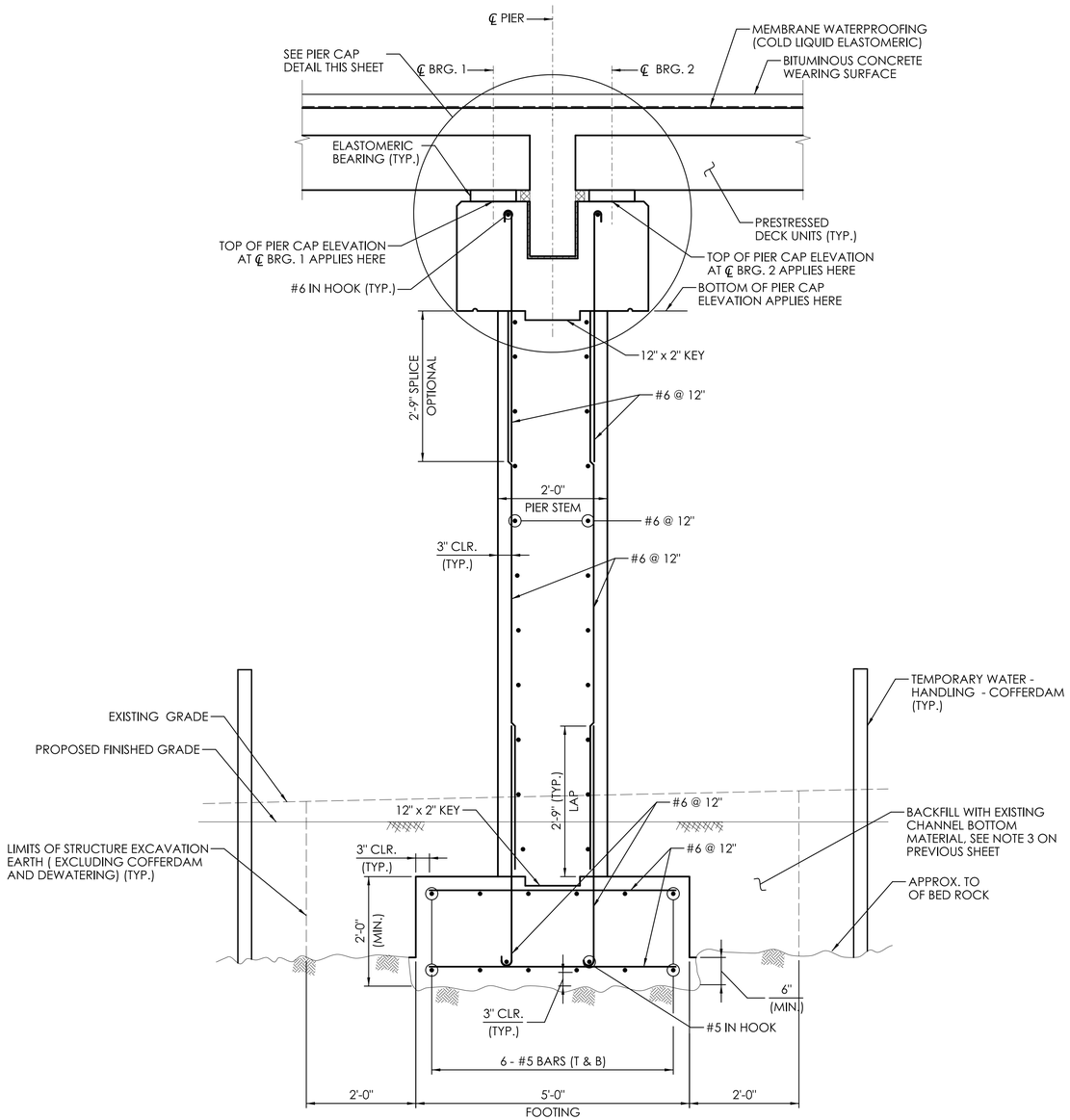

THE MAXIMUM DESIGN FOUNDATION PRESSURE FOR LIMIT STATE STR-1 IS 3.42 TSF, AND FOR LIMIT STATE SER-1 IS 2.46 TSF.

TYPICAL PIER SECTION

SCALE: ¾" = 1'-0"

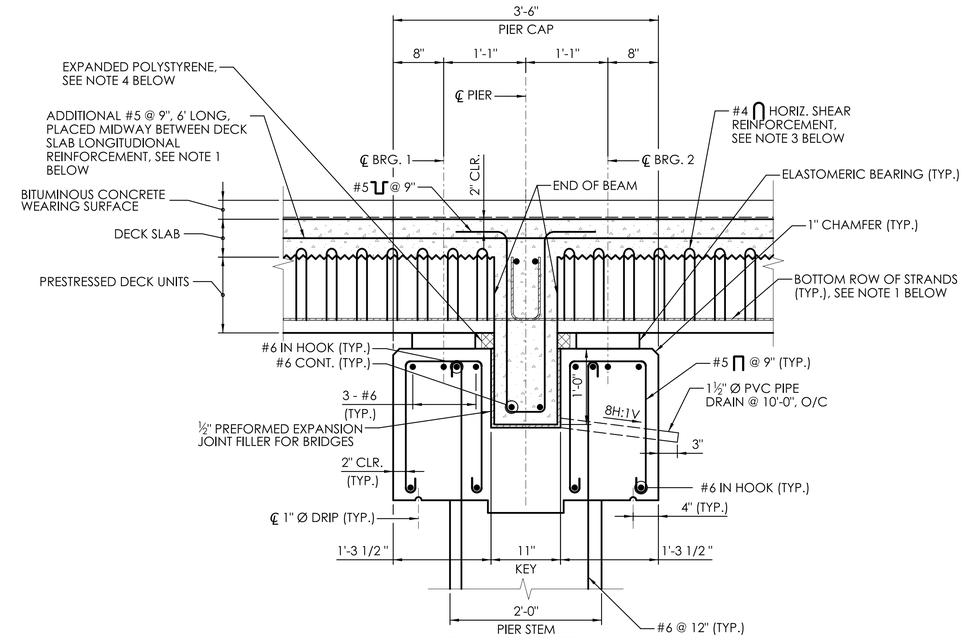

PIER CAP DETAIL

SCALE: 1" = 1'-0"

NOTES:

1. DECK SLAB REINFORCEMENT, PRESTRESSED DECK UNIT REINFORCEMENT AND THE REMAINDER OF STRANDS IN PRESTRESSED DECK UNITS NOT SHOWN FOR CLARITY.
2. DENOTES THE LIMITS OF BRIDGE DECK CONCRETE.
3. FOR BEAM REINFORCEMENT, SEE BEAM ELEVATION ON DWG. S-12.
4. PLACE EXPANDED POLYSTYRENE FILLER UNDER THE DECK UNIT AT THE EDGE OF THE KEY. THE COST OF FURNISHING AND PLACING EXPANDED POLYSTYRENE IS INCLUDED IN ITEM "COLUMN AND CAP CONCRETE".

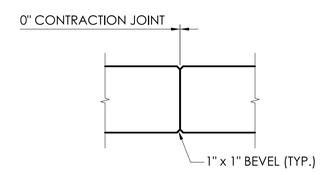

PIER VERTICAL JOINT DETAIL

N.T.S.

JOINT NOTES:

1. NO REINFORCEMENT SHALL PASS THROUGH PIER JOINT.
2. REINFORCING TO HAVE 2" COVER EXCEPT WHERE SHOWN OTHERWISE.

NOTES:

1. FOR DETAILS AND NOTES OF PRESTRESSED DECK UNITS, SEE NEXT SHEET.
2. LOCATION AND DETAILS OF LIFTING HOOKS SHALL BE SUBMITTED TO THE ENGINEER FOR APPROVAL. ALL LIFTING HOOKS SHALL BE ENGAGED DURING LIFTING.
3. DURING HANDLING, DECK UNITS MUST BE MAINTAINED IN AN UPRIGHT POSITION AT ALL TIMES.

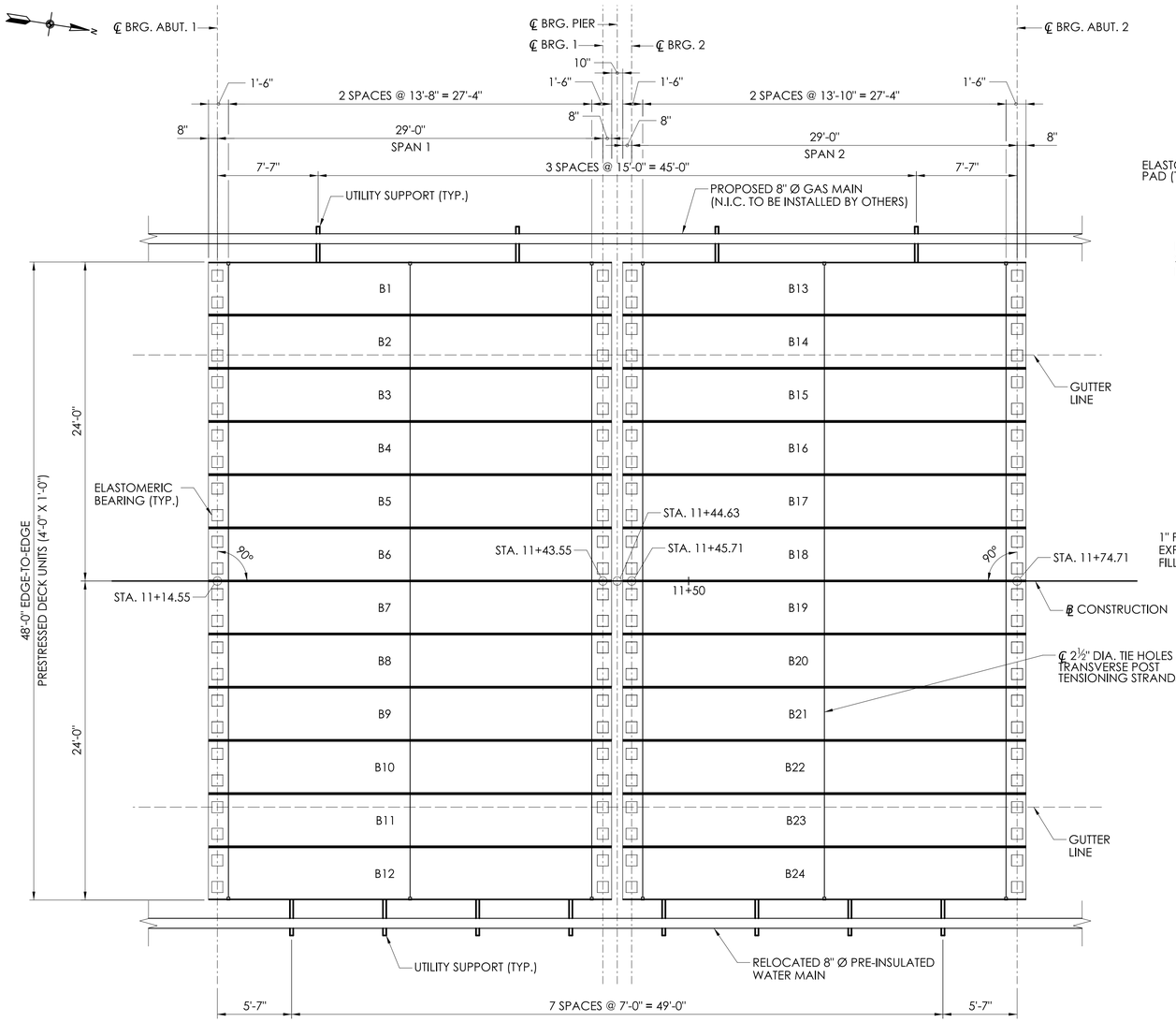

FRAMING PLAN

SCALE: 3/16" = 1'-0"

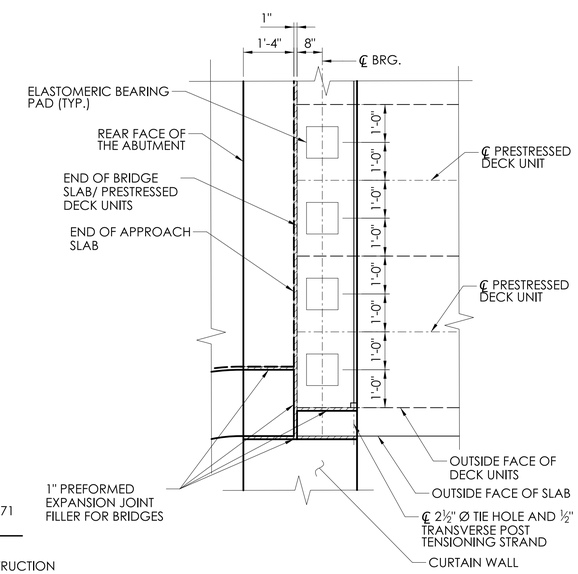

AT ABUTMENT

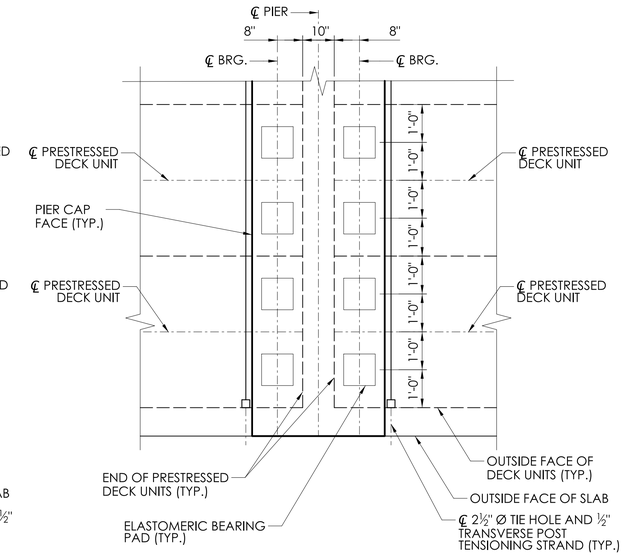

AT PIER

ELASTOMERIC BEARING LAYOUT DETAIL

SCALE: ½" = 1'-0"

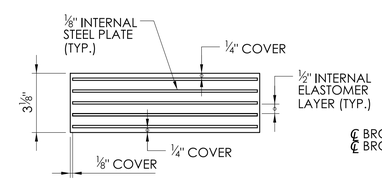

ELASTOMERIC BEARING ELEVATION

SCALE: 3" = 1'-0"

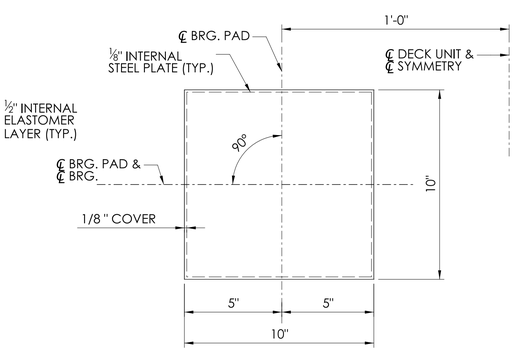

ELASTOMERIC BEARING PLAN

SCALE: 3" = 1'-0"

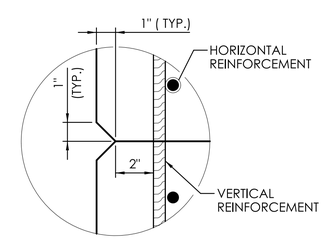

TYPICAL RUSTICATION DETAIL

SCALE: 3" = 1'-0"

ELASTOMERIC BEARING NOTES

1. ELASTOMERIC BEARING PADS SHALL BE NEOPRENE, HARDNESS (SHORE "A" DUROMETER) OF 60, GRADE 3.
2. THE COST OF THE BEARING SHALL BE PAID UNDER "STEEL LAMINATED ELASTOMERIC BEARINGS".
3. DESIGN LOADS: (DESIGN METHOD = DESIGN METHOD A)
   UNFACTORED DESIGN LOADS:
   MAXIMUM DEAD LOAD 12.00 KIPS
   MAXIMUM LIVE LOAD (+ IMPACT) 18.00 KIPS
4. BEARINGS SHOULD BE INSTALLED AT TEMPERATURES BETWEEN 20° F & 70° F. INSTALLATION TEMPERATURES OUTSIDE THIS RANGE WILL REQUIRE ADJUSTMENT.

DESIGNER/DRAFTER: JS CHECKED BY: VLL	SCALE AS NOTED	SIGNATURE/ BLOCK: GM2 ASSOCIATES, INC. 115 GLASTONBURY BLVD. GLASTONBURY, CT 06033	CITY OF BRISTOL	PROJECT NUMBER: 0017-0192 PROJECT DESCRIPTION: REPLACEMENT OF BRIDGE NO. 04487, EAST STREET OVER PEQUABUCK RIVER TOWN(S): BRISTOL DRAWING TITLE: FRAMING PLAN AND SLAB DETAILS	DRAWING NO. S-11 SHEET NO. 22

LASTED SAVED BY: SDahal **FILE NAME:** M:\017_192_East Street_Bristol\330_Design Data\Structure_Bridge\Msta_Contract_Sheet_Files\SB_CB_0017_0192_East_Street_04487_FRAMING PLAN.dgn
PLOTTED DATE: 10/31/2023

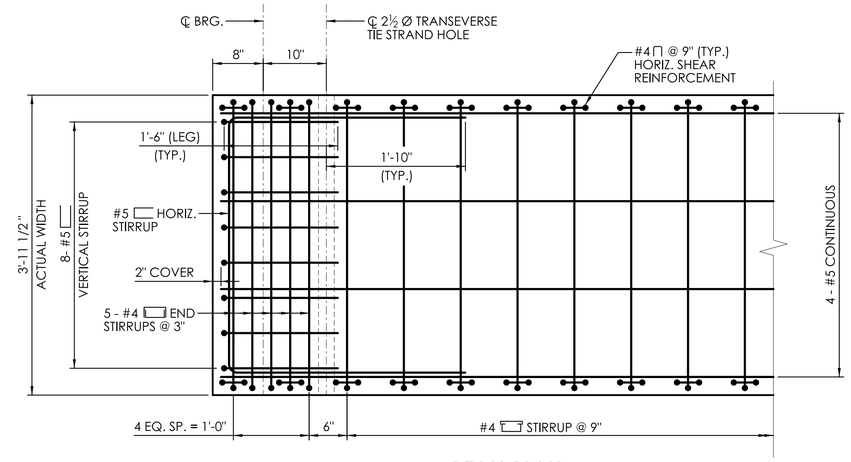

BEAM PLAN

SCALE: 1" = 1'-0"

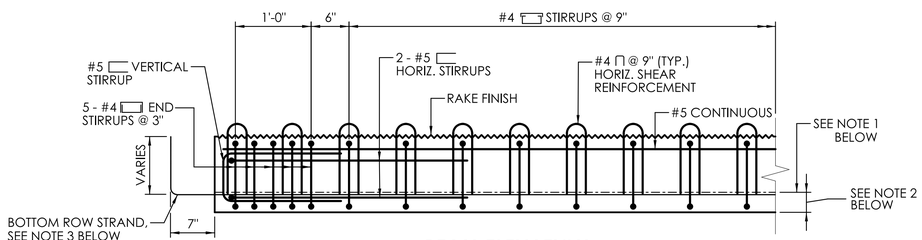

BEAM ELEVATION

SCALE: 1" = 1'-0"

NOTES :

1. CENTER OF GRAVITY OF 22 STRANDS FOR ALL BEAMS.
2. 3.82" FOR ALL BEAMS.
3. ONLY STRANDS IN THE BOTTOM ROW SHALL BE EXTENDED AT PIER ONLY.

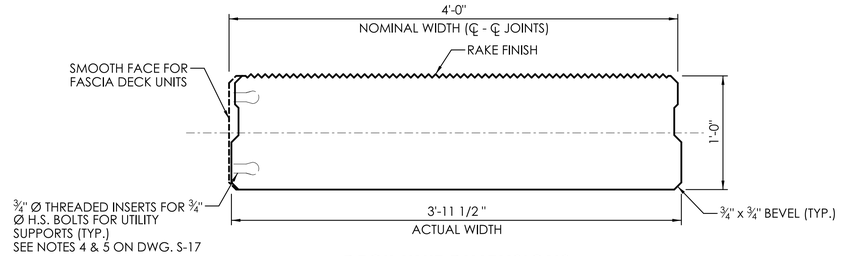

DECK UNIT DIMENSIONS

SCALE: 1½" = 1'-0"

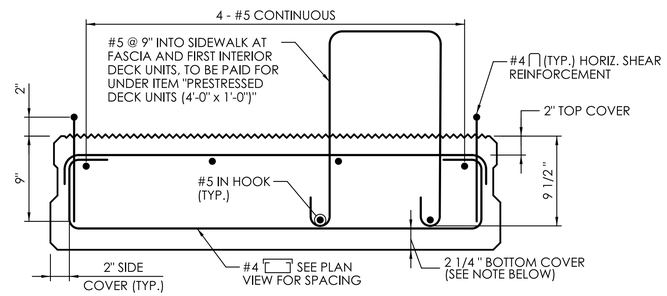

NOTE :

THIS COVER IS REQUIRED TO FACILITATE THE PLACEMENT OF THE BOTTOM PRESTRESING STRANDS. THE FABRICATOR MAY MODIFY COVER (1½" MIN.) IF NO CONFLICT EXIST WITH THE PRESTRESSING STRANDS.

MIDSPAN SECTION

SCALE: 1½" = 1'-0"

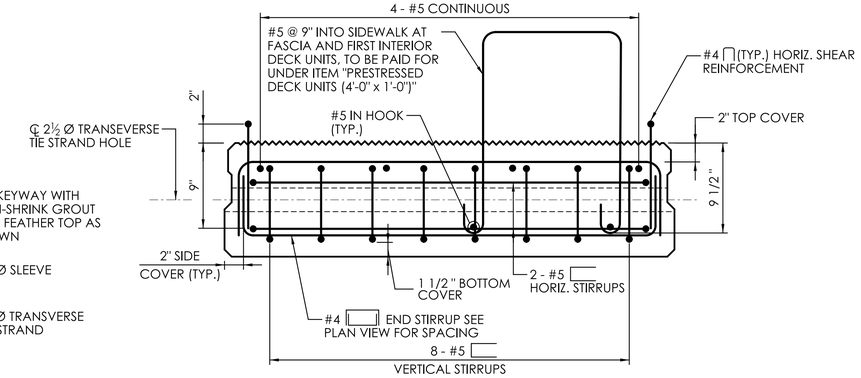

NOTE : SPLAY STIRRUP TO AVOID CONFLICT WITH TRANSVERSE TIE STRAND HOLES.

END SECTION

SCALE: 1½" = 1'-0"

CAMBER TABLE AT MIDSPAN	B1 & B12 (IN)	B2 to B11 (IN)
AT TRANSFER: CAMBER DUE TO PRETENSIONING FORCE AT TRANSFER MINUS THE DEFLECTION DUE TO THE DEAD LOAD OF THE MEMBER.	0.74 ↑	0.74 ↑
AT ERECTION: CAMBER (DUE TO PRETENSIONING FORCE MINUS THE DEFLECTION DUE TO THE DEAD LOAD OF THE MEMBER) THAT IS PRESENT AT APPROXIMATELY 30 DAYS AFTER TRANSFER.	1.31 ↑	1.31 ↑
FINAL: CAMBER AFTER ALL DEAD LOADS ARE APPLIED TO THE STRUCTURE, AND AFTER LONG TERM CREEP AND RELAXATION HAVE TAKEN PLACE.	0.78 ↑	0.85 ↑

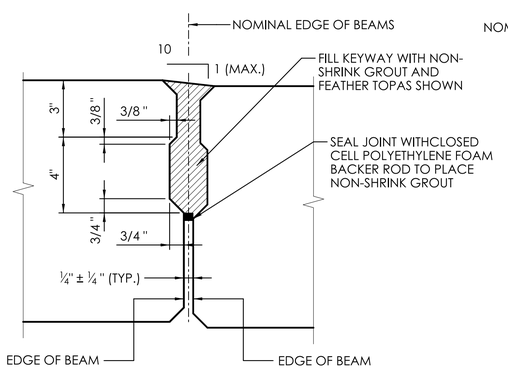

ALONG THE VOIDS

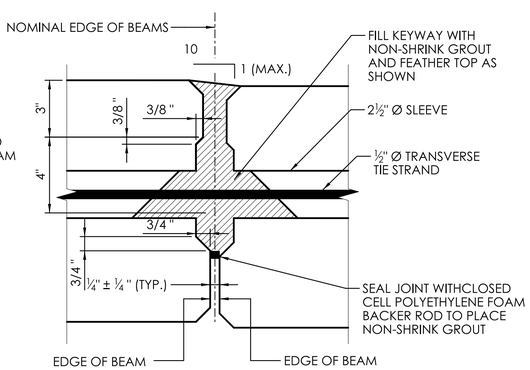

AT TRANSVERSE TIE BLOCK

LONGITUDIONAL JOINTS DETAILS

SCALE: 3" = 1'-0"

NOTES:

1. THE DECK UNITS SHALL BE PLACED AT THE NOMINAL SPACING SHOWN ON THE PLAN WITH A GAP BETWEEN THE UNITS. THE WIDTH OF THE GAPS WILL VARY DUE TO THE SWEEP OF THE UNITS.
2. GROUT FOR SHEAR KEYS SHALL BE RODDED OR VIBRATED TO ENSURE THAT ALL VOIDS IN THE SHEAR KEYS ARE FILLED.
3. GROUTING SHEAR KEYS SHALL BE INCLUDED IN THE COST FOR THE ITEM "PRESTRESSED DECK UNITS (4'-0" x 1'-0")".
4. FOR ADDITIONAL REQUIREMENTS SEE SPECIFICATION FOR ITEM "PRESTRESSED DECK UNITS (4'-0" x 1'-0")".

PRESTRESSED DECK UNIT NOTES:

1. PRESTRESSED CONCRETE DECK UNIT SHALL BE FABRICATED WITH THE FOLLOWING CONCRETE STRENGTHS:
   28 DAYS COMPRESSIVE STRENGTH: f'c = 8.0 KSI
   COMPRESSIVE STRENGTH AT TRANSFER: f'ci = 6.0 KSI
2. STRANDS FOR PRETENSIONING SHALL BE 0.6" Ø, UNCOATED, SEVEN WIRE STRANDS CONFORMING TO THE REQUIREMENTS OF AASHTO M203, GRADE 270, LOW RELAXATION, WITH:
   ULTIMATE STRENGTH: f's = 270 KSI
   JACKING TENSION FORCE: Fj = 44 KIPS PER STRAND
3. ALL REINFORCING STEEL IN PRESTRESSED CONCRETE DECK UNITS, EXCEPT PRESTRESSING STRANDS, SHALL CONFORM TO ASTM A615, GRADE 60, AND BE GALVANIZED, AFTER FABRICATION, TO THE REQUIREMENT OF ASTM A767, CLASS 1, INCLUDING SUPLEMENTAL REQUIREMENT.
4. PRESTRESSING STRANDS SHALL BE PLACED 2" ON CENTER MINIMUM, AND SHALL HAVE 1½" MINIMUM COVER.
5. THE DRILLING OF HOLES IN OR THE USE OF POWER ACTUATED TOOLS ON PRESTRESSED DECK UNITS WILL NOT BE PERMITTED.
6. POCKET FOR TRANSVERSE TIE ANCHORAGE SHALL BE DRY PACKED FLUSH WITH EXTERIOR SURFACE OF THE FASCIA SLAB UNIT AFTER THE TRANSVERSE TENSIONING HAS BEEN COMPLETED.
7. NO ADDITIONAL DEAD LOADS OR LIVE LOADS SHALL BE APPLIED TO THE PRESTRESSED DECK UNITS UNTIL THE THE TRANSVERSE TIES HAVE BEEN FULLY TENSIONED AND THE GROUT IN THE LONGITUDINAL SHEAR KEYS HAS REACHED A SEVEN-DAY COMPRESSIVE STRENGTH OF 4500 PSI.
8. TOP OF ALL DECK UNITS SHALL BE GIVEN A RAKE FINISH (¼" AMPLITUDE) ACROSS THE WIDTH (PERPENDICULAR THE TO BEAM'S AXIS).
9. PRESTRESSED CONCRETE DECK UNITS ARE DESIGNED FOR CONTINUOUS LIVE LOAD AND SUPERIMPOSED DEAD LOAD.

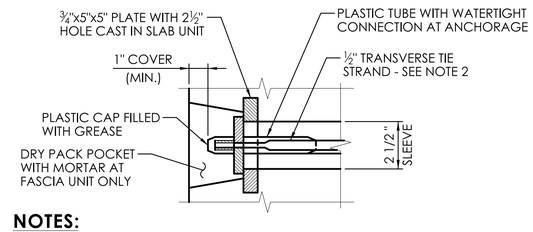

NOTES:

1. OTHER ANCHORAGE SYSTEMS MAY BE SUBSTITUTED WITH THE APPROVAL OF THE ENGINEER. ALTERNATE ANCHORAGE SYSTEMS SHALL BE WATERTIGHT AND CORROSION PROOF.
2. TRANSVERSE TIES SHALL BE COVERED BY A SEAMLESS POLYPROPYLENE SHEATH (WITH CORROSION INHIBITING GREASE BETWEEN THE STRAND AND SHEATH) FOR THE FULL LENGTH OF THE STRAND EXCEPT AT THE ANCHORAGE LOCATION.

TRANSVERSE TIE POCKET DETAIL

SCALE: 3" = 1'-0"

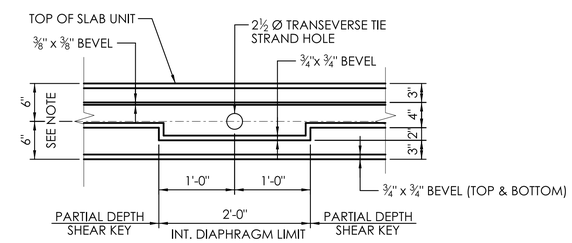

NOTE : THE VERTICAL LOCATION OF THE TRANSVERSE TIE STRANDS MUST BE COORDINATED WITH THE PRESTRESSED STRANDS AND ADJUSTED AS NECESSARY BY THE FABRICATOR.

INTERNAL DIAPHRAGM

SCALE: 1" = 1'-0"

TRANSVERSE TIE TENSIONING NOTES:

1. AFTER ALL BEAMS HAVE BEEN ERECTED, TENSION EACH TRANSVERSE TIE TO 5 KIPS.
2. FILL ALL KEYS WITH NON-SHRINK GROUT. THE CONTRACTOR SHALL COVER AND PROTECT THE KEYWAYS FROM THE WEATHER AND DEBRIS UNTIL THEY ARE FILLED.
3. AFTER THE GROUT HAS ATTAINED A STRENGTH OF 1.5 KSI (BASE ON THE GROUT MANUFACTURER'S DIRECTION), TENSION EACH TRANSVERSE TIE TO 30 KIPS. NO TRAFFIC OR HEAVY EQUIPMENT WILL BE PERMITTED ON THE PRESTRESSED DECK UNITS UNTIL ALL TIES HAVE BEEN FULLY TENSIONED.
4. CONCRETE FOR SLAB AND SIDEWALKS SHALL NOT BE PLACED UNTIL THE TRANSVERSE TIES HAVE BEEN FULLY TENSIONED.

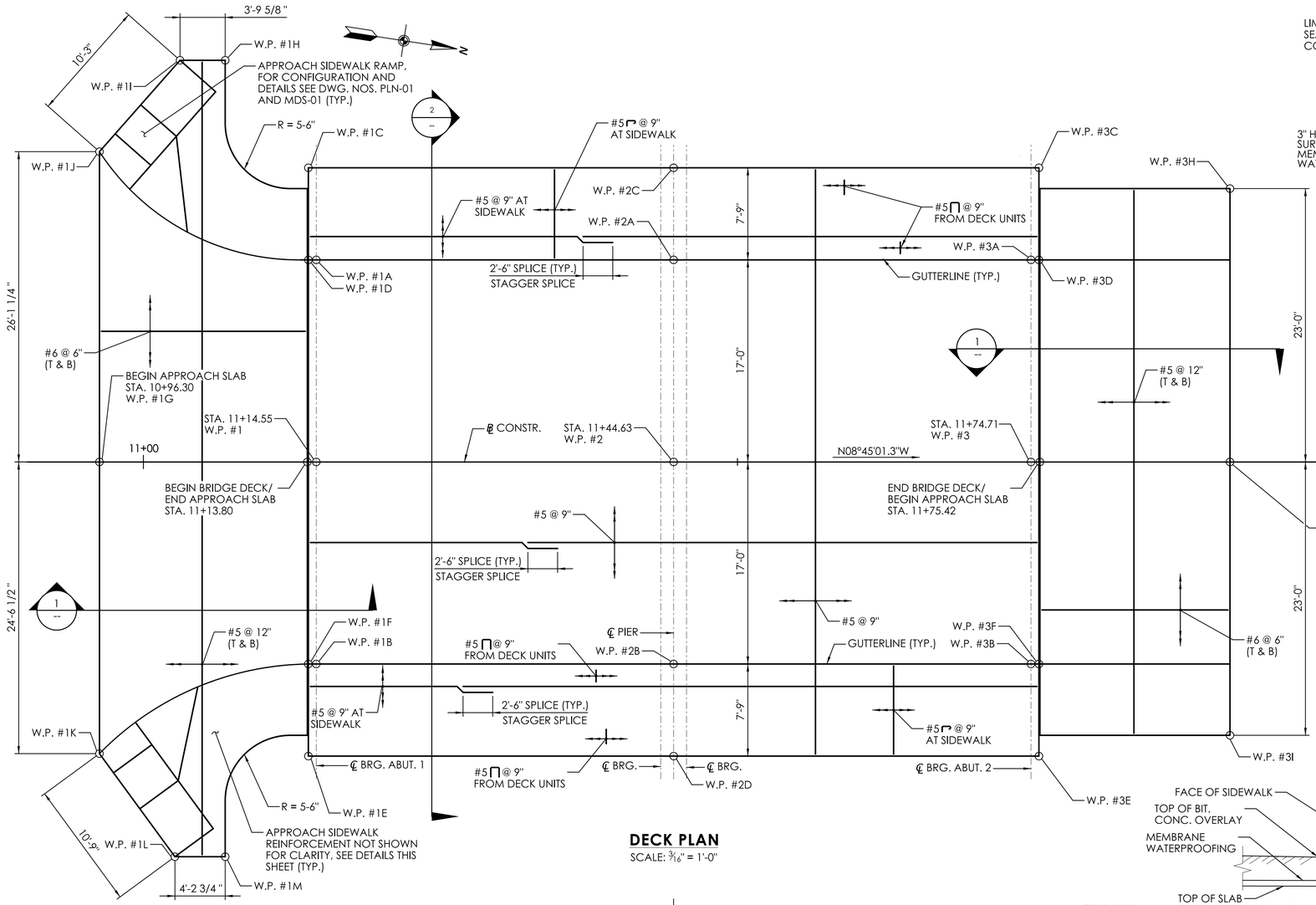

DECK PLAN

SCALE: 3/16" = 1'-0"

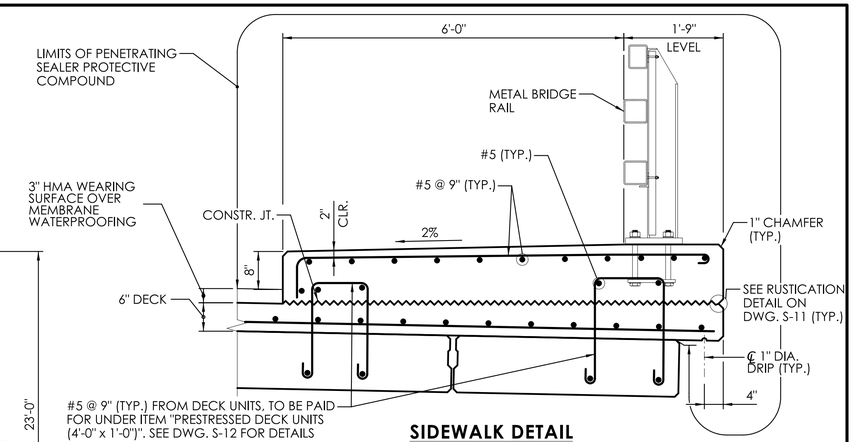

SIDEWALK DETAIL

SCALE: 3/4" = 1'-0"

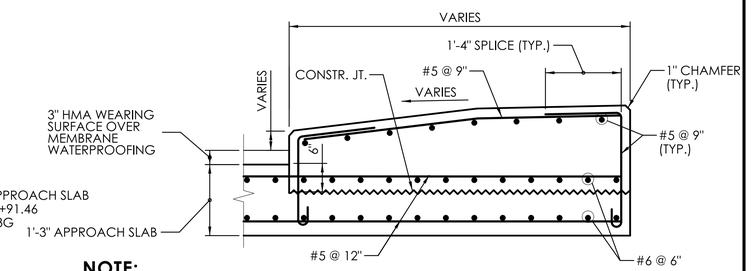

NOTE:

FOR SIDEWALK AND SIDEWALK RAMP CONFIGURATION AND DETAILS SEE DWG. NOS. PLN-01 AND MDS-01.

SIDEWALK OVER APPROACH SLAB-1 DETAIL

SCALE: 3/4" = 1'-0"

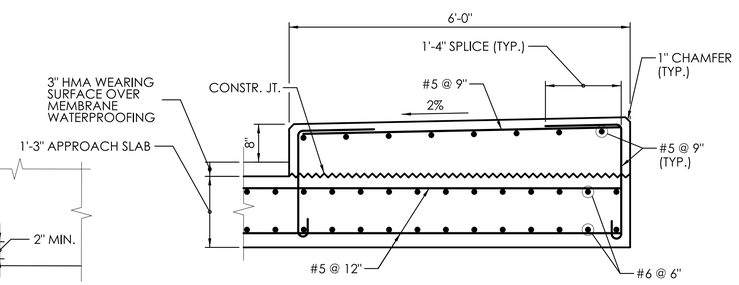

SIDEWALK OVER APPROACH SLAB-2 DETAIL

SCALE: 3/4" = 1'-0"

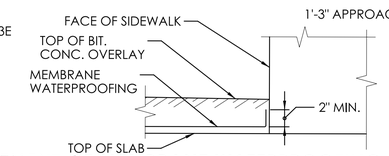

TREATMENT OF MEMBRANE WATERPROOFING AT GUTTER

NOT TO SCALE

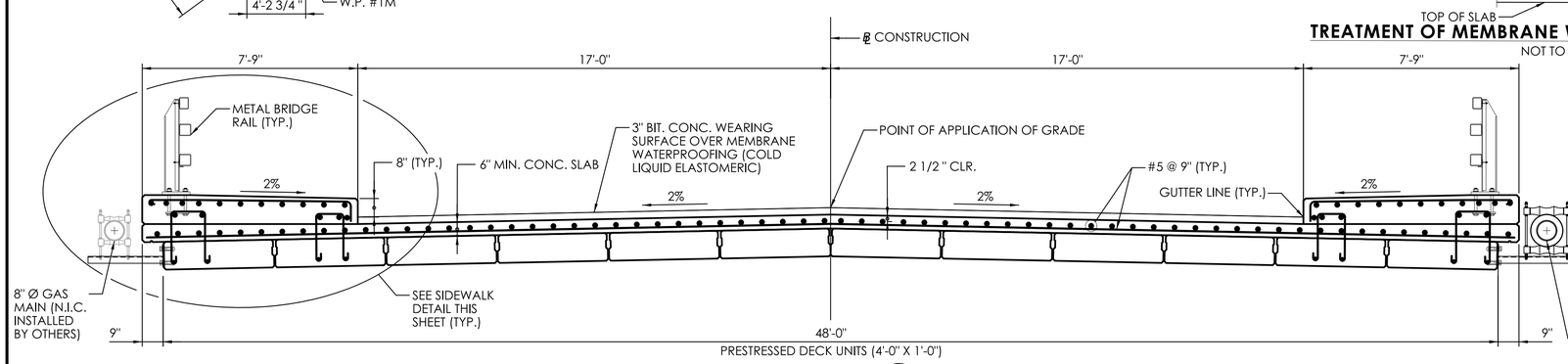

SECTION 2

SCALE: 3/8" = 1'-0"

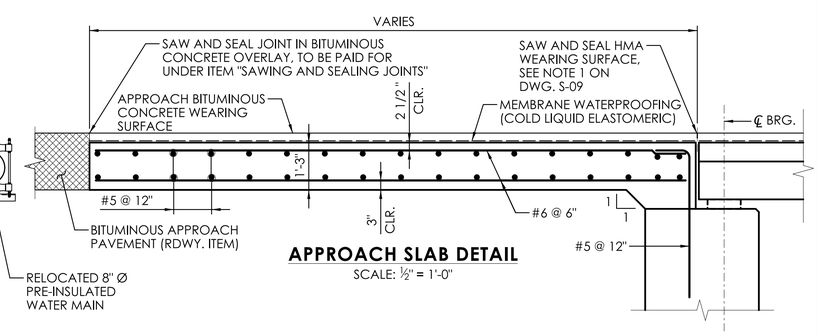

APPROACH SLAB DETAIL

SCALE: 1/2" = 1'-0"

DESIGNER/DRAFTER: SD CHECKED BY: VLL	SCALE AS NOTED	SIGNATURE/ BLOCK: GM2 ASSOCIATES, INC. 115 GLASTONBURY BLVD. GLASTONBURY, CT 06033	CITY OF BRISTOL	PROJECT NUMBER: 0017-0192 PROJECT DESCRIPTION: REPLACEMENT OF BRIDGE NO. 04487, EAST STREET OVER PEQUABUCK RIVER TOWN(S): BRISTOL DRAWING TITLE: DECK DETAILS
				DRAWING NO. S-13 SHEET NO. 24

LASTED SAVED BY: JShohet FILE NAME: M:\017_192_East Street_Bristol\330_Design Data\Structure_Bridge\Msta_Contract_Sheet_Files\SB_CB_0017_0192_East_Street_04487_BOR-1.dgn
PLOTTED DATE: 10/31/2023

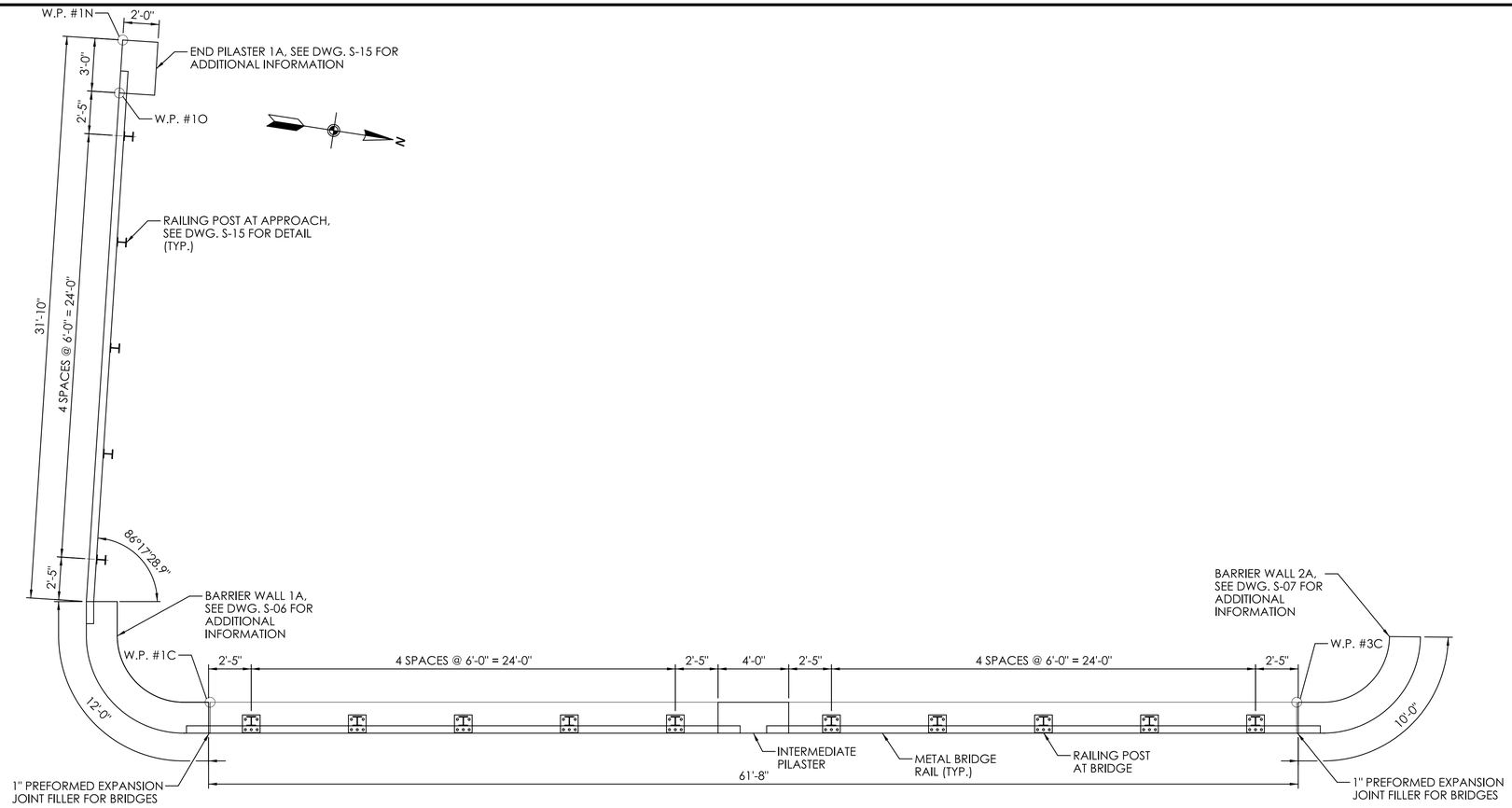

WEST RAILING PLAN

SCALE: ¼" = 1'-0"

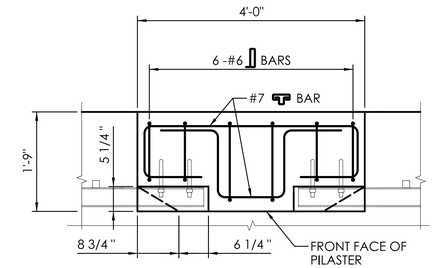

SECTION 1

SCALE: ¾" = 1'-0"

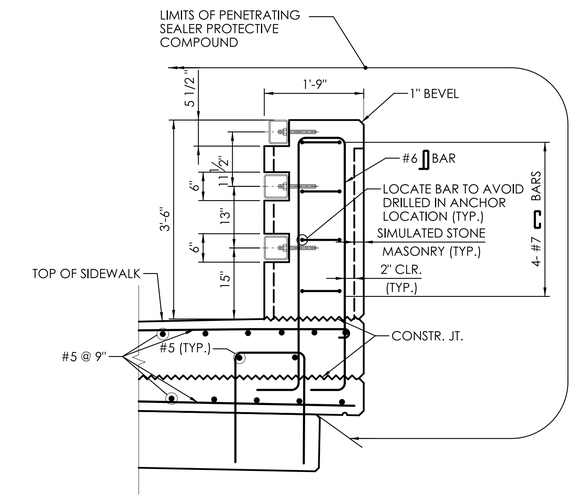

SECTION 2

SCALE: ¾" = 1'-0"

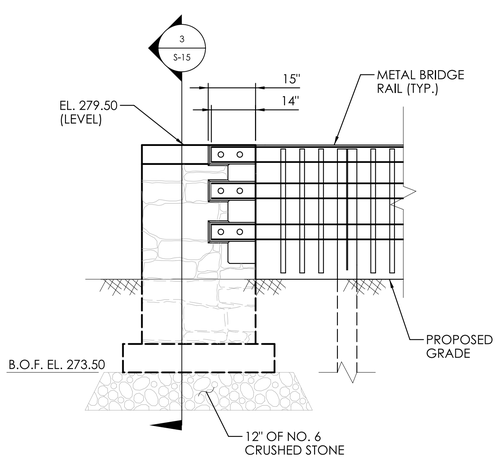

END PILASTER 1A - ELEVATION

SCALE: ½" = 1'-0"

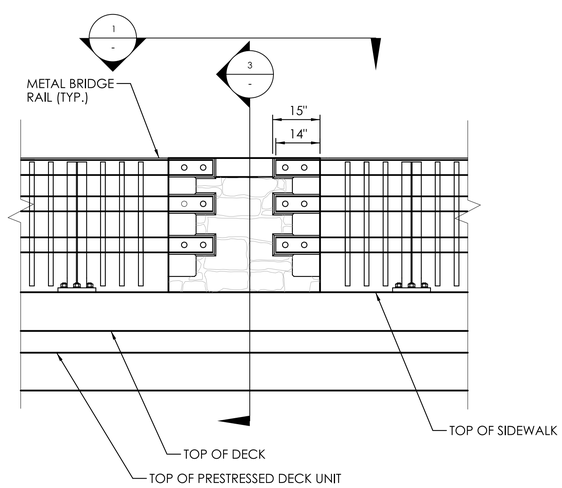

INTERMEDIATE PILASTER - ELEVATION

SCALE: ½" = 1'-0"

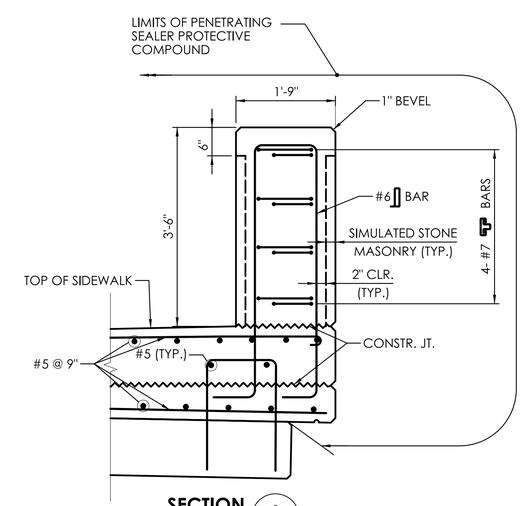

SECTION 3

SCALE: ¾" = 1'-0"

REV.	DATE	REVISION DESCRIPTION

DESIGNER/DRAFTER: CHECKED BY:

SCALE AS NOTED

SIGNATURE/ BLOCK:

CITY OF BRISTOL

PROJECT NUMBER: 0017-0192
PROJECT DESCRIPTION: REPLACEMENT OF BRIDGE NO. 04487, EAST STREET OVER PEQUABUCK RIVER
TOWN(S): BRISTOL
DRAWING TITLE: WEST RAILING LAYOUT

DRAWING NO. S-14
SHEET NO. 25

LASTED SAVED BY: JShohet **FILE NAME:** M:\017_192_East Street_Bristol\330_Design Data\Structure_Bridge\Msta_Contract_Sheet_Files\SB_CB_0017_0192_East_Street_04487_RAIL-LYT-WEST.dgn
PLOTTED DATE: 10/31/2023

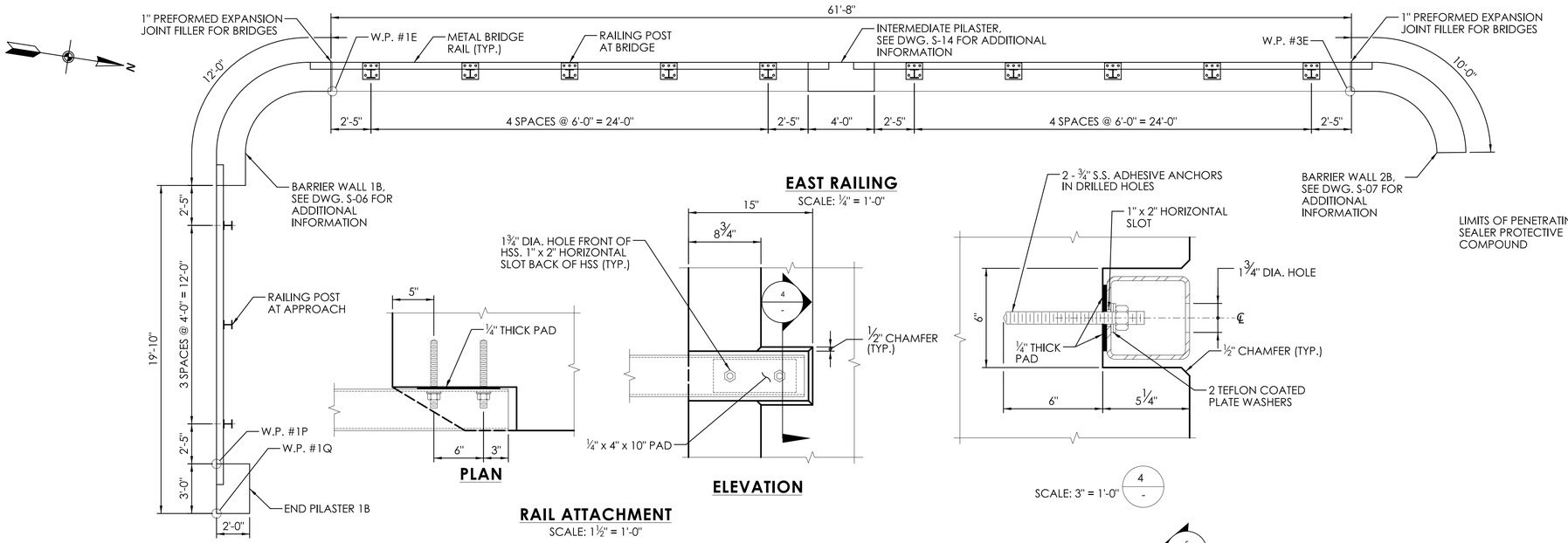

EAST RAILING

SCALE: ¼" = 1'-0"

PLAN

ELEVATION

RAIL ATTACHMENT

SCALE: 1½" = 1'-0"

SCALE: 3" = 1'-0" (4 / -)

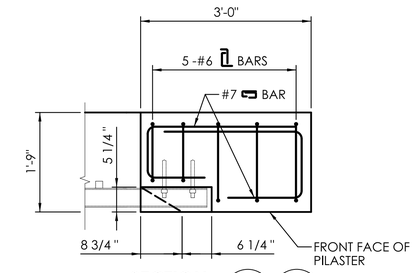

SECTION

SCALE: ¾" = 1'-0" (1 / -) (1 / S-14)

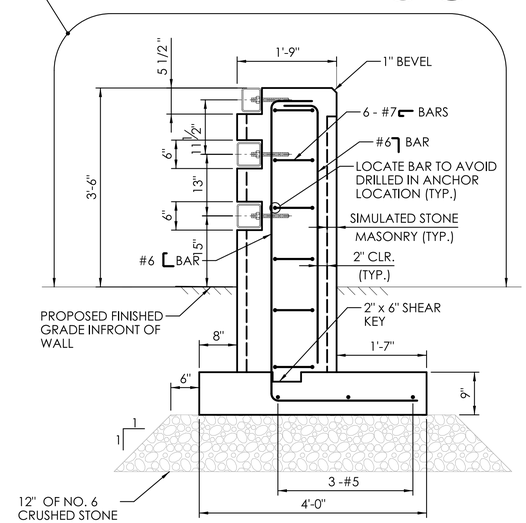

SECTION

SCALE: ¾" = 1'-0" (2 / -) (2 / S-14)

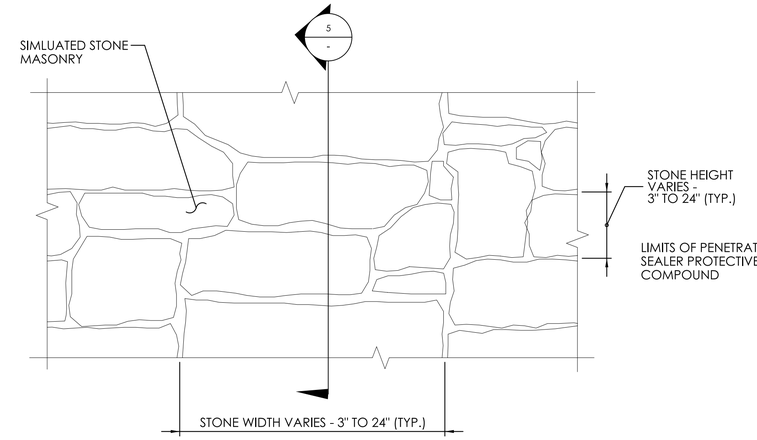

ELEVATION

SIMULATED STONE MASONRY

N.T.S.

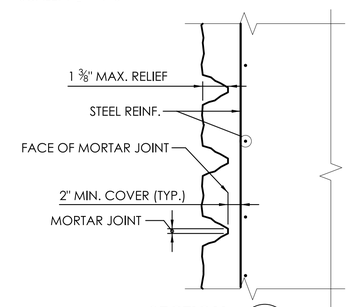

SECTION

N.T.S.

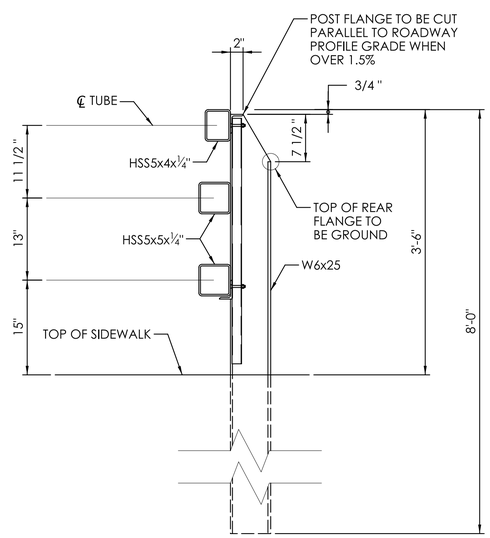

RAIL POST AT APPROACH

SCALE: 1" = 1'-0"

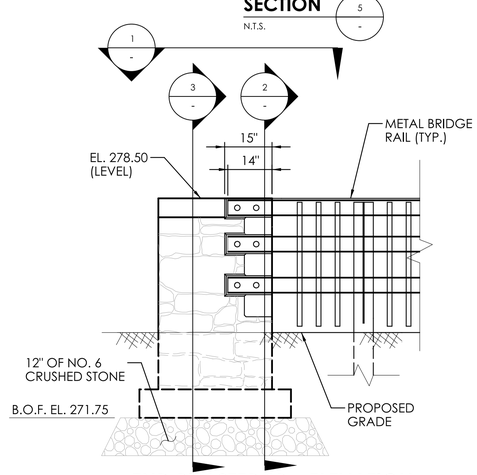

END PILASTER 1B - ELEVATION

SCALE: ½" = 1'-0"

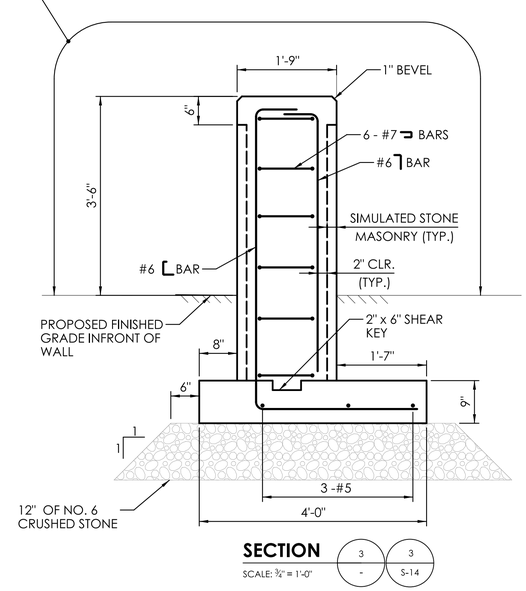

SECTION

SCALE: ¾" = 1'-0" (3 / -) (3 / S-14)

SIMULATED STONE MASONRY NOTES:

1. WHERE SHOWN ON THE PLANS, THE CONTRACTOR SHALL UTILIZE CONCRETE FORM LINERS TO SIMULATE STONE MASONRY CONSTRUCTION. THE COST OF THIS WORK SHALL BE PAID FOR UNDER ITEM "SIMULATED STONE MASONRY".
2. THE SIMULATED STONE MASONRY PATTERN PROVIDED SHALL BE DETERMINED BASED UPON THE LENGTH AND HEIGHT OF THE PILASTERS AND BARRIER WALLS.
3. THE CONTRACTOR SHALL SUBMIT TO THE ENGINEER FOR APPROVAL LAYOUT DRAWINGS OF ALL SIMULATED STONE MASONRY STONE SIZES, STONE CONFIGURATIONS, JOINT SPACINGS, AND ALL DIMENSIONS REQUIRED.
4. IN ADDITION TO THE DETAILS SHOWN, ALL EXPOSED EDGES SHALL RECEIVE A 1" x 1" BEVEL UNLESS DIMENSIONED OTHERWISE.

REV.	DATE	REVISION DESCRIPTION

DESIGNER/DRAFTER: CHECKED BY:

SCALE AS NOTED

SIGNATURE/ BLOCK:

CITY OF BRISTOL

PROJECT NUMBER: 0017-0192
PROJECT DESCRIPTION: REPLACEMENT OF BRIDGE NO. 04487, EAST STREET OVER PEQUABUCK RIVER
TOWN(S): BRISTOL
DRAWING TITLE: EAST RAILING LAYOUT

DRAWING NO. S-15
SHEET NO. 26

LASTED SAVED BY: JShohet FILE NAME: M:\017_192_East Street_Bristol\330_Design Data\Structure_Bridge\Msta_Contract_Sheet_Files\SB_CB_0017_0192_East_Street_04487_RAIL-LYT-EAST.dgn
PLOTTED DATE: 10/31/2023

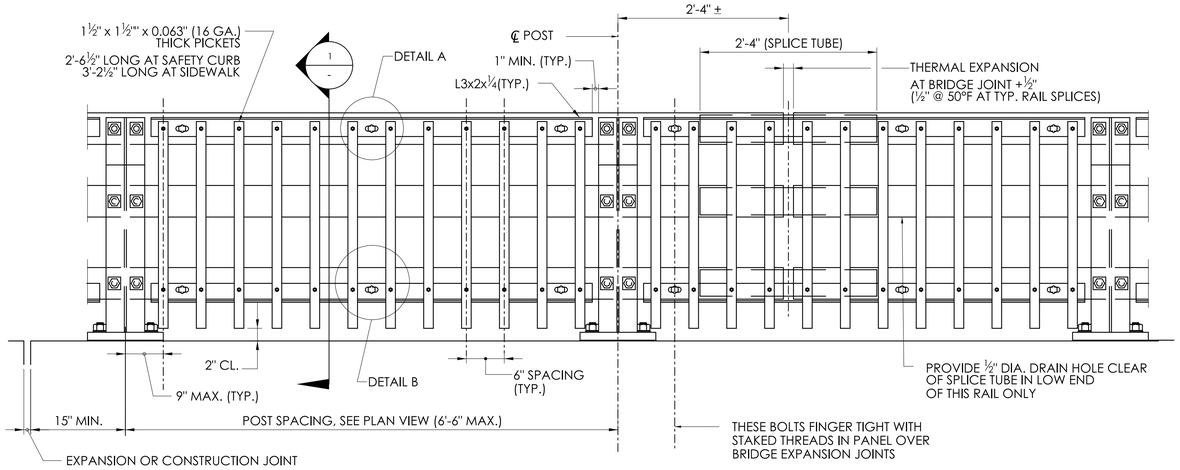

BRIDGE RAILING ELEVATION
SCALE: 1" = 1'-0"

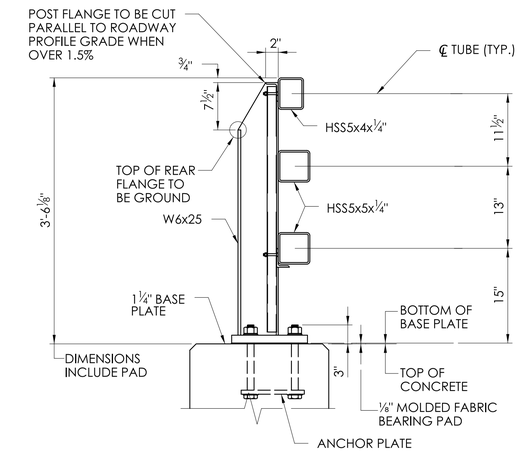

SECTION 1
SCALE: 1" = 1'-0"

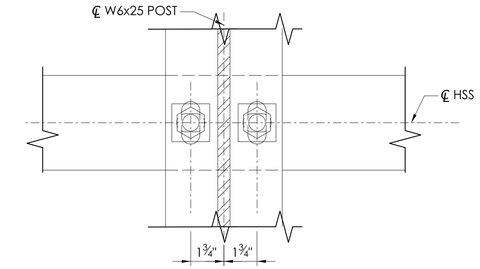

SECTION THRU POST WEB

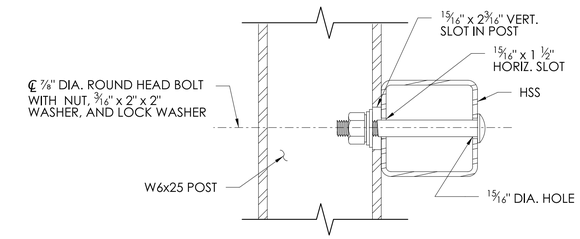

SECTION THRU RAIL

NOTE:
CONNECTIONS AT LOWER RAIL SHOWN.
CONNECTIONS AT TOP RAIL SIMILAR.

TYPICAL RAIL TO POST CONNECTIONS
SCALE: 3" = 1'-0"

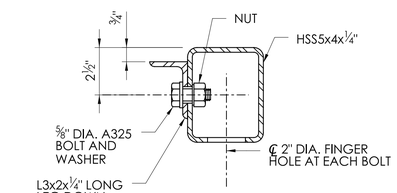

SECTION 2

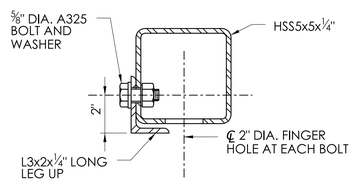

SECTION 4

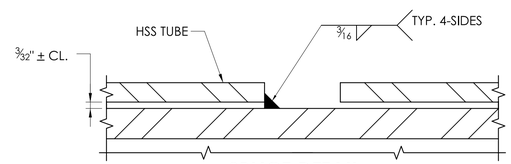

SPLICE DETAIL
FULL SIZE

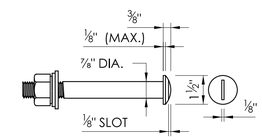

7/8" DIA. ROUND HEAD BOLT
SCALE: 3" = 1'-0"

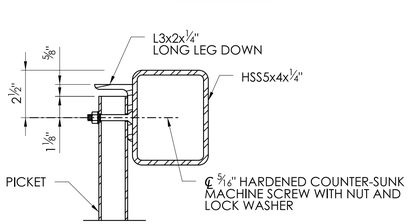

SECTION 3

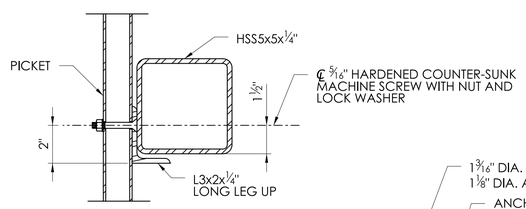

SECTION 5

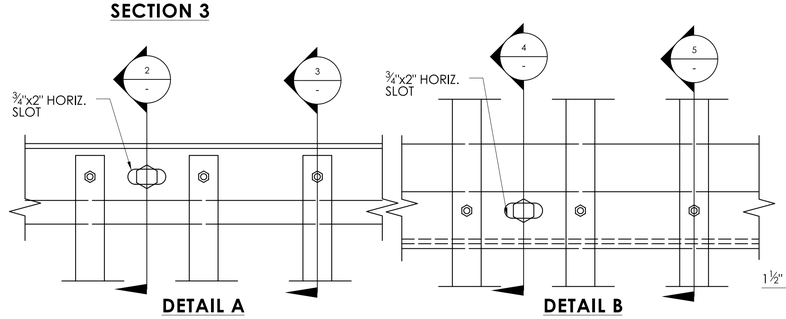

DETAIL A **DETAIL B**

TYPICAL PICKET TO RAIL DETAILS
SCALE: 3" = 1'-0"

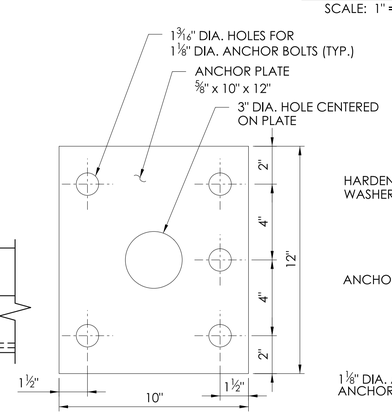

ANCHOR PLATE
SCALE: 3" = 1'-0"

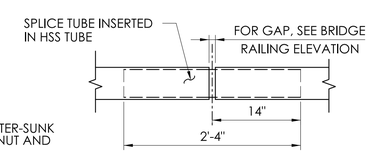

TYPICAL SPLICE
SCALE: 1" = 1'-0"

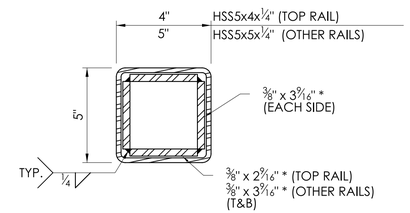

SPLICE TUBE DETAILS
SCALE: 3" = 1'-0"

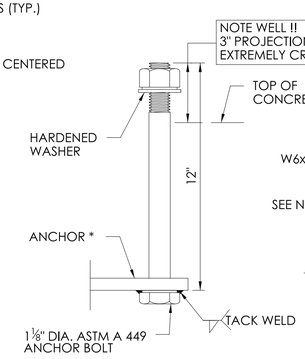

ANCHOR BOLT
SCALE: 3" = 1'-0"

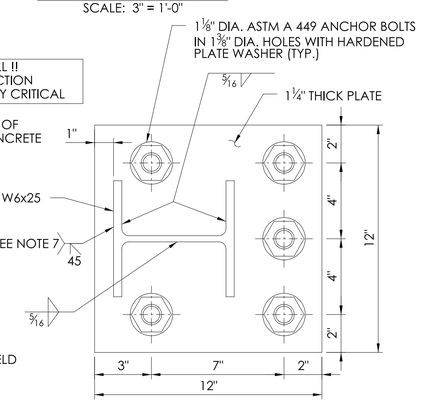

BASE PLATE
SCALE: 3" = 1'-0"

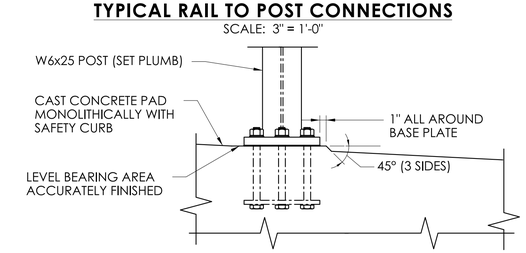

SETTING OF POSTS (PROFILE GRADE OVER 1.5%)
SCALE: 3" = 1'-0"

RAILING NOTES:

1. FOR MATERIAL REQUIREMENTS SEE SPECIAL PROVISION FOR ITEM "METAL BRIDGE RAIL".
2. ALL STEEL (EXCEPT THE 5/8" ANCHOR PLATE AND FASTENERS) SHALL BE GALVANIZED AND PAINTED BLACK (FEDERAL STD. 595B COLOR NO. 17038). ANCHOR PLATE SHALL BE GALVANIZED ONLY. HEADS OF 7/8" DIA. ROUND HEAD BOLTS SHALL BE PAINTED TO MATCH RAIL.
3. ANCHOR BOLTS SHALL BE SET WITH TEMPLATES. THE NUT SECURING THE POST BASE PLATE TO THE CONCRETE SHALL BE TIGHTENED TO A SNUG FIT AND GIVEN AN ADDITIONAL 1/8 TURN AFTER STEEL IS IN PLACE.
4. RAILS SHALL BE CONTINUOUS OVER A MINIMUM OF FOUR (4) POSTS WITHOUT SPLICES WHERE POSSIBLE. RAILS SHALL BE SPLICED IN THE PANELS OVER EXPANSION JOINT.
5. ENDS OF TUBE SECTIONS SHALL BE SAWED. GRIND SMOOTH EXPOSED EDGES. ALL CUT ENDS SHALL BE TRUE AND SMOOTH.
6. ALL POSTS TO BE PLUMB WHEN PROFILE GRADE EXCEEDS 1.5%. FOR PROFILE GRADES LESS THAN 1.5%, POSTS SHALL BE SET PERPENDICULAR TO GRADE.
7. POST FLANGE WELD DOES NOT REQUIRE MAGNETIC PARTICLE TESTING. WELD SHALL BE BACK-GOUGED ON BACK SIDE EXCEPT AT WEB. WELD IS THE SAME ON BOTH FLANGES.
8. 7/8" DIA. ROUND HEAD BOLTS SHALL CONFORM TO THE CHEMICAL AND PHYSICAL REQUIREMENTS OF AASHTO M 164.

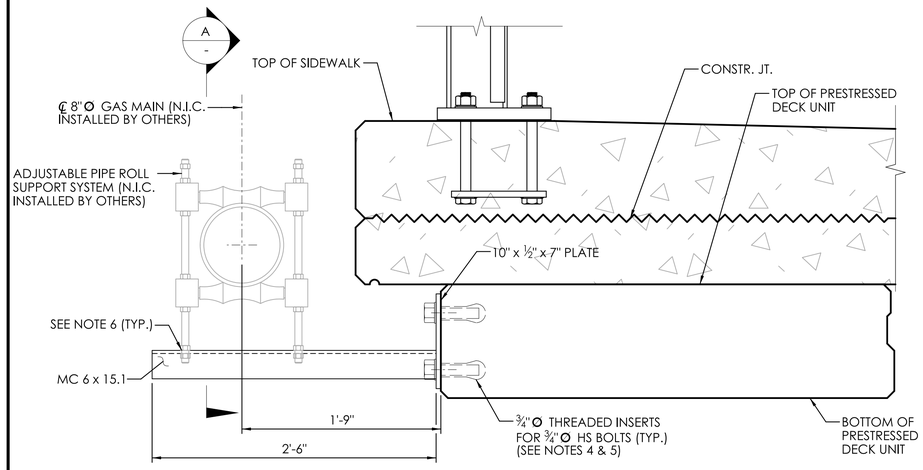

GAS MAIN SUPPORT DETAIL

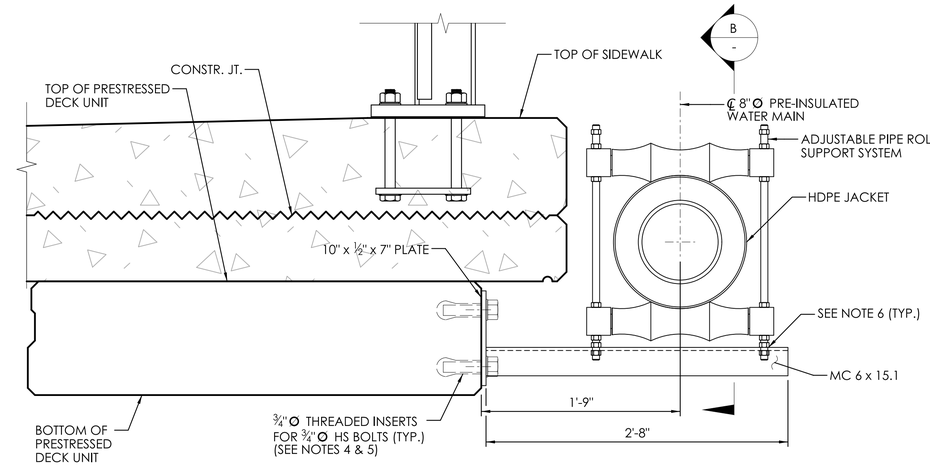

WATER MAIN SUPPORT DETAIL

UTILITY SUPPORT DETAILS

SCALE: 1½" = 1'-0"

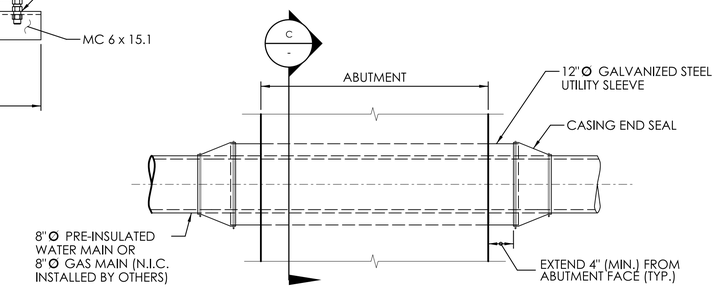

PLAN

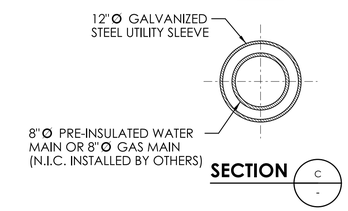

SECTION C

UTILITY DETAIL AT ABUTMENT

SCALE: 1" = 1'-0"

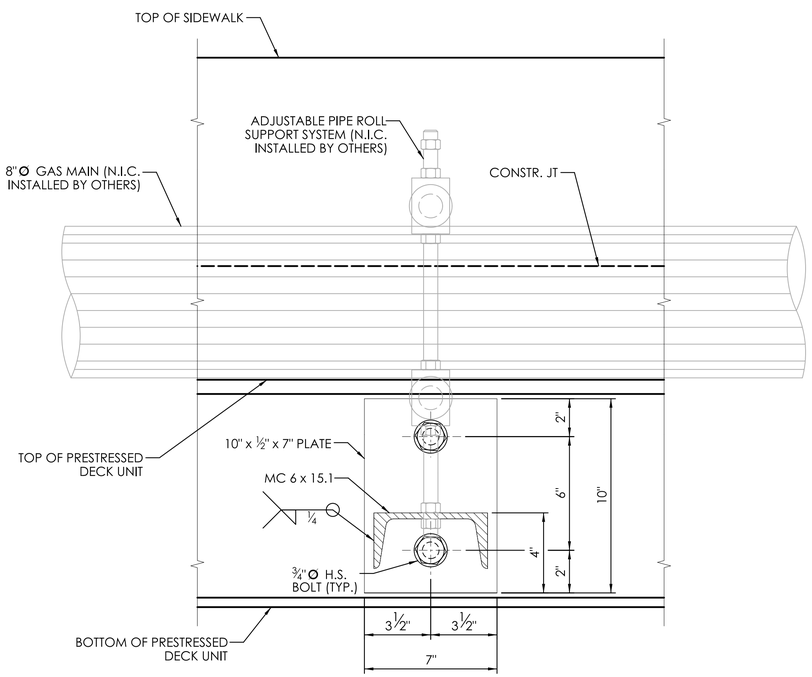

SECTION A

SCALE: 3" = 1'-0"

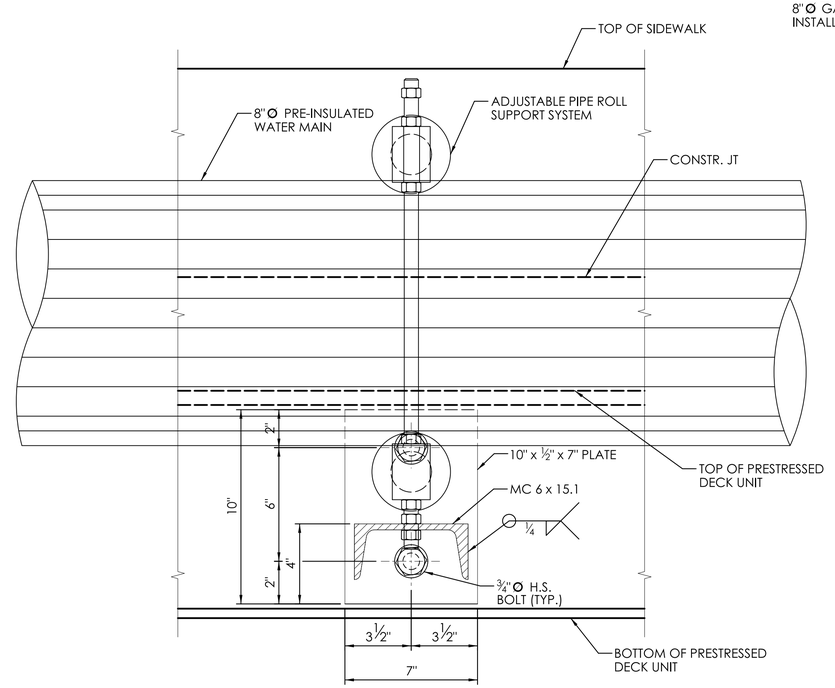

SECTION B

SCALE: 3" = 1'-0"

NOTES:

1. UTILITY SLEEVES AND CASING END SEALS FOR 8"Ø GAS MAIN WILL BE PROVIDED BY EVERSOURCE ELECTRIC. UTILITY SLEEVES AND CASING END SEALS FOR 8"Ø PRE-INSULATED WATER MAIN WILL BE PROVIDED BY CONTRACTOR.
2. UTILITY SLEEVES SHALL BE STEEL PIPE CONFORMING TO ASTM A-53, TYPE S, GRADE B, STANDARD WEIGHT, PLAIN ENDS, HOT-DIP GALVANIZED AND SHALL BE SET IN THE FORMS PRIOR TO PLACING CONCRETE.

NOTES:

1. UTILITY SUPPORTS SHALL BE PAID FOR UNDER THE ITEM "STRUCTURAL STEEL".
2. ALL THE STRUCTURAL STEEL FOR UTILITY SUPPORTS SHALL CONFORM TO AASHTO M270 GRADE 50 T2 AND SHALL BE HOT DIP GALVANIZED AFTER SHOP FABRICATION IN CONFORMANCE WITH ASTM A123. ALL BOLTS SHALL BE MECHANICALLY GALVANIZED IN CONFORMANCE WITH ASTM A325.
3. MATERIALS, FURNISHING AND INSTALLATION OF 8"Ø GAS MAIN ON SUPPORTS WILL BE COMPLETED BY EVERSOURCE ELECTRIC. MATERIALS, FURNISHING AND INSTALLATION OF 8"Ø PRE-INSULATED WATER MAIN ON SUPPORTS WILL BE COMPLETED BY CONTRACTOR.
4. THE ¾"Ø THREADED INSERTS FOR ¾"Ø HS BOLTS SHALL BE CAST INTO THE PRECAST BEAMS BY THE FABRICATOR AND SHALL PROVIDE A MINIMUM TENSILE RESISTANCE OF 6 KIPS AND A MINIMAL NOMINAL SHEAR RESISTANCE OF 6 KIPS IN 5000 PSI CONCRETE.
5. INSERTS SHALL BE POSITIONED TO AVOID INTERFERENCE WITH PRESTRESSING STRANDS.
6. THE LOCATIONS OF HOLES IN THE CHANNEL FOR UTILITY SUPPORT ASSEMBLIES SHALL BE COORDINATED BASED ON THE ADJUSTABLE PIPE ROLL SUPPORT SYSTEMS USED.
7. ADJUSTABLE PIPE ROLL SUPPORTS FOR 8"Ø GAS MAIN TO BE INSTALLED BY EVERSOURCE ELECTRIC. ADJUSTABLE PIPE ROLL SUPPORTS FOR 8"Ø PRE-INSULATED WATER MAIN TO BE INSTALLED BY CONTRACTOR.

DESIGNER/DRAFTER: JS CHECKED BY: VLL	SCALE AS NOTED	SIGNATURE/ BLOCK: GM2 ASSOCIATES, INC. 115 GLASTONBURY BLVD. GLASTONBURY, CT 06033	CITY OF BRISTOL	PROJECT NUMBER: 0017-0192 PROJECT DESCRIPTION: REPLACEMENT OF BRIDGE NO. 04487, EAST STREET OVER PEQUABUCK RIVER TOWN(S): BRISTOL DRAWING TITLE: UTILITY DETAILS	DRAWING NO. S-17 SHEET NO. 28

LASTED SAVED BY: SDahal **FILE NAME:** M:\017_192_East Street_Bristol\330_Design Data\Structure_Bridge\Msta_Contract_Sheet_Files\SB_CB_0017_0192_East_Street_04487_ABUTMENT_DETAILS.dgn
PLOTTED DATE: 11/6/2023

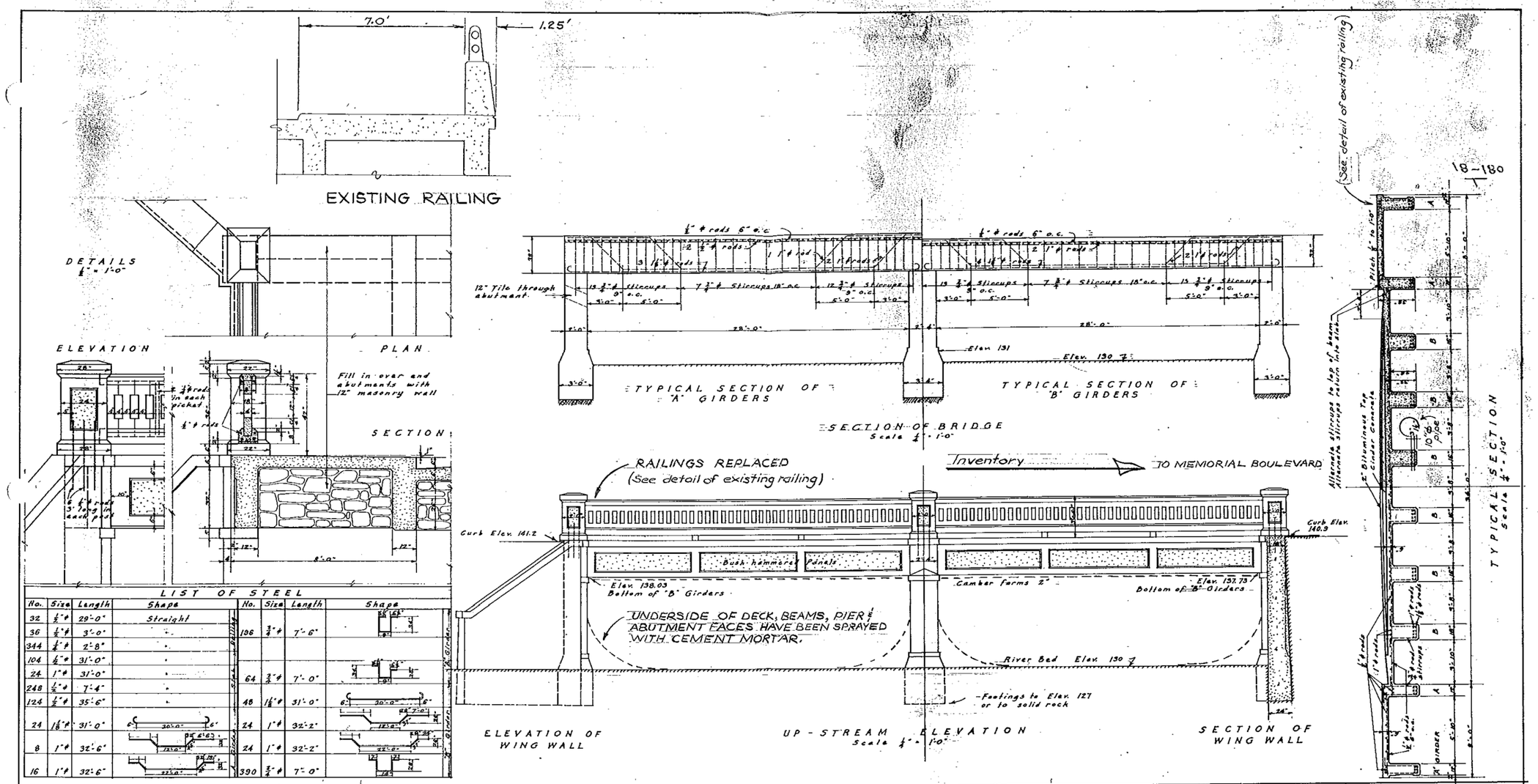

LIST OF STEEL

No.	Size	Length	Shape	No.	Size	Length	Shape
32	1/2" ø	29'-0"	Straight	196	3/4" ø	7'-6"	
36	1/2" ø	3'-0"	"				
344	1/2" ø	2'-8"	"				
104	1/2" ø	31'-0"	"				
24	1" ø	31'-0"	"	64	3/4" ø	7'-0"	
248	1/2" ø	7'-4"	"				
124	1/2" ø	35'-6"	"	48	1 1/8" ø	31'-0"	
24	1 1/8" ø	31'-0"		24	1" ø	32'-2"	
8	1" ø	32'-6"		24	1" ø	32'-2"	
16	1" ø	32'-6"		390	3/4" ø	7'-0"	

JUNE 1929
SCALE (SHOWN)

PLANS FOR NEW BRIDGE OVER PEQUABUCK RIVER AT EAST STREET - BRISTOL, CONN.

CARLETON W. BUELL
CITY ENGINEER

REDUCTION FROM ORIGINAL SIZE - 50%

CDOT BRIDGE NO. 04487

RECORD PLAN - 01
FOR INFORMATION ONLY (N.T.S.)

DESIGNER/DRAFTER: SD CHECKED BY: VLL

NOT TO SCALE

SIGNATURE/BLOCK: GM2 ASSOCIATES, INC. 115 GLASTONBURY BLVD. GLASTONBURY, CT 06033

CITY OF BRISTOL

PROJECT NUMBER: 0017-0192
PROJECT DESCRIPTION: REPLACEMENT OF BRIDGE NO. 04487, EAST STREET OVER PEQUABUCK RIVER
TOWN(S): BRISTOL
DRAWING TITLE: RECORD PLAN - 01

DRAWING NO. S-18
SHEET NO. 29

LASTED SAVED BY: JShohet **FILE NAME:** M:\017_192_East Street_Bristol\330_Design Data\Structure_Bridge\Msta_Contract_Sheet_Files\SB_CB_0017_0192_East_Street_04487_BOR-1.dgn
PLOTTED DATE: 11/6/2023

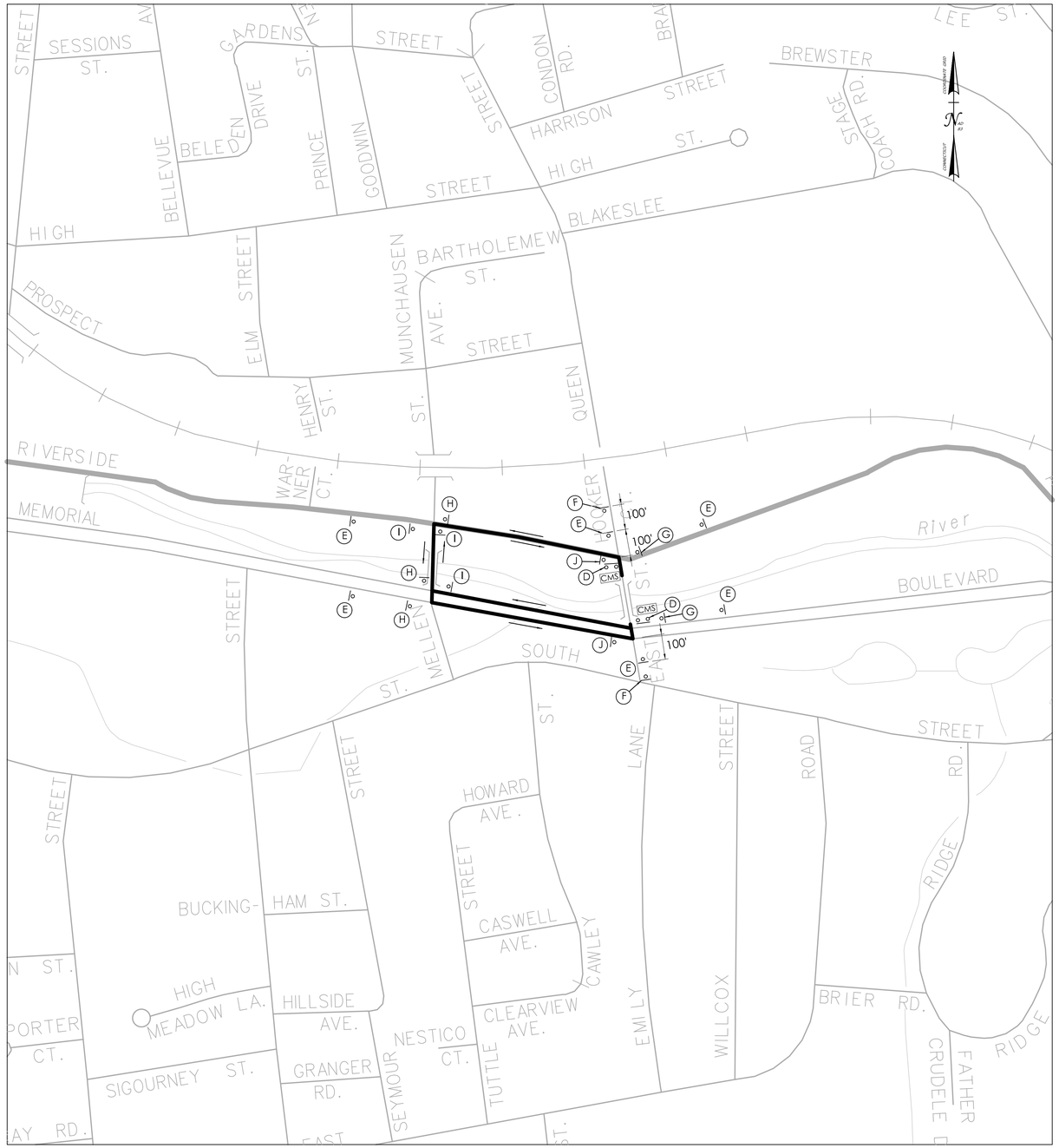

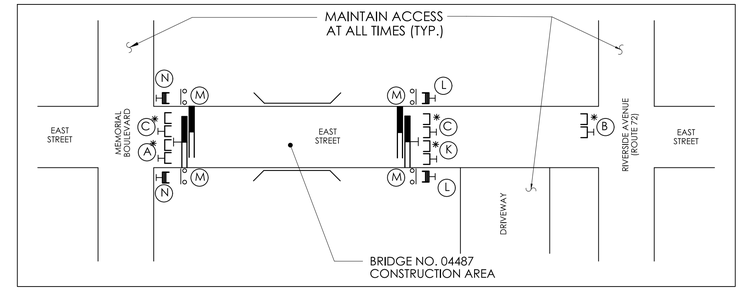

DETAIL A
NOT TO SCALE

LEGEND

- SIGN - SINGLE POST
- SIGN - DOUBLE POST
- CONSTRUCTION BARRICADE - TYPE III
- CONSTRUCTION BARRICADE DETECTABLE
- SIGN MOUNTED ON CONSTRUCTION BARRICADE/TPCBC
- TEMPORARY PRECAST CONCRETE BARRIER CURB
- SIGN WITH HIGH INTENSITY BARRICADE WARNING LIGHT
- CMS — CHANGEABLE MESSAGE SIGN (CMS)

SIGN LEGEND

(A) ROAD CLOSED / DETOUR — 80-9080, 80-9702 (L)

(B) ROAD CLOSED 200 FEET AHEAD LOCAL TRAFFIC ONLY / DETOUR — 80-9077, 80-9701 (R)

(C) DO NOT ENTER — 31-1120

(D) CONSTRUCTION AHEAD ROAD USE RESTRICTED STATE LIABILITY LIMITED GENERAL STATUTES SEC 13a-115, 13a-149 COMMISSIONER OF TRANSPORTATION — 80-1613

(E) EAST STREET — DETOUR AHEAD — 80-9919, 80-9933

(F) EAST STREET — ROAD CLOSED AHEAD — 80-9919, 80-9933

(G) EAST STREET — DETOUR — 80-9919, 80-9710 (S)

(H) EAST STREET — DETOUR — 80-9919, 80-9710 (L)

(I) EAST STREET — DETOUR — 80-9919, 80-9710 (R)

(J) EAST STREET — END DETOUR — 80-9919, 80-9708

(K) ROAD CLOSED — 80-9080

(L) SIDEWALK CLOSED — 80-9076

(M) CONSTRUCTION AHEAD SIDEWALK USE RESTRICTED STATE LIABILITY LIMITED GENERAL STATUTES SEC 13a-115, 13a-149 COMMISSIONER OF TRANSPORTATION — 80-1619

(N) SIDEWALK CLOSED CROSS HERE — 80-9075

EAST STREET — 10" — 80-9919
30"
BACKGROUND ORANGE
BLACK LEGEND

SUGGESTED CMS MESSAGE

EAST STREET BRIDGE
FRAME 1
CLOSED STARTING XX/XX/XX
FRAME 2

NOTES:

1. REFER TO THE SPECIAL PROVISIONS AND SPECIFICATIONS "MAINTENANCE AND PROTECTION OF TRAFFIC" AND "PROSECUTION AND PROGRESS" FOR ADDITIONAL REQUIREMENTS.
2. ALL ROADWAY CLOSURES SHALL BE COORDINATED WITH THE CITY OF BRISTOL.
3. ACTUAL LOCATIONS OF SIGNS TO BE DETERMINED BY THE ENGINEER.
4. ALL DETOUR SIGNS TO BE PAID FOR UNDER ITEM NO. 1220027 "CONSTRUCTION SIGNS".
5. CONTRACTOR TO NOTIFY THE ENGINEER, THE CITY OF BRISTOL AND ALL EMERGENCY SERVICES AT LEAST TWO WEEKS PRIOR TO THE ROADWAY CLOSURE.
6. INSTALL CMS TWO WEEKS PRIOR TO START OF DETOUR ON BOTH APPROACHES OF THE BRIDGE.
7. BARRICADE WARNING LIGHTS - HIGH INTENSITY, ITEM NO. 0976002 SHALL BE MOUNTED ON ALL DIAMOND-SHAPED POST MOUNTED CONSTRUCTION SIGNS. REFER TO TRAFFIC STANDARD TR-1220_02.

SIGN SUMMARY

SIGN NO.	SIZE	AREA (S.F.)	QUANTITY
80-9080	48X30	10.0	2
80-9702 (L)	48X18	6.0	1
80-9077	60X30	12.5	1
80-9701 (R)	48X18	6.0	1
31-1120	36X36	9.0	2
80-1613	30X24	5.0	2
80-9919	30X10	2.08	18
80-9933	36X36	9.0	8
80-9710 (S)	30X24	5.0	2
80-9710 (L)	30X24	5.0	3
80-9710 (R)	30X24	5.0	3
80-9708	24X18	3.0	2
80-9076	30X18	3.75	2
80-1619	48X30	10.0	4
80-9075	24X12	2.0	2

TOTAL: 53 SIGNS
279.5 S.F.

REV.	DATE	REVISION DESCRIPTION

DESIGNER/DRAFTER: NAB CHECKED BY: PMB

NOT TO SCALE

SIGNATURE/BLOCK: GM2 ASSOCIATES, INC. 115 GLASTONBURY BLVD. GLASTONBURY, CT 06033

CITY OF BRISTOL

PROJECT NUMBER: 0017-0192
PROJECT DESCRIPTION: REPLACEMENT OF BRIDGE NO. 04487, EAST STREET OVER PEQUABUCK RIVER
TOWN(S): BRISTOL
DRAWING TITLE: DETOUR PLAN

DRAWING NO. DTR-01
SHEET NO. 30

LASTED SAVED BY: NBibeau **FILE NAME:** M:\017_192_East Street_Bristol\330_Design Data\Traffic\TR_CP_0017_0192_DTR.dgn
PLOTTED DATE: 1/22/2024