GENERAL NOTES:

1. POST PLACEMENT WITHIN THE LIMITS OF THE TRANSITION SHOULD BE ADJUSTED TO ACCOMMODATE THE INTRODUCTION OF THE BLOCKOUT WHILE MAINTAINING A SMOOTH RAIL LINE.
2. LATERAL PLACEMENT OF RAIL IN MEDIAN SHALL BE AS SHOWN ON THE PLANS.
3. CROSS SECTION GRADE IN MEDIAN THRU TRANSITION AREA SHALL NOT EXCEED 10:1. AVOID PLACEMENTF RAIL ON CROSS SLOPES STEEPER THAN 6:1. AJUST RAIL HEIGHT WHEN RAIL IS GREATER THAN 2' FROM EDGE OF ROAD.
4. PLACEMENT OF R-B 350 OR APPROPRIATE SYSTEMS ARE BASED ON DEFLECTION REQUIREMENTS FOR FIXED OBJECT. SEE STANDARD SHEET HW-910_04.

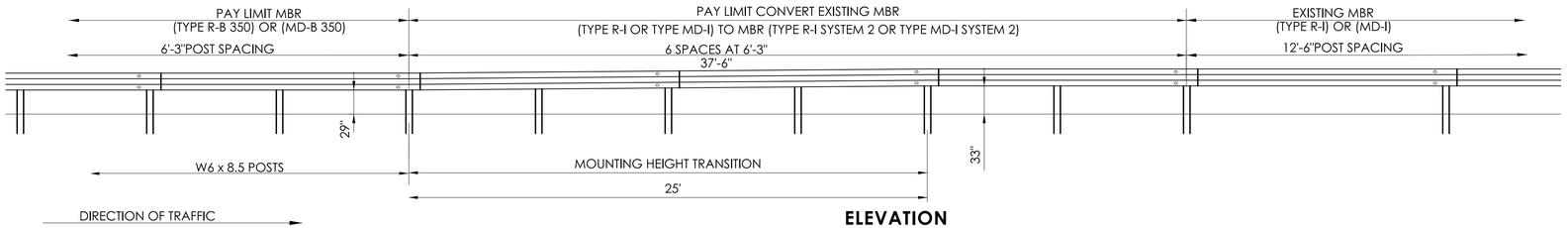

ELEVATION

STRENGTH TRANSITION OF (TYPE R-B 350) TO (TYPE R-I) OR (TYPE MD-B 350) TO (TYPE MD-I)

IN THE DIRECTION OF TRAFFIC

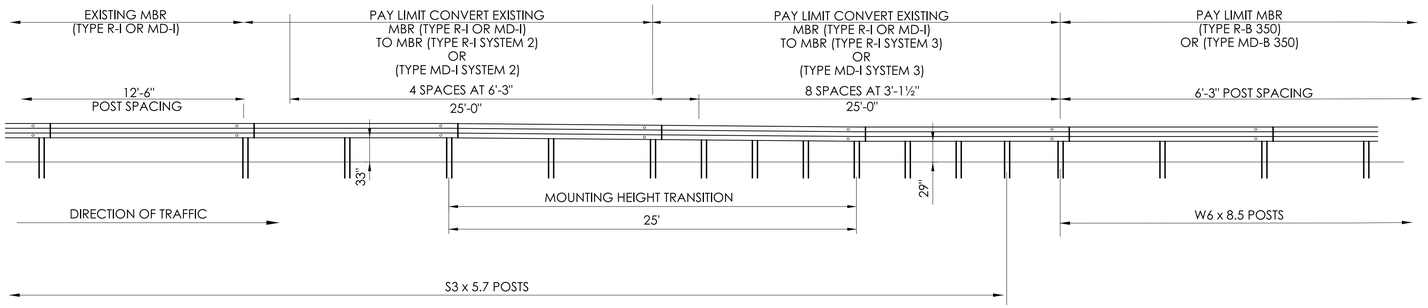

ELEVATION

STRENGTH TRANSITION OF (TYPE R-I) TO (TYPE R-B 350)

IN THE DIRECTION OF TRAFFIC OR

(TYPE MD-I) TO (TYPE MD-B 350)

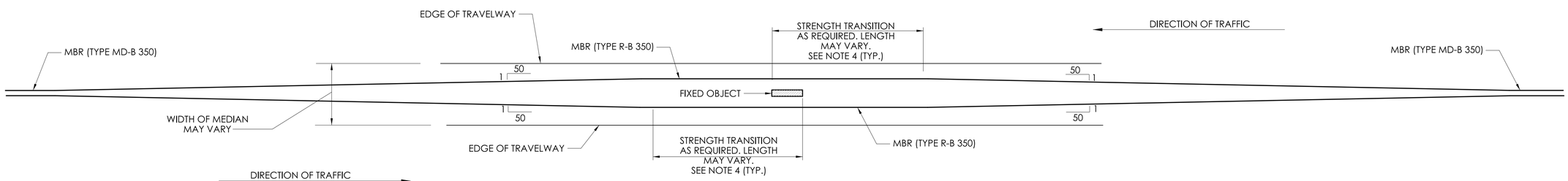

PLAN

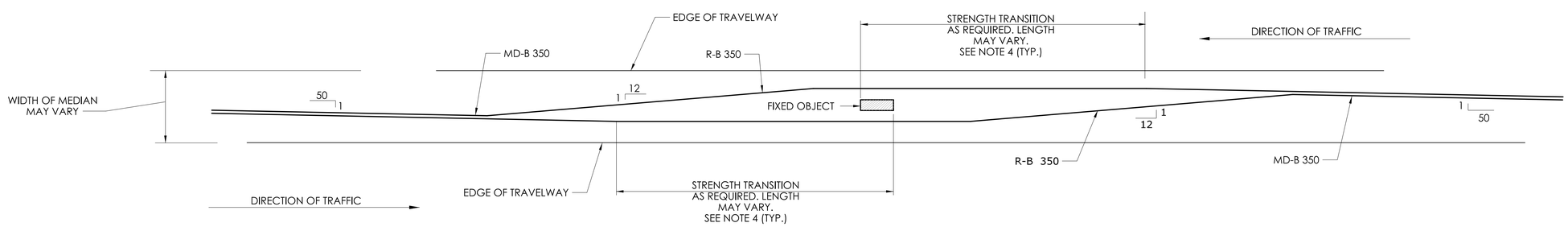

PLAN

TYPICAL MEDIAN GUIDERAIL TRANSITIONS FOR FIXED OBJECT

	NOT TO SCALE	SIGNATURE BLOCK: OFFICE OF ENGINEERING 2800 BERLIN TURNPIKE NEWINGTON, CT 06111	SUBMITTED BY: Digitally signed by Leo Fontaine, P.E. Date: 2022.09.27 15:02:23-04'00'	APPROVED BY: Digitally signed by Calabrese, Michael Date: 2022.11.08 10:10:26-05'00'	STATE OF CONNECTICUT DEPARTMENT OF TRANSPORTATION	CTDOT STANDARD SHEET	STANDARD SHEET TITLE: MISCELLANEOUS GUIDERAIL TRANSITIONS SHEET 2	STANDARD SHEET NO.: HW-910_09b

PLOTTED DATE: 9/21/2022