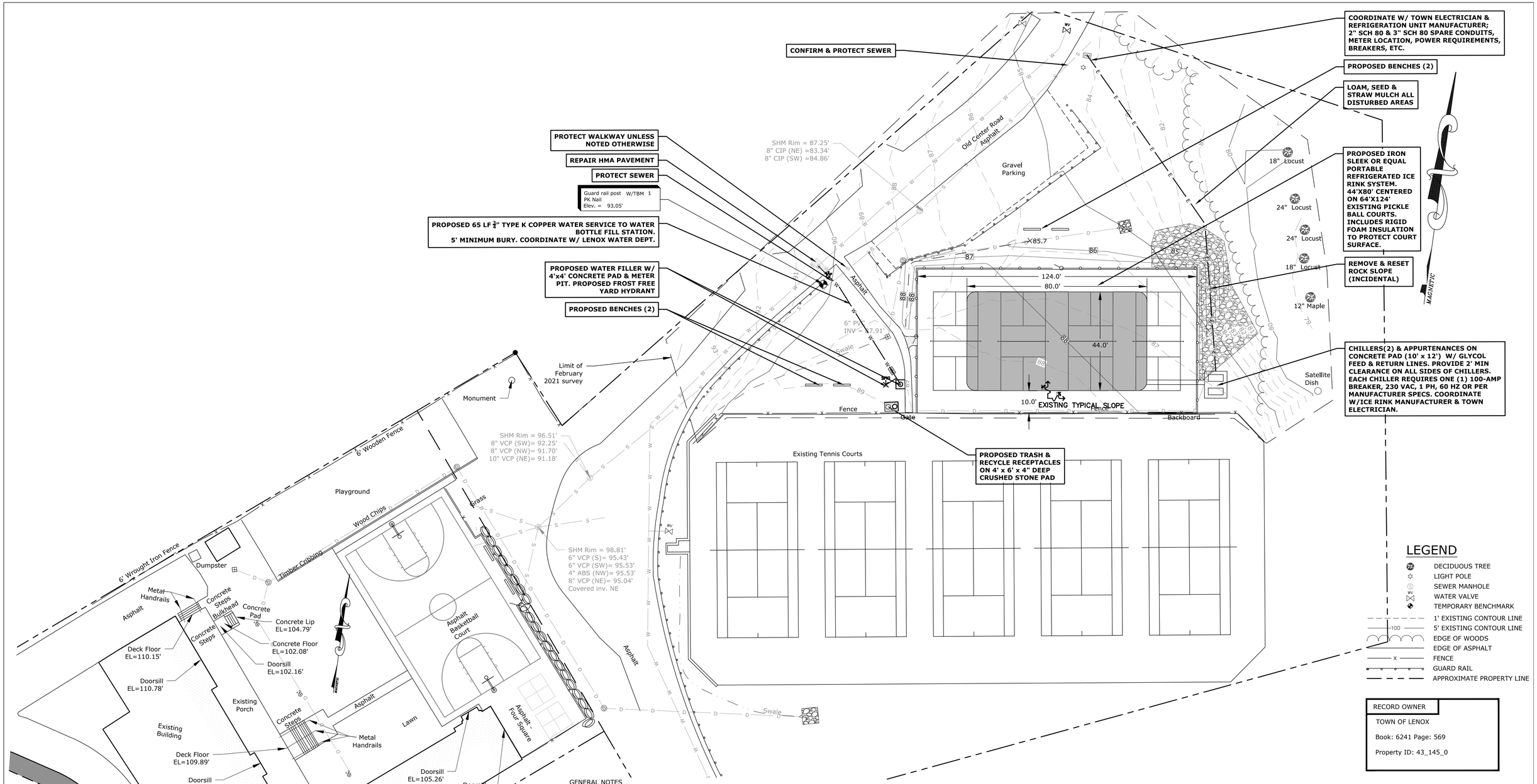

LEGEND

- DECIDUOUS TREE
- LIGHT POLE
- SEWER MANHOLE
- WATER VALVE
- TEMPORARY BENCHMARK
- 1' EXISTING CONTOUR LINE
- 5' EXISTING CONTOUR LINE
- EDGE OF WOODS
- EDGE OF ASPHALT
- FENCE
- GUARD RAIL
- APPROXIMATE PROPERTY LINE

RECORD OWNER
TOWN OF LENOX
Book: 6241 Page: 569
Property ID: 43_145_0

VICINITY MAP

APPROX. SCALE: 1" = 500'

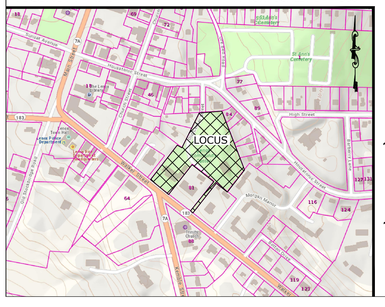

GENERAL NOTES

1. Topographic Survey was performed by Foresight Land Services on February 11, 2021 using Electronic Total Station with Data Collector. Other information from Design Plans dated 5-16-2021 for Pickleball Court Area and not from a recent survey.
2. Plan was compiled on a PC-based computer using AutoCAD Civil 3D 2018.
3. Contours are computer-generated interpolations, edited to generally conform to field observations. Contour interval = 1 (one) foot. Contractor shall verify critical elevations and grades in the field prior to construction.
4. Horizontal Datum is based on local Magnetic.
5. Vertical Datum is assumed. Temporary benchmarks were established on-site, TBM 1 a PK nail in guard rail post elev. 97.68'.
6. The locations and information about underground pipes, utilities or other structures are compiled from available record data and visible field evidence and are not represented as being exact or complete. Prior to beginning excavation, the excavator shall give adequate advance notice to the Dig Safe Center, the municipal and/or state Public Works Department, and private utility companies, to allow for field location of facilities in the vicinity.
7. If Contractor observes any field conditions which vary significantly from what is shown on these plans, the contractor shall immediately notify the Owner and Engineer for resolution of the conflicting information.
8. The Contractor shall record tie measurements, depths, dimensions, materials, field conditions and other pertinent data about all underground pipes, utilities and structures encountered during the work, both existing and constructed. Contractor shall submit Record drawings with this information to the Owner and Engineer prior to completion of the work.
9. Contractor shall immediately report any damage to existing pipes, utilities, or structures to the Owner and Engineer, and obtain directions as to repair, replacement or abandonment.

GRAPHIC SCALE

20 0 10 20 40 80

(IN FEET)
1 inch = 20 ft.

NO.	DATE	REVISION/ISSUE	BY
–	06–18–2025	ISSUE FOR BID ONLY	MAL

SHEET TITLE: REFRIGERATED ICE RINK AT MULTI-USE COURT & RELATED WORK

PROJECT TITLE: LENOX COMMUNITY CENTER
TOWN OF LENOX
65 WALKER STREET
Lenox, MA.

PROJECT NO: E2907
SCALE: 1"=20'
DATE: 6-11-25
DESIGNED BY: MAL
DRAWN BY: MAL
CHECKED BY:
SHEET NO.: SP-1
OF SHEETS
CADFILE NO: E2907D04

FORESIGHT LAND SERVICES
ENGINEERING SURVEYING PLANNING

FORESIGHT LAND SERVICES, INC.
1496 WEST HOUSATONIC STREET - PITTSFIELD, MA 01201
TEL: (413)499-1560 FAX: (413)499-3307 WWW.FORESIGHTLAND.COM

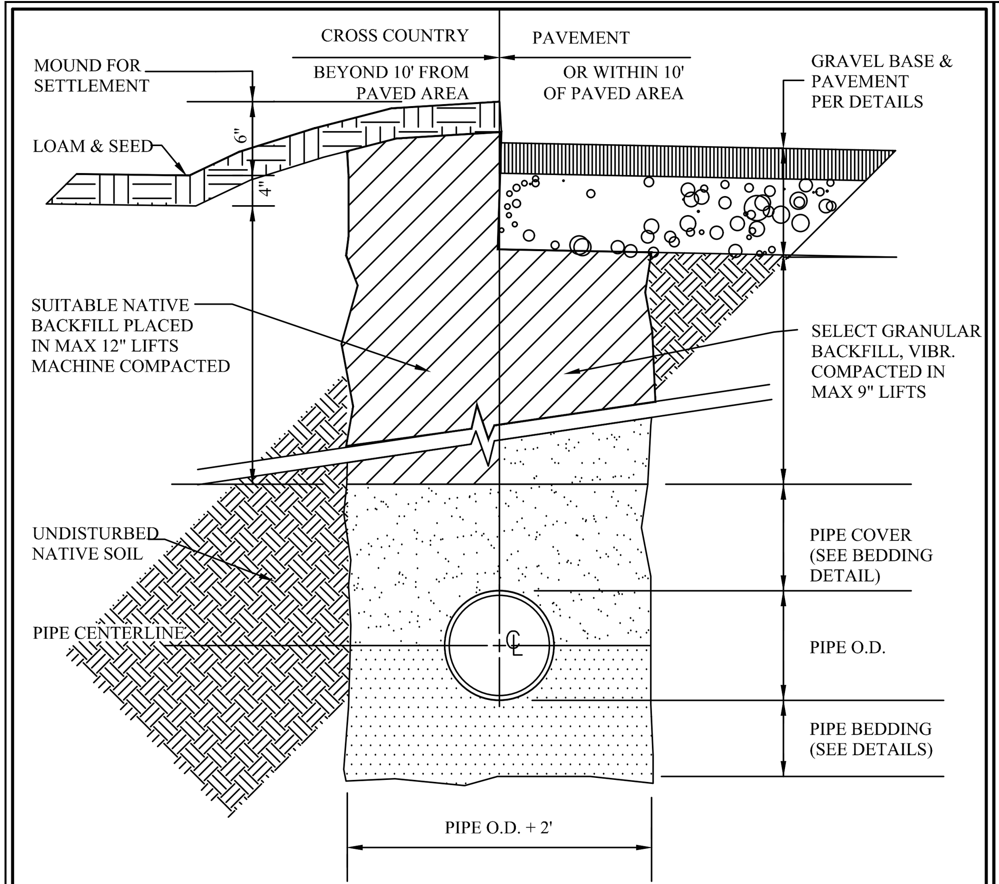

TRENCH CROSS SECTION

34003A
7/6/93
REV# 0

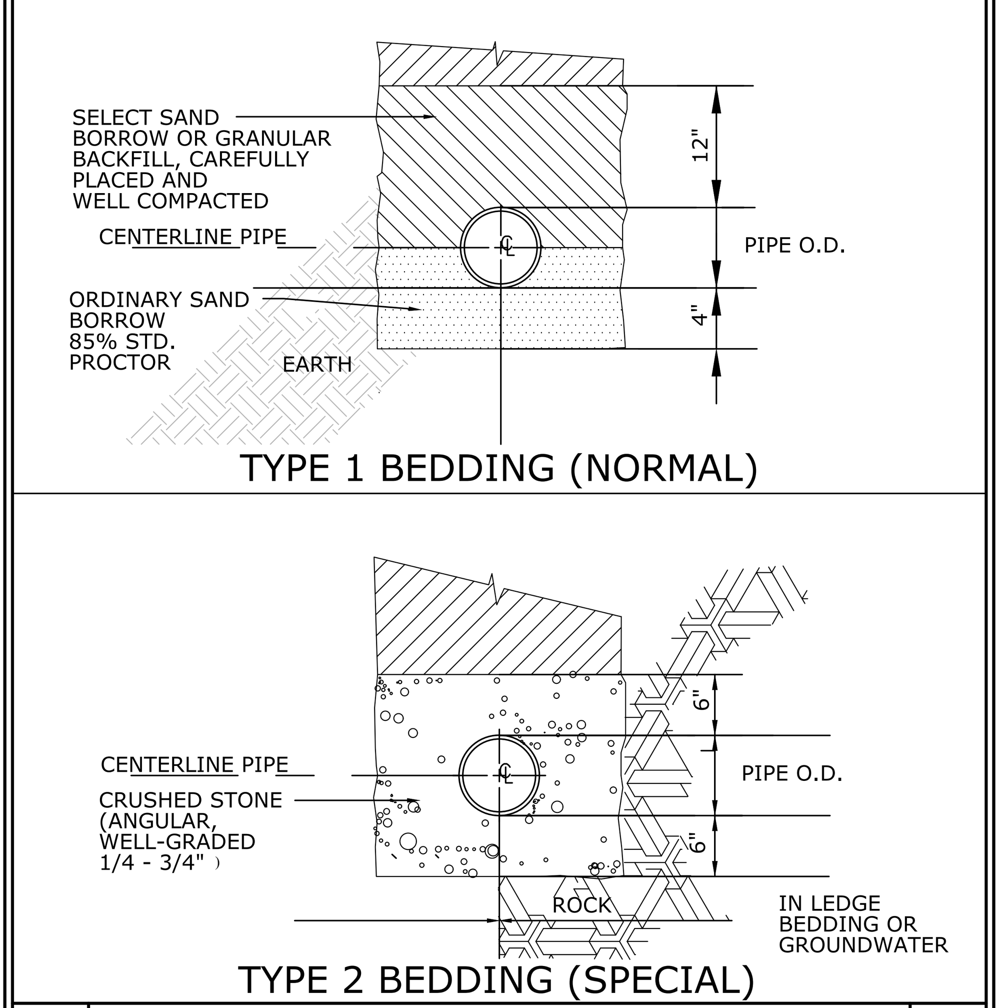

PIPE BEDDING

34004A
1/20/05
REV# 3

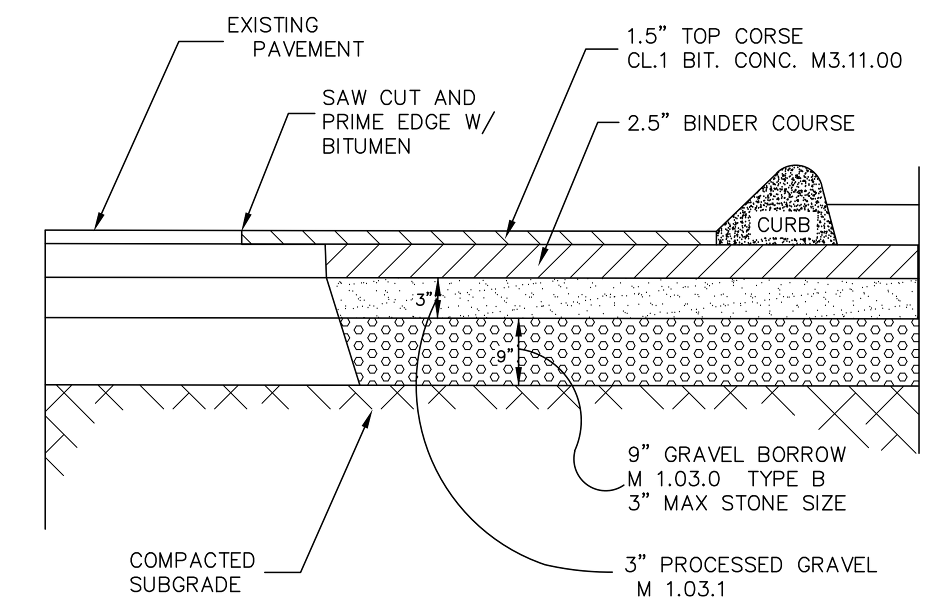

- LIMITS OF PAVEMENT REPAIR SHALL BE REVIEWED BY HIGHWAY SUPT'D AND APPROVED PRIOR TO START OF ANY WORK BY CONTRACTOR.
- CONTRACTOR TO OBTAIN LOCAL PERMIT PRIOR TO WORK IN TOWN WAY AS APPLICABLE.
- PROVIDE TRAFFIC CONTROLS PER TOWN REQ'MTS.
- WORKMANSHIP & MATERIALS TO CONFORM TO MASSHIGHWAY DEPT. STANDARD SPECIFICAITONS FOR HIGHWAYS & BRIDGES UNLESS OTHERWISE SPECIFIED.
- GRAVEL BASE MATERIALS TO BE COMPACTED TO 95% MAS. DRY DENSITY PER ASTM D1557.
- TRENCHES IN PAVED AREAS TO BE COMPACTED IN MAX. 9" LIFTS TO 95% M.D.D.

PAVEMENT REPAIR DETAIL

36038a
01/21/02
REV# 1

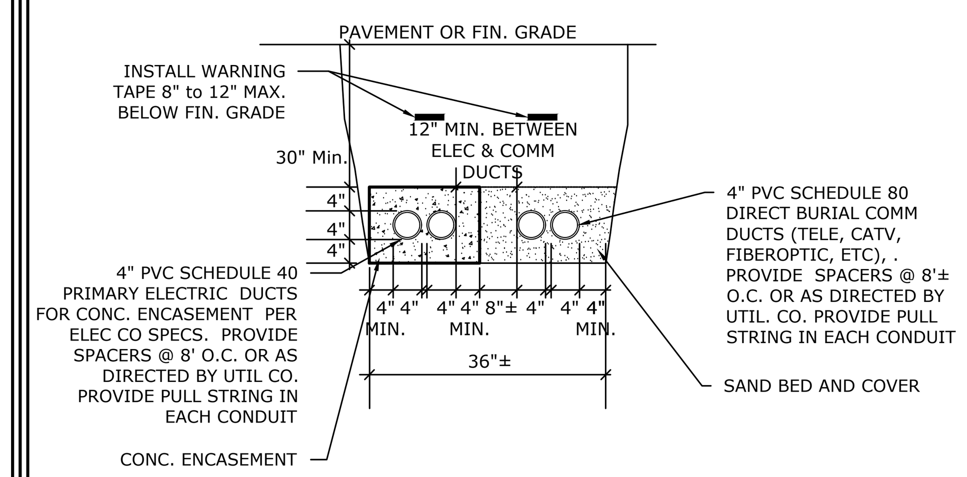

NOTES:
THIS DETAIL IS GENERIC. THE NUMBER AND SIZE OF DUCTS SHALL CONFORM TO THE PLANS AND SPECS AND MAY VARY FROM WHAT IS ILLUSTRATED ABOVE.
INSTALL DUCTS IN ACCORDANCE WITH THE REQUIREMENTS OF THE RESPECTIVE UTILITY COMPANIES. PITCH DUCTS TO DRAIN TO UPSTREAM AND/OR DOWNSTREAM STRUCTURES.
CONCRETE ENCASE ALL PRIMARY ELECTRIC AS REQ'D BY UTILITY CO.
CONCRETE ENCASE SCH. 40 OR INSTALL SCH. 80 DIRECT BURY DUCT FOR SECONDARY ELECTRIC UNDER PAVEMENTS OR GRAVEL ROADWAYS & DRIVES.
MAINTAIN SEPARATION BETWEEN ADJACENT CONC. ENCASEMENTS. I.E. DO NOT COMBINE.
MAINTAIN MIN. 12" VERTICAL SEPARATION BETWEEN ELEC & COMM DUCTS WHERE THEY MUST CROSS.
MAINTAIN MIN. 24" HORIZONTAL SEPARATION BETWEEN PRIMARY ELEC DUCT AND WATER, SEWER OR GAS LINES.

ELEC AND COMM DUCT BANK

35504B
3/29/2016
REV# 1

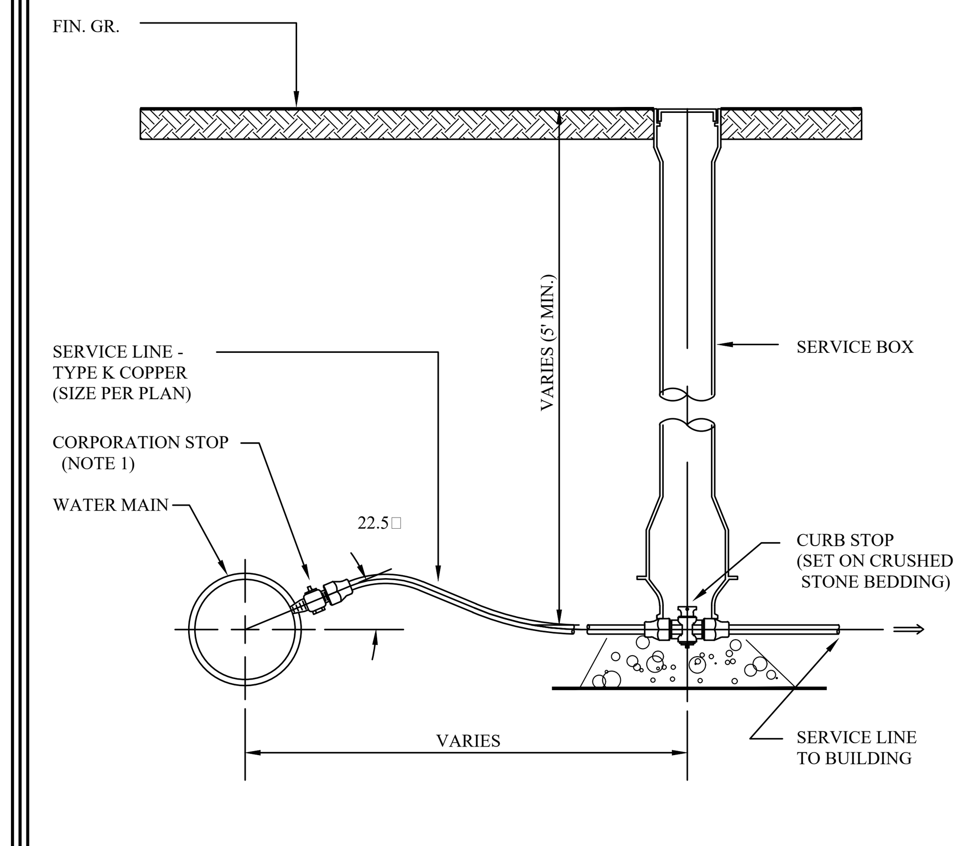

NOTES
1. CORPORATION STOP SHALL BE INSTALLED IN MAIN BY DIRECT DRILLING AND TAPPING, PROVIDED THAT PIPE SIZE, WALL THICKNESS AND CONDITION PROVIDE ADEQUATE FULL THREADS. OTHERWISE, INSTALLATION SHALL USE SERVICE CLAMPS, SADDLES OR TEES
2. CORP STOPS SHALL BE SPACED AT LEAST 2 FEET APART.
3ALL MATERIALS AND METHODS SHALL CONFORM TO MUNICIPAL STANDARD.

WATER SERVICE CONNECTION

34008A
7/6/93
REV# 0

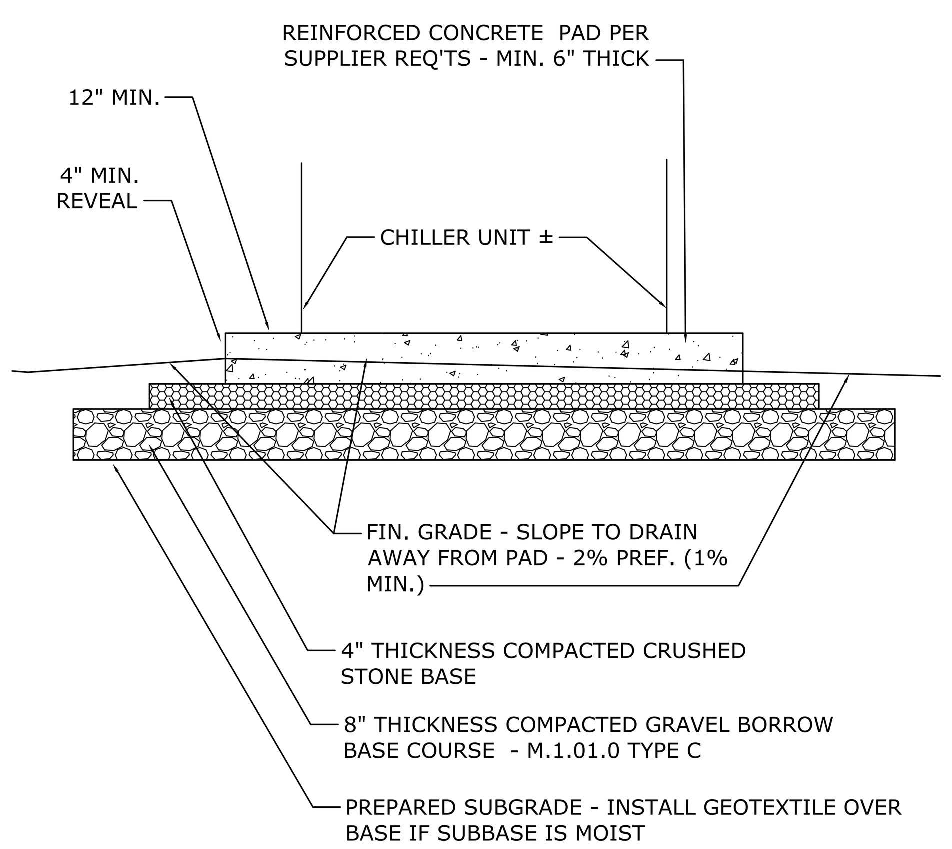

CONCRETE PAD

3/22/17
0

SMITH® JAY R. SMITH MFG. CO.®
MEMBER OF MORRIS GROUP INTERNATIONAL
POST OFFICE BOX 3237
MONTGOMERY, ALABAMA 36109-0237 (USA)
TEL: 334-277-8520 FAX: 888-377-7818 www.jrsmith.com
CUSTOMER DRIVEN SINCE 1926
MEMBER OF:
LOCATION

NON-FREEZE POST HYDRANT

DRAWING NUMBER: S5909 | SIZE: A | SCALE: NONE | DATE: 9-25-90 | APPROVED BY: CR | CHECKED BY: BS | DRAWN BY: EMB

WE CAN ASSUME NO RESPONSIBILITY FOR USE OF SUPERSEDED OR VOID DATA
DIMENSIONS ARE SUBJECT TO MANUFACTURERS TOLERANCE AND CHANGE WITHOUT NOTICE

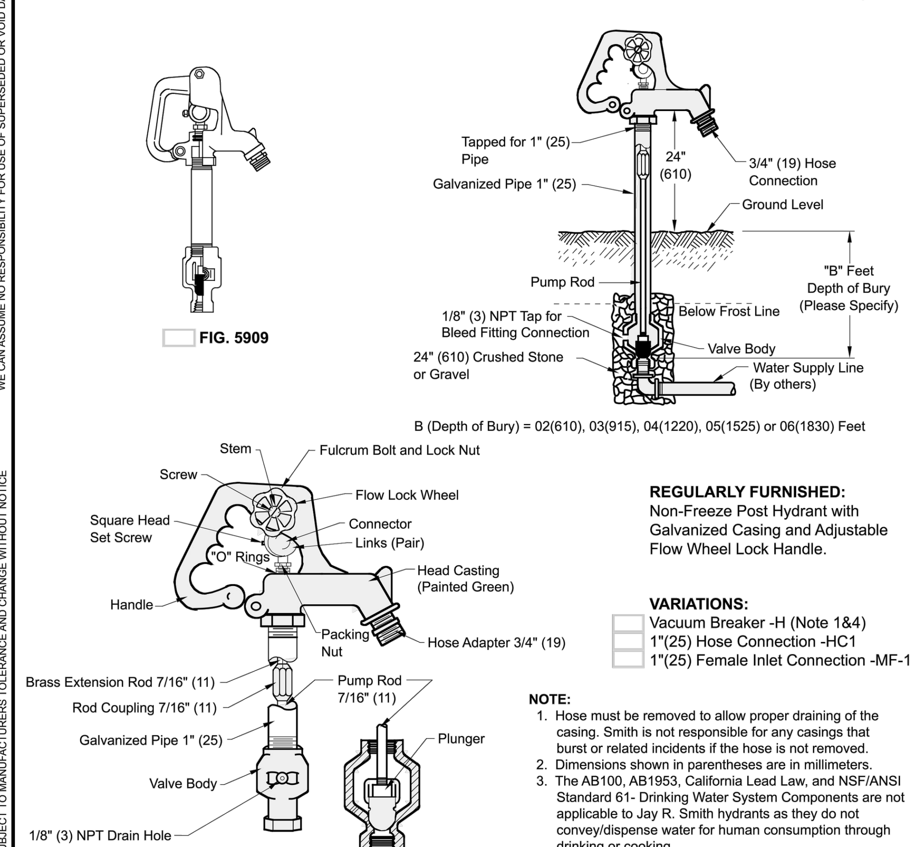

B (Depth of Bury) = 02(610), 03(915), 04(1220), 05(1525) or 06(1830) Feet

REGULARLY FURNISHED:
Non-Freeze Post Hydrant with Galvanized Casing and Adjustable Flow Wheel Lock Handle.

VARIATIONS:
- Vacuum Breaker -H (Note 1&4)
- 1"(25) Hose Connection -HC1
- 1"(25) Female Inlet Connection -MF-1

NOTE:
1. Hose must be removed to allow proper draining of the casing. Smith is not responsible for any casings that burst or related incidents if the hose is not removed.
2. Dimensions shown in parentheses are in millimeters.
3. The AB100, AB1953, California Lead Law, and NSF/ANSI Standard 61- Drinking Water System Components are not applicable to Jay R. Smith hydrants as they do not convey/dispense water for human consumption through drinking or cooking.
4. Vacuum breaker not available with 1"(25) Hose Connection Adaptor -HC1.
5. **FOR IRRIGATION PURPOSES ONLY.**
6. Temperature Range: 33.0°F to 140.0°F (0.6°C to 60.0°C).

REV.	DATE	DESCRIPTION	BY	CKD. BY
V	2-4-25	Revised Notes	HS	BW
U	10-18-24	Revised Notes	HS	CL
T	8-4-23	Removed Function	HS	CL
S	3-22-23	Removed Notes 5 & 6 ASL/TL	KK	JT

WEIGHT POUNDS | VOLUME CUBIC FEET | FIGURE NUMBER **5909**

FIGURE NUMBER 5909

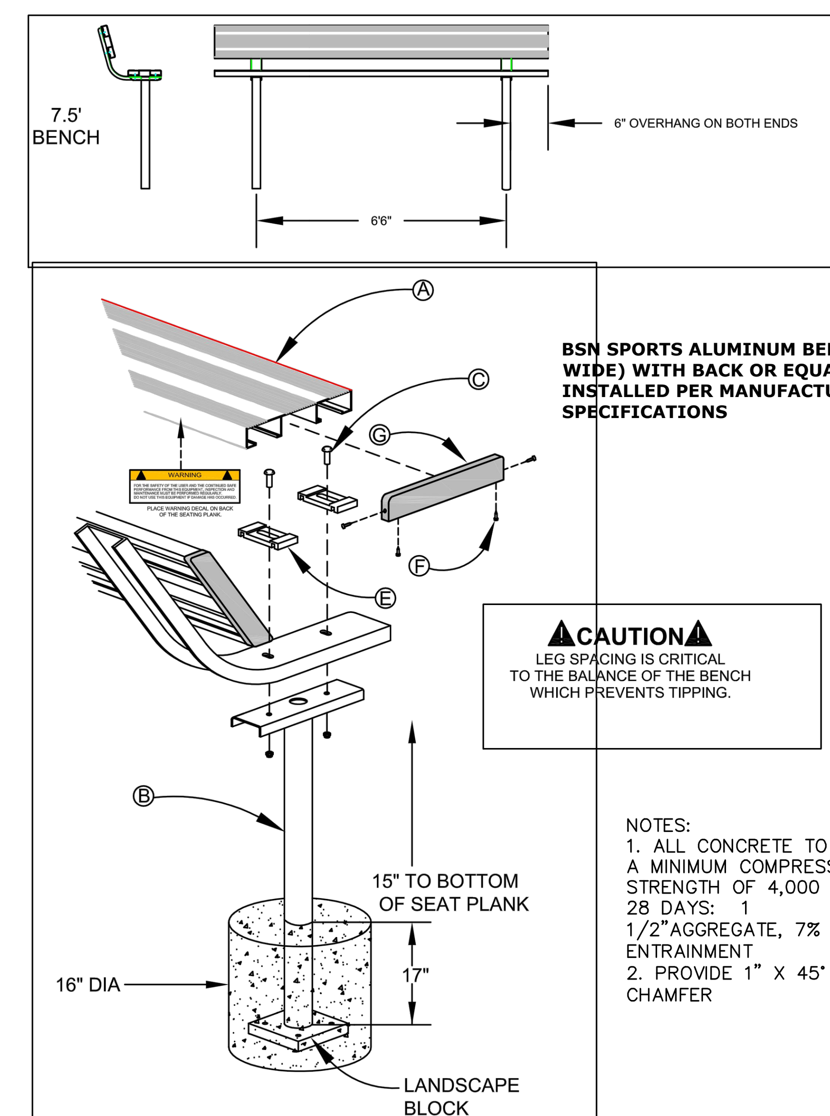

BSN SPORTS ALUMINUM BENCH (10" WIDE) WITH BACK OR EQUAL INSTALLED PER MANUFACTURER SPECIFICATIONS

⚠CAUTION⚠
LEG SPACING IS CRITICAL TO THE BALANCE OF THE BENCH WHICH PREVENTS TIPPING.

NOTES:
1. ALL CONCRETE TO HAVE A MINIMUM COMPRESSIVE STRENGTH OF 4,000 PSI AT 28 DAYS: 1
1/2"AGGREGATE, 7% AIR ENTRAINMENT
2. PROVIDE 1" X 45° CHAMFER

ITEM	DESCRIPTION	ITEM	DESCRIPTION
A	SEAT PLANK	E	BOLT CLIP
B	BENCH LEGS	F	PAN HEAD TEK SCREW #8 X .75
C	CARRIAGE BOLT .312 X 1.25	G	END CAP
D	LOCKING FLANGE NUT .312	H	RUBBER CAP

BENCH & BASE DETAILS

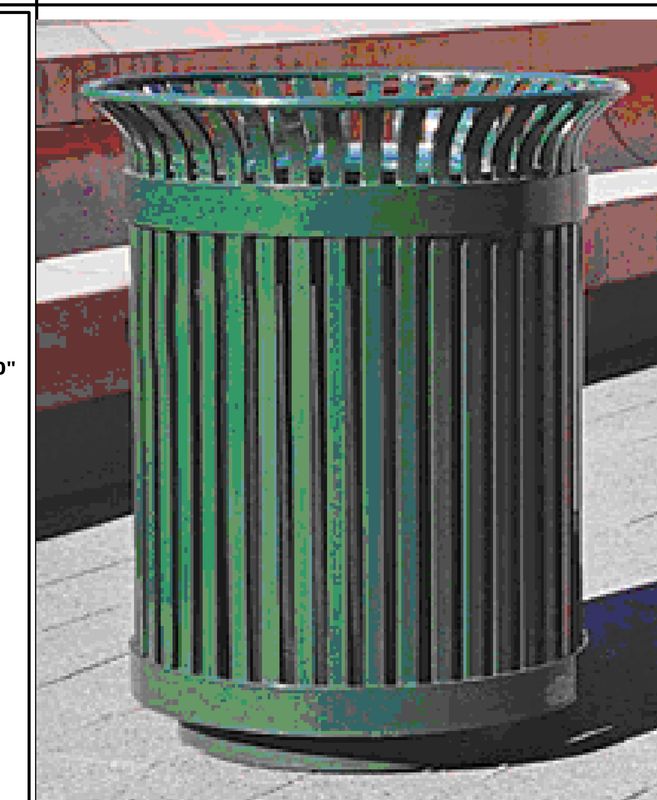

Trash Container: S-424 Ironsites, 36 gallon receptacle, tapered formed lid, black plastic liner, VS Tavern Square Green
Victor Stanley, Inc.
P.O. Drawer 330
2103 Brickhouse Rd.
Dukirk, MD 20754
800-368-2573
www.victorstanley.com

VICTOR STANLEY, INC.
-Manufacturers of Quality Site Furnishings since 1962-

P.O. DRAWER 330 - DUNKIRK, MD 20754 USA
TOLL FREE: (800) 368-2573 (USA & CANADA)
TEL (301) 855-8300 - FAX (410) 257-7579
WEB SITE: HTTP://WWW.VICTORSTANLEY.COM

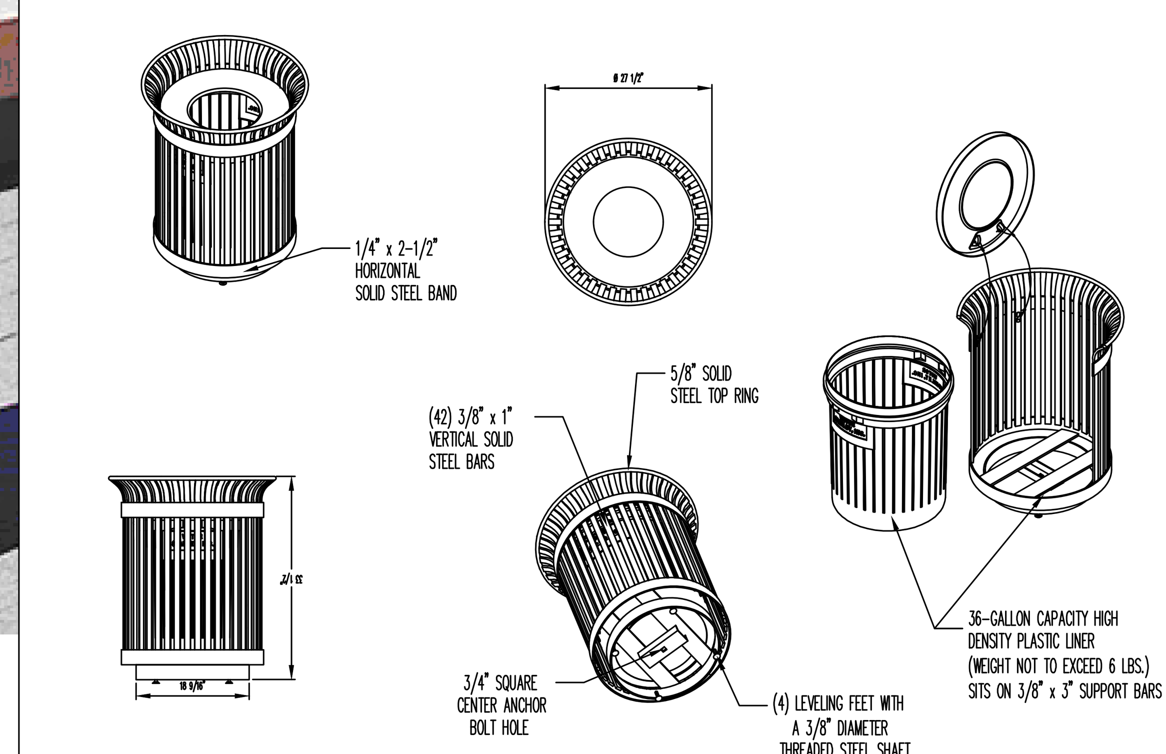

AVAILABLE OPTIONS:
POWDER COATING
10 STANDARD COLORS, CUSTOM COLORS (INCLUDING THE RAL RANGE).
CUSTOM PLAQUES & DECALS
AVAILABLE WITH STEEL PLAQUES IN VARIOUS SIZES AND PRESSURE SENSITIVE VINYL OUTDOOR DECALS.

LIDS
STANDARD TAPERED FORMED LID (AS SHOWN). AVAILABLE WITH OPTIONAL S-2A FORMED DOME, S-2A FORMED DOME WITH STAINLESS STEEL ASHTRAY, AND DS-32 FORMED DOME WITH SELF-CLOSING DOOR.
SECURITY
LID IS SECURED WITH VINYL COATED GALVANIZED STEEL AIRCRAFT CABLE. CABLE IS LOOPED AROUND WELDED IN PLACE ATTACHMENT BRACKETS AND CRIMPED IN PLACE. AVAILABLE WITH OPTIONAL MOUNT WITH 3 IN-LINE ANCHOR HOLES AND OPTIONAL BOTTOM PLATE COVER.

NOTES:
1. DRAWINGS NOT TO SCALE. DO NOT SCALE DRAWINGS.
2. ALL FABRICATED METAL COMPONENTS ARE STEEL SHOTBLASTED, ETCHED, PHOSPHATIZED, PREHEATED, AND ELECTROSTATICALLY POWDER-COATED WITH T.G.I.C. POLYESTER POWDER COATINGS. PRODUCTS ARE FULLY CLEANED AND PRETREATED, PREHEATED AND COATED WHILE HOT TO FILL CREVICES AND BUILD FILM COATING. COATED PARTS ARE THEN FULLY CURED TO COATING MANUFACTURER'S SPECIFICATIONS. THE THICKNESS OF THE RESULTING FINISH AVERAGES 8-10 MILS (200-250 MICRONS).
3. THIS VICTOR STANLEY, INC. PRODUCT MUST BE PERMANENTLY AFFIXED TO THE GROUND. CONSULT YOUR LOCAL CODES FOR REGULATIONS.
4. VICTOR STANLEY, INC., PLASTIC INNER LINERS ARE MOLDED ON TOOLING DESIGNED FOR AND OWNED BY VICTOR STANLEY, INC. THEY OFFER MAXIMUM CAPACITY AND STRENGTH WITH LIGHTWEIGHT CONSTRUCTION USING CRITICAL MOLDED RIBS, INTEGRAL HANDHOLDS, AND HIGH-STRENGTH MATERIALS. THIS MINIMIZES HANDLING DIFFICULTY AND FACILITATES EASY EMPTYING AND STORAGE WHILE AFFORDING LONG SERVICE LIFE.
5. ANCHOR BOLT NOT PROVIDED BY VICTOR STANLEY, INC.
6. FOR HIGH SALT ABUSIVE CLIMATES, HOT DIP GALVANIZING BEFORE POWDER COATING IS AVAILABLE. SEE WRITTEN SPECIFICATIONS FOR DETAILS.
7. ALL SPECIFICATIONS ARE SUBJECT TO CHANGE. CONTACT MANUFACTURER FOR DETAILS.
8. THIS PRODUCT IS SHIPPED FULLY ASSEMBLED.

S-424
IRONSITES SERIES®
36-GALLON LITTER RECEPTACLE
SHOWN: STANDARD TAPERED FORMED LID

COPYRIGHT 2007 VICTOR STANLEY, INC. ALL RIGHTS RESERVED
REV. 7/16/07 DRAWN M.C.W. 2007-252

NO.	DATE	REVISION/ISSUE	BY
–	06-18-2025	ISSUE FOR BID ONLY	MAL

SHEET TITLE
REFRIGERATED ICE RINK
AT MULTI-USE COURT
& RELATED WORK - DETAILS

PROJECT TITLE
LENOX COMMUNITY CENTER
TOWN OF LENOX
65 WALKER STREET
Lenox, MA.

PROJECT NO. E2907
SCALE 1"=20'
DATE 6-11-25
DESIGNED BY MAL
DRAWN BY MAL
CHECKED BY
SHEET NO. SP-2
___OF___SHEETS
CADFILE NO: E2907D04

FORESIGHT LAND SERVICES
ENGINEERING SURVEYING PLANNING
FORESIGHT LAND SERVICES, INC.
1496 WEST HOUSATONIC STREET - PITTSFIELD, MA 01201
TEL: (413) 499-1560 FAX: (413) 499-3307 WWW.FORESIGHTLAND.COM