SUBSET 4 - STRUCTURE
INDEX OF DRAWINGS

DRAWING NUMBER	DRAWING TITLE	DRAWING NUMBER	DRAWING TITLE
INX-01	INDEX OF DRAWINGS	S-16	DECK UNIT DETAILS - 2
S-01	GENERAL PLAN AND ELEVATION	S-17	DECK UNIT DETAILS - 3
S-02	TYPICAL SECTION	S-18	BEARING DETAILS - 1
S-03	STRUCTURE LAYOUT PLAN	S-19	BEARING DETAILS - 2
S-04	BORING LOGS - 1	S-20	DECK PLAN
S-05	BORING LOGS - 2	S-21	DECK DETAILS
S-06	BORING LOGS - 3	S-22	APPROACH SLAB PLAN
S-07	BORING LOGS - 4	S-23	ASPHALTIC PLUG EXPANSION JOINT NOTES AND DETAILS - 1
S-08	NOTES AND VERTICAL PROFILE	S-24	ASPHALTIC PLUG EXPANSION JOINT NOTES AND DETAILS - 2
S-09	CONSTRUCTION PLAN - 1	S-25	WALLS PLAN AND ELEVATION - 1
S-10	CONSTRUCTION PLAN - 2	S-26	WALLS PLAN AND ELEVATION - 2
S-11	ABUTMENT 1 PLAN, ELEVATION, AND SECTION	S-27	TYPICAL WALL DETAILS
S-12	ABUTMENT 2 PLAN, ELEVATION, AND SECTION	S-28	SINGLE SLOPE PARAPET DETAILS
S-13	ABUTMENT DETAILS	S-29	SINGLE SLOPE PARAPET REINFORCEMENT
S-14	FRAMING PLAN AND DECK UNIT DATA		
S-15	DECK UNIT DETAILS - 1		

DESIGNED BY:
PRIME AE GROUP, INC.
100 GREAT MEADOW ROAD
6TH FLOOR
WETHERSFIELD, CT 06109

STATE OF CONNECTICUT
STANLEY A. NALITZ
37619
LICENSED
PROFESSIONAL ENGINEER

Digitally signed by Stanley A Nalitz
Date: 2025.04.21 18:32:10-04'00'

REV.	DATE	REVISION DESCRIPTION

SIGNATURE BLOCK:

L. PEÑA — DESIGNER/DRAFTER:

M. MCCLUSKEY — CHECKED BY:

PRIME AE
100 GREAT MEADOW ROAD
WETHERSFIELD, CT 06109

CTDOT — CONNECTICUT DEPARTMENT OF TRANSPORTATION

PROJECT TITLE: REPLACEMENT OF BRIDGE NO. 02698 CARRYING ROUTE 149 (EAST HADDAM MOODUS ROAD) OVER DYKAS BROOK

TOWN(S): EAST HADDAM

DRAWING TITLE: INDEX OF DRAWINGS

PROJECT NO.: 0040-0148

DRAWING NO.: INX-01

SHEET NO.: 04-01

LASTED SAVED BY: lpena **FILE NAME:** c:\pw-wkrdir\primeeng-pw-01\ct - luis pena\dms07112\SB_CP_0040_0148_StrBorder.dgn
PLOTTED DATE: 4/21/2025

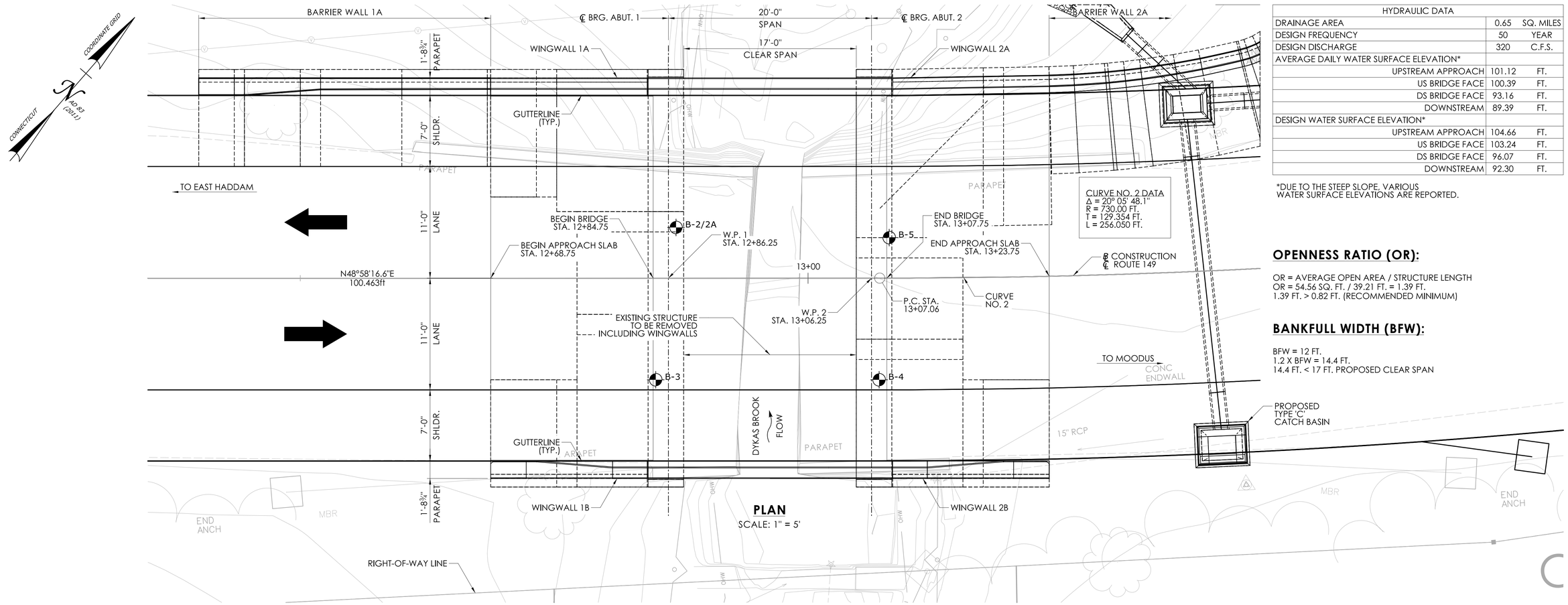

PLAN
SCALE: 1" = 5'

HYDRAULIC DATA		
DRAINAGE AREA	0.65	SQ. MILES
DESIGN FREQUENCY	50	YEAR
DESIGN DISCHARGE	320	C.F.S.
AVERAGE DAILY WATER SURFACE ELEVATION*		
UPSTREAM APPROACH	101.12	FT.
US BRIDGE FACE	100.39	FT.
DS BRIDGE FACE	93.16	FT.
DOWNSTREAM	89.39	FT.
DESIGN WATER SURFACE ELEVATION*		
UPSTREAM APPROACH	104.66	FT.
US BRIDGE FACE	103.24	FT.
DS BRIDGE FACE	96.07	FT.
DOWNSTREAM	92.30	FT.

*DUE TO THE STEEP SLOPE, VARIOUS WATER SURFACE ELEVATIONS ARE REPORTED.

OPENNESS RATIO (OR):

OR = AVERAGE OPEN AREA / STRUCTURE LENGTH
OR = 54.56 SQ. FT. / 39.21 FT. = 1.39 FT.
1.39 FT. > 0.82 FT. (RECOMMENDED MINIMUM)

BANKFULL WIDTH (BFW):

BFW = 12 FT.
1.2 X BFW = 14.4 FT.
14.4 FT. < 17 FT. PROPOSED CLEAR SPAN

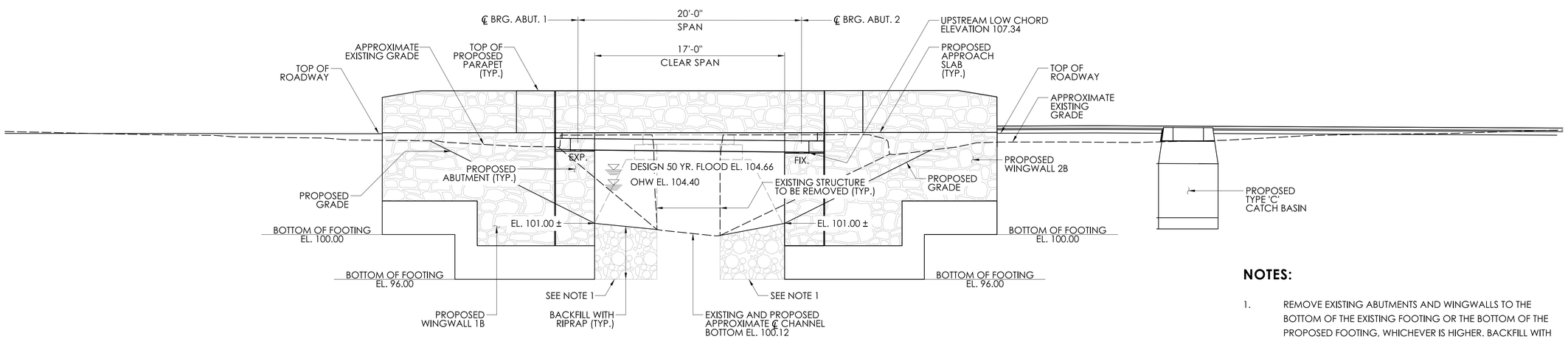

INLET ELEVATION
SCALE: 1" = 5'

NOTES:

1. REMOVE EXISTING ABUTMENTS AND WINGWALLS TO THE BOTTOM OF THE EXISTING FOOTING OR THE BOTTOM OF THE PROPOSED FOOTING, WHICHEVER IS HIGHER. BACKFILL WITH RIPRAP TO ELEVATION 101.00 AT PROPOSED ABUTMENTS IF REQUIRED. RIPRAP SHALL BE INTERMEDIATE RIPRAP AND SHALL BE PLACED ALONG THE FULL LENGTH OF THE ABUTMENTS AS NEEDED.

REV.	DATE	REVISION DESCRIPTION

SIGNATURE BLOCK:
DESIGNER/DRAFTER: L. PEÑA
CHECKED BY: M. MCCLUSKEY

PRIME AE, 100 GREAT MEADOW ROAD, WETHERSFIELD, CT 06109

CTDOT — CONNECTICUT DEPARTMENT OF TRANSPORTATION

PROJECT TITLE: REPLACEMENT OF BRIDGE NO. 02698 CARRYING ROUTE 149 (EAST HADDAM MOODUS ROAD) OVER DYKAS BROOK

TOWN(S): EAST HADDAM

DRAWING TITLE: GENERAL PLAN AND ELEVATION

PROJECT NO.: 0040-0148

DRAWING NO.: S-01

SHEET NO.: 04-02

LASTED SAVED BY: lpena FILE NAME: c:\pw-wkrdir\primeeng-pw-01\ct - luis pena\dms07112\SB_CP_0040_0148_StrBorder.dgn
PLOTTED DATE: 4/21/2025

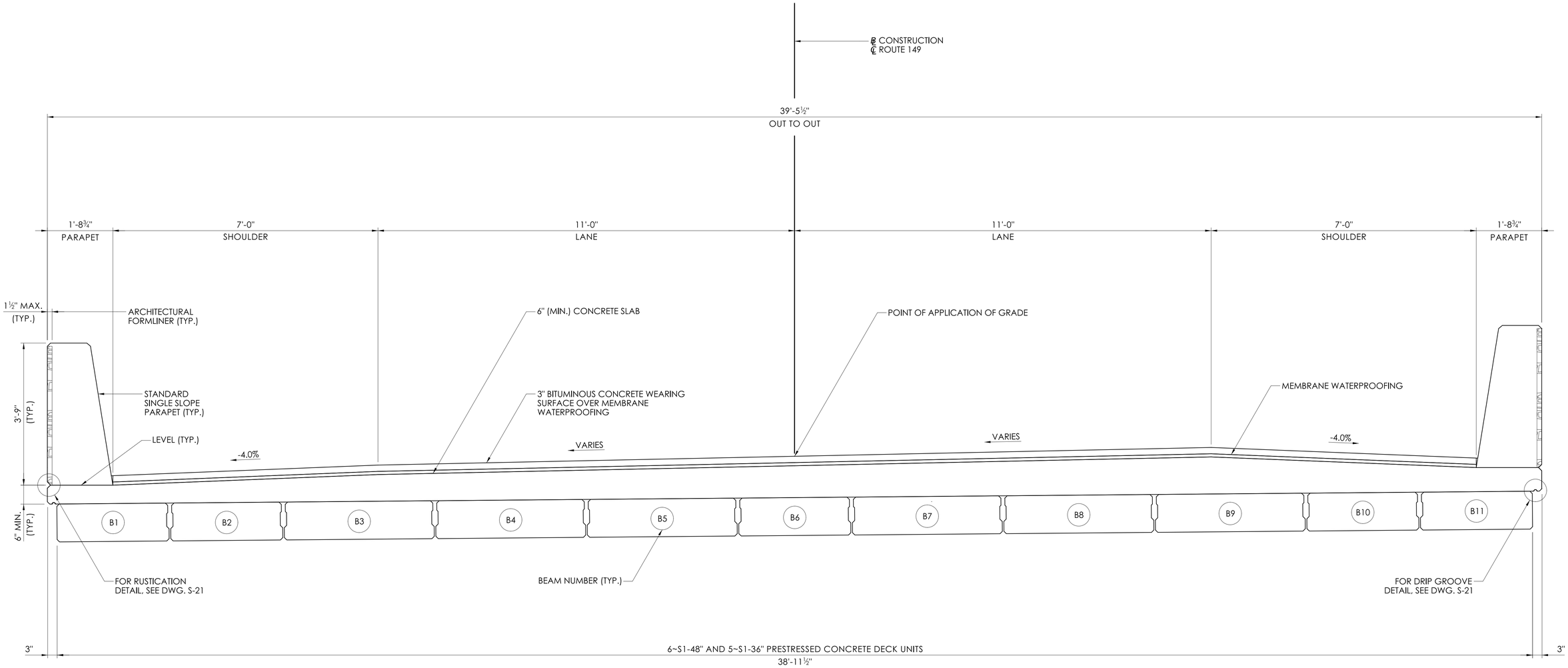

TYPICAL SECTION

SCALE: ¾" = 1'-0"

NOTES:

1. FOR DECK SLAB DETAILS, SEE DWG. S-21.
2. ARCHITECTURAL FORMLINER SHALL BE NORTHEAST DRYSTACK PATTERN. FORMLINER TO BE PAID UNDER ARCHITECTURAL FORMLINER.
3. FOR DECK UNIT DATA AND DETAILS, SEE DWGS. S-14 TO S-17.

REV.	DATE	REVISION DESCRIPTION

SIGNATURE BLOCK:

L. PEÑA — DESIGNER/DRAFTER:

M. MCCLUSKEY — CHECKED BY:

PRIME AE, 100 GREAT MEADOW ROAD, WETHERSFIELD, CT 06109

CTDOT — CONNECTICUT DEPARTMENT OF TRANSPORTATION

PROJECT TITLE: REPLACEMENT OF BRIDGE NO. 02698 CARRYING ROUTE 149 (EAST HADDAM MOODUS ROAD) OVER DYKAS BROOK

TOWN(S): EAST HADDAM

DRAWING TITLE: TYPICAL SECTION

PROJECT NO.: 0040-0148

DRAWING NO.: S-02

SHEET NO.: 04-03

LASTED SAVED BY: lpena **FILE NAME:** c:\pw-wkrdir\primeeng-pw-01\c1 - luis pena\dms07112\SB_CP_0040_0148_StrBorder.dgn
PLOTTED DATE: 4/21/2025

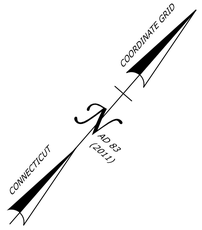

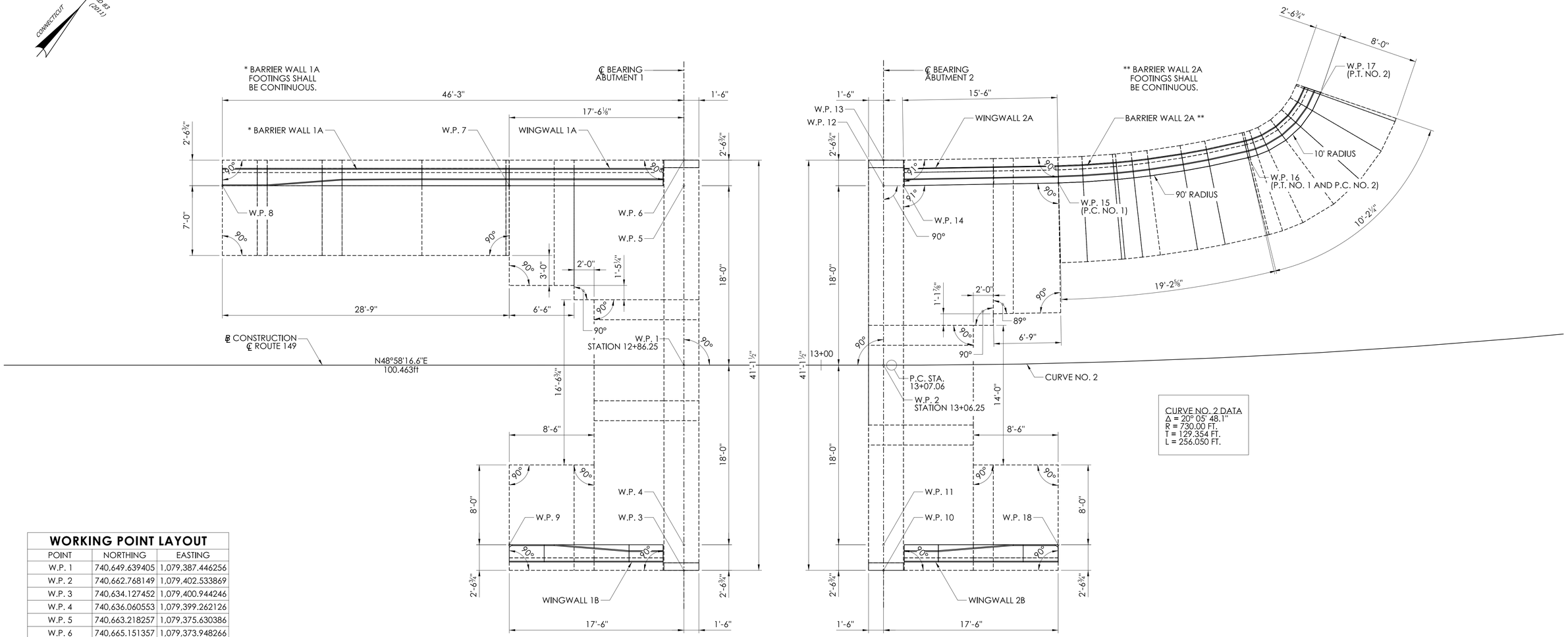

CURVE NO. 2 DATA
Δ = 20° 05' 48.1"
R = 730.00 FT.
T = 129.354 FT.
L = 256.050 FT.

WORKING POINT LAYOUT		
POINT	NORTHING	EASTING
W.P. 1	740,649.639405	1,079,387.446256
W.P. 2	740,662.768149	1,079,402.533869
W.P. 3	740,634.127452	1,079,400.944246
W.P. 4	740,636.060553	1,079,399.262126
W.P. 5	740,663.218257	1,079,375.630386
W.P. 6	740,665.151357	1,079,373.948266
W.P. 7	740,651.730605	1,079,362.428725
W.P. 8	740,632.858035	1,079,340.740281
W.P. 9	740,624.572902	1,079,386.060465
W.P. 10	740,647.256197	1,079,416.031860
W.P. 11	740,649.189297	1,079,414.349739
W.P. 12	740,676.345904	1,079,390.718954
W.P. 13	740,678.280101	1,079,389.035879
W.P. 14	740,677.658778	1,079,392.227716
W.P. 15	740,688.055734	1,079,403.763073
W.P. 16	740,702.459533	1,079,416.438637
W.P. 17	740,712.140114	1,079,417.626918
W.P. 18	740,660.676949	1,079,427.551401

STRUCTURE LAYOUT PLAN

SCALE: 1" = 5'

REV.	DATE	REVISION DESCRIPTION

SIGNATURE BLOCK:
L. PEÑA — DESIGNER/DRAFTER:
M. MCCLUSKEY — CHECKED BY:

PRIME AE
100 GREAT MEADOW ROAD
WETHERSFIELD, CT 06109

CTDOT
CONNECTICUT DEPARTMENT OF TRANSPORTATION

PROJECT TITLE:
REPLACEMENT OF BRIDGE NO. 02698 CARRYING ROUTE 149 (EAST HADDAM MOODUS ROAD) OVER DYKAS BROOK

TOWN(S): EAST HADDAM

DRAWING TITLE: STRUCTURE LAYOUT PLAN

PROJECT NO.: 0040-0148

DRAWING NO.: S-03
SHEET NO.: 04-04

LASTED SAVED BY: lpena **FILE NAME:** c:\pw-wkrdir\primeeng-pw-01\ct - luis pena\dms07112\S8_CP_0040_0148_StrBorder.dgn
PLOTTED DATE: 4/21/2025

Driller:	Mike St. John	**Connecticut DOT Boring Report**		Hole No.:	B-1
Inspector:	G. Jacobsen	Town:	East Haddam, CT	Stat./Offset:	12+29/7 L
Engineer:	C. Palmer	Project No.:	40386.02	Northing:	740613
Start Date:	6-28-23	Route No.:	Rt 149	Easting:	1079332.1
Finish Date:	6-28-23	Bridge No.:	02698	Surface Elevation:	109.1
Project Description:	Replacement of Bridge 02698 carrying Rt. 149 over Dykas Brook				
Casing Size/Type:	3" ID	Sampler Type/Size:	2" OD	Core Barrel Type:	NX
Hammer Wt.:	300lb Fall: 30in.	Hammer Wt.:	140lb Fall: 30in.		
Groundwater Observations:					

Depth (ft)	Sample Type/No.	Blows on Sampler per 6 inches	Pen. (in.)	Rec. (in.)	RQD %	Generalized Strata Description	Material Description and Notes	Elevation (ft)
0						ASPHALT	ASPHALT CONCRETE PAVEMENT (6 inches)	
	S-1	12 28 11 11	24	18		FILL	Dense, gray-brown, fine SAND, some silt, little gravel; dry.	
	S-2	8 14 17 17	24	18			Dense, gray-brown, fine SAND, some silt, little gravel; dry.	105
5	S-3	14 14 36 50	20	14		GLACIAL TILL	Dense, yellow-brown, fine SAND, some silt, trace gravel; moist.	
						BEDROCK		100
10	C-1		60	54	30		Medium hard, slight to severely weathered, moderately to extremely fractured, medium grained, blue-gray, GNEISS, thin sub-horizontal foliation, close to very close, open to tight sub-horizontal primary joints parallel to foliation.	95
15	C-2		60	53	70		Hard, fresh to slightly weathered, moderately fractured, medium grained, blue-gray, GNEISS, very thin sub-horizontal foliation, close to very close, tight sub-horizontal primary joints parallel to foliation. Several tight to healed sub-vertical joints.	90
20	C-3		60	60	15		Hard, slightly to very slightly weathered, extremely to moderately fractured, medium grained, blue-gray, GNEISS, thin sub-horizontal foliation, close, tight, sub-horizontal primary joints parallel to foliation. Several open sub-vertical joints.	85
25							END OF BORING 25ft	
30								80

Sample Type: S = Split Spoon C = Core UP = Undisturbed Piston V = Vane Shear Test

Proportions Used: Trace = 1 - 10%, Little = 10 - 20%, Some = 20 - 35%, And = 35 - 50%

Total Penetration in Earth: 8ft Rock: 17ft	NOTES:	Sheet 1 of 1
No. of Soil Samples: 3 No. of Core Runs: 3		SM-001-M REV. 1/02

Driller:	Mike St. John	**Connecticut DOT Boring Report**		Hole No.:	B-2
Inspector:	G. Jacobsen	Town:	East Haddam, CT	Stat./Offset:	12+87/5 L
Engineer:	C. Palmer	Project No.:	40386.02	Northing:	740654.9
Start Date:	6-23-23	Route No.:	Rt 149	Easting:	1079386.8
Finish Date:	6-23-23	Bridge No.:	02698	Surface Elevation:	108.1
Project Description:	Replacement of Bridge 02698 carrying Rt. 149 over Dykas Brook				
Casing Size/Type:	3" ID	Sampler Type/Size:	2" OD	Core Barrel Type:	
Hammer Wt.:	300lb Fall: 30in.	Hammer Wt.:	140lb Fall: 30in.		
Groundwater Observations:					

Depth (ft)	Sample Type/No.	Blows on Sampler per 6 inches	Pen. (in.)	Rec. (in.)	RQD %	Generalized Strata Description	Material Description and Notes	Elevation (ft)
0						ASPHALT	ASPHALT CONCRETE PAVEMENT (6 inches)	
	S-1	18 12 8 5	24	16		FILL	Medium dense, brown-gray, fine SAND, some silt, little gravel; dry.	
	S-2	2 2 15 16	24	8			Medium dense, brown-gray, fine SAND, some silt, little gravel; dry.	105
5	S-3	35 12 10 10	24	6			Medium dense, brown-gray, fine SAND, some silt, little gravel; moist.	
	S-4	5 7 50	13	8			Medium dense, mottled brown, fine SAND, some silt, little gravel; wet.	100
10							END OF BORING 8.1ft	
								95
15								90
20								85
25								80
30								

Sample Type: S = Split Spoon C = Core UP = Undisturbed Piston V = Vane Shear Test

Proportions Used: Trace = 1 - 10%, Little = 10 - 20%, Some = 20 - 35%, And = 35 - 50%

Total Penetration in Earth: 8.1ft Rock: ft	NOTES:	Sheet 1 of 1
No. of Soil Samples: 4 No. of Core Runs: ---		SM-001-M REV. 1/02

REV.	DATE	REVISION DESCRIPTION

SIGNATURE BLOCK:

L. PEÑA M. MCCLUSKEY

DESIGNER/DRAFTER: CHECKED BY:

PRIME AE 100 GREAT MEADOW ROAD WETHERSFIELD, CT 06109

CTDOT CONNECTICUT DEPARTMENT OF TRANSPORTATION

PROJECT TITLE: REPLACEMENT OF BRIDGE NO. 02698 CARRYING ROUTE 149 (EAST HADDAM MOODUS ROAD) OVER DYKAS BROOK

TOWN(S): EAST HADDAM

DRAWING TITLE: BORING LOGS - 1

PROJECT NO.: 0040-0148

DRAWING NO.: S-04

SHEET NO.: 04-05

LASTED SAVED BY: lpena FILE NAME: c:\pw-wkrdir\primeeng-pw-01\ct - luis pena\dms07112\SB_CP_0040_0148_StrBorder.dgn

PLOTTED DATE: 4/21/2025

Connecticut DOT Boring Report

Driller:	Mike St. John	Hole No.:	B-2A
Inspector:	G. Jacobsen	Town: East Haddam, CT	Stat./Offset: 12+87/5 L
Engineer:	C. Palmer	Project No.: 40386.02	Northing: 740654
Start Date:	6-23-23	Route No.: Rt 149	Easting: 1079385.8
Finish Date:	6-23-23	Bridge No.: 02698	Surface Elevation: 108.1

Project Description: Replacement of Bridge 02698 carrying Rt. 149 over Dykas Brook

Casing Size/Type: 3" ID	Sampler Type/Size: 2" OD	Core Barrel Type: NX
Hammer Wt.: 300lb Fall: 30in.	Hammer Wt.: 140lb Fall: 30in.	

Groundwater Observations:

Depth (ft)	Sample Type/No.	Blows on Sampler per 6 inches	Pen. (in.)	Rec. (in.)	RQD %	Generalized Strata Description	Material Description and Notes	Elevation (ft)
0						ASPHALT	ASPHALT CONCRETE PAVEMENT (6 inches)	
						FILL	See B-2 log for soil descriptions.	
								105
5								
						BEDROCK		100
10	C-1		60	57	57		Medium hard to hard, very slightly weathered, moderately to extremely fractured, medium grained, blue-gray, GNEISS, very thin sub-horizontal foliation, close to very close, open to tight sub-horizontal primary joints parallel to foliation.	95
15	C-2		60	57	80		Medium hard to hard, very slightly weathered, moderately to extremely fractured, medium grained, blue-gray, GNEISS, very thin sub-horizontal foliation, close to very close, open to tight sub-horizontal primary joints parallel to foliation.	90
20	C-3		60	58	57		Medium hard to hard, very slightly weathered, slightly to moderately fractured, medium grained, blue-gray, GNEISS, very thin sub-horizontal foliation, close to moderately close, open to tight sub-horizontal primary joints parallel to foliation.	85
25	C-4		60	60	100		Hard to very hard, fresh, medium grained, blue-gray, GNEISS, very thin sub-horizontal foliation, close to moderately close, tight sub-horizontal primary joints parallel to foliation.	80
30							END OF BORING 30ft	

Sample Type: S = Split Spoon C = Core UP = Undisturbed Piston V = Vane Shear Test

Proportions Used: Trace = 1 - 10%, Little = 10 - 20%, Some = 20 - 35%, And = 35 - 50%

Total Penetration in Earth: 8ft Rock: 22ft	NOTES:	Sheet 1 of 1
No. of Soil Samples: --- No. of Core Runs: 4		SM-001-M REV. 1/02

Connecticut DOT Boring Report

Driller:	Mike St. John	Hole No.:	B-3
Inspector:	G. Jacobsen	Town: East Haddam, CT	Stat./Offset: 12+85/10 R
Engineer:	C. Palmer	Project No.: 40386.02	Northing: 740642
Start Date:	6-22-23	Route No.: Rt 149	Easting: 1079398.2
Finish Date:	6-22-23	Bridge No.: 02698	Surface Elevation: 108.2

Project Description: Replacement of Bridge 02698 carrying Rt. 149 over Dykas Brook

Casing Size/Type: 3" ID	Sampler Type/Size: 2" OD	Core Barrel Type: NX
Hammer Wt.: 300lb Fall: 30in.	Hammer Wt.: 140lb Fall: 30in.	

Groundwater Observations:

Depth (ft)	Sample Type/No.	Blows on Sampler per 6 inches	Pen. (in.)	Rec. (in.)	RQD %	Generalized Strata Description	Material Description and Notes	Elevation (ft)
0						ASPHALT	ASPHALT CONCRETE PAVEMENT (6 inches)	
						FILL		
	S-1	9 6 6 4	24	16			Medium dense, brown, GRAVEL and SAND, little silt; dry.	
								105
	S-2	5 2 1 3	24	14			Very loose, brown, GRAVEL and SAND, little silt; dry.	
5	S-3	6 50	8	6			Medium dense, brown, fine SAND, some silt, little gravel; moist.	
						BEDROCK		
	C-1		60	52	0		Medium hard to hard, slightly to very slightly weathered, moderately to extremely fractured, medium grained, blue-gray, GNEISS, very thin sub-horizontal foliation, close to very close, open to tight sub-horizontal primary joints parallel to foliation.	100
10								
	C-2		60	60	70		Moderately hard to hard, slightly weathered to fresh, moderately to slightly fractured, medium grained, blue-gray, GNEISS, very thin sub-horizontal foliation, close to moderately close, tight sub-horizontal primary joints parallel to foliation.	95
15								
	C-3		60	60	78		Hard, fresh, moderately to slightly fractured, medium grained, blue-gray, GNEISS, very thin sub-horizontal foliation, close to moderately close, tight sub-horizontal primary joints parallel to foliation.	90
20								
	C-4		60	59	90		Hard, fresh, moderately to slightly fractured, medium grained, blue-gray, GNEISS, very thin sub-horizontal foliation, close to moderately close, tight sub-horizontal primary joints parallel to foliation.	85
25								
							END OF BORING 26.5ft	80
30								

Sample Type: S = Split Spoon C = Core UP = Undisturbed Piston V = Vane Shear Test

Proportions Used: Trace = 1 - 10%, Little = 10 - 20%, Some = 20 - 35%, And = 35 - 50%

Total Penetration in Earth: 5.5ft Rock: 21.5ft	NOTES:	Sheet 1 of 1
No. of Soil Samples: 3 No. of Core Runs: 4		SM-001-M REV. 1/02

REV.	DATE	REVISION DESCRIPTION

SIGNATURE BLOCK:

L. PEÑA — DESIGNER/DRAFTER

M. MCCLUSKEY — CHECKED BY:

PRIME AE, 100 GREAT MEADOW ROAD, WETHERSFIELD, CT 06109

CTDOT — CONNECTICUT DEPARTMENT OF TRANSPORTATION

PROJECT TITLE: REPLACEMENT OF BRIDGE NO. 02698 CARRYING ROUTE 149 (EAST HADDAM MOODUS ROAD) OVER DYKAS BROOK

TOWN(S): EAST HADDAM

DRAWING TITLE: BORING LOGS - 2

PROJECT NO.: 0040-0148

DRAWING NO.: S-05

SHEET NO.: 04-06

LASTED SAVED BY: lpena FILE NAME: c:\pw-wkrdir\primeeng-pw-01\ct - luis pena\dms07112\SB_CP_0040_0148_StrBorder.dgn

PLOTTED DATE: 4/21/2025

Connecticut DOT Boring Report

Driller:	Mike St. John	Hole No.:	B-4
Inspector:	G. Jacobsen	Town: East Haddam, CT	Stat./Offset: 13+07/10 R
Engineer:	C. Palmer	Project No.: 40386.02	Northing: 740658.7
Start Date:	6-22-23	Route No.: Rt 149	Easting: 1079416.1
Finish Date:	6-22-23	Bridge No.: 02698	Surface Elevation: 108.1

Project Description: Replacement of Bridge 02698 carrying Rt. 149 over Dykas Brook

Casing Size/Type: 3" ID	Sampler Type/Size: 2" OD	Core Barrel Type: NX
Hammer Wt.: 300lb Fall: 30in.	Hammer Wt.: 140lb Fall: 30in.	

Groundwater Observations:

Depth (ft)	Sample Type/No.	Blows on Sampler per 6 inches	Pen. (in.)	Rec. (in.)	RQD %	Generalized Strata Description	Material Description and Notes	Elevation (ft)
0						ASPHALT	ASPHALT CONCRETE PAVEMENT (6 inches)	
	S-1	13 9 10 9	24	18		FILL	Medium dense, red-brown, fine SAND, some silt, little gravel; dry.	
	S-2	9 10 10 11	24	4			Medium dense, red-brown, fine SAND, some silt, little gravel; dry.	105
5	S-3	6 7 50	16	8			Medium dense, brown, fine SAND, some silt, little gravel; moist.	
						BEDROCK		
	C-1		60	60	60		Moderately hard to hard, moderately weathered to fresh, extremely to moderately fractured, medium grained, blue-gray, GNEISS, thin sub-horizontal foliation, close to very close, open to tight sub-horizontal primary joints, several minor vertical joints.	100
10								
15	C-2		60	57	57		Hard, fresh, extremely to slightly fractured, medium grained, blue-gray, GNEISS, very thin sub-horizontal foliation, very close to moderately close, open to tight sub-horizontal primary joints, several minor sub-vertical joints and fractures.	95
20	C-3		60	55	65		Hard, fresh, extremely to slightly fractured, medium grained, blue-gray, GNEISS, very thin sub-horizontal foliation, very close to moderately close, open to tight sub-horizontal primary joints, several minor sub-vertical joints and fractures.	90
25	C-4		60	59	98		Hard, fresh, moderately to slightly fractured, medium grained, blue-gray, GNEISS, very thin sub-horizontal foliation, close to moderately close, tight sub-horizontal primary joints, several minor vertical fractures.	85
30							END OF BORING 27ft	80

Sample Type: S = Split Spoon C = Core UP = Undisturbed Piston V = Vane Shear Test

Proportions Used: Trace = 1 - 10%, Little = 10 - 20%, Some = 20 - 35%, And = 35 - 50%

Total Penetration in	NOTES:	Sheet 1 of 1
Earth: 6ft Rock: 21ft		
No. of Soil Samples: 3 No. of Core Runs: 4		SM-001-M REV. 1/02

Connecticut DOT Boring Report

Driller:	Mike St. John	Hole No.:	B-5
Inspector:	G. Jacobsen	Town: East Haddam, CT	Stat./Offset: 13+08/4 L
Engineer:	C. Palmer	Project No.: 40386.02	Northing: 740670.6
Start Date:	6-26-23	Route No.: Rt 149	Easting: 1079404.8
Finish Date:	6-26-23	Bridge No.: 02698	Surface Elevation: 107.8

Project Description: Replacement of Bridge 02698 carrying Rt. 149 over Dykas Brook

Casing Size/Type: 3" ID	Sampler Type/Size: 2" OD	Core Barrel Type: NX
Hammer Wt.: 300lb Fall: 30in.	Hammer Wt.: 140lb Fall: 30in.	

Groundwater Observations:

Depth (ft)	Sample Type/No.	Blows on Sampler per 6 inches	Pen. (in.)	Rec. (in.)	RQD %	Generalized Strata Description	Material Description and Notes	Elevation (ft)
0						ASPHALT	ASPHALT CONCRETE PAVEMENT (6 inches)	
	S-1	30 23 15 10	24	14		FILL	Dense, red-brown, fine SAND, some gravel, little silt; dry.	105
	S-2	4 4 25 15	24	12			Dense, red-brown, fine SAND, some gravel, little silt; moist.	
5	S-3	43 7 7 5	24	14			Dense, red-brown, fine SAND, some gravel, little silt; moist.	
	S-4	4 3 4 60	24	14			Loose, yellow brown to dark brown, fine SILT and SAND, trace gravel; moist.	100
						BEDROCK		
10	C-1		60	59	8		Moderately hard, very slightly to moderately weathered, moderately to extremely fractured, medium grained, blue-gray, GNEISS, very thin sub-horizontal foliation, close to very close, open to tight sub-horizontal primary joints parallel to foliation.	95
15	C-2		60	57	43		Hard, very slightly weathered, moderately to extremely fractured, medium grained, blue-gray, GNEISS, very thin sub-horizontal foliation, close to very close, open to tight sub-horizontal primary joints parallel to foliation.	90
20	C-3		60	60	95		Hard, very slightly weathered, moderately to slightly fractured, medium grained, blue-gray, GNEISS, very thin sub-horizontal foliation, close to moderately close, tight sub-horizontal primary joints parallel to foliation.	85
25	C-4		60	60	90		Hard, very slightly weathered, moderately to slightly fractured, medium grained, blue-gray, GNEISS, very thin sub-horizontal foliation, close to moderately close, tight sub-horizontal primary joints parallel to foliation.	80
30							END OF BORING 30ft	

Sample Type: S = Split Spoon C = Core UP = Undisturbed Piston V = Vane Shear Test

Proportions Used: Trace = 1 - 10%, Little = 10 - 20%, Some = 20 - 35%, And = 35 - 50%

Total Penetration in	NOTES:	Sheet 1 of 1
Earth: 8.7ft Rock: 21.3ft		
No. of Soil Samples: 4 No. of Core Runs: 4		SM-001-M REV. 1/02

REVISION DESCRIPTION | DATE | REV.

SIGNATURE BLOCK:

L. PEÑA — DESIGNER/DRAFTER:

M. MCCLUSKEY — CHECKED BY:

PRIME AE, 100 GREAT MEADOW ROAD, WETHERSFIELD, CT 06109

CTDOT — CONNECTICUT DEPARTMENT OF TRANSPORTATION

PROJECT TITLE: REPLACEMENT OF BRIDGE NO. 02698 CARRYING ROUTE 149 (EAST HADDAM MOODUS ROAD) OVER DYKAS BROOK

TOWN(S): EAST HADDAM

DRAWING TITLE: BORING LOGS - 3

PROJECT NO.: 0040-0148

DRAWING NO.: S-06

SHEET NO.: 04-07

LASTED SAVED BY: lpena FILE NAME: c:\pw-wkrdir\primeeng-pw-01\ct - luis pena\dms07112\SB_CP_0040_0148_StrBorder.dgn

PLOTTED DATE: 4/21/2025

Connecticut DOT Boring Report

Driller: Mike St. John		Hole No.: B-6(OW)	
Inspector: G. Jacobsen	Town: East Haddam, CT	Stat./Offset: 13+55/10 L	
Engineer: C. Palmer	Project No.: 40386.02	Northing: 740705.6	
Start Date: 6-27-23	Route No.: Rt 149	Easting: 1079435	
Finish Date: 6-27-23	Bridge No.: 02698	Surface Elevation: 107.6	
Project Description: Replacement of Bridge 02698 carrying Rt. 149 over Dykas Brook			
Casing Size/Type: 3" ID	Sampler Type/Size: 2" OD	Core Barrel Type: NX	
Hammer Wt.: 300lb Fall: 30in.	Hammer Wt.: 140lb Fall: 30in.		
Groundwater Observations:			

Depth (ft)	Sample Type/No.	Blows on Sampler per 6 inches	Pen. (in.)	Rec. (in.)	RQD %	Generalized Strata Description	Material Description and Notes	Elevation (ft)
0						ASPHALT	ASPHALT CONCRETE PAVEMENT (6 inches)	
	S-1	5 10 7 8	24	14		FILL	Medium dense, gray, fine to medium SAND and SILT, little gravel; dry.	105
	S-2	9 12 10 22	24	14			Medium dense, yellow brown, fine SAND, some silt, little gravel; dry.	
5	S-3	16 22 28 31	24	14		GLACIAL TILL	Very dense, brown, fine to medium SAND, little gravel, little silt; moist.	
	S-4	35 26 34 50	20	18			Very dense, brown, fine to medium SAND, little gravel, little silt; moist.	100
10	S-5	19 35 70	14	12			Very dense, brown, fine to medium SAND and SILT, little gravel; moist.	
						BEDROCK		95
	C-1		36	10	0		Very soft, completely weathered, extremely fractured, medium grained, blue-gray, GNEISS.	
15	C-2		60	46	37		Moderately hard, moderately weathered, moderately to extremely fractured, medium grained, blue-gray, GNEISS, thin sub-horizontal foliation, close to very close, open sub-horizontal primary joints.	90
20	C-3		60	59	46		Hard, fresh, moderately to extremely fractured, medium grained, blue-gray, GNEISS, very thin sub-horizontal foliation, close to very close, tight to open sub-horizontal primary joints parallel to foliation.	85
25	C-4		60	60	93		Hard, fresh, moderately fractured, medium grained, blue-gray, GNEISS, very thin sub-horizontal foliation, close to very close, tight to open sub-horizontal primary joints parallel to foliation. Several sub-vertical secondary cracks.	80
30							END OF BORING 30ft	

Sample Type: S = Split Spoon C = Core UP = Undisturbed Piston V = Vane Shear Test

Proportions Used: Trace = 1 - 10%, Little = 10 - 20%, Some = 20 - 35%, And = 35 - 50%

Total Penetration in Earth: 11ft Rock: 19ft	NOTES:	Sheet 1 of 1
No. of Soil Samples: 5 No. of Core Runs: 4		SM-001-M REV. 1/02

REVISION DESCRIPTION | DATE | REV.

SIGNATURE BLOCK:

L. PEÑA — DESIGNER/DRAFTER:

M. MCCLUSKEY — CHECKED BY:

PRIME AE, 100 GREAT MEADOW ROAD, WETHERSFIELD, CT 06109

CTDOT — CONNECTICUT DEPARTMENT OF TRANSPORTATION

PROJECT TITLE: REPLACEMENT OF BRIDGE NO. 02698 CARRYING ROUTE 149 (EAST HADDAM MOODUS ROAD) OVER DYKAS BROOK

TOWN(S): EAST HADDAM

DRAWING TITLE: BORING LOGS - 4

PROJECT NO.: 0040-0148

DRAWING NO.: S-07

SHEET NO.: 04-08

LASTED SAVED BY: lpena FILE NAME: c:\pw-wkrdir\primeeng-pw-01\c1-luis pena\dms07112\SB_CP_0040_0148_StrBorder.dgn

PLOTTED DATE: 4/21/2025

GENERAL NOTES

1. SPECIFICATIONS: CONNECTICUT DEPARTMENT OF TRANSPORTATION FORM 819 (2024), SUPPLEMENTAL SPECIFICATIONS DATED JANUARY 2025, AND SPECIAL PROVISIONS.

2. DESIGN SPECIFICATIONS: AASHTO LRFD BRIDGE DESIGN SPECIFICATIONS, 9TH EDITION (2020), WITH THE INTERIM SPECIFICATIONS UP TO AND INCLUDING 2023, AS SUPPLEMENTED BY THE CONNECTICUT DEPARTMENT OF TRANSPORTATION BRIDGE AND ROADWAY STRUCTURES DESIGN MANUAL (RELEASE 1, REVISED JANUARY 2025).

3. MATERIAL STRENGTHS:

   CONCRETE:
   CLASS PCC03340 . . . . . f'c = 3,000 PSI
   CLASS PCC04460 . . . . . f'c = 4,000 PSI
   CLASS PCC04462 . . . . . f'c = 4,000 PSI
   CLASS PRC06062 . . . . . f'c = 6,500 PSI

   THE CONCRETE STRENGTH, f'c, USED IN THE DESIGN OF THE CONCRETE COMPONENTS IS NOTED ABOVE. THE COMPRESSIVE STRENGTH OF THE CONCRETE IN THE CONSTRUCTED COMPONENTS SHALL CONFORM TO THE REQUIREMENTS OF 6.01 - CONCRETE FOR STRUCTURES AND M.03 - PORTLAND CEMENT CONCRETE, 5.14, AND M.14 - PREFABRICATED CONCRETE MEMBERS.

   REINFORCEMENT:
   (ASTM A615 GRADE 60) . . . . . fy = 60,000 PSI

4. PRESTRESSED CONCRETE: REFER TO PRESTRESSED CONCRETE NOTES ON DRAWING NO. S-12.

5. DESIGN VEHICLE LIVE LOAD: HL-93

6. FUTURE PAVING ALLOWANCE: NONE

7. BITUMINOUS CONCRETE OVERLAY: THIS SHALL CONSIST OF TWO LAYERS, 2" HMA S0.50 TRAFFIC LEVEL 2 ON 1" HMA S0.25 TRAFFIC LEVEL 2.

8. UTILITIES: THE FOLLOWING UTILITY IS LOCATED WITHIN THE PROJECT LIMITS AND SHALL BE PROTECTED DURING CONSTRUCTION: EVERSOURCE ENERGY.

   THE CONTRACTOR SHALL COORDINATE ALL WORK RELATED TO UTILITY RELOCATION WITH THE RESPECTIVE UTILITY COMPANIES.

9. MASH TEST LEVEL: THE 42-INCH-HIGH SINGLE SLOPE PARAPET MEETS THE TL-3 CRITERIA FOR MASH 2016.

10. FOUNDATION PRESSURES: THE VARIOUS GROUP LOADINGS NOTED ON THE SUBSTRUCTURE PLAN SHEETS REFER TO THE GROUP LOADS AS GIVEN IN THE AASHTO LRFD BRIDGE DESIGN SPECIFICATIONS.

11. DIMENSIONS: WHEN DECIMAL DIMENSIONS ARE GIVEN TO LESS THAN THREE DECIMAL PLACES, THE OMITTED DIGITS SHALL BE ASSUMED TO BE ZEROS. ALL ELEVATIONS ARE GIVEN IN FEET.

12. EXISTING DIMENSIONS: DIMENSIONS OF THE EXISTING STRUCTURE SHOWN ON THESE PLANS ARE FOR GENERAL REFERENCE ONLY. THEY HAVE BEEN TAKEN FROM THE SURVEY AND ARE NOT GUARANTEED. THE CONTRACTOR SHALL TAKE ALL FIELD MEASUREMENTS NECESSARY TO ASSURE PROPER FIT OF THE FINISHED WORK AND SHALL ASSUME FULL RESPONSIBILITY FOR THEIR ACCURACY. WHEN SHOP DRAWINGS BASED ON FIELD MEASUREMENTS ARE SUBMITTED FOR REVIEW, THE FIELD MEASUREMENTS SHALL ALSO BE SUBMITTED FOR REFERENCE BY THE REVIEWER.

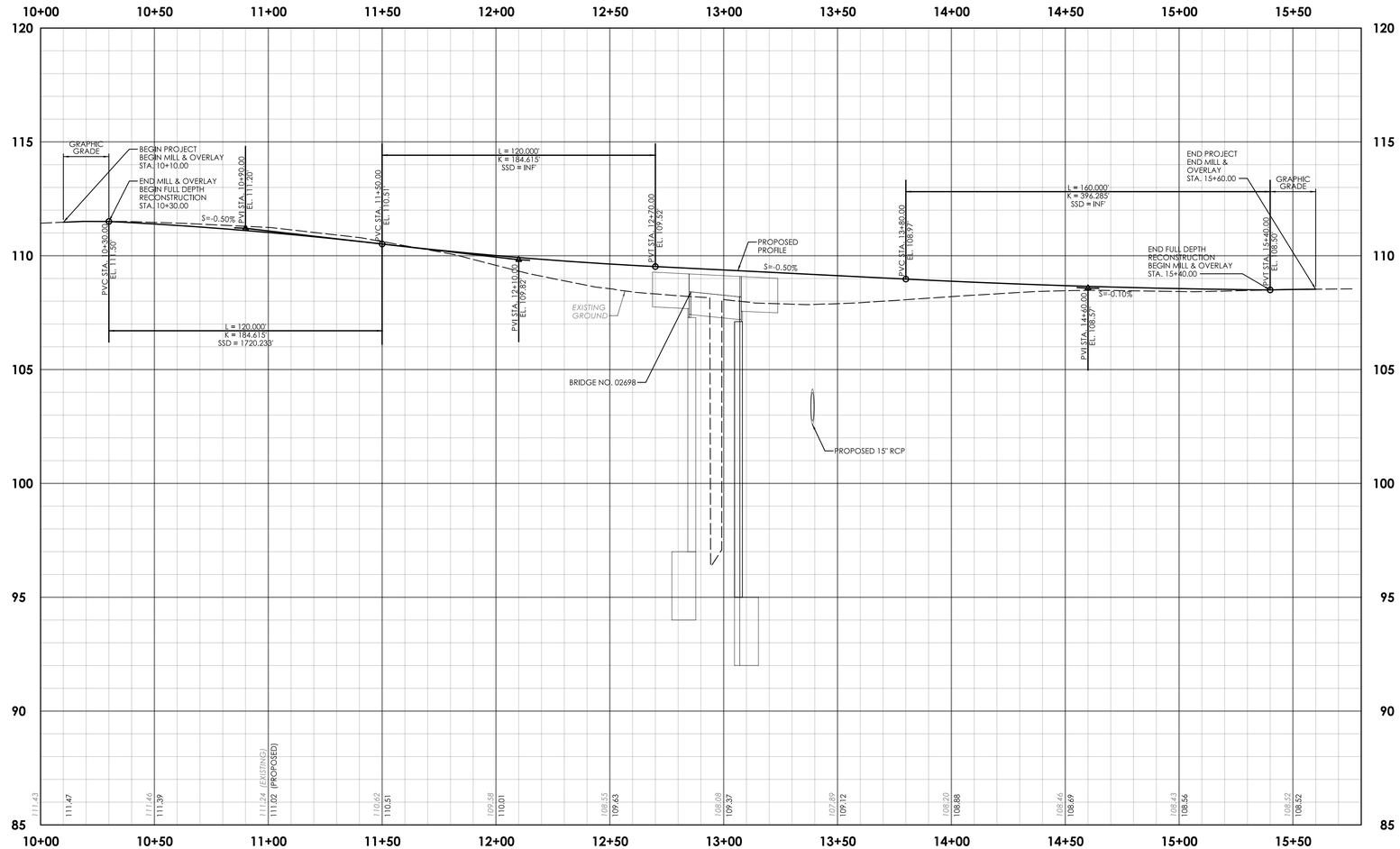

PROFILE

HORIZONTAL SCALE: 1"=30'
VERTICAL SCALE: 1"=3'

CONCRETE NOTES

1. STAY-IN-PLACE FORMS: THE USE OF STAY-IN-PLACE FORMS FORMS ON THIS STRUCTURE IS NOT ALLOWED.

2. COMPOSITE CONSTRUCTION: NO TEMPORARY INTERMEDIATE SUPPORTS SHALL BE USED PRIOR TO OR DURING THE PLACEMENT AND SETTING OF THE CONCRETE DECK SLAB. CONSTRUCTION LOADS AND DEAD LOADS WILL BE PERMITTED ONLY WHEN DIRECTED BY THE ENGINEER, AND ONLY WHEN THE CONTRACTOR'S TEST RESULTS SHOW THAT THE SLAB CONCRETE HAS REACHED A STRENGTH OF f'c = 3,500 PSI. LIVE LOADS (TRAFFIC) WILL BE PERMITTED ON THE STRUCTURE AFTER THE CONTRACTOR'S TEST RESULTS SHOW THAT THE CONCRETE HAS REACHED A STRENGTH OF f'c = 4,000 PSI.

3. THE FOLLOWING PAY ITEMS AND CONCRETE CLASSES ARE REQUIRED FOR CAST-IN-PLACE BRIDGE COMPONENTS:

ITEM	BRIDGE COMPONENTS	PCC CLASS
BRIDGE DECK CONCRETE	BRIDGE DECK	PCC04462
ABUTMENT AND WALL CONCRETE	ABUTMENT AND WINGWALLS, CHEEKWALLS, SUBFOUNDATION	PCC03340
APPROACH SLAB CONCRETE	APPROACH SLABS	PCC04462
BARRIER WALL CONCRETE	BARRIER WALLS	PCC04462
PARAPET CONCRETE	PARAPETS	PCC04462

4. EXPOSED EDGES: EXPOSED EDGES OF CONCRETE SHALL BE BEVELED 3/4" x 3/4" UNLESS DIMENSIONED OTHERWISE.

5. CONCRETE COVER: ALL REINFORCEMENT SHALL HAVE TWO INCHES COVER UNLESS DIMENSIONED OTHERWISE.

6. REINFORCEMENT: ALL REINFORCEMENT SHALL BE GALVANIZED AFTER FABRICATION UNLESS NOTED OTHERWISE. ALL REINFORCEMENT SHALL CONFORM TO THE REQUIREMENTS OF ASTM A767, CLASS 1, INCLUDING SUPPLEMENTAL REQUIREMENTS. THE COST OF FURNISHING AND PLACING THIS REINFORCEMENT SHALL BE INCLUDED IN THE ITEM "DEFORMED STEEL BARS - GALVANIZED."

7. PREFORMED EXPANSION JOINT FILLER: THE COST OF FURNISHING AND INSTALLING PREFORMED EXPANSION JOINT FILLER IS PAID FOR AS "1" PREFORMED EXPANSION JOINT FILLER FOR BRIDGES" OR "1/2" PREFORMED EXPANSION JOINT FILLER FOR BRIDGES."

8. CONSTRUCTION JOINTS: CONSTRUCTION JOINTS, OTHER THAN THOSE SHOWN ON THE PLANS, WILL NOT BE PERMITTED WITHOUT THE PRIOR APPROVAL OF THE ENGINEER.

TRANSPORTATION DIMENSIONS AND WEIGHTS				
MEMBER	SHIPPING LENGTH	SHIPPING HEIGHT	SHIPPING WIDTH	SHIPPING WEIGHT
B1, B2, B6, B10, AND B11	21.33 ft	1 ft	3 ft	9,600 lbs
B3 THRU B5 AND B7 THRU B9	21.33 ft	1 ft	4 ft	12,800 lbs

NOTICE TO BRIDGE INSPECTORS	
The Department's Bridge Safety procedures require this bridge to be inspected for, but not limited to, all appropriate components indicated in the governing manuals for bridge inspection. Attention must be given to inspecting the following special components and details. (The listing for components for specific attention shall not be construed to reduce the importance of inspection of any other component of the structure.) The frequency of inspection of this structure shall be in accordance with the governing manuals for bridge inspection, unless otherwise directed by the Manager of Bridge Safety and Evaluation.	
Component or Detail	Structure Sheet Reference
None	

REV.	DATE	REVISION DESCRIPTION

SIGNATURE BLOCK:
L. PEÑA — DESIGNER/DRAFTER:
M. MCCLUSKEY — CHECKED BY:

PRIME AE, 100 GREAT MEADOW ROAD, WETHERSFIELD, CT 06109

CTDOT — CONNECTICUT DEPARTMENT OF TRANSPORTATION

PROJECT TITLE: REPLACEMENT OF BRIDGE NO. 02698 CARRYING ROUTE 149 (EAST HADDAM MOODUS ROAD) OVER DYKAS BROOK

TOWN(S): EAST HADDAM

DRAWING TITLE: NOTES AND VERTICAL PROFILE

PROJECT NO.: 0040-0148

DRAWING NO.: S-08

SHEET NO.: 04-09

LASTED SAVED BY: lpena FILE NAME: c:\pw-wkrdir\primeeng-pw-01\ct - luis pena\dms07112\SB_CP_0040_0148_StrBorder.dgn
PLOTTED DATE: 4/21/2025

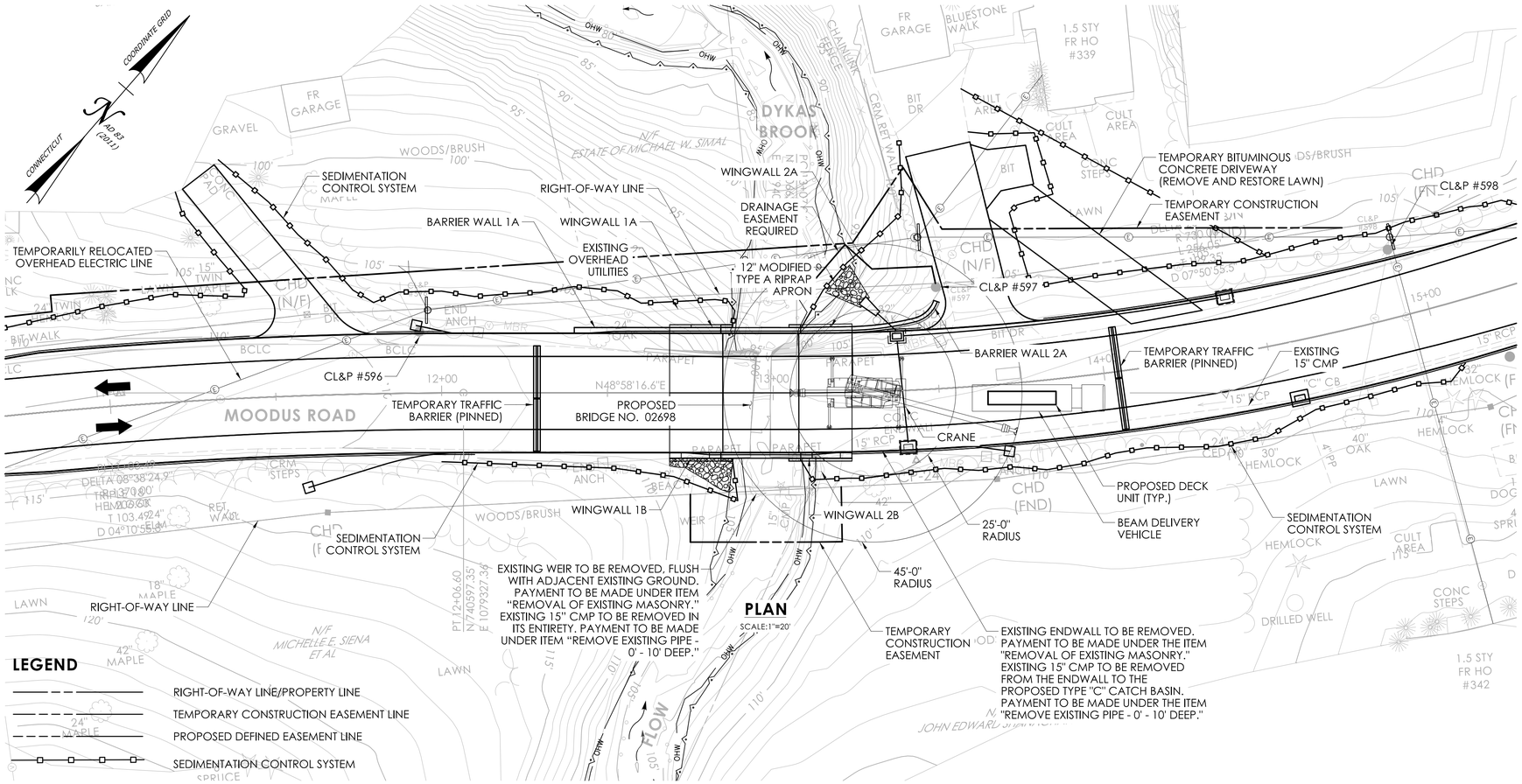

PLAN
SCALE:1"=20'

LEGEND

- RIGHT-OF-WAY LINE/PROPERTY LINE
- TEMPORARY CONSTRUCTION EASEMENT LINE
- PROPOSED DEFINED EASEMENT LINE
- SEDIMENTATION CONTROL SYSTEM

CONSTRUCTION NOTES

1. THE SUPERSTRUCTURE REMOVAL AND ERECTION PLANS SHOWN REPRESENT ONE SUGGESTED METHOD FOR REMOVAL OF THE EXISTING SUPERSTRUCTURE AND ERECTING THE PRESTRESSED DECK UNITS. THE INFORMATION GIVEN ON THESE DRAWINGS IS APPLICABLE TO THIS METHOD, BUT MAY NOT BE APPLICABLE TO OTHER METHODS OF ERECTION.
2. THE CONTRACTOR SHALL DEVELOP THEIR OWN METHOD OF REMOVAL AND ERECTION. THE CONTRACTOR SHALL PREPARE AND SUBMIT WORKING DRAWINGS AND CALCULATIONS TO THE ENGINEER FOR REVIEW.
3. THE CONTRACTOR'S REMOVAL AND ERECTION PROCEDURES MUST BE COMPATIBLE WITH THE MAINTENANCE AND PROTECTION OF TRAFFIC PROVISIONS IN THE CONTRACT DOCUMENTS.
4. THROUGHOUT ALL STAGES OF THE WORK, THE CONTRACTOR SHALL TAKE THE PROPER PRECAUTIONS TO ENSURE THE STABILITY OF ALL STRUCTURAL ELEMENTS UNTIL THE TOTAL STRUCTURE IS IN BEING.
5. CONTRACTOR TO VERIFY WEIGHT OF ALL CRANE PICKS.
6. A DEBRIS SHIELD IS REQUIRED FOR ALL DEMOLITION AND ERECTION OVER DYKAS BROOK. SUBMIT A STAMPED DESIGN OF THE DEBRIS SHIELD FOR REVIEW BY THE ENGINEER PRIOR TO THE COMMENCEMENT OF WORK. THE COST TO INSTALL, MAINTAIN, AND REMOVE THE DEBRIS SHIELD SHALL BE PAID UNDER "REMOVAL OF EXISTING BRIDGE."
7. CONTRACTOR TO NOTE THAT WATER ACCESS IS NEITHER PROPOSED NOR REQUIRED. ALL WORK IS TO BE SHIELDED OVER THE WATER.
8. DRIVEWAY ACCESS SHALL BE MAINTAINED THROUGH PROJECT DURATION AS SHOWN ON THE PLANS.
9. ESTIMATED MAXIMUM PICK WEIGHT; DOES NOT INCLUDE RIGGING: 13.0 KIPS (DECK UNITS B3 THRU B5 and B7 THRU B9)

SUGGESTED SEQUENCE OF CONSTRUCTION

1. PERFORM CLEARING AND GRUBBING.
2. RELOCATE UTILITY POLES AND OVERHEAD UTILITY LINES (BY OTHERS).
3. DETOUR TRAFFIC AND SET UP TRAFFIC CONTROL ITEMS. INSTALL TEMPORARY BITUMINOUS CONCRETE DRIVEWAY.
4. INSTALL SEDIMENT CONTROL SYSTEM.
5. INSTALL DEBRIS SHIELD. MINIMUM ELEVATION 104.5'.
6. REMOVE EXISTING SUPERSTRUCTURE.
7. REMOVE DEBRIS SHIELD. THE COST SHALL BE PAID UNDER "REMOVAL OF EXISTING BRIDGE."

STAGE 1

8. INSTALL WATER-HANDLING COFFERDAM AND DEWATERING BASINS. THE COST SHALL BE PAID UNDER "HANDLING WATER."
9. REMOVE ABUTMENT 2 AND WINGWALLS, NORTHERN WEIR SECTION AND 15" CMP, AND EXISTING CONCRETE ENDWALL AND 15" CMP.
10. CONSTRUCT PROPOSED CAST-IN-PLACE ABUTMENT 2 AND WINGWALLS AS SHOWN.
11. PERFORM GRADING AROUND ABUTMENT 2 AND THE WING WALLS AS REQUIRED.

STAGE 2

12. RESET WATER-HANDLING COFFERDAM TO STAGE 2 CONFIGURATION.
13. REMOVE ABUTMENT 1 AND WINGWALLS, AND SOUTHERN WEIR SECTION.
14. CONSTRUCT PROPOSED CAST-IN-PLACE ABUTMENT 1 AND WINGWALLS AS SHOWN.
15. PERFORM GRADING AROUND ABUTMENT 1 AND THE WING WALLS AS REQUIRED.
16. REMOVE WATER-HANDLING COFFERDAM AND DEWATERING BASINS.

STAGE 3

17. INSTALL BEARINGS AND ERECT PRECAST CONCRETE DECK UNITS. CAST CHEEKWALLS.
18. GROUT THE SHEAR KEYS OF THE PRECAST CONCRETE DECK UNITS.
19. CONSTRUCT CONCRETE TOPPING SLAB.
20. CONSTRUCT PARAPETS.
21. CONSTRUCT REMAINING BARRIER WALL SECTIONS.
22. INSTALL PROPOSED CATCH BASINS, 15" CROSS PIPE, 15" OUTLET PIPE, R.C.C.E., AND RIPRAP APRON TO OUTLET DOWNSTREAM.
23. CONSTRUCT APPROACH SLABS.
24. INSTALL MEMBRANE WATERPROOFING OVER THE DECK AND APPROACH SLABS AND APPLY PENETRATING SEALER PROTECTIVE COMPOUND FOR THE CONCRETE PARAPETS.
25. MILL EXISTING ROADWAY AND RECONSTRUCT FULL DEPTH ROADWAY.
26. INSTALL GUIDE RAIL AND END ANCHORAGES.
27. REMOVE TEMPORARY DRIVEWAY.
28. PERFORM FINAL GRADING AND INSTALL PERMIT PLANTINGS AND SEEDING.
29. REMOVE TRAFFIC ITEMS AND DETOUR.
30. REMOVE EROSION AND SEDIMENTATION CONTROLS UPON PERMANENT STABILIZATION.

REV.	DATE	REVISION DESCRIPTION

SIGNATURE BLOCK:

DESIGNER/DRAFTER:	CHECKED BY:
L. PEÑA	M. MCCLUSKEY

PRIME AE, 100 GREAT MEADOW ROAD, WETHERSFIELD, CT 06109

CTDOT — CONNECTICUT DEPARTMENT OF TRANSPORTATION

PROJECT TITLE: REPLACEMENT OF BRIDGE NO. 02698 CARRYING ROUTE 149 (EAST HADDAM MOODUS ROAD) OVER DYKAS BROOK

TOWN(S): EAST HADDAM

DRAWING TITLE: CONSTRUCTION PLAN-1

PROJECT NO.: 0040-0148

DRAWING NO.: S-09

SHEET NO.: 04-10

LASTED SAVED BY: lpena **FILE NAME:** c:\pw-wkrdir\primeeng-pw-01\ct - luis pena\dms07112\S8_CP_0040_0148_StrBorder.dgn
PLOTTED DATE: 4/21/2025

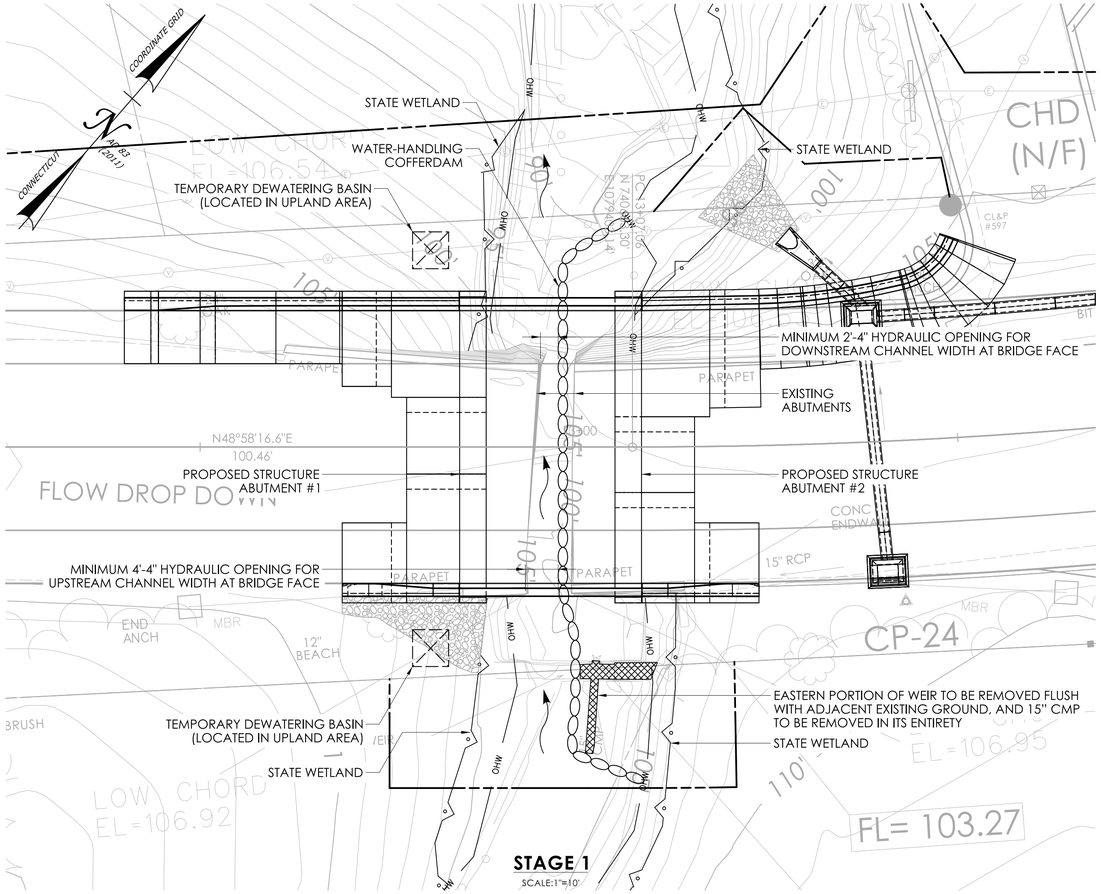

STAGE 1
SCALE:1"=10'

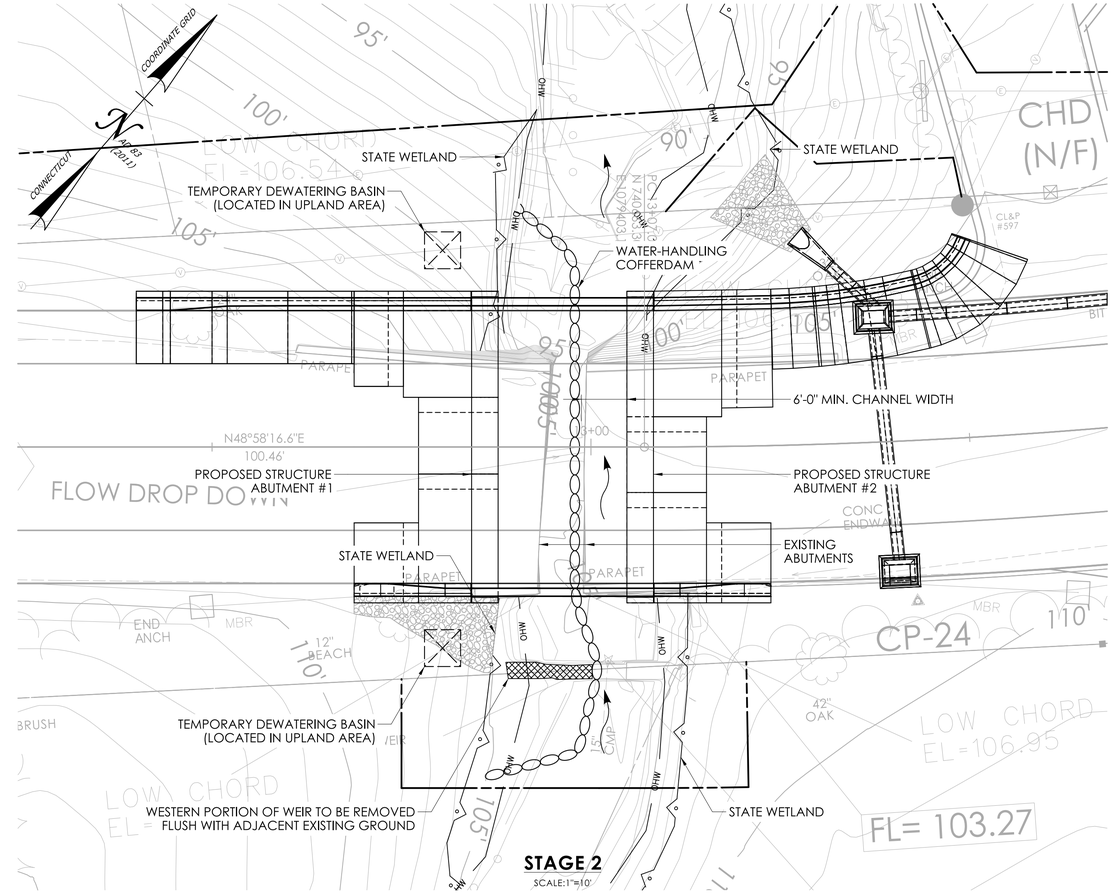

STAGE 2
SCALE:1"=10'

PROPOSED WATER HANDLING SCHEMATIC FOR PROJECT

(SEE WATER-HANDLING NOTE 4)

WATER HANDLING NOTES

1. THE CONTRACTOR SHALL MAINTAIN WATER THROUGH THE TEMPORARY WATER HANDLING SYSTEM AS REQUIRED DURING CONSTRUCTION OF THE NEW STRUCTURE.
2. A DEWATERING BASIN SHALL BE ESTABLISHED OUTSIDE OF THE WETLAND LIMITS.
3. TEMPORARY WATER-HANDLING-COFFERDAM SHALL CONSIST OF AN APPROVED SYSTEM THAT THE CONTRACTOR ELECTS TO USE WHICH WILL SAFELY CONVEY WATER FLOWS THROUGH THE CONSTRUCTION AREA, SHALL BE ABLE TO SUPPORT CONSTRUCTION ACTIVITY AND SHALL CONFORM TO PERMITS.

   ANY WATER-HANDLING SCHEME DEPICTED IN THE DEPARTMENT'S 'HANDLING WATER TYPICAL SCHEMATICS' GUIDANCE DOCUMENT, DATED MAY 14, 2019, AND REVISED FEBRUARY 2, 2023, MAY BE UTILIZED UNLESS SPECIFICALLY PROHIBITED. THE CONTRACTOR SHALL SUBMIT A MEANS AND METHOD FOR THE WATER-HANDLING SYSTEM TO THE ENGINEER FOR APPROVAL.
4. WATER HANDLING MEASURES SHALL NOT EXCEED IMPACT AREAS SHOWN ON THE WETLAND IMPACT SHEET OF THE PERMIT PLANS.
5. ANY STORM DRAINAGE DISCHARGING INTO A CONFINED WORK AREA FROM EXISTING OR PROPOSED STORM DRAINAGE PIPES SHALL BE DIVERTED OR PUMPED OUTSIDE THE CONFINED AREAS. PUMPS/PIPES SHALL BE SIZED BY THE CONTRACTOR TO HANDLE THE EXPECTED FLOWS AND BE DISCHARGED TO A STABLE LOCATION. THE CONTRACTORSHALL SUBMIT THE MEANS AND METHODS OF HANDLING STORM DRAINAGE TO THE ENGINEER FOR APPROVAL AND IS INCLUDED AS PART OF WATER HANDLING.

UNCONFINED IN-STREAM WORK BMP NOTES

ANY UNCONFINED IN-STREAM WORK WITHIN THE WATERCOURSE SHALL BE RESTRICTED TO THE PERIOD FROM JUNE 1 TO SEPTEMBER 30, INCLUSIVE.

THE DEPARTMENT WILL REVIEW AND MAY APPROVE THE METHODS OF UNCONFINED IN-WATER WORK WITH CONSIDERATION OF THE FOLLOWING:

- PROPOSED SCHEDULE FOR WORK OPERATIONS
- ALL UNCONFINED IN-WATER WORK SHALL BE MINOR IN NATURE
- DISTURBANCE SHALL BE LIMITED TO AREAS THAT HAVE BEEN APPROVED FOR TEMPORARY AND PERMANENT IMPACT
- BEST MANAGEMENT PRACTICES SHALL BE UTILIZED WHEREVER POSSIBLE TO MINIMIZE TURBIDITY AND SEDIMENT TRANSPORT DOWNSTREAM
- DISTURBED AREAS AND THE DURATION OF DISTURBANCE SHALL BE MINIMIZED TO THE EXTENT POSSIBLE
- IN-STREAM WORK SHALL BE PERFORMED DURING PERIODS OF LOW FLOW

PROTECTED SPECIES TIME-OF-YEAR NOTE

TRI-COLORED BAT: NO TRIMMING, CUTTING, OR REMOVAL OF TREES WITH A 3" DBH OR GREATER FROM APRIL 15 TO OCTOBER 31.

TEMPORARY HYDRAULIC DATA*		
AVERAGE DAILY FLOW (CFS)	1.2	
AVERAGE SPRING FLOW (CFS)	2.4	
TEMPORARY DESIGN FREQUENCY	2-YEAR STORM	
2-YEAR FREQUENCY DISCHARGE (CFS)	45	
	STAGE 1	STAGE 2
2-YEAR WATER SURFACE ELEVATION UPSTREAM WEIR (FT)	104.67	102.75
2-YEAR WATER SURFACE ELEVATION UPSTREAM BRIDGE (FT)	103.25	101.93
2-YEAR WATER SURFACE ELEVATION DOWNSTREAM (FT	90.91	90.81

*NOTE: VALUES AND ELEVATIONS MAY VARY SLIGHTLY FROM THE CONTRACT PLANS.

NOTE:
DUE TO THE STEEP SLOPE THROUGH THE STRUCTURE, THE WATER-HANDLING COFFERDAM HEIGHT IS REPORTED BASED ON THE MINIMUM HEIGHT REQUIRED TO CONVEY THE 2-YEAR DESIGN STORM.

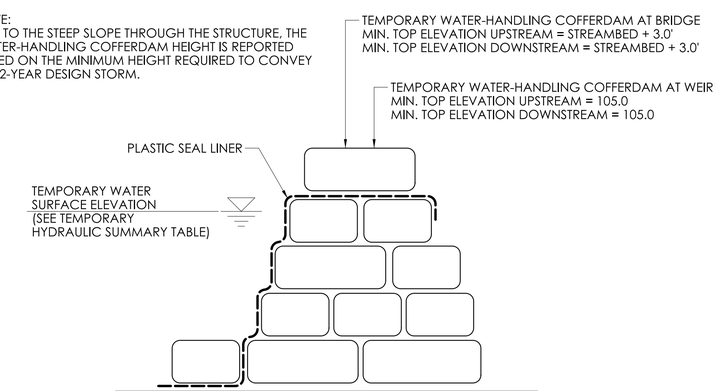

WATER-HANDLING COFFERDAM SANDBAGS
SCALE: NOT TO SCALE

REV.	DATE	REVISION DESCRIPTION

SIGNATURE BLOCK:
L. PEÑA — DESIGNER/DRAFTER:
M. MCCLUSKEY — CHECKED BY:

PRIME AE, 100 GREAT MEADOW ROAD, WETHERSFIELD, CT 06109

CTDOT — CONNECTICUT DEPARTMENT OF TRANSPORTATION

PROJECT TITLE: REPLACEMENT OF BRIDGE NO. 02698 CARRYING ROUTE 149 (EAST HADDAM MOODUS ROAD) OVER DYKAS BROOK

TOWN(S): EAST HADDAM

DRAWING TITLE: CONSTRUCTION PLAN-2

PROJECT NO.: 0040-0148

DRAWING NO.: S-10

SHEET NO.: 04-11

LASTED SAVED BY: lpena FILE NAME: c:\pw-wkrdir\primeeng-pw-01\ct - luis pena\dms07112\SB_CP_0040_0148_StrBorder.dgn
PLOTTED DATE: 4/21/2025

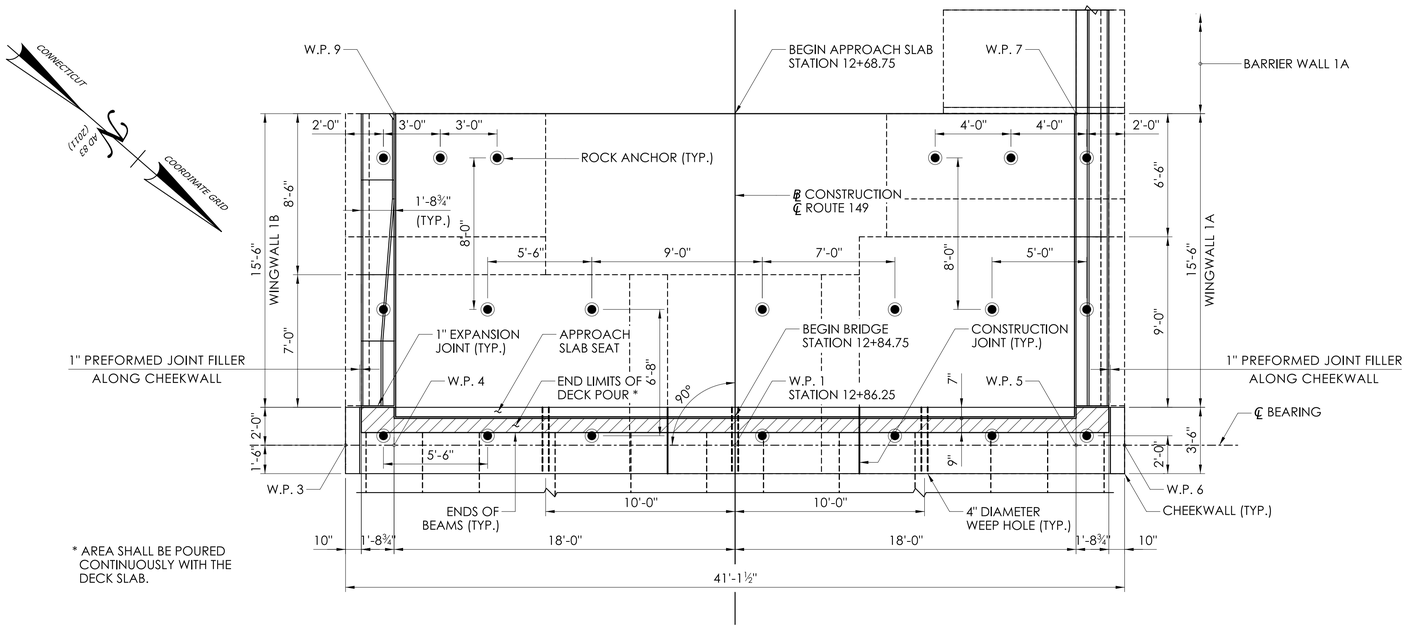

* AREA SHALL BE POURED CONTINUOUSLY WITH THE DECK SLAB.

ABUTMENT 1 PLAN

SCALE: 1/4"=1'-0"

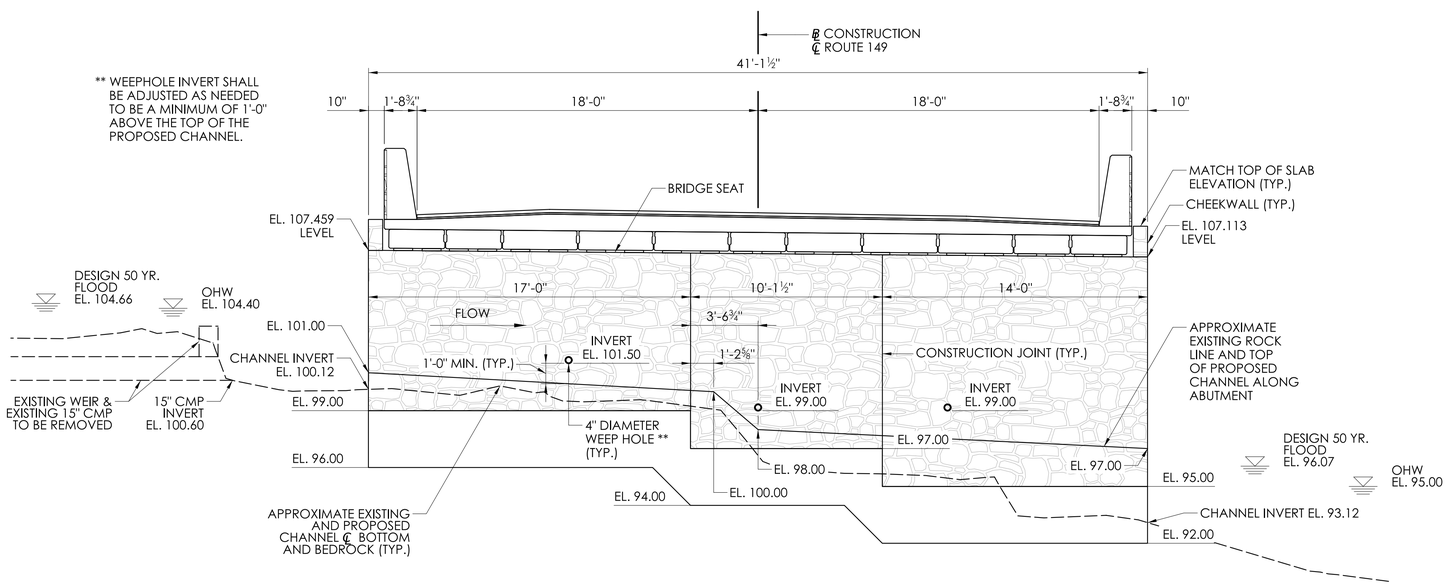

** WEEPHOLE INVERT SHALL BE ADJUSTED AS NEEDED TO BE A MINIMUM OF 1'-0" ABOVE THE TOP OF THE PROPOSED CHANNEL.

ABUTMENT 1 ELEVATION

SCALE: 1/4"=1'-0"

MAXIMUM DESIGN BEARING PRESSURES

STRENGTH I LIMIT STATE: 11.98 KSF
SERVICE I LIMIT STATE: 8.39 KSF

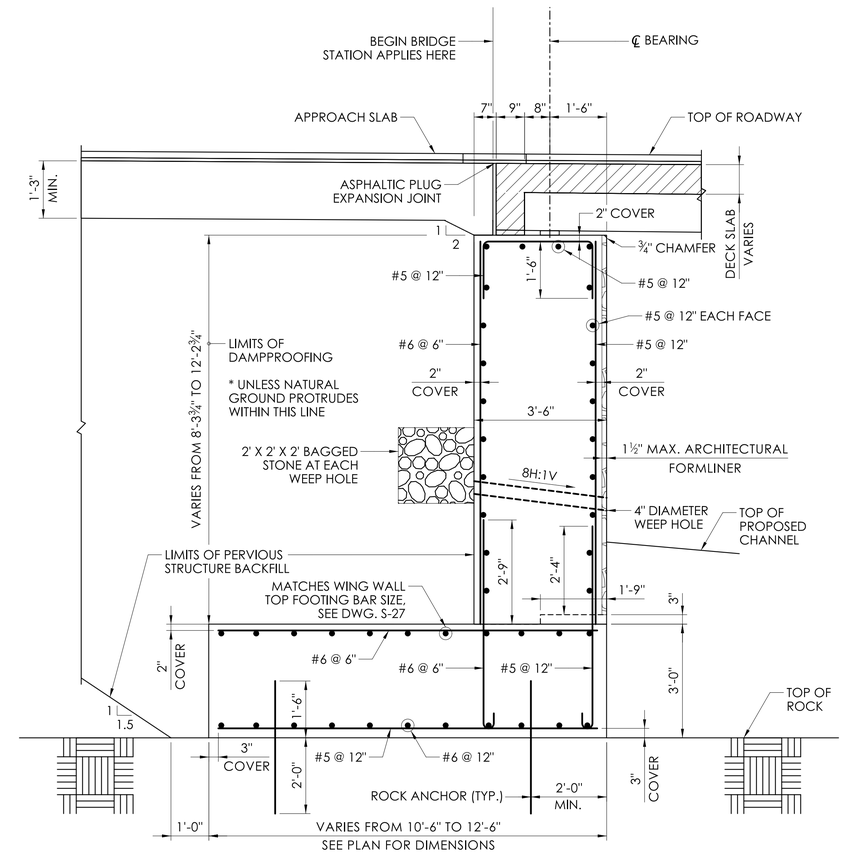

TYPICAL SECTION

SCALE: 1/2"=1'-0"

NOTES:

1. FOR ASPHALTIC PLUG EXPANSION JOINT DETAILS, SEE DWG. S-23.
2. FOR ROCK ANCHORAGE DETAILS, SEE DWG. S-13.
3. FOR ABUTMENT DETAILS, SEE DWG. S-13.
4. FOR APPROACH SLAB DETAILS, SEE DWG. S-22.
5. BEDROCK SHALL BE EXCAVATED TO THE ELEVATIONS SHOWN FOR THE CONSTRUCTION OF FOOTINGS. IF NO BEDROCK IS FOUND AT THE PROPOSED BOTTOM OF FOOTING ELEVATIONS, THE CONTRACTOR SHALL EXCAVATE UNTIL BEDROCK IS REACHED. THIS ADDITIONAL EXCAVATION SHALL BE FILLED WITH CONCRETE TO CONSTRUCT THE FOOTINGS, MAINTAINING THE TOP OF FOOTING ELEVATIONS. SEE DETAIL ON DWG. S-13.
6. ANY ADDITIONAL EXCAVATION REQUIRED WILL BE PAID FOR UNDER ITEM "STRUCTURE EXCAVATION – ROCK (COMPLETE)."
7. PAYMENT FOR ROCK ANCHORS WILL BE COVERED UNDER ITEM "DRILLING HOLES AND BONDING ANCHORS."

REV.	DATE	REVISION DESCRIPTION

SIGNATURE BLOCK:
L. PEÑA — DESIGNER/DRAFTER
M. MCCLUSKEY — CHECKED BY:

PRIME AE, 100 GREAT MEADOW ROAD, WETHERSFIELD, CT 06109

CTDOT — CONNECTICUT DEPARTMENT OF TRANSPORTATION

PROJECT TITLE: REPLACEMENT OF BRIDGE NO. 02698 CARRYING ROUTE 149 (EAST HADDAM MOODUS ROAD) OVER DYKAS BROOK

TOWN(S): EAST HADDAM

DRAWING TITLE: ABUTMENT 1 PLAN, ELEVATION, AND SECTION

PROJECT NO.: 0040-0148

DRAWING NO.: S-11
SHEET NO.: 04-12

LASTED SAVED BY: lpena FILE NAME: c:\pw-wkrdir\primeeng-pw-01\ct - luis pena\dms07112\SB_CP_0040_0148_StrBorder.dgn
PLOTTED DATE: 4/21/2025

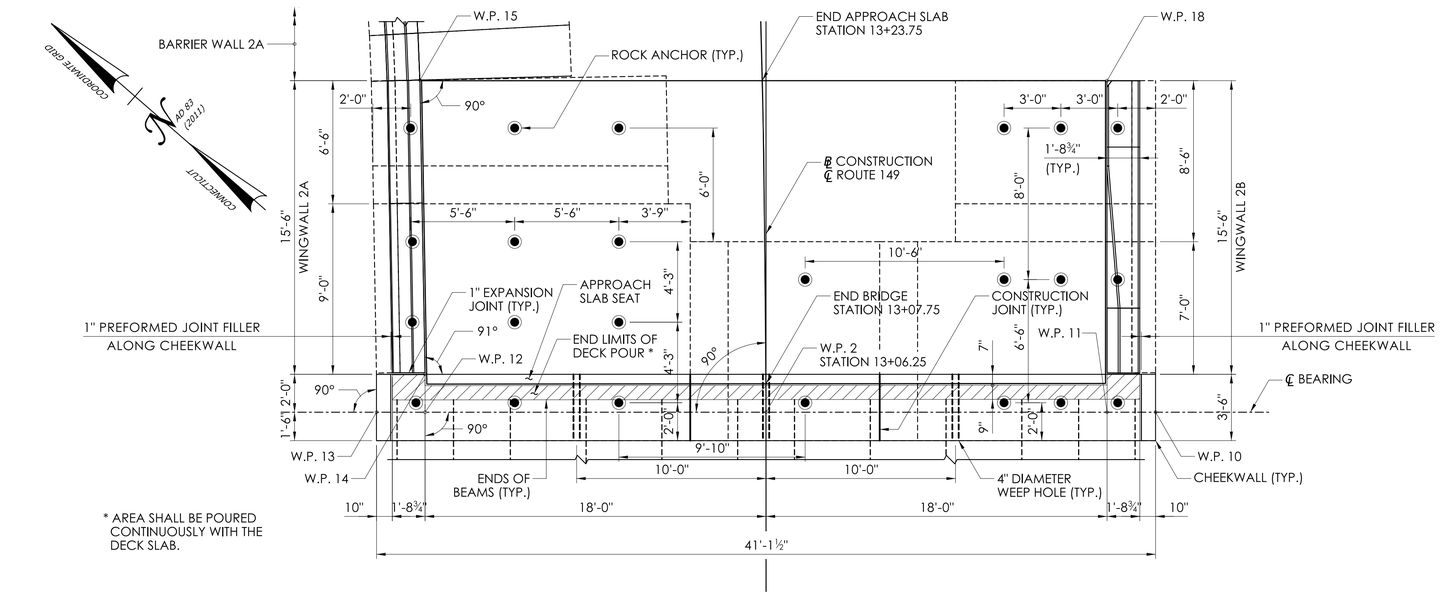

* AREA SHALL BE POURED CONTINUOUSLY WITH THE DECK SLAB.

ABUTMENT 2 PLAN

SCALE: 1/4"=1'-0"

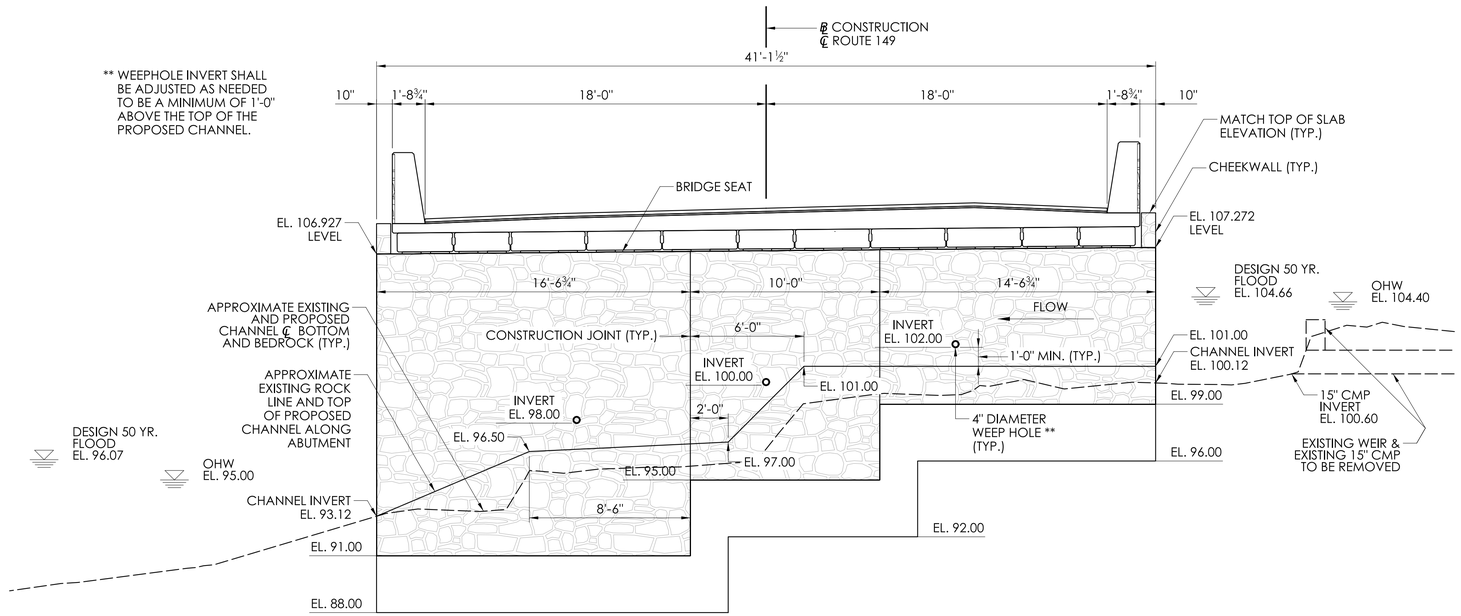

** WEEPHOLE INVERT SHALL BE ADJUSTED AS NEEDED TO BE A MINIMUM OF 1'-0" ABOVE THE TOP OF THE PROPOSED CHANNEL.

ABUTMENT 2 ELEVATION

SCALE: 1/4"=1'-0"

MAXIMUM DESIGN BEARING PRESSURES

STRENGTH I LIMIT STATE: 11.98 KSF
SERVICE I LIMIT STATE: 8.39 KSF

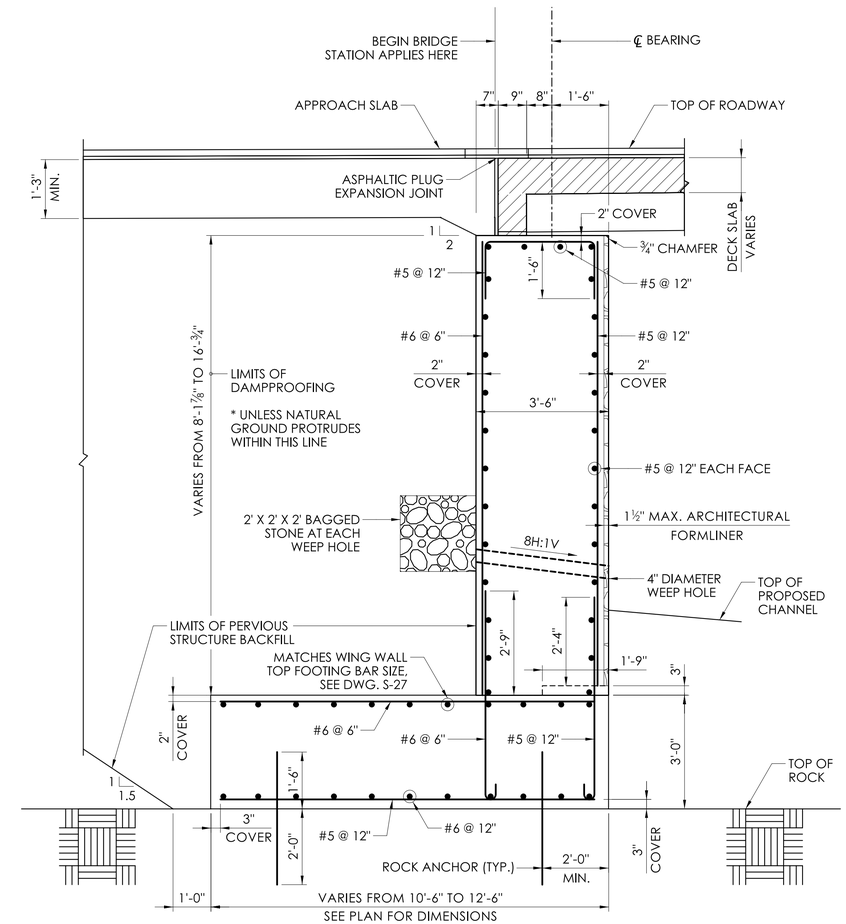

TYPICAL SECTION

SCALE: 1/2"=1'-0"

NOTES:

1. FOR ASPHALTIC PLUG EXPANSION JOINT DETAILS, SEE DWG. S-23.
2. FOR ROCK ANCHORAGE DETAILS, SEE DWG. S-13.
3. FOR ABUTMENT DETAILS, SEE DWG. S-13.
4. FOR APPROACH SLAB DETAILS, SEE DWG. S-22.
5. BEDROCK SHALL BE EXCAVATED TO THE ELEVATIONS SHOWN FOR THE CONSTRUCTION OF FOOTINGS. IF NO BEDROCK IS FOUND AT THE PROPOSED BOTTOM OF FOOTING ELEVATIONS, THE CONTRACTOR SHALL EXCAVATE UNTIL BEDROCK IS REACHED. THIS ADDITIONAL EXCAVATION SHALL BE FILLED WITH CONCRETE TO CONSTRUCT THE FOOTINGS, MAINTAINING THE TOP OF FOOTING ELEVATIONS. SEE DETAIL ON DWG. S-13.
6. ANY ADDITIONAL EXCAVATION REQUIRED WILL BE PAID FOR UNDER ITEM "STRUCTURE EXCAVATION – ROCK (COMPLETE)."
7. PAYMENT FOR ROCK ANCHORS WILL BE COVERED UNDER ITEM "DRILLING HOLES AND BONDING ANCHORS."

REV.	DATE	REVISION DESCRIPTION

SIGNATURE BLOCK:
L. PEÑA — DESIGNER/DRAFTER
M. MCCLUSKEY — CHECKED BY:

PRIME AE, 100 GREAT MEADOW ROAD, WETHERSFIELD, CT 06109

CTDOT — CONNECTICUT DEPARTMENT OF TRANSPORTATION

PROJECT TITLE: REPLACEMENT OF BRIDGE NO. 02698 CARRYING ROUTE 149 (EAST HADDAM MOODUS ROAD) OVER DYKAS BROOK

TOWN(S): EAST HADDAM

DRAWING TITLE: ABUTMENT 2 PLAN, ELEVATION, AND SECTION

PROJECT NO.: 0040-0148

DRAWING NO.: S-12

SHEET NO.: 04-13

LASTED SAVED BY: lpena FILE NAME: c:\pw-wkrdir\primeeng-pw-01\ct - luis pena\dms07112\SB_CP_0040_0148_StrBorder.dgn
PLOTTED DATE: 4/21/2025

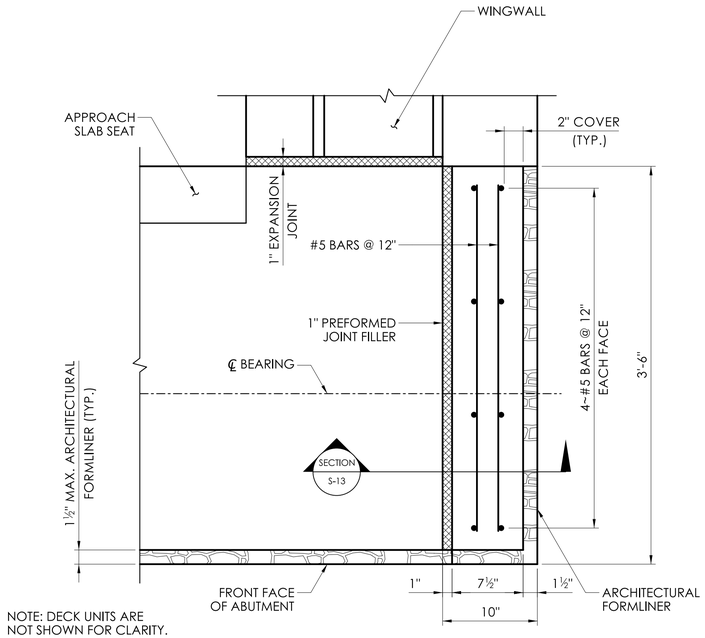

NOTE: DECK UNITS ARE NOT SHOWN FOR CLARITY.

PLAN

SCALE: 1½"=1'-0"

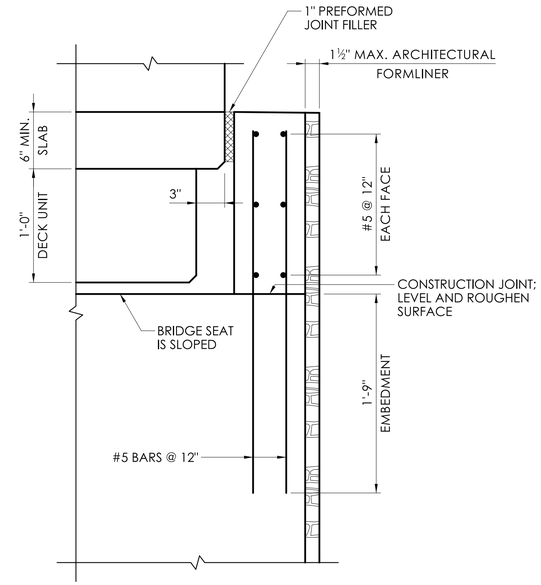

SECTION

SCALE: 1½"=1'-0"

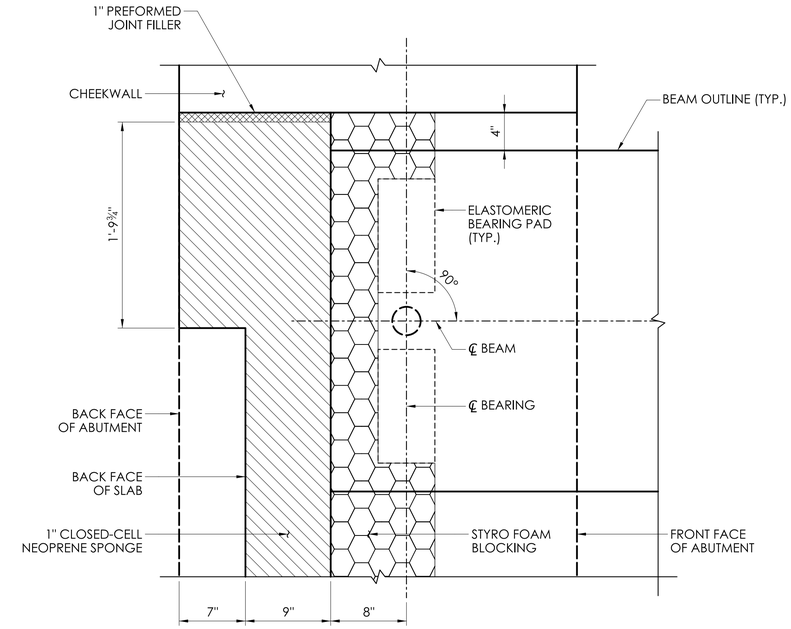

BLOCKING PLAN

SCALE: 1½"=1'-0"

TYPICAL CHEEKWALL DETAILS

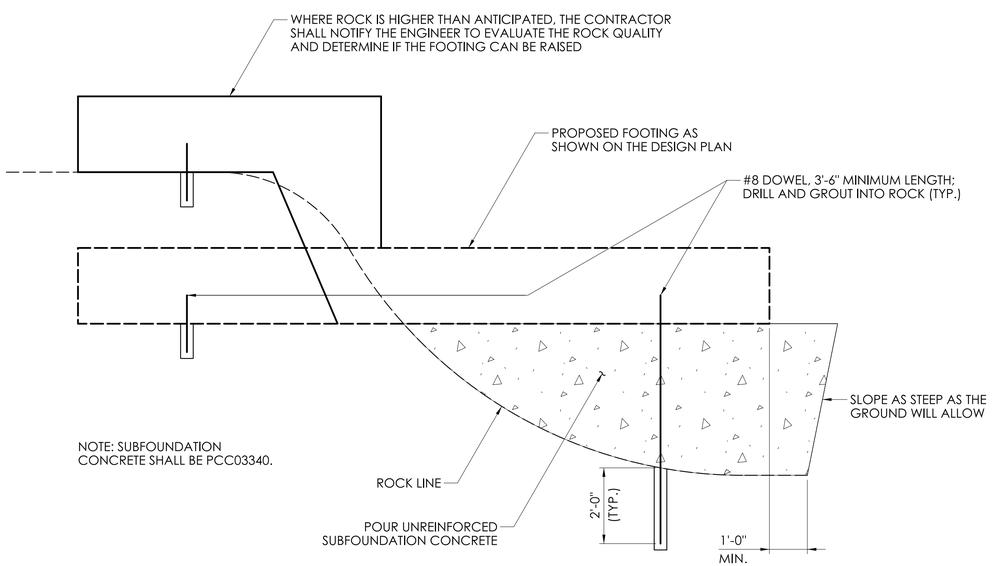

NOTE: SUBFOUNDATION CONCRETE SHALL BE PCC03340.

FOOTING DETAIL FOR POSSIBLE VARIATION IN ROCK LINE

SCALE: NOT TO SCALE

NOTES:

THE BOTTOM OF FOOTING ELEVATIONS FOR THE EXISTING ABUTMENT AND WING WALL ARE UNKNOWN AND ARE ASSUMED TO MATCH THE PROPOSED BOTTOM OF FOOTING ELEVATIONS.

THE TOP OF ROCK WILL VARY ACROSS THE PROJECT, AND ADJUSTMENTS TO THE BOTTOM OF FOOTING ELEVATIONS SHOULD BE ANTICIPATED. BEDROCK SHALL BE EXCAVATED TO THE ELEVATIONS SHOWN FOR THE CONSTRUCTION OF FOOTINGS. IF NO BEDROCK IS FOUND, OR IF THE ROCK IS NOT SOUND AT THE PROPOSED BOTTOM OF FOOTING ELEVATIONS, THE CONTRACTOR SHALL CONTINUE EXCAVATION UNTIL COMPETENT BEDROCK IS REACHED. THE LOCATION OF COMPETENT ROCK SHALL BE AS APPROVED BY CTDOT OR THE ENGINEER. ANY ADDITIONAL EXCAVATION REQUIRED SHALL BE FILLED WITH SUBFOUNDATION CONCRETE UP TO THE PROPOSED BOTTOM OF FOOTING ELEVATION.

ADDITIONAL EXCAVATION REQUIRED WILL BE PAID FOR UNDER THE ITEM "STRUCTURE EXCAVATION – ROCK (COMPLETE)."

THE FOOTING SHALL BE CONSTRUCTED ON TOP OF THE BEDROCK AND ANCHORED TO THE ROCK WITH ROCK ANCHORS. THE BEDROCK SURFACE SHALL BE FREE OF SOIL AND IN AN ACCEPTABLE DRY CONDITION. ALL WATER SHALL BE PROPERLY DIVERTED FROM FOUNDATION EXCAVATIONS TO ALLOW FOR CONCRETE PLACEMENT AND INSPECTION.

THE CONTRACTOR SHALL SUBMIT A ROCK ANCHOR SUBMITTAL FOR REVIEW AND APPROVAL BY THE ENGINEER. THE SUBMITTAL SHALL INCLUDE PROPOSED DOWEL LOCATIONS, DRILLING METHODS, HOLE PREPARATION AND CLEANING METHODS, GROUT MATERIAL, AND INSTALLATION PROCEDURES.

ROCK ANCHORS SHALL BE #8 GRADE 60 GALVANIZED ASTM A1035 REBAR. ROCK ANCHORS SHALL BE PLACED IN 2-INCH-DIAMETER HOLES AS SHOWN. HOLES SHALL BE FILLED WITH NON-SHRINK GROUT HAVING A MINIMUM COMPRESSIVE STRENGTH OF 5,000 PSI IN SEVEN DAYS WHEN TESTED PER AASHTO T106. THE NON-SHRINK GROUT SHALL HAVE A MINIMUM EXPANSION OF 0% AFTER SEVEN DAYS WHEN TESTED PER AASHTO T160.

ROCK ANCHORS SHALL EXTEND A MINIMUM OF 1'-6" INTO THE FOOTING CONCRETE AND 2'-0" INTO THE ROCK, REGARDLESS OF THE SUBFOUNDATION CONCRETE THICKNESS. THE CONTRACTOR SHALL WAIT AT LEAST 24 HOURS FOR THE GROUT TO GAIN STRENGTH BEFORE PLACING FOOTING CONCRETE OR SUBFOUNDATION CONCRETE.

IT IS ASSUMED THAT HALF OF THE BARRIER WALL DOWELS MAY BE PLACED ON A SUBFOUNDATION.

THE COST OF ROCK ANCHOR INSTALLATION, INCLUDING MATERIALS, LABOR, AND EQUIPMENT, WILL BE PAID FOR UNDER "DRILLING HOLES AND BONDING ANCHORS."

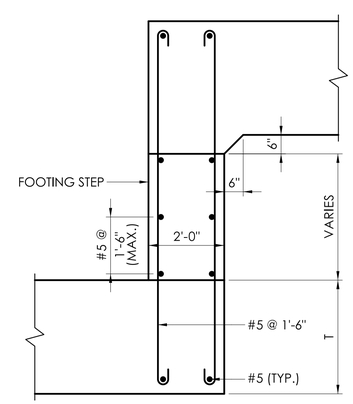

STEPPED FOOTING > (T + 6")

SCALE: ½" = 1'-0"

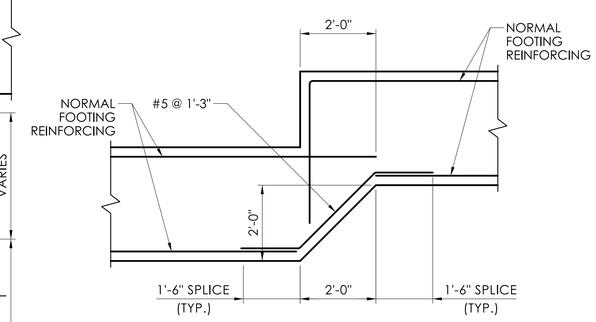

STEPPED FOOTING – 2'-0"

SCALE: ½" = 1'-0"

REV.	DATE	REVISION DESCRIPTION

SIGNATURE BLOCK:

DESIGNER/DRAFTER: L. PEÑA — CHECKED BY: M. MCCLUSKEY

PRIME AE, 100 GREAT MEADOW ROAD, WETHERSFIELD, CT 06109

CTDOT — CONNECTICUT DEPARTMENT OF TRANSPORTATION

PROJECT TITLE: REPLACEMENT OF BRIDGE NO. 02698 CARRYING ROUTE 149 (EAST HADDAM MOODUS ROAD) OVER DYKAS BROOK

TOWN(S): EAST HADDAM

DRAWING TITLE: ABUTMENT DETAILS

PROJECT NO.: 0040-0148

DRAWING NO.: S-13

SHEET NO.: 04-14

LASTED SAVED BY: lpena FILE NAME: c:\pw-wkrdir\primeeng-pw-01\c1-luis pena\dms07112\SB_CP_0040_0148_StrBorder.dgn

PLOTTED DATE: 4/21/2025

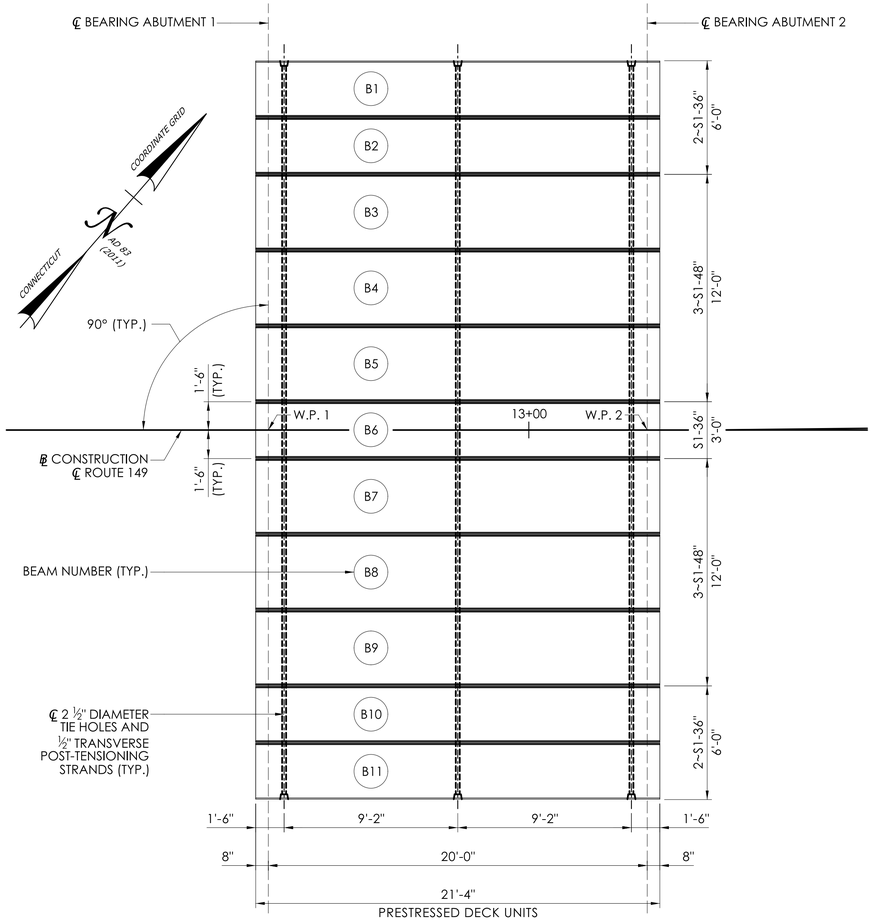

FRAMING PLAN

SCALE: ¼" =1'-0"

WORKING POINT LAYOUT		
POINT	NORTHING	EASTING
W.P. 1	740,649.639405	1,079,387.446256
W.P. 2	740,662.768149	1,079,402.533869

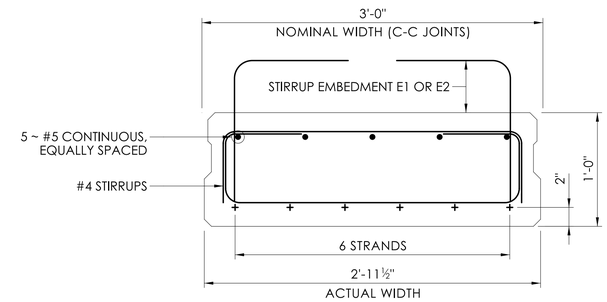

SI-36" DECK UNIT SECTION

SCALE: 1½" =1'-0"

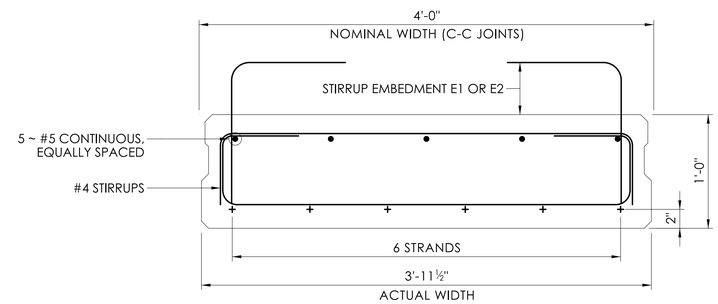

SI-48" DECK UNIT SECTION

SCALE: 1½" =1'-0"

PRESTRESSED CONCRETE NOTES

1. PRESTRESSED CONCRETE SHALL CONFORM TO THE FOLLOWING REQUIREMENTS:
   MINIMUM COMPRESSIVE STRENGTH AT TRANSFER f'ci = 5,200 PSI
   MINIMUM 28 DAY COMPRESSIVE STRENGTH f'c = 6,500 PSI
2. PRESTRESSING STRANDS SHALL BE 0.6" DIA., 7 WIRE, UNCOATED, LOW RELAXATION STRANDS CONFORMING TO THE REQUIREMENTS OF AASHTO M203 (ASTM A416), GRADE 270, AND SHALL CONFORM TO THE FOLLOWING REQUIREMENTS:
   ULTIMATE TENSILE STRENGTH fs = 270 KSI
   INITIAL JACKING TENSION fi = 43,943 LBS PER STRAND
3. PRESTRESSING STRANDS SHALL BE PLACED AT 2" ON CENTER MINIMUM, SHALL HAVE A MINIMUM COVER OF 1½", SHALL BE DISTRIBUTED OVER THE BEAM WIDTH AS EVENLY AS POSSIBLE, AND SHALL HAVE STRAND PATTERNS THAT ARE SYMMETRICAL ABOUT THE CENTERLINE OF THE BEAM.
4. ALL NON-PRESTRESSED REINFORCEMENT SHALL CONFORM TO ASTM A615 GRADE 60 AND SHALL HAVE A MINIMUM COVER OF 2" UNLESS OTHERWISE NOTED.
5. ALL NON-PRESTRESSED REINFORCEMENT IN THE PRESTRESSED DECK UNITS EXTENDING ABOVE THE DECK, INCLUDING STIRRUPS, BAR TIES, AND CHAIRS, SHALL BE GALVANIZED AND SHALL BE INCLUDED IN THE ITEMS "PRESTRESSED DECK UNITS (x)" AS APPLICABLE.
6. ENDS OF THE PRESTRESSED DECK UNITS SHALL BE VERTICAL UPON APPLICATION OF FULL DEAD LOADS.
7. IT IS NOT INTENDED THAT THE DECK UNITS BE INSTALLED IN CONTACT WITH EACH OTHER, BUT RATHER THAT THE CENTERLINE DISTANCE BETWEEN EACH BE 3'-0" OR 4'-0".
8. THE DRILLING OF HOLES IN, OR THE USE OF POWER-ACTUATED TOOLS ON, THE DECK UNITS WILL NOT BE PERMITTED.
9. THE CONTRACTOR SHALL SUBMIT FOR REVIEW AN ALTERNATE PRESTRESSED DECK UNIT DESIGN.
10. THE DECK UNITS SHALL BE PLACED AT THE NOMINAL SPACING SHOWN ON THE PLAN WITH A GAP BETWEEN THE UNITS.
11. GROUT FOR SHEAR KEYS SHALL BE RODDED OR VIBRATED TO ENSURE THAT ALL VOIDS IN THE SHEAR KEYS ARE FILLED.

CAMBER NOTES

1. AT TRANSFER: CAMBER DUE TO PRESTRESS FORCE AT TRANSFER, MINUS THE DEFLECTION DUE TO BEAM WEIGHT.
2. AT ERECTION: CAMBER (DUE TO PRESTRESS FORCE AT TRANSFER, MINUS DEFLECTION DUE TO BEAM WEIGHT) PRESENT APPROXIMATELY 30–60 DAYS AFTER TRANSFER.
3. FINAL: LONG-TERM CAMBER PRESENT AFTER ALL DEAD LOADS ARE APPLIED TO THE STRUCTURE AND AFTER LONG-TERM CREEP AND RELAXATION HAVE TAKEN PLACE.
4. CAMBERS SHOWN AS POSITIVE ARE UPWARD. CAMBERS SHOWN AS NEGATIVE ARE DOWNWARD.

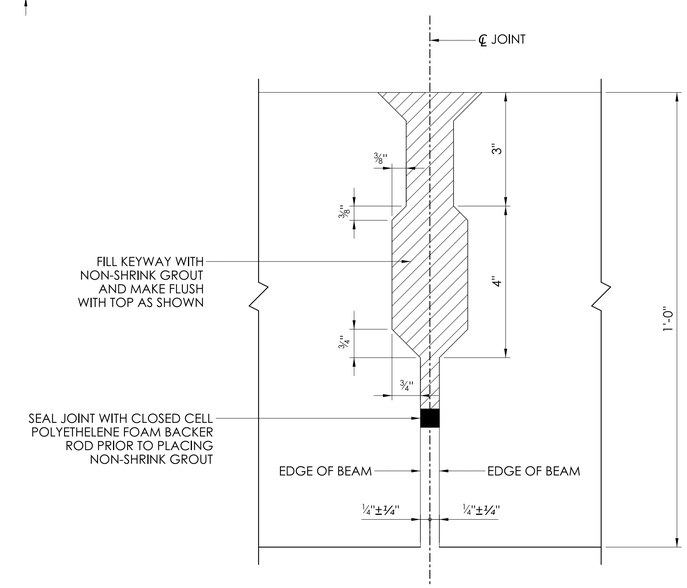

TYPICAL LONGITUDINAL JOINT

NOT TO SCALE

PRESTRESSED DECK UNIT DATA

DECK UNIT MARK	STRAND DATA			ESTIMATED CAMBER AT MIDSPAN			NOMINAL WIDTH	DECK UNIT LENGTH*	SKEW ANGLE	STIRRUP EMBEDMENT (E)	
	TYPE	NO. OF STRANDS	Ycg (IN.)	AT TRANSFER (IN.)	AT ERECTION (28 DAYS) (IN.)	FINAL (LONG TERM) (IN.)				E1 AT END (IN.)	E2 AT MIDSPAN (IN.)
B1 AND B11	STRAIGHT	6	2.00"	0.27"	0.48"	0.30"	3'-0"	21'-4"	0°	3.00"	3.00"
B2 AND B10	STRAIGHT	6	2.00"	0.27"	0.48"	0.30"	3'-0"	21'-4"	0°	3.00"	3.00"
B3 AND B9	STRAIGHT	6	2.00"	0.18"	0.32"	0.30"	4'-0"	21'-4"	0°	3.00"	3.00"
B4 AND B8	STRAIGHT	6	2.00"	0.18"	0.32"	0.30"	4'-0"	21'-4"	0°	3.00"	3.00"
B5 AND B7	STRAIGHT	6	2.00"	0.18"	0.32"	0.30"	4'-0"	21'-4"	0°	3.00"	3.00"
B6	STRAIGHT	6	2.00"	0.27"	0.48"	0.30"	3'-0"	21'-4"	0°	3.00"	3.00"

* MEASURED ALONG CENTERLINE OF DECK UNIT.

REV.	DATE	REVISION DESCRIPTION

SIGNATURE BLOCK:
L. PEÑA — DESIGNER/DRAFTER:
M. MCCLUSKEY — CHECKED BY:

PRIME AE, 100 GREAT MEADOW ROAD, WETHERSFIELD, CT 06109

CTDOT — CONNECTICUT DEPARTMENT OF TRANSPORTATION

PROJECT TITLE: REPLACEMENT OF BRIDGE NO. 02698 CARRYING ROUTE 149 (EAST HADDAM MOODUS ROAD) OVER DYKAS BROOK

TOWN(S): EAST HADDAM

DRAWING TITLE: FRAMING PLAN AND DECK UNIT DATA

PROJECT NO.: 0040-0148

DRAWING NO.: S-14

SHEET NO.: 04-15

LASTED SAVED BY: lpena FILE NAME: c:\pw-wkrdir\primeeng-pw-01\c1 - luis pena\dms07112\SB_CP_0040_0148_StrBorder.dgn
PLOTTED DATE: 4/21/2025

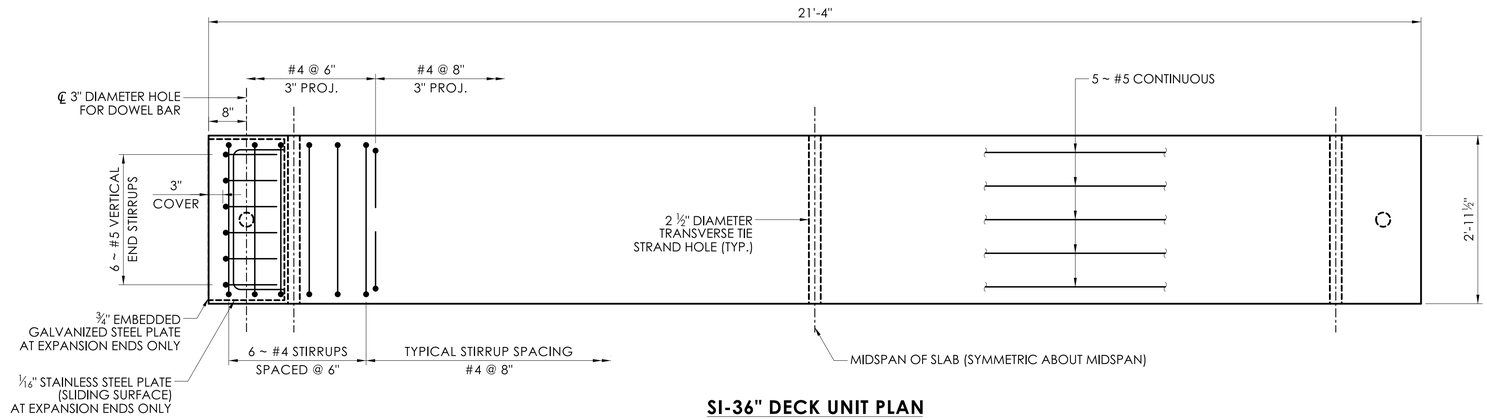

SI-36" DECK UNIT PLAN

SCALE: ¾" = 1'-0"

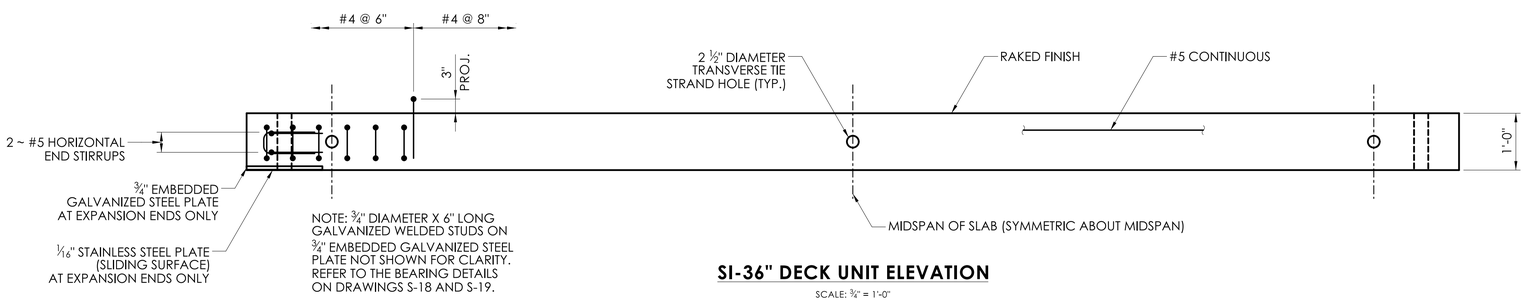

SI-36" DECK UNIT ELEVATION

SCALE: ¾" = 1'-0"

BEAM NOTES:

1. THE 2 ¼" COVER SHOWN IS REQUIRED TO FACILITATE THE PLACEMENT OF THE BOTTOM ROW OF PRESTRESSING STRANDS. THE FABRICATOR MAY REDUCE THE COVER TO A MINIMUM OF 1 ½" IF NO CONFLICTS EXIST WITH THE PRESTRESSING STRANDS.
2. EXTEND THE LONGITUDINAL LEGS OF THE END REINFORCING TO A MINIMUM DISTANCE EQUAL TO THE DEPTH OF THE BEAM OR 12" INTO THE WEB OF THE SECTION, WHICHEVER IS GREATER.
3. HORIZONTAL LEGS OF THE VERTICAL STIRRUPS MUST BE EQUAL TO THE DEPTH OF THE BEAM.
4. SPAN STIRRUPS TO AVOID CONFLICTS WITH TRANSVERSE TIE STRAND HOLES.
5. THE VERTICAL LOCATION OF THE TRANSVERSE TIE STRANDS MUST BE COORDINATED WITH THE LOCATION OF THE PRESTRESSED STRANDS AND ADJUSTED AS NECESSARY BY THE FABRICATOR.
6. TOPS OF BEAMS MUST BE INTENTIONALLY ROUGHENED TO A ⅛" DEPTH TO PROVIDE AN ADEQUATE CONTACT SURFACE WITH THE CONCRETE SHEAR SLAB.
7. THE DECK UNITS SHALL BE PLACED AT THE NOMINAL SPACING SHOWN ON THE PLAN WITH A ½" GAP BETWEEN UNITS. THE WIDTH OF THIS GAP MAY VARY DUE TO THE SWEEP OF THE BEAMS.
8. THE SHEAR KEY SHALL BE OMITTED ON THE OUTSIDE FACE OF FASCIA BEAMS.
9. DRILLING HOLES IN, OR USING POWER-ACTUATED TOOLS ON, PRESTRESSED MEMBERS WILL NOT BE PERMITTED.

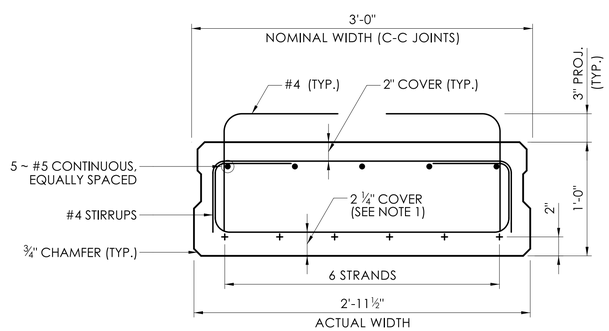

SI-36" DECK UNIT SECTION

SCALE: 1½" =1'-0"

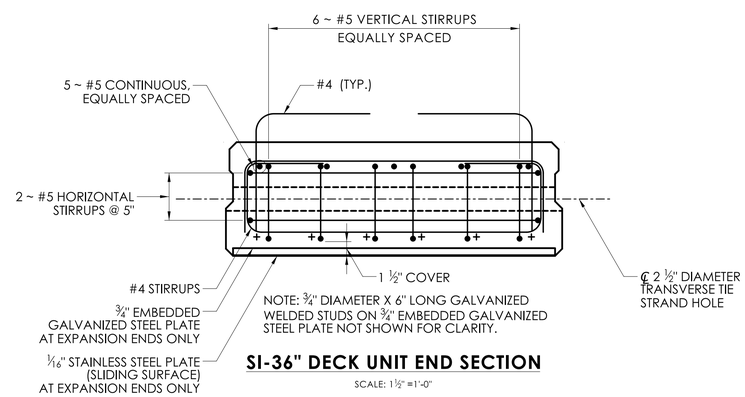

SI-36" DECK UNIT END SECTION

SCALE: 1½" =1'-0"

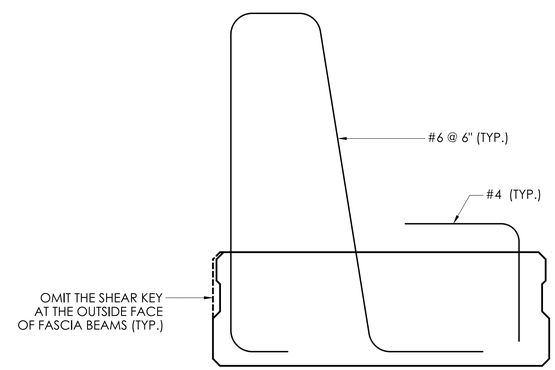

NOTE: BEAM REINFORCEMENT AND PRESTRESSING STRANDS ARE NOT SHOWN FOR CLARITY.

SUPPLEMENTAL REINFORCEMENT DETAIL AT FASCIA BEAMS

SCALE: 1½" =1'-0"

REV.	DATE	REVISION DESCRIPTION

SIGNATURE BLOCK:

L. PEÑA — DESIGNER/DRAFTER:
M. MCCLUSKEY — CHECKED BY:

PRIME AE, 100 GREAT MEADOW ROAD, WETHERSFIELD, CT 06109

CTDOT — CONNECTICUT DEPARTMENT OF TRANSPORTATION

PROJECT TITLE: REPLACEMENT OF BRIDGE NO. 02698 CARRYING ROUTE 149 (EAST HADDAM MOODUS ROAD) OVER DYKAS BROOK

TOWN(S): EAST HADDAM

DRAWING TITLE: DECK UNIT DETAILS - 1

PROJECT NO.: 0040-0148

DRAWING NO.: S-15

SHEET NO.: 04-16

LASTED SAVED BY: lpena FILE NAME: c:\pw-wkrdir\primeeng-pw-01\c1 - luis pena\dms07112\SB_CP_0040_0148_StrBorder.dgn
PLOTTED DATE: 4/21/2025

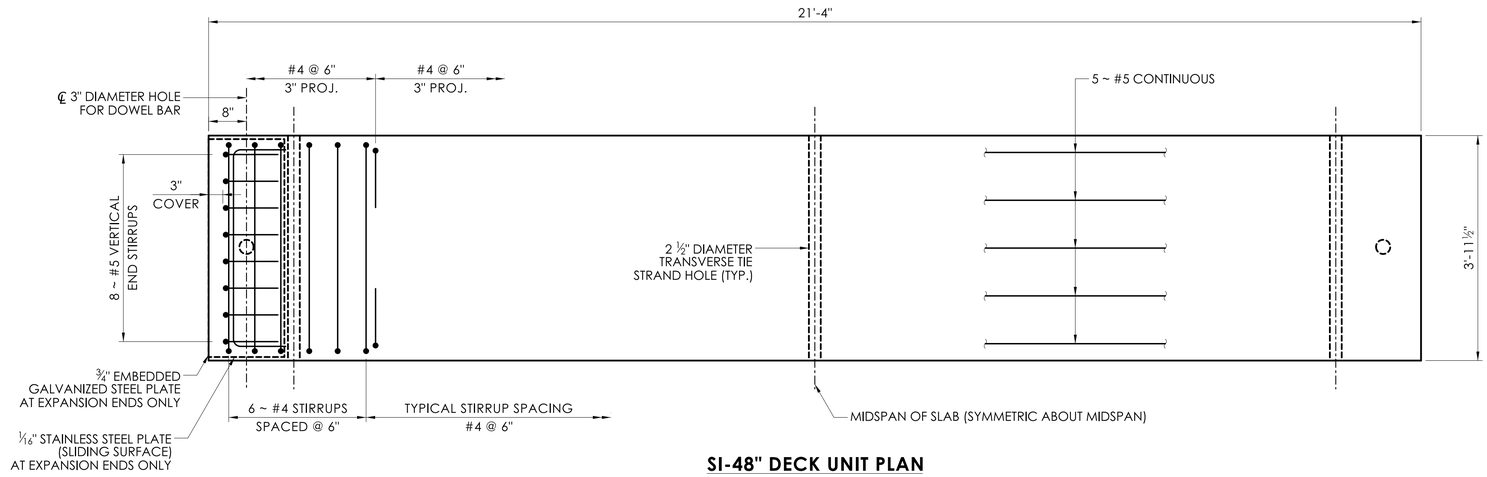

SI-48" DECK UNIT PLAN

SCALE: ¾" = 1'-0"

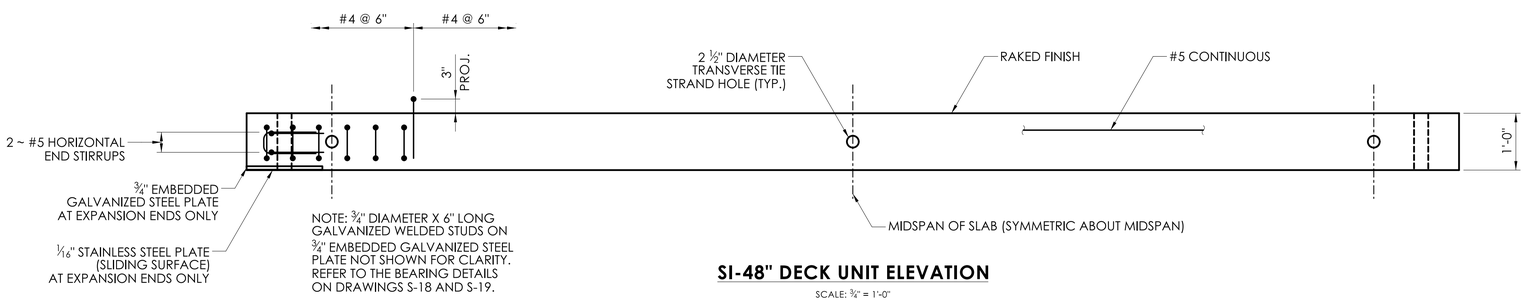

SI-48" DECK UNIT ELEVATION

SCALE: ¾" = 1'-0"

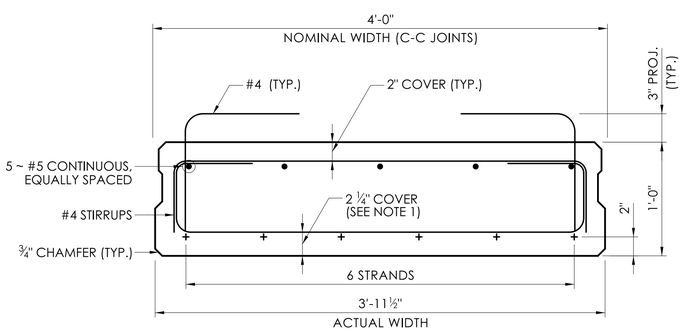

SI-48" DECK UNIT SECTION

SCALE: 1½" =1'-0"

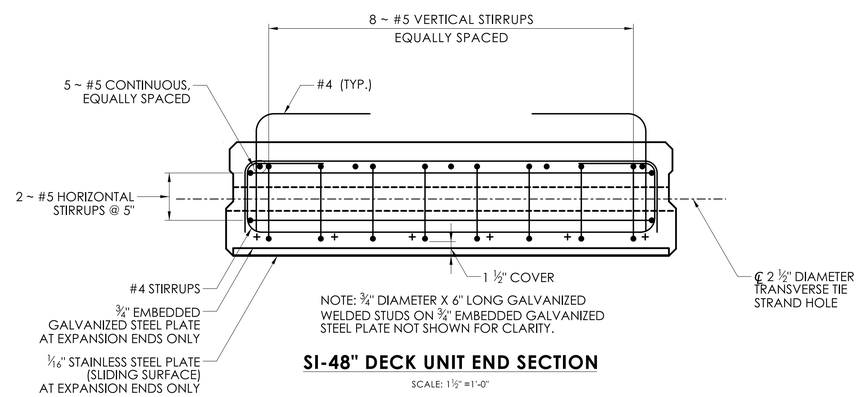

SI-48" DECK UNIT END SECTION

SCALE: 1½" =1'-0"

BEAM NOTES:

1. THE 2 ¼" COVER SHOWN IS REQUIRED TO FACILITATE THE PLACEMENT OF THE BOTTOM ROW OF PRESTRESSING STRANDS. THE FABRICATOR MAY REDUCE THE COVER TO A MINIMUM OF 1 ½" IF NO CONFLICTS EXIST WITH THE PRESTRESSING STRANDS.
2. EXTEND THE LONGITUDINAL LEGS OF THE END REINFORCING TO A MINIMUM DISTANCE EQUAL TO THE DEPTH OF THE BEAM OR 12" INTO THE WEB OF THE SECTION, WHICHEVER IS GREATER.
3. HORIZONTAL LEGS OF THE VERTICAL STIRRUPS MUST BE EQUAL TO THE DEPTH OF THE BEAM.
4. SPAN STIRRUPS TO AVOID CONFLICTS WITH TRANSVERSE TIE STRAND HOLES.
5. THE VERTICAL LOCATION OF THE TRANSVERSE TIE STRANDS MUST BE COORDINATED WITH THE LOCATION OF THE PRESTRESSED STRANDS AND ADJUSTED AS NECESSARY BY THE FABRICATOR.
6. TOPS OF BEAMS MUST BE INTENTIONALLY ROUGHENED TO A ⅛" DEPTH TO PROVIDE AN ADEQUATE CONTACT SURFACE WITH THE CONCRETE SHEAR SLAB.
7. THE DECK UNITS SHALL BE PLACED AT THE NOMINAL SPACING SHOWN ON THE PLAN WITH A ½" GAP BETWEEN UNITS. THE WIDTH OF THIS GAP MAY VARY DUE TO THE SWEEP OF THE BEAMS.
8. THE SHEAR KEY SHALL BE OMITTED ON THE OUTSIDE FACE OF FASCIA BEAMS.
9. DRILLING HOLES IN, OR USING POWER-ACTUATED TOOLS ON, PRESTRESSED MEMBERS WILL NOT BE PERMITTED.

REV.	DATE	REVISION DESCRIPTION

SIGNATURE BLOCK:

L. PEÑA — DESIGNER/DRAFTER:

M. MCCLUSKEY — CHECKED BY:

PRIME AE, 100 GREAT MEADOW ROAD, WETHERSFIELD, CT 06109

CTDOT — CONNECTICUT DEPARTMENT OF TRANSPORTATION

PROJECT TITLE: REPLACEMENT OF BRIDGE NO. 02698 CARRYING ROUTE 149 (EAST HADDAM MOODUS ROAD) OVER DYKAS BROOK

TOWN(S): EAST HADDAM

DRAWING TITLE: DECK UNIT DETAILS - 2

PROJECT NO.: 0040-0148

DRAWING NO.: S-16

SHEET NO.: 04-17

LASTED SAVED BY: lpena FILE NAME: c:\pw-wkrdir\primeeng-pw-01\c1 - luis pena\dms07112\SB_CP_0040_0148_StrBorder.dgn
PLOTTED DATE: 4/21/2025

NOTE:

THE VERTICAL LOCATION OF THE TRANSVERSE TIE STRAND MUST BE COORDINATED WITH THE LOCATION OF THE PRESTRESSED STRANDS AND ADJUSTED AS NECESSARY BY THE FABRICATOR.

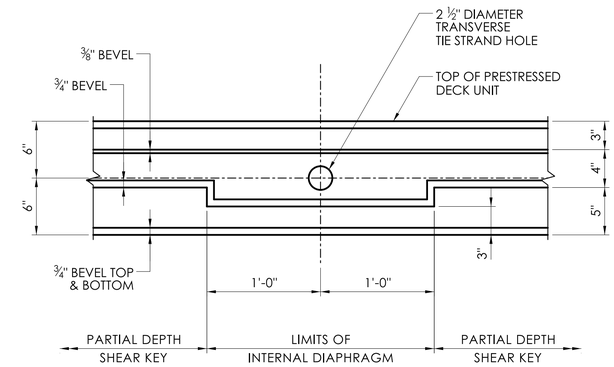

INTERNAL DIAPHRAGM DETAIL

SCALE: 1 ½" = 1'-0"

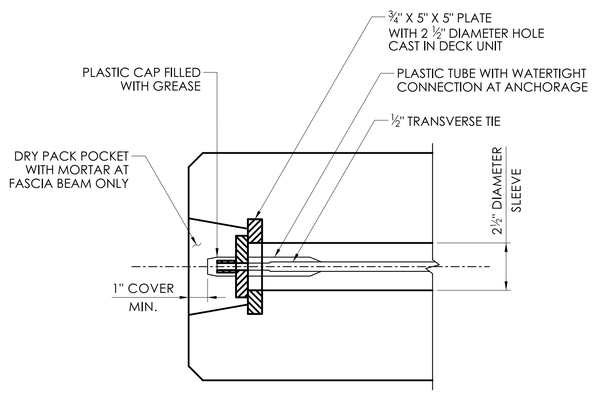

TRANSVERSE TIE POCKET DETAIL

SCALE: 3" = 1'-0"

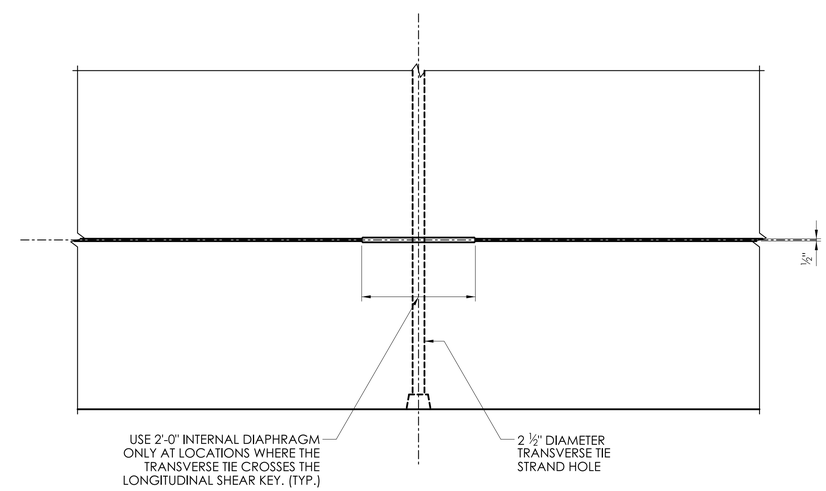

TRANSVERSE TIE STRAND ARRANGEMENT DETAIL

SCALE: ¾" = 1'-0"

TRANSVERSE TIE TENSIONING NOTES:

1. AFTER ERECTING THE PRESTRESSED DECK UNITS FOR THE CONSTRUCTION STAGE, INSTALL THE TRANSVERSE TIES.
2. TENSION EACH TRANSVERSE TIE TO 5 KIPS.
3. SEAL THE BOTTOM OF THE LONGITUDINAL SHEAR KEYS WITH CLOSED-CELL POLYETHYLENE FOAM BACKER ROD AND PLACE NON-SHRINK GROUT IN THE LONGITUDINAL SHEAR KEYS AND INTERNAL DIAPHRAGMS. THE GROUT SHALL BE RODDED OR VIBRATED TO ENSURE THAT ALL THE VOIDS IN THE SHEAR KEYS ARE FILLED.
4. WHEN THE GROUT HAS ATTAINED A COMPRESSIVE STRENGTH OF 1,500 PSI, TENSION EACH TRANSVERSE TIE TO 30 KIPS.
5. NO ADDITIONAL DEAD LOADS OR LIVE LOADS SHALL BE APPLIED TO THE BUTTED DECK UNITS UNTIL THE TRANSVERSE TIES HAVE BEEN FULLY TENSIONED AND THE GROUT IN THE LONGITUDINAL SHEAR KEYS HAS REACHED A SEVEN-DAY COMPRESSIVE STRENGTH OF 4,500 PSI.
6. OTHER ANCHORAGE SYSTEMS MAY BE SUBSTITUTED WITH THE APPROVAL OF THE ENGINEER. ALTERNATE ANCHORAGE SYSTEMS SHALL BE WATERTIGHT AND CORROSION-PROOF.
7. TRANSVERSE TIES SHALL BE COVERED BY A SEAMLESS POLYPROPYLENE SHEATH WITH CORROSION-INHIBITING GREASE BETWEEN THE STRAND AND SHEATH FOR THE FULL LENGTH OF THE STRAND, EXCEPT AT THE ANCHORAGE LOCATION.

REV.	DATE	REVISION DESCRIPTION

SIGNATURE BLOCK:

L. PEÑA — DESIGNER/DRAFTER:

M. MCCLUSKEY — CHECKED BY:

PRIME AE, 100 GREAT MEADOW ROAD, WETHERSFIELD, CT 06109

CONNECTICUT DEPARTMENT OF TRANSPORTATION

PROJECT TITLE: REPLACEMENT OF BRIDGE NO. 02698 CARRYING ROUTE 149 (EAST HADDAM MOODUS ROAD) OVER DYKAS BROOK

TOWN(S): EAST HADDAM

DRAWING TITLE: DECK UNIT DETAILS - 3

PROJECT NO.: 0040-0148

DRAWING NO.: S-17

SHEET NO.: 04-18

LASTED SAVED BY: lpena FILE NAME: c:\pw-wkrdir\primeeng-pw-01\ct - luis pena\dms07112\SB_CP_0040_0148_StrBorder.dgn
PLOTTED DATE: 4/21/2025

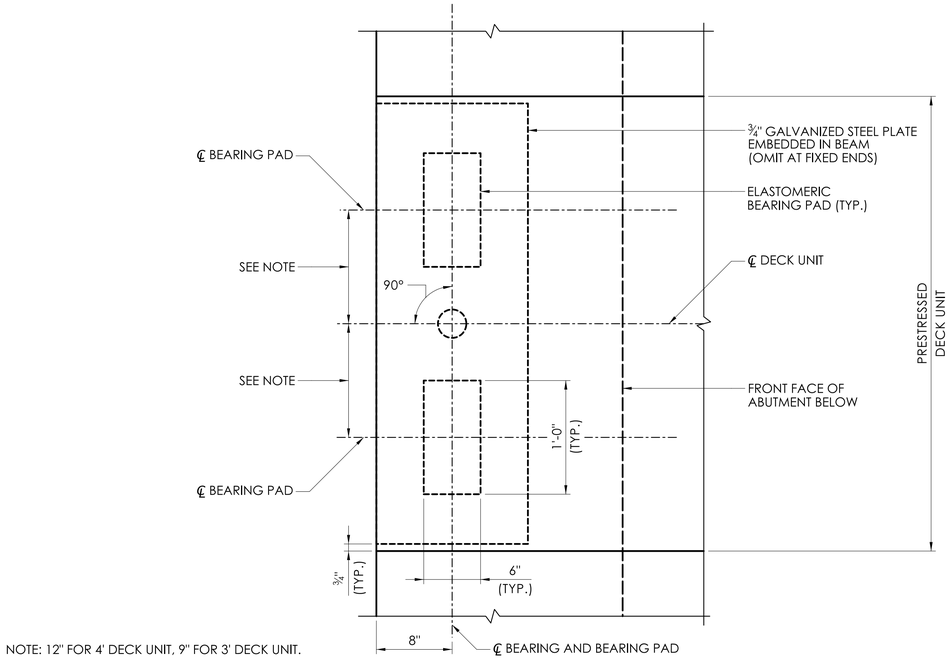

NOTE: 12" FOR 4' DECK UNIT, 9" FOR 3' DECK UNIT.

PLAN
ELASTOMERIC BEARING LAYOUT
SCALE: 1½" =1'-0"

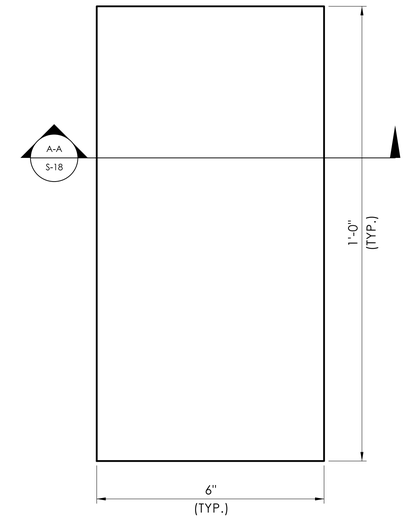

PLAN
SCALE: 6" =1'-0"

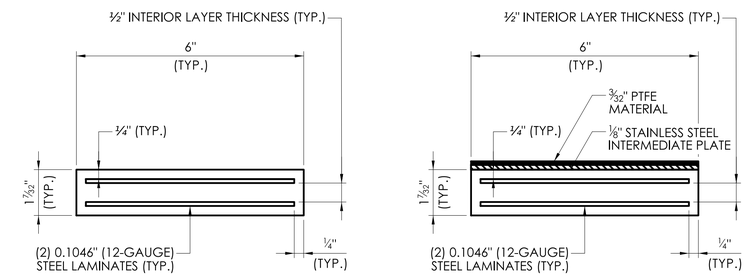

SECTION A-A
FIXED BEARING
SCALE: 6" =1'-0"

SECTION A-A
EXPANSION BEARING
SCALE: 6" =1'-0"

ELASTOMERIC BEARING PAD DETAIL
SCALE: 6" =1'-0"

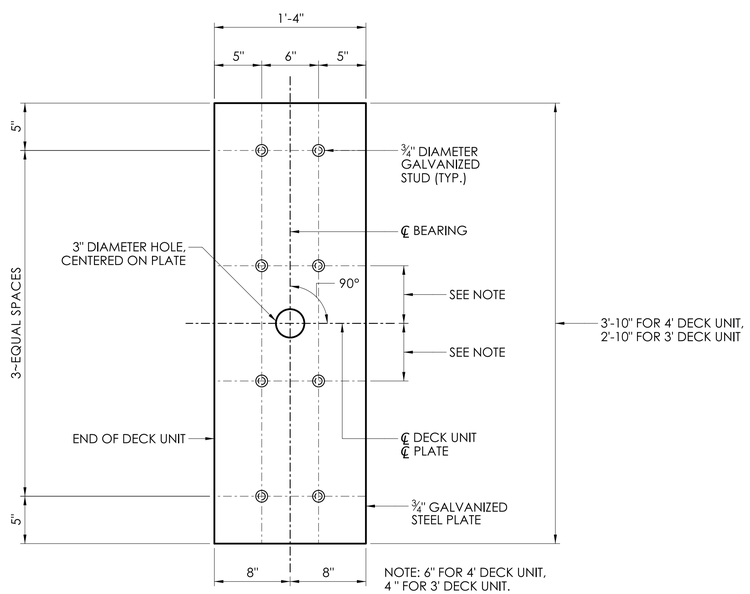

PLAN
EMBEDDED PLATE DETAIL
SCALE: 1½" =1'-0"

BEARING NOTES:

1. ELASTOMERIC BEARINGS SHALL HAVE A 60 DUROMETER HARDNESS.
2. THE ELASTOMER SHALL CONTAIN ONLY VIRGIN POLYCHLOROPRENE (NEOPRENE) AS THE RAW POLYMER AND HAVE A SPECIFIED SHEAR MODULUS BETWEEN 0.130 KSI AND 0.200 KSI.
3. STEEL LAMINATES SHALL HAVE A MINIMUM YIELD STRENGTH OF 36 KSI. LAMINATES SHALL BE STAINLESS STEEL, MEETING ASTM A240, TYPE 304.
4. POLYTETRAFLUOROETHYLENE (PTFE) SELF-LUBRICATING BEARING ELEMENTS SHALL CONSIST OF 100 PERCENT VIRGIN (UNFILLED) POLYTETRAFLUOROETHYLENE (PTFE) POLYMER.
5. THE SURFACE OF THE STAINLESS STEEL IN CONTACT WITH THE PTFE SHALL HAVE A SURFACE FINISH OF LESS THAN 20 µIN Ra AND SHALL BE MIRROR FINISHED. THE MATERIAL SHALL CONFORM TO ASTM A240 TYPE 304. THE MAXIMUM COEFFICIENT OF FRICTION FOR THE PTFE AND BEARING ASSEMBLY SHALL BE µ=0.08 AT 68°F.
6. EMBEDDED PLATES AND STUDS SHALL BE A709 GRADE 50 STEEL, UNPAINTED AND GALVANIZED IN ACCORDANCE WITH ASTM A123. ALL AREAS WHERE WELDING, CLADDING, OR VULCANIZING IS TO OCCUR SHALL BE MASKED OFF PRIOR TO GALVANIZING. AREAS DAMAGED BY WELDING, CLADDING, OR VULCANIZING SHALL BE TOUCHED UP IN THE FIELD. ALL EDGES SHALL BE CUT OR CAST.
7. THE SURFACE FINISH OF THE MATERIAL/COMPONENT SHALL BE 1000 µIN Ra (AVERAGE ROUGHNESS) ACROSS THE ENTIRE SURFACE, UNLESS OTHERWISE NOTED IN THESE DETAILS OR IN THE CONTRACT SPECIFICATIONS.
8. ALL DOWELS SHALL BE 1 ½" DIAMETER SMOOTH, GALVANIZED RODS.
9. ELASTOMERIC BEARINGS ARE DESIGNED UTILIZING "METHOD A" OF THE AASHTO LRFD BRIDGE DESIGN SPECIFICATIONS.
10. ELASTOMERIC BEARINGS ARE DESIGNED FOR A CONSTRUCTION UNCERTAINTY TOLERANCE IN ACCORDANCE WITH [AASHTO 14.4.2.1]. THE TOLERANCE IS TWO TIMES THE ACTUAL ROTATION, UP TO A MAXIMUM OF 0.005 RAD.
11. EXPANSION BEARINGS ARE DESIGNED TO ALLOW THE FIRST SLIP OF THE BEARING ASSEMBLY, WHERE THE FRICTION FORCE IS COMPUTED AS µ X MAX. DEAD LOAD (µ=0.08).
12. THE MAXIMUM UNFACTORED DESIGN LOAD (DEAD LOAD PLUS LIVE LOAD) WITHOUT DYNAMIC LOAD ALLOWANCE FOR EACH BEARING PAD IS 16.50 KIPS. THIS INFORMATION IS PROVIDED FOR THE PROOF LOAD TEST REQUIREMENTS; SEE SPECIAL PROVISION FOR "PTFE ELASTOMERIC BEARING."
13. ELASTOMERIC BEARINGS SHALL BE PLACED PERPENDICULAR TO THE CENTERLINE OF DECK UNITS.
14. THE ELASTOMERIC BEARINGS SHALL BE INSTALLED WHEN THE AMBIENT AIR AND BEARING TEMPERATURES ARE BETWEEN 40° F AND 85° F AND HAVE BEEN WITHIN THIS RANGE FOR AT LEAST 2 HOURS.
15. THE COST OF FURNISHING AND INSTALLING ELASTOMERIC BEARINGS SHALL BE PAID FOR UNDER THE ITEM "PTFE ELASTOMERIC BEARING."

REV.	DATE	REVISION DESCRIPTION

SIGNATURE BLOCK:
L. PEÑA — DESIGNER/DRAFTER
M. MCCLUSKEY — CHECKED BY:

PRIME AE, 100 GREAT MEADOW ROAD, WETHERSFIELD, CT 06109

CTDOT — CONNECTICUT DEPARTMENT OF TRANSPORTATION

PROJECT TITLE: REPLACEMENT OF BRIDGE NO. 02698 CARRYING ROUTE 149 (EAST HADDAM MOODUS ROAD) OVER DYKAS BROOK

TOWN(S): EAST HADDAM

DRAWING TITLE: BEARING DETAILS - 1

PROJECT NO.: 0040-0148

DRAWING NO.: S-18

SHEET NO.: 04-19

LASTED SAVED BY: lpena **FILE NAME:** c:\pw-wkrdir\primeeng-pw-01\ct-luis pena\dms07112\SB_CP_0040_0148_StrBorder.dgn
PLOTTED DATE: 4/21/2025

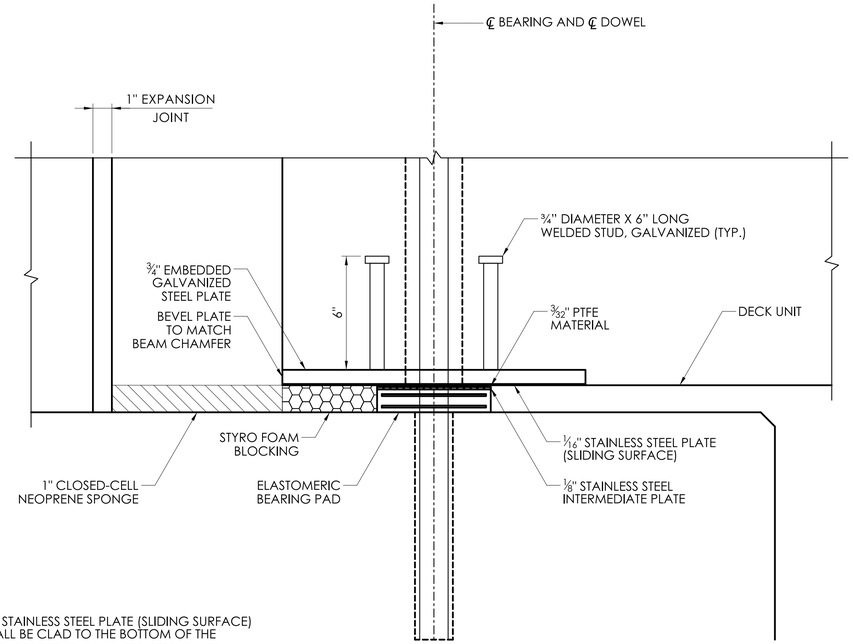

NOTES:

1. 1/16" STAINLESS STEEL PLATE (SLIDING SURFACE) SHALL BE CLAD TO THE BOTTOM OF THE ¾" EMBEDDED GALVANIZED STEEL PLATE.
2. 3/32" PTFE MATERIAL TO BE BONDED TO THE TOP OF THE 1/8" STAINLESS STEEL INTERMEDIATE PLATE.

SIDE VIEW
EXPANSION BEARING
SCALE: 3" =1'-0"

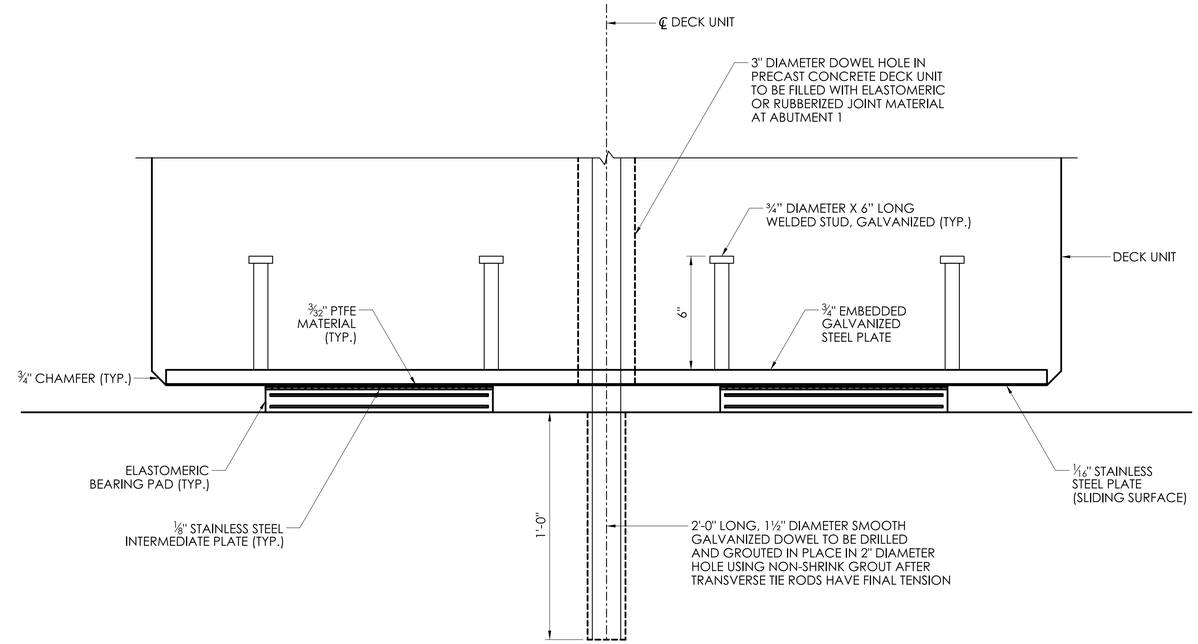

ELEVATION VIEW
EXPANSION BEARING
SCALE: 3" =1'-0"

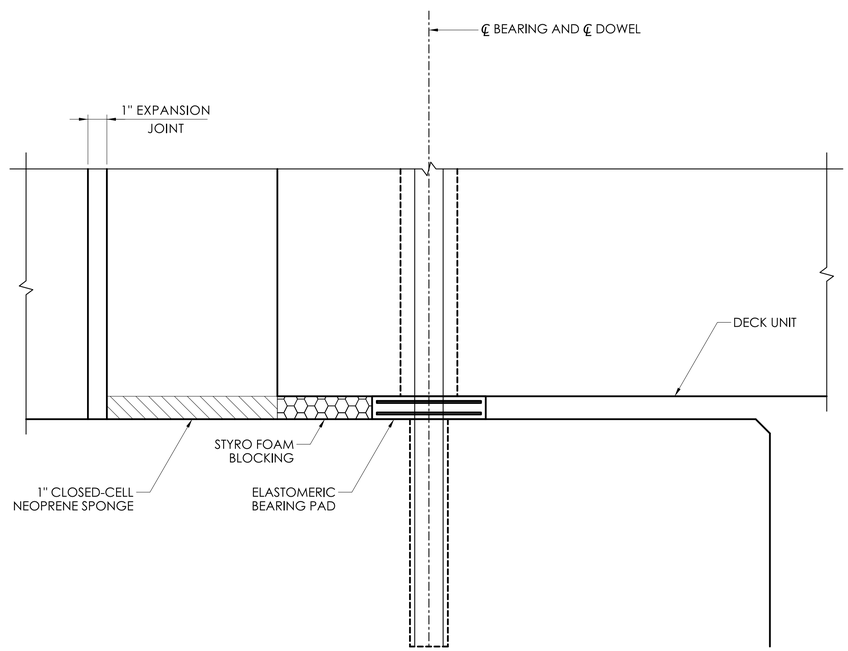

SIDE VIEW
FIXED BEARING
SCALE: 3" =1'-0"

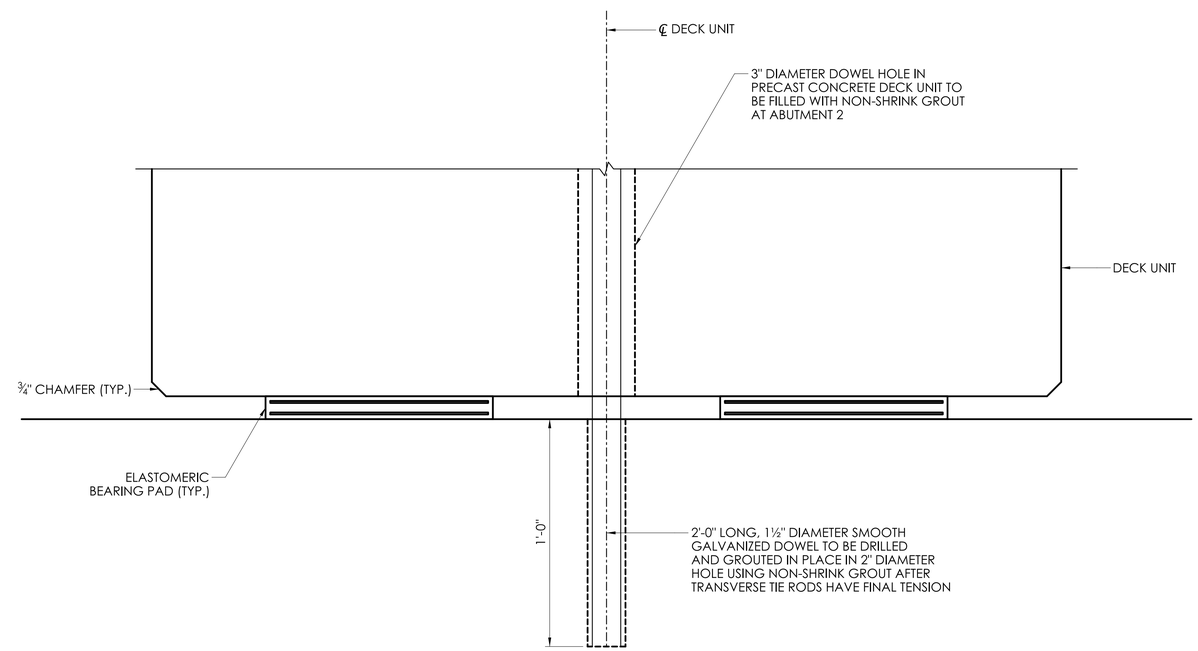

ELEVATION VIEW
FIXED BEARING
SCALE: 3" =1'-0"

REV.	DATE	REVISION DESCRIPTION

SIGNATURE BLOCK:

DESIGNER/DRAFTER:	CHECKED BY:
L. PEÑA	M. MCCLUSKEY

PRIME AE, 100 GREAT MEADOW ROAD, WETHERSFIELD, CT 06109

CTDOT — CONNECTICUT DEPARTMENT OF TRANSPORTATION

PROJECT TITLE: REPLACEMENT OF BRIDGE NO. 02698 CARRYING ROUTE 149 (EAST HADDAM MOODUS ROAD) OVER DYKAS BROOK

TOWN(S): EAST HADDAM

DRAWING TITLE: BEARING DETAILS - 2

PROJECT NO.: 0040-0148

DRAWING NO.: S-19

SHEET NO.: 04-20

LASTED SAVED BY: lpena **FILE NAME:** c:\pw-wkrdir\primeeng-pw-01\ct - luis pena\dms07112\SB_CP_0040_0148_StrBorder.dgn
PLOTTED DATE: 4/21/2025

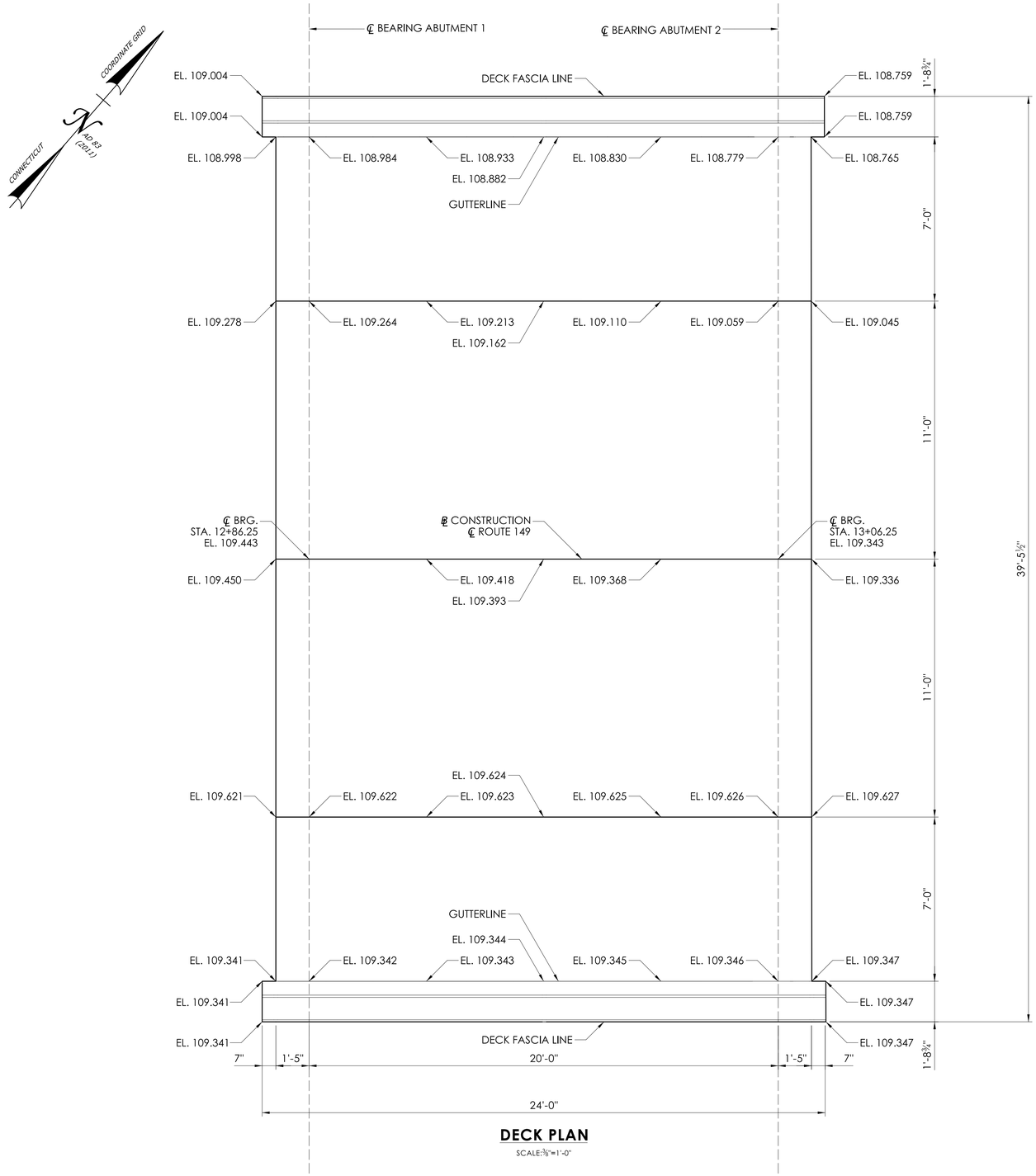

DECK PLAN

SCALE: ⅜"=1'-0"

NOTES

1. ELEVATIONS SHOWN ON THE SLAB PLAN APPLY AT THE TOP OF THE 3" BITUMINOUS CONCRETE WEARING SURFACE.
2. SEE APPROACH SLAB PLAN SHEET FOR APPROACH SLAB DETAILS.

FINISHED GRADE ELEVATIONS AT BEAM ℄

BEAM	ABUT. 1 BRG'S	0.25L	0.5L	0.75L	ABUT. 2 BRG'S
B1	108.984	108.933	108.882	108.830	108.779
B2	109.104	109.053	109.002	108.950	108.899
B3	109.244	109.193	109.142	109.090	109.039
B4	109.321	109.278	109.235	109.192	109.149
B5	109.386	109.352	109.319	109.286	109.253
B6	109.443	109.418	109.393	109.368	109.343
B7	109.500	109.483	109.466	109.450	109.433
B8	109.565	109.558	109.550	109.543	109.536
B9	109.602	109.603	109.604	109.605	109.606
B10	109.462	109.463	109.464	109.465	109.466
B11	109.342	109.343	109.344	109.345	109.346

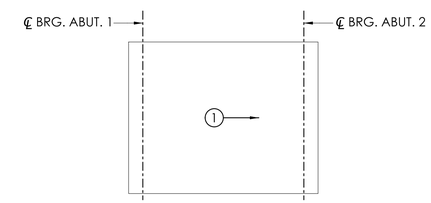

DECK POUR SEQUENCE

NOT TO SCALE

POUR SEQUENCE NOTES

1. (1)→ INDICATES SEQUENCE AND DIRECTION OF POUR.
2. A MINIMUM OF 2,000 PSI STRENGTH SHALL BE ACHIEVED PRIOR TO ANY CONSECUTIVE POURS.
3. ALL CONCRETE IN A GIVEN POUR SHALL BE KEPT IN A FLUID CONDITION UNTIL THE ENTIRE POUR IS COMPLETED.
4. CONCRETE FOR THE DECK SHALL BE POURED IN A UNIFORM MANNER ACROSS THE ENTIRE WIDTH OF THE POUR. STARTING FROM THE LOW END TO THE HIGH END. NO HEAVY CONCENTRATION OF WET CONCRETE SHALL BE ALLOWED.
5. SLAB POURS SHALL FOLLOW THE NUMERICAL SEQUENCE SHOWN. POURING SEQUENCES OTHER THAN THOSE SHOWN ON THE PLANS SHALL BE SUBMITTED BY THE CONTRACTOR FOR REVIEW AND ACCEPTANCE BY THE ENGINEER.

REV.	DATE	REVISION DESCRIPTION

SIGNATURE BLOCK:
L. PEÑA — DESIGNER/DRAFTER:
M. MCCLUSKEY — CHECKED BY:

PRIME AE
100 GREAT MEADOW ROAD
WETHERSFIELD, CT 06109

CTDOT
CONNECTICUT DEPARTMENT OF TRANSPORTATION

PROJECT TITLE:
REPLACEMENT OF BRIDGE NO. 02698 CARRYING ROUTE 149 (EAST HADDAM MOODUS ROAD) OVER DYKAS BROOK

TOWN(S): EAST HADDAM

DRAWING TITLE: DECK PLAN

PROJECT NO.: 0040-0148

DRAWING NO.: S-20

SHEET NO.: 04-21

LASTED SAVED BY: lpena FILE NAME: c:\pw-wkrdir\primeeng-pw-01\ct - luis pena\dms07112\SB_CP_0040_0148_StrBorder.dgn
PLOTTED DATE: 4/21/2025

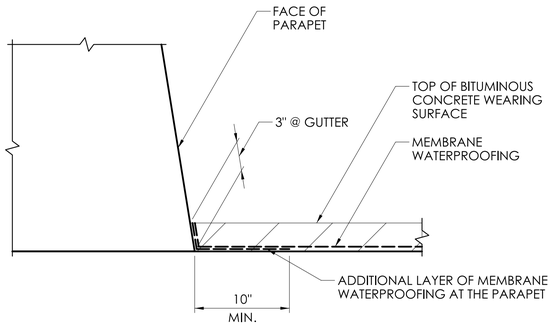

TREATMENT OF MEMBRANE WATERPROOFING AT GUTTER

SCALE: 1½" = 1'-0"

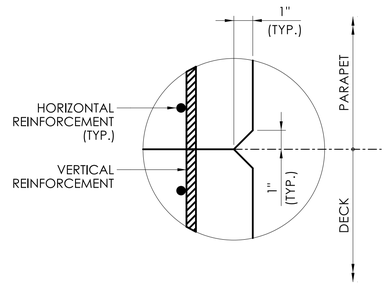

TYPICAL RUSTICATION DETAIL

SCALE: 3" = 1'-0"

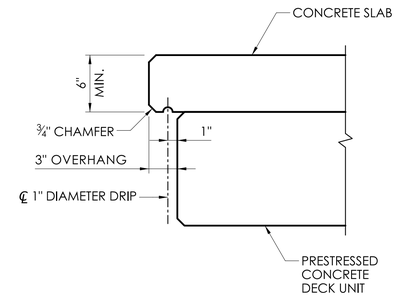

DRIP GROOVE DETAIL

SCALE: 1½" =1'-0"

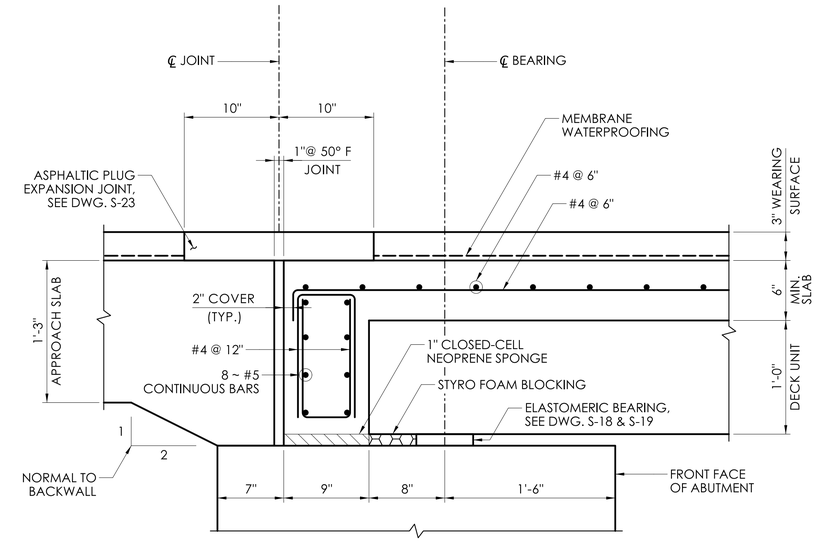

END OF SLAB SECTION

SCALE: 1½" = 1'-0"

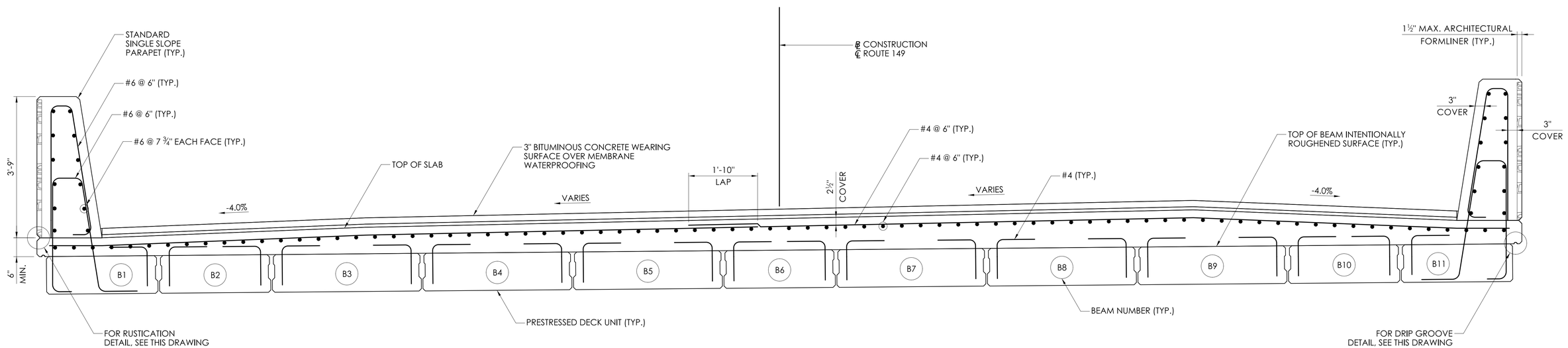

DECK SLAB REINFORCEMENT DETAIL

SCALE: ¾" = 1'-0"

REV.	DATE	REVISION DESCRIPTION

SIGNATURE BLOCK:

L. PEÑA — DESIGNER/DRAFTER:

M. MCCLUSKEY — CHECKED BY:

PRIME AE, 100 GREAT MEADOW ROAD, WETHERSFIELD, CT 06109

CTDOT — CONNECTICUT DEPARTMENT OF TRANSPORTATION

PROJECT TITLE: REPLACEMENT OF BRIDGE NO. 02698 CARRYING ROUTE 149 (EAST HADDAM MOODUS ROAD) OVER DYKAS BROOK

TOWN(S): EAST HADDAM

DRAWING TITLE: DECK DETAILS

PROJECT NO.: 0040-0148

DRAWING NO.: S-21

SHEET NO.: 04-22

LASTED SAVED BY: lpena **FILE NAME:** c:\pw-wkrdir\primeeng-pw-01\ct - luis pena\dms07112\SB_CP_0040_0148_StrBorder.dgn
PLOTTED DATE: 4/21/2025

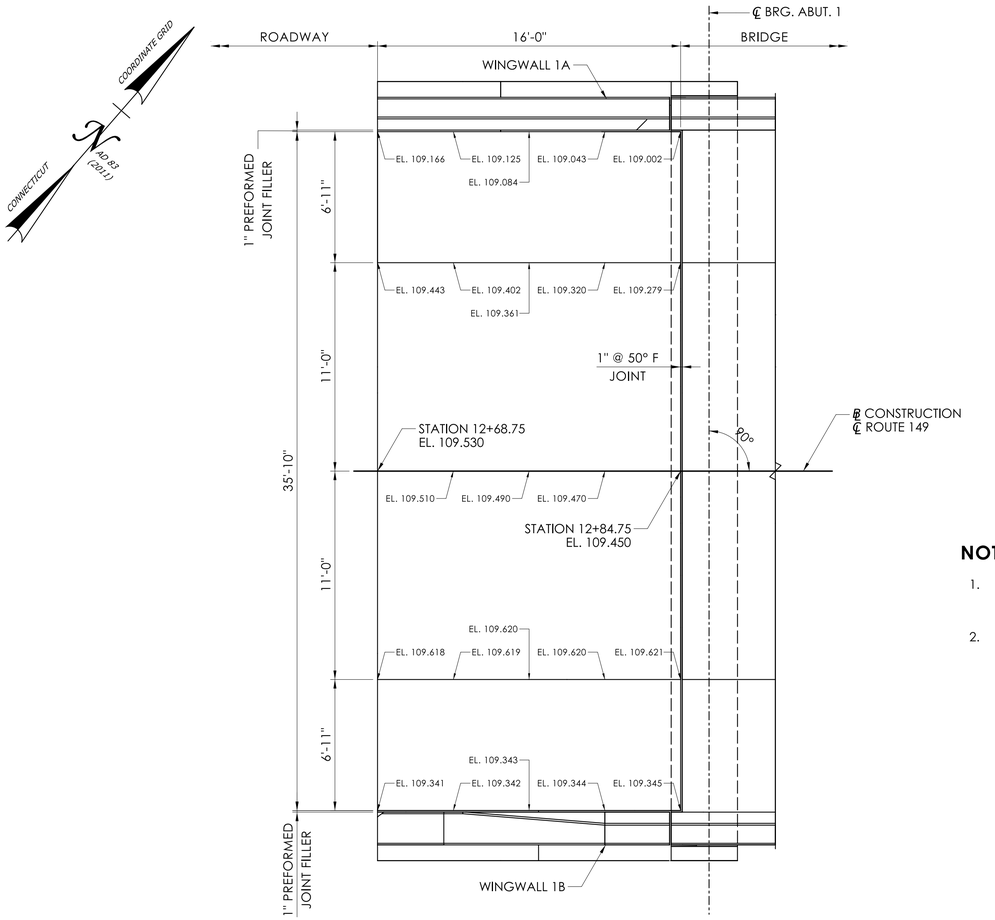

ABUTMENT 1 APPROACH SLAB PLAN

SCALE: 1/4" = 1'-0"

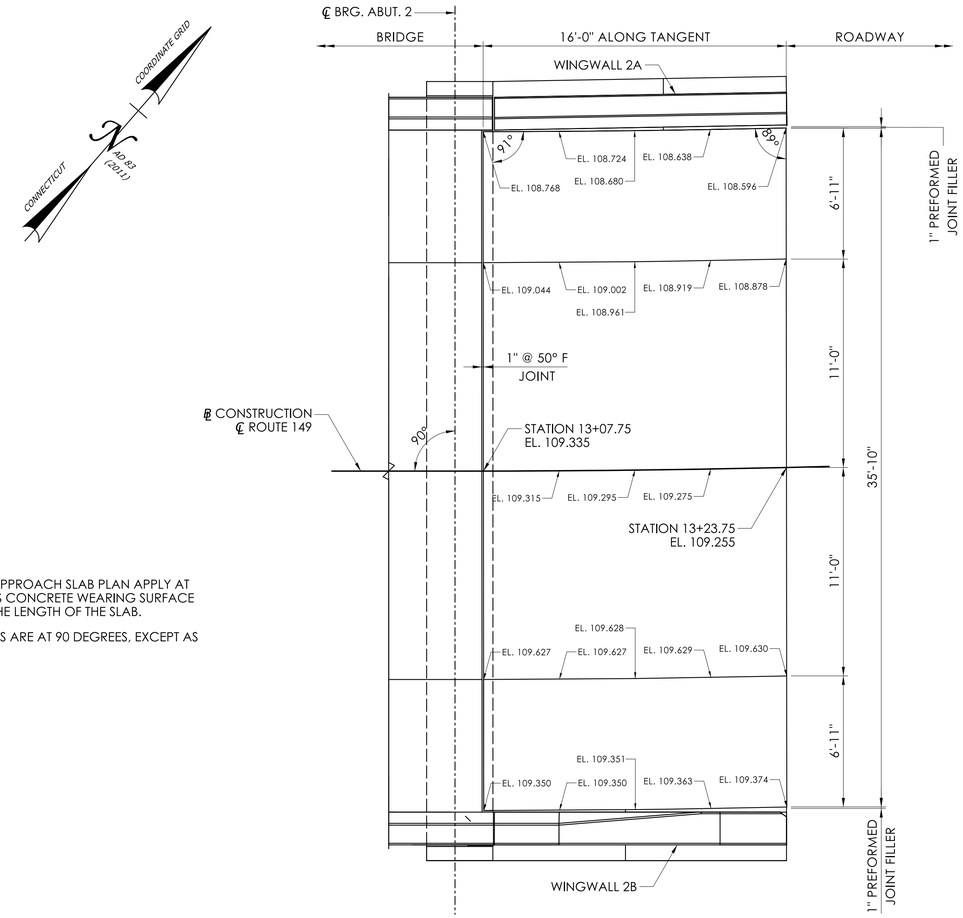

ABUTMENT 2 APPROACH SLAB PLAN

SCALE: 1/4" = 1'-0"

NOTES

1. ELEVATIONS SHOWN ON THE APPROACH SLAB PLAN APPLY AT THE TOP OF THE 3" BITUMINOUS CONCRETE WEARING SURFACE AT QUARTER POINTS ALONG THE LENGTH OF THE SLAB.
2. ALL APPROACH SLAB CORNERS ARE AT 90 DEGREES, EXCEPT AS NOTED.

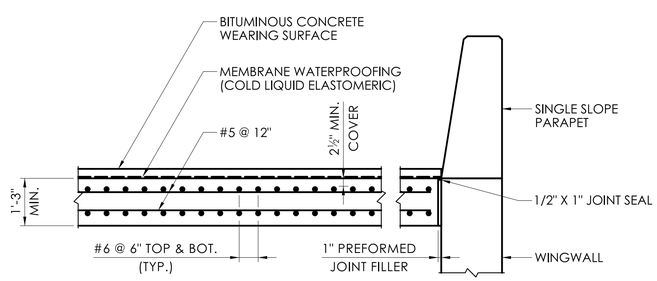

TYPICAL TRANSVERSE SECTION

SCALE: 1/2" = 1'-0"

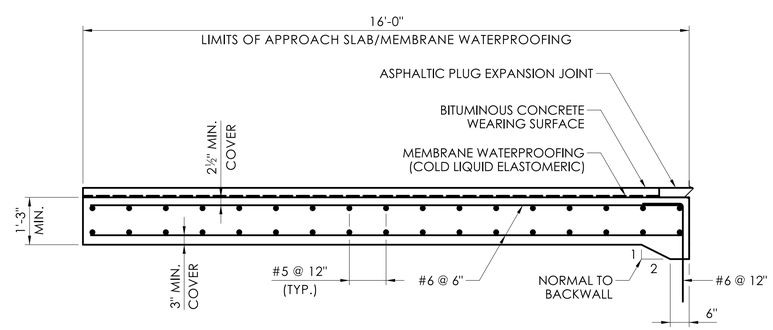

TYPICAL LONGITUDINAL SECTION

SCALE: 1/2" = 1'-0"

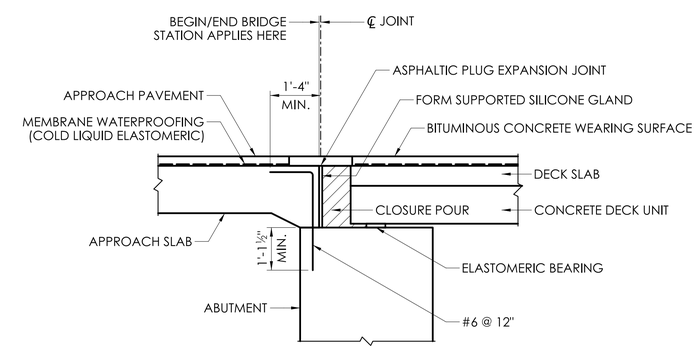

APPROACH SLAB SECTION

SCALE: 1/2" = 1'-0"

REV.	DATE	REVISION DESCRIPTION

SIGNATURE BLOCK: L. PEÑA — M. MCCLUSKEY

DESIGNER/DRAFTER: CHECKED BY:

PRIME AE, 100 GREAT MEADOW ROAD, WETHERSFIELD, CT 06109

CTDOT — CONNECTICUT DEPARTMENT OF TRANSPORTATION

PROJECT TITLE: REPLACEMENT OF BRIDGE NO. 02698 CARRYING ROUTE 149 (EAST HADDAM MOODUS ROAD) OVER DYKAS BROOK

TOWN(S): EAST HADDAM

DRAWING TITLE: APPROACH SLAB PLAN

PROJECT NO.: 0040-0148

DRAWING NO.: S-22

SHEET NO.: 04-23

LASTED SAVED BY: lpena FILE NAME: c:\pw-wkrdir\primeeng-pw-01\ct - luis pena\dms07112\SB_CP_0040_0148_StrBorder.dgn

PLOTTED DATE: 4/21/2025

BITUMINOUS CONCRETE PLACEMENT AT ASPHALTIC PLUG JOINTS (APJ)

1. THE REQUIREMENTS OF THE STANDARD SPECIFICATIONS SHALL BE MET EXCEPT IN LIEU OF DENSITY TESTING, THE METHODS DESCRIBED BELOW SHALL BE FOLLOWED TO ASSURE PROPER COMPACTION.

2. TOP LIFT MUST BE UNIFORM THICKNESS; INTERMEDIATE LIFTS CAN BE PLACED AT 0" TO 3½" COMPACTED.

3. REQUIREMENTS FOR PROPER COMPACTION:

   a. MINIMUM 265° F DELIVERY TEMPERATURE OF MATERIAL. PLACE AND SPREAD MATERIAL BEFORE IT COOLS TO 260° F. MATERIAL BELOW TEMPERATURE REQUIREMENT WILL BE REJECTED.

   b. COMPACT NON-SURFACE LIFTS WITH VIBRATORY PLATE COMPACTOR MEETING THE FOLLOWING REQUIREMENTS:

      i. DESIGNED TO COMPACT ASPHALT
      ii. EQUIPPED WITH A WATER TANK
      iii. CENTRIFUGAL FORCE 3200 LBS TO 6000 LBS
      iv. WEIGHS MINIMUM 160 LBS (WITHOUT WATER)
      v. MINIMUM 4400 VIBRATIONS PER MINUTE

   c. COMPACT TOP LIFT WITH 3 1/2 TO 4 1/2 TON DOUBLE DRUM ROLLER, DESIGNED TO COMPACT BITUMINOUS CONCRETE.

   d. PROVIDE NUMBER OF PASSES BASED ON LIFT THICKNESS AS FOLLOWS:

LIFT THICKNESS (INCHES)	NUMBER OF PASSES
0 TO 1 1/2	8
1 1 /2 TO 2	10
2 TO 3 1/2	12

e. ADDITIONAL COMPACTING EQUIPMENT MAY BE REQUIRED TO COMPLETE LIFT COMPACTION BEFORE MATERIAL COOLS TO 180° F.

f. AT CORNERS OR OTHER AREAS INACCESSIBLE TO PLATE TAMPER, HAND TAMP 20 TIMES MINIMUM BEFORE MATERIAL COOLS TO 180° F.

4. ALTERNATE EQUIPMENT MAY BE REQUESTED AS A SUPPLEMENT TO CONTRACTOR'S QC PLAN. THE EQUIPMENT AND PROCEDURES MUST BE APPROVED BY THE ENGINEER PRIOR TO USE.

5. IF THESE METHODS ARE NOT PERFORMED TO THE SATISFACTION OF THE ENGINEER, DENSITY VERIFICATION MAY BE REQUIRED WHEREIN THE CONTRACTOR SHALL PROVIDE DENSITY TESTING WITH A QC NUCLEAR DENSITY GAUGE OR COLLECT CORE SAMPLES AS SPECIFIED IN SECTION 4.06.

ASPHALTIC PLUG EXPANSION JOINT SYSTEM NOTES

1. A BRIDGING PLATE SHALL BE USED TO SPAN THE GAP BETWEEN TWO DECK ENDS OR THE JOINT BETWEEN A DECK END AND A CONCRETE APPROACH SLAB.

2. DISCONTINUE THE INSTALLATION OF THE BRIDGING PLATE WHERE THE APPROACH SLAB IS DISCONTINUED (TYPICALLY IN THE ROADWAY SHOULDERS). SEE "ASPHALTIC PLUG EXPANSION JOINT SYSTEM" SPECIAL PROVISION.

3. NEW STEEL BRIDGING PLATES SHALL BE A MINIMUM OF ¼" THICK BY 8" WIDE. FOR JOINT OPENINGS WHICH EXCEED 3", A ⅜" THICK BY 12" WIDE PLATE WILL BE REQUIRED

4. NO BRIDGING PLATE SHALL BE USED AT THE FOLLOWING LOCATIONS:
   A. JOINT BETWEEN A DECK END AND A CONCRETE APPROACH PAVEMENT
   B. WHERE A BRIDGE DECK END MEETS A BITUMINOUS APPROACH PAVEMENT

5. THE REMOVAL OF ALL EXISTING JOINT SYSTEMS, BITUMINOUS CONCRETE OVERLAY, MEMBRANE WATERPROOFING AND BOND BREAKER WITHIN THE LIMITS SHOWN TO BE INCLUDED FOR PAYMENT UNDER THE ITEM "REMOVAL OF EXISTING WEARING SURFACE."

6. TEMPORARY CLOSED CELL BACKER ROD DIAMETER SHALL BE DETERMINED AFTER MEASURING THE JOINT OPENING, THE ROD SHALL BE 25% LARGER THAN THE JOINT OPENING.

7. INSTALLATION OF MEMBRANE WITHIN THE LIMITS SHOWN TO BE PAID UNDER THE ITEM, "MEMBRANE WATERPROOFING (COLD LIQUID ELASTOMERIC)."

8. THE FURNISHING AND PLACING OF HMA S0.25 AND HMA S0.5 WILL BE INCLUDED FOR PAYMENT UNDER THE ITEMS "HMA S0.25" AND "HMA S0.5," RESPECTIVELY.

9. SAW-CUTTING AND REMOVAL OF PAVEMENT FOR JOINT INSTALLATION TO BE INCLUDED FOR PAYMENT UNDER THE ITEM "ASPHALTIC PLUG EXPANSION JOINT SYSTEM."

10. INSTALLATION OF FOAM SUPPORTED SILICONE GLAND TO BE PAID UNDER THE ITEM "ASPHALTIC PLUG EXPANSION JOINT SYSTEM."

11. ASPHALTIC PLUG EXPANSION JOINT SYSTEMS MAY BE INSTALLED ONLY WITHIN THE TEMPERATURE RANGE SPECIFIED IN THE SPECIAL PROVISION "ASPHALTIC PLUG EXPANSION JOINT SYSTEM". REFERENCE THE RANGE OF THERMAL MOVEMENT FOR THE SELECTED JOINT PRODUCT IN THE TABLE FOR "INSTALLATION RESTRICTIONS" IN THE SPECIAL PROVISION.

12. EXPLORATION OF PAVEMENT THICKNESS AND JOINT LOCATION TO BE INCLUDED IN THE GENERAL COST OF THE ITEM "REMOVAL OF EXISTING WEARING SURFACE".

13. CONTRACTOR SHALL NOTIFY THE DEPARTMENT IF THE EXISTING PAVEMENT IS DETERMINED TO BE LESS THAN 2" OR GREATER THAN 6" WITHIN THE BRIDGE LIMITS.

14. FOAM SUPPORTED SILICONE GLAND SHALL BE INCLUDED FOR PAYMENT UNDER ITEM "ASPHALTIC PLUG EXPANSION JOINT SYSTEM."

JOINT WORK FOR BRIDGES

1. ALL WORK TO REMOVE BITUMINOUS CONCRETE OVERLAY, MEMBRANE WATERPROOFING, EXISTING JOINT COMPONENTS AND SEALING ELEMENTS, SHALL BE INCLUDED IN THE COST OF "REMOVAL OF EXISTING WEARING SURFACE".

2. WHERE EXISTING BRIDGE DECK JOINTS ARE CONCEALED BENEATH BITUMINOUS CONCRETE OVERLAY THE CONTRACTOR SHALL VERIFY THE BRIDGE DECK JOINT LOCATION AND SUBMIT THE LIMITS OF SAW-CUTTING FOR THE ENGINEERS APPROVAL.

3. THE FURNISHING AND PLACING OF TEMPORARY PAVEMENT IN THE JOINT CUT-OUT SHALL CONFORM TO "BITUMINOUS CONCRETE PLACEMENT PLACEMENT AT ASPHALTIC PLUG JOINTS (APJ)" AND SHALL BE INCLUDED FOR PAYMENT UNDER THE ITEM "HMA S0.25," "HMA S0.5," OR AS DIRECTED BY THE ENGINEER.

4. MEMBRANE WATERPROOFING SHALL BE "MEMBRANE WATERPROOFING (COLD LIQUID ELASTOMERIC)" AND SHALL BE PLACED PRIOR TO PLACEMENT OF PAVEMENT OVERLAY.

5. ROUGH OR DAMAGED CONCRETE DECK SURFACES SHALL BE REPAIRED WITH A CONCRETE LEVELING MATERIAL INCLUDED FOR PAYMENT UNDER THE ITEM "ASPHALTIC PLUG EXPANSION JOINT SYSTEM".

6. THE DEPTH OF PROPOSED ASPHALTIC PLUG JOINT IS ESTIMATED TO BE 4" AVERAGE.

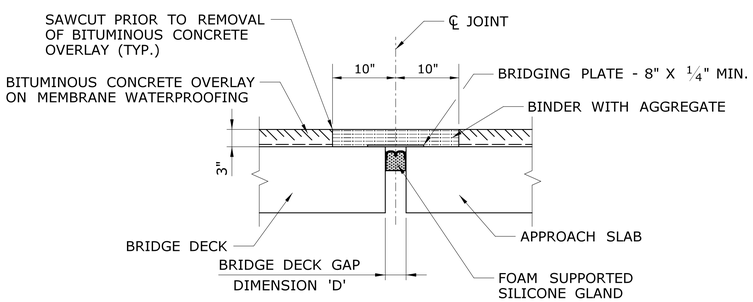

TYPICAL SECTION
ASPHALTIC PLUG EXPANSION JOINT SYSTEM
NOT TO SCALE

DIMENSION 'D' FOR VARIOUS INSTALLATION TEMPERATURES													
TEMPERATURE	-10° F	0° F	10° F	20° F	30° F	40° F	50° F	60° F	70° F	80° F	90° F	100° F	110° F
DIMENSION 'D' (IN)	1.09	1.08	1.06	1.05	1.03	1.02	1.00	0.99	0.97	0.96	0.94	0.93	0.91

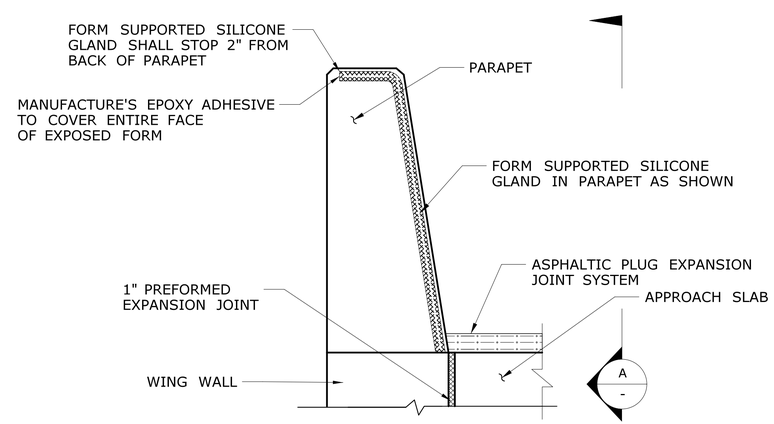

SINGLE SLOPE

JOINT TREATMENT AT PARAPET
SCALE: ¾" = 1'-0"

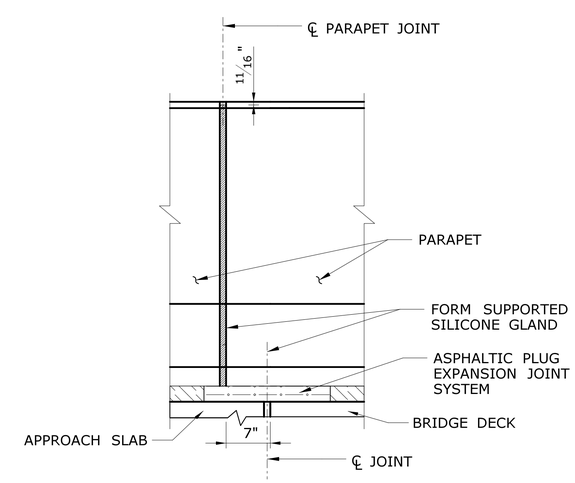

VIEW A -
SCALE: ¾" = 1'-0"

REV.	DATE	REVISION DESCRIPTION

SIGNATURE BLOCK:
L. PEÑA — DESIGNER/DRAFTER
M. MCCLUSKEY — CHECKED BY:

PRIME AE, 100 GREAT MEADOW ROAD, WETHERSFIELD, CT 06109

CTDOT — CONNECTICUT DEPARTMENT OF TRANSPORTATION

PROJECT TITLE: REPLACEMENT OF BRIDGE NO. 02698 CARRYING ROUTE 149 (EAST HADDAM MOODUS ROAD) OVER DYKAS BROOK

TOWN(S): EAST HADDAM

DRAWING TITLE: ASPHALTIC PLUG EXPANSION JOINT NOTES AND DETAILS - 1

PROJECT NO.: 0040-0148

DRAWING NO.: S-23

SHEET NO.: 04-24

LASTED SAVED BY: lpena FILE NAME: c:\pw-wkrdir\primeeng-pw-01\c1 - luis pena\dms07112\SB_CP_0040_0148_StrBorder.dgn
PLOTTED DATE: 4/21/2025

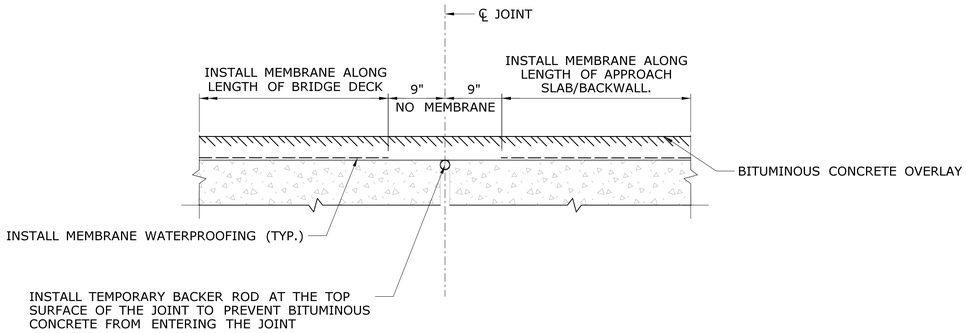

PLACEMENT OF PAVEMENT ALONG THE BRIDGE

N.T.S.

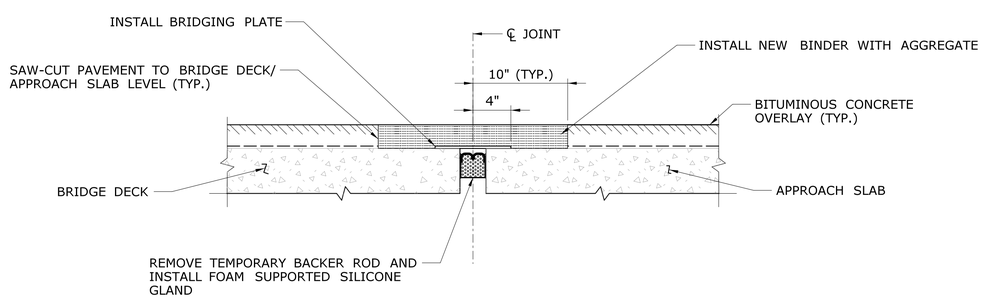

INSTALL ASPHALTIC PLUG EXPANSION JOINT

N.T.S.

INSTALLATION OF ASPHALTIC PLUG JOINT WITH BRIDGING PLATE

N.T.S.

SUGGESTED SEQUENCE OF WORK

STEP 1: INSTALL TEMPORARY BACKER ROD FLUSH WITH THE BRIDGE DECK AND APPROACH SLAB OR BACKWALL.

STEP 2: INSTALL MEMBRANE WATERPROOFING TO THE TOP OF DECK AND APPROACH SLAB WITHIN THE LIMITS SHOWN.

STEP 3: PLACE BITUMINOUS CONCRETE OVERLAY AS INDICATED ON THE PLANS.

STEP 4: SAW-CUT PAVEMENT FULL DEPTH AT 10" EACH SIDE OF CENTERLINE OF JOINT, AND REMOVE ALL PAVEMENT MATERIAL BETWEEN SAW-CUTS. TO BE PAID FOR UNDER THE ITEM "ASPHALTIC PLUG EXPANSION JOINT SYSTEM".

STEP 5: INSTALL PROPOSED ASPHALTIC PLUG EXPANSION JOINT SYSTEM WITH FOAM SUPPORTED SILICONE GLAND AND BRIDGING PLATE. LOCATING PINS SHALL NOT BE USED TO SECURE THE BRIDGING PLATE.

STEP 6: INSTALL CRACK SEAL AT CURB LINE ALONG THE LENGTH OF THE BRIDGE, BOTH SIDES. CRACK SEALING SHALL BE INCLUDED FOR PAYMENT UNDER ITEM "GUTTER LINE SEALING FOR BRIDGES."

REV.	DATE	REVISION DESCRIPTION

SIGNATURE BLOCK:

L. PEÑA — DESIGNER/DRAFTER:

M. MCCLUSKEY — CHECKED BY:

PRIME AE, 100 GREAT MEADOW ROAD, WETHERSFIELD, CT 06109

CTDOT — CONNECTICUT DEPARTMENT OF TRANSPORTATION

PROJECT TITLE: REPLACEMENT OF BRIDGE NO. 02698 CARRYING ROUTE 149 (EAST HADDAM MOODUS ROAD) OVER DYKAS BROOK

TOWN(S): EAST HADDAM

DRAWING TITLE: ASPHALTIC PLUG EXPANSION JOINT NOTES AND DETAILS - 2

PROJECT NO.: 0040-0148

DRAWING NO.: S-24

SHEET NO.: 04-25

LASTED SAVED BY: lpena FILE NAME: c:\pw-wkrdir\primeeng-pw-01\ct - luis pena\dms07112\SB_CP_0040_0148_StrBorder.dgn

PLOTTED DATE: 4/21/2025

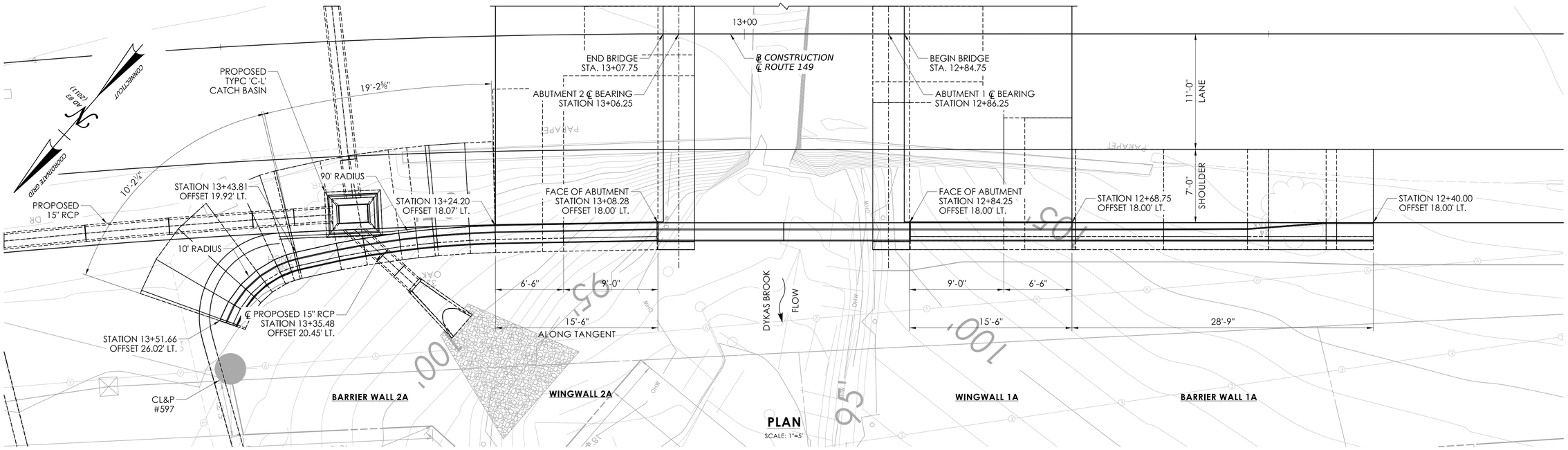

PLAN

SCALE: 1"=5'

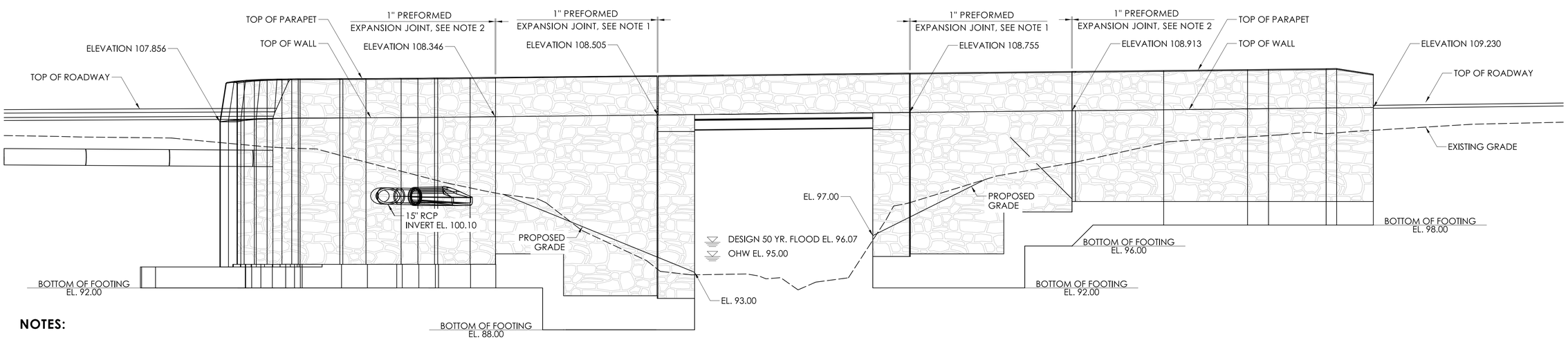

OUTLET ELEVATION

SCALE: 1"=5'

NOTES:

1. INSTALL 1" PREFORMED EXPANSION JOINT FILLER BETWEEN THE WINGWALL AND THE ABUTMENT, FROM THE TOP OF THE WALL TO THE TOP OF THE FOOTING.
2. INSTALL 1" PREFORMED EXPANSION JOINT FROM THE TOP OF THE PARAPET TO THE TOP OF THE FOOTING.
3. REFER TO THE HIGHWAY PLANS FOR THE CATCH BASIN AND RCP DETAILS.

REV.	DATE	REVISION DESCRIPTION

SIGNATURE BLOCK:			PROJECT TITLE:	TOWN(S):	DRAWING TITLE:	PROJECT NO.:	DRAWING NO.:
L. PEÑA	M. MCCLUSKEY	PRIME AE, 100 GREAT MEADOW ROAD, WETHERSFIELD, CT 06109 — CTDOT CONNECTICUT DEPARTMENT OF TRANSPORTATION	REPLACEMENT OF BRIDGE NO. 02698 CARRYING ROUTE 149 (EAST HADDAM MOODUS ROAD) OVER DYKAS BROOK	EAST HADDAM	WALLS PLAN AND ELEVATION - 1	0040-0148	S-25
DESIGNER/DRAFTER:	CHECKED BY:						SHEET NO.: 04-26

LASTED SAVED BY: lpena **FILE NAME:** c:\pw-wkrdir\primeeng-pw-01\ct - luis pena\dms07112\SB_CP_0040_0148_StrBorder.dgn
PLOTTED DATE: 4/21/2025

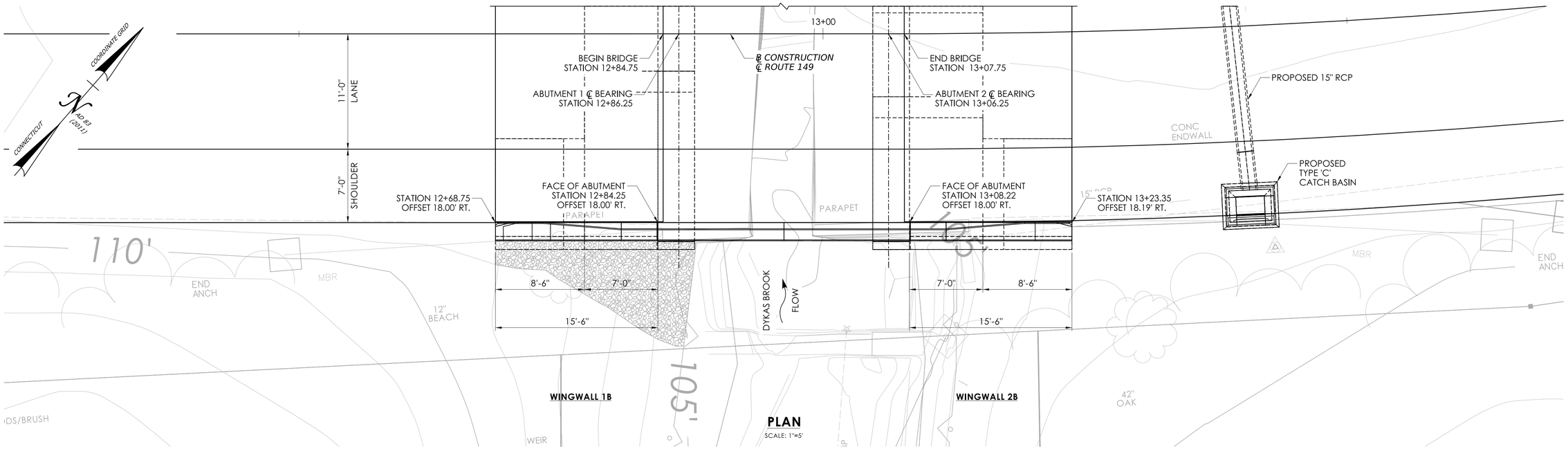

PLAN

SCALE: 1"=5'

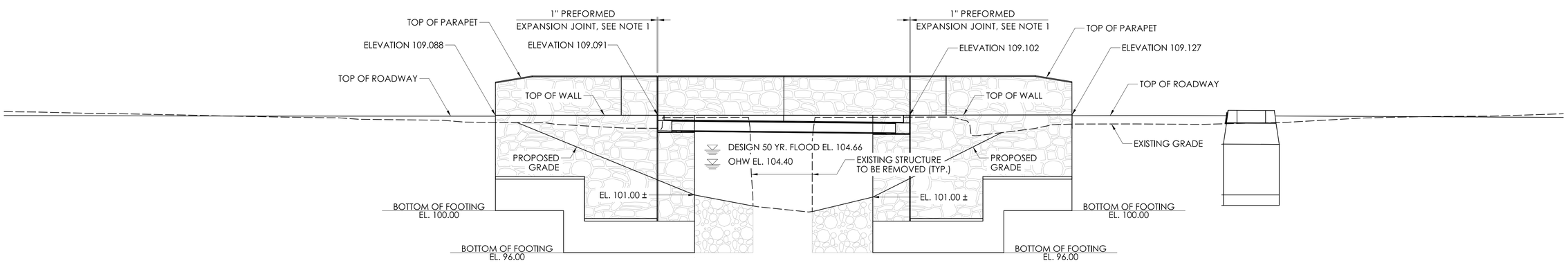

WINGWALL 1B **WINGWALL 2B**

INLET ELEVATION

SCALE: 1"=5'

NOTES:

1. INSTALL 1" PREFORMED EXPANSION JOINT FILLER BETWEEN THE WINGWALL AND THE ABUTMENT, FROM THE TOP OF THE WALL TO THE TOP OF THE FOOTING.

REV.	DATE	REVISION DESCRIPTION

SIGNATURE BLOCK:

L. PEÑA — DESIGNER/DRAFTER:

M. MCCLUSKEY — CHECKED BY:

PRIME AE, 100 GREAT MEADOW ROAD, WETHERSFIELD, CT 06109

CTDOT — CONNECTICUT DEPARTMENT OF TRANSPORTATION

PROJECT TITLE: REPLACEMENT OF BRIDGE NO. 02698 CARRYING ROUTE 149 (EAST HADDAM MOODUS ROAD) OVER DYKAS BROOK

TOWN(S): EAST HADDAM

DRAWING TITLE: WALLS PLAN AND ELEVATION - 2

PROJECT NO.: 0040-0148

DRAWING NO.: S-26

SHEET NO.: 04-27

LASTED SAVED BY: lpena FILE NAME: c:\pw-wkrdir\primeeng-pw-01\c1-luis pena\dms07112\SB_CP_0040_0148_StrBorder.dgn

PLOTTED DATE: 4/21/2025

WALL DATA TABLE

WALL IDENTIFICATION	DIMENSIONS					REINFORCING BARS			
	FOOTING WIDTH	HEEL WIDTH	STEM * HEIGHT	LAP LENGTH OF MAIN STEM BAR	FOOTING THICKNESS	BOTTOM FOOTING BAR	TOP FOOTING BAR	REAR DOWEL BAR	MAIN STEM BAR
WINGWALL 1A	12'-6¾"	10'-0"	VARIES	3'-8"	3'-0"	#6 @ 12"	#6 @ 6"	#8 @ 6"	#8 @ 6"
WINGWALL 1B	10'-6¾"	8'-0"	VARIES	3'-2"	3'-0"	#6 @ 12"	#6 @ 6"	#7 @ 6"	#7 @ 6"
WINGWALL 2A	15'-6¾"	13'-0"	VARIES	5'-7"	3'-0"	#6 @ 12"	#8 @ 6"	#10 @ 6"	#10 @ 6"
WINGWALL 2B	10'-6¾"	8'-0"	VARIES	3'-2"	3'-0"	#6 @ 12"	#6 @ 6"	#7 @ 6"	#7 @ 6"
BARRIER WALL 1A	9'-6¾"	7'-0"	VARIES	2'-4"	2'-0"	#5 @ 12"	#6 @ 6"	#5 @ 6"	#5 @ 6"
BARRIER WALL 2A	10'-6¾"	8'-0"	VARIES	3'-2"	2'-0"	#5 @ 12"	#6 @ 6"	#7 @ 6"	#7 @ 6"

* STEM HEIGHT VARIES; SEE WALL PLAN AND ELEVATION SHEETS.

MAXIMUM DESIGN BEARING PRESSURES

WALL IDENTIFICATION	SERVICE I LIMIT STATE	STRENGTH I LIMIT STATE
WINGWALL 1A	3.84 KSF	5.48 KSF
WINGWALL 1B	2.87 KSF	4.09 KSF
WINGWALL 2A	4.59 KSF	6.53 KSF
WINGWALL 2B	2.78 KSF	3.94 KSF
BARRIER WALL 1A	2.53 KSF	3.55 KSF
BARRIER WALL 2A	4.01 KSF	5.73 KSF

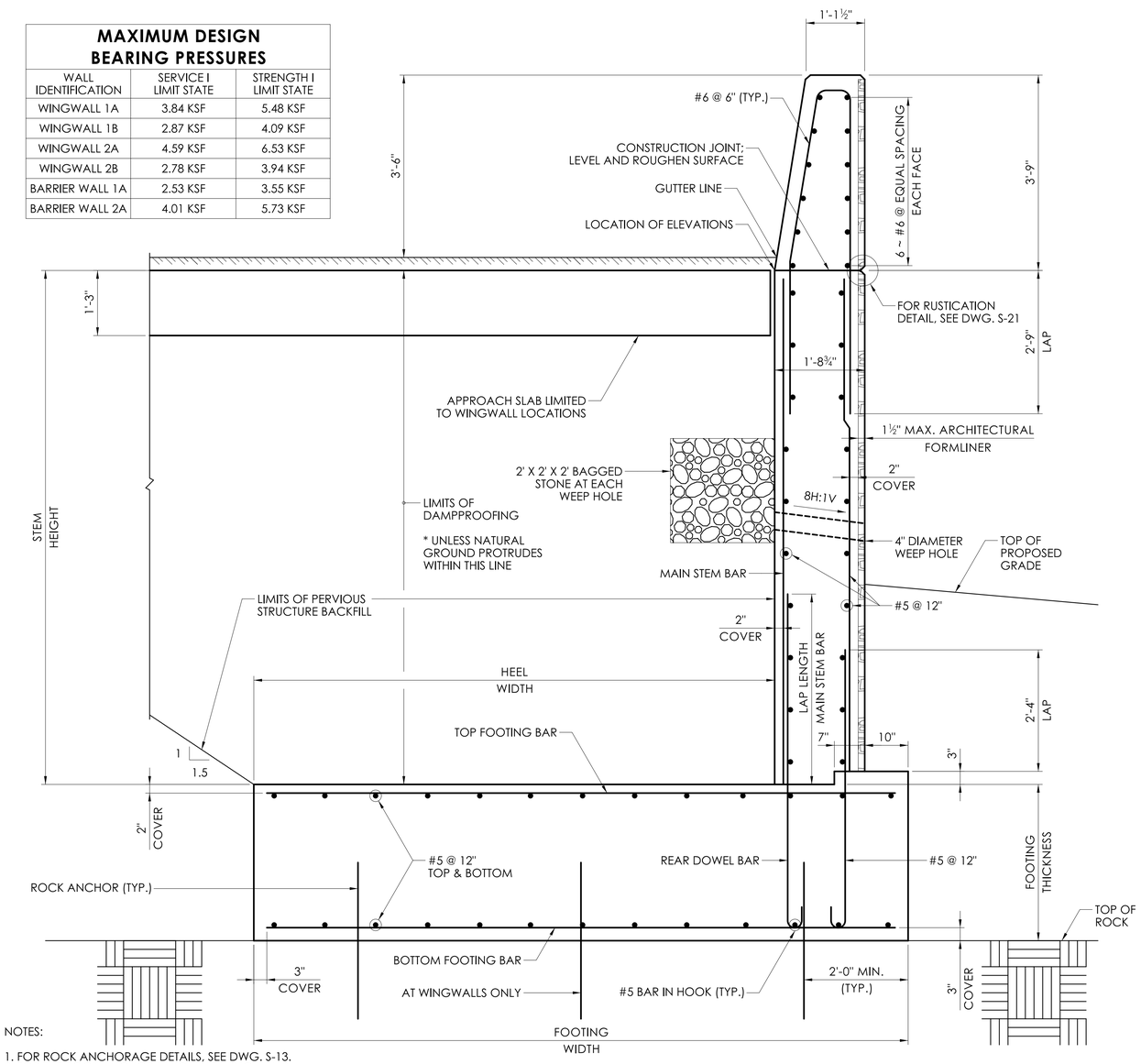

NOTES:

1. FOR ROCK ANCHORAGE DETAILS, SEE DWG. S-13.
2. FOR THE ROCK ANCHOR LAYOUT AT WINGWALLS, SEE DWGS. S-11 AND S-12.
3. FOR BARRIER WALLS 2A AND 1A, EVENLY DISTRIBUTE 10 ANCHORS IN TWO ROWS AND 6 ANCHORS IN TWO ROWS, RESPECTIVELY.

TYPICAL WALL SECTION

SCALE: ¾"=1'-0"

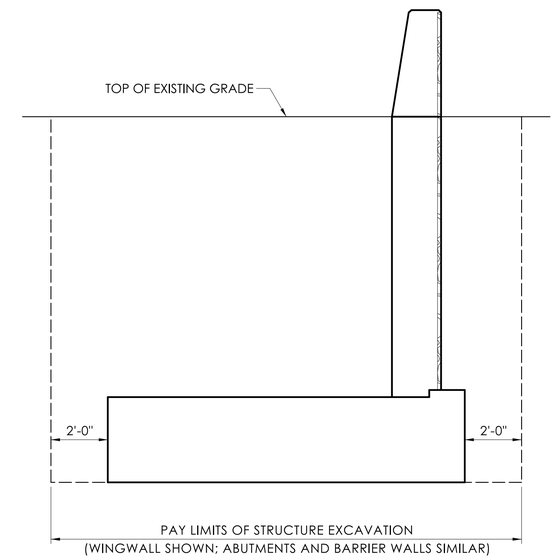

STRUCTURE EXCAVATION DETAIL

SCALE: NOT TO SCALE

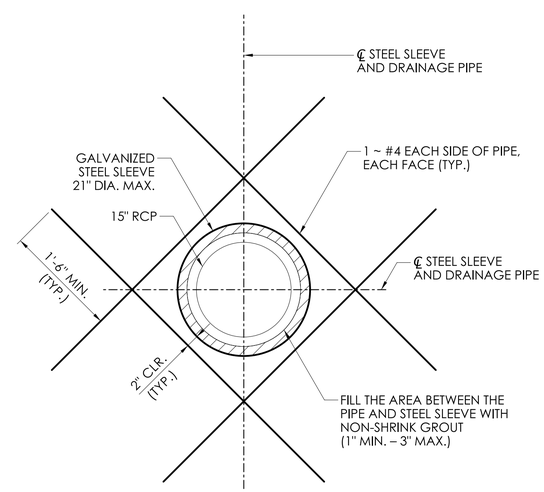

DRAINAGE PIPE OUTLET REINFORCEMENT DETAIL

SCALE: NOT TO SCALE

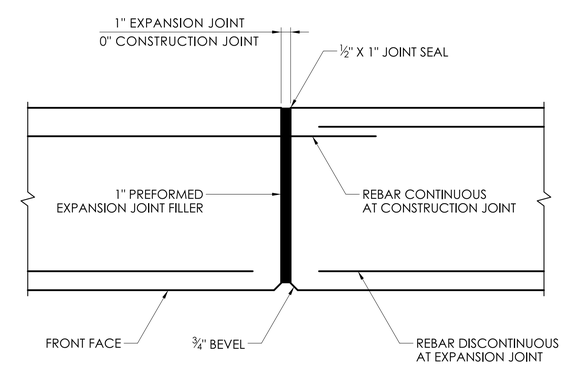

EXPANSION/CONSTRUCTION JOINT DETAIL

SCALE: ½" = 1'-0"

STEEL SLEEVE NOTE:

1. THE COST OF INSTALLING GALVANIZED STEEL SLEEVES FOR DRAINAGE OUTLETS SHALL BE INCLUDED IN THE ITEM "BARRIER WALL CONCRETE".

REVISION DESCRIPTION | DATE | REV.

SIGNATURE BLOCK:
L. PEÑA — DESIGNER/DRAFTER:
M. MCCLUSKEY — CHECKED BY:

PRIME AE, 100 GREAT MEADOW ROAD, WETHERSFIELD, CT 06109

CTDOT — CONNECTICUT DEPARTMENT OF TRANSPORTATION

PROJECT TITLE: REPLACEMENT OF BRIDGE NO. 02698 CARRYING ROUTE 149 (EAST HADDAM MOODUS ROAD) OVER DYKAS BROOK

TOWN(S): EAST HADDAM

DRAWING TITLE: TYPICAL WALL DETAILS

PROJECT NO.: 0040-0148

DRAWING NO.: S-27

SHEET NO.: 04-28

LASTED SAVED BY: lpena FILE NAME: c:\pw-wkrdir\primeeng-pw-01\ct - luis pena\dms07112\SB_CP_0040_0148_StrBorder.dgn
PLOTTED DATE: 4/21/2025

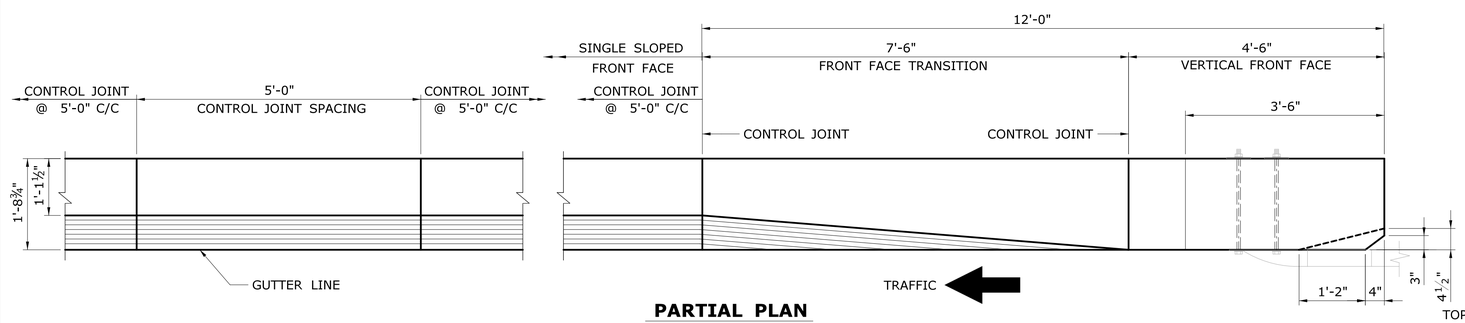

PARTIAL PLAN

SCALE: ¾" = 1'-0"

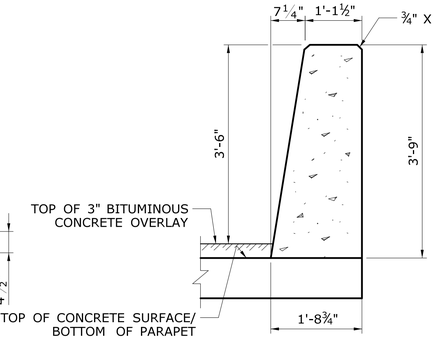

SECTION - SINGLE SLOPE PARAPET (A)

SCALE: ¾" = 1'-0"

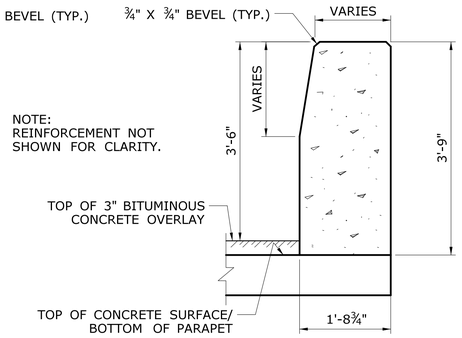

NOTE:
REINFORCEMENT NOT
SHOWN FOR CLARITY.

SECTION - PARAPET TRANSITION (B)

SCALE: ¾" = 1'-0"

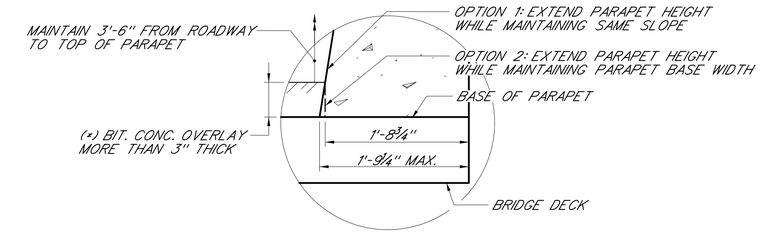

PARAPET MODIFICATION DETAIL FOR
OVERLAY MORE THAN 3"
SCALE: N.T.S.

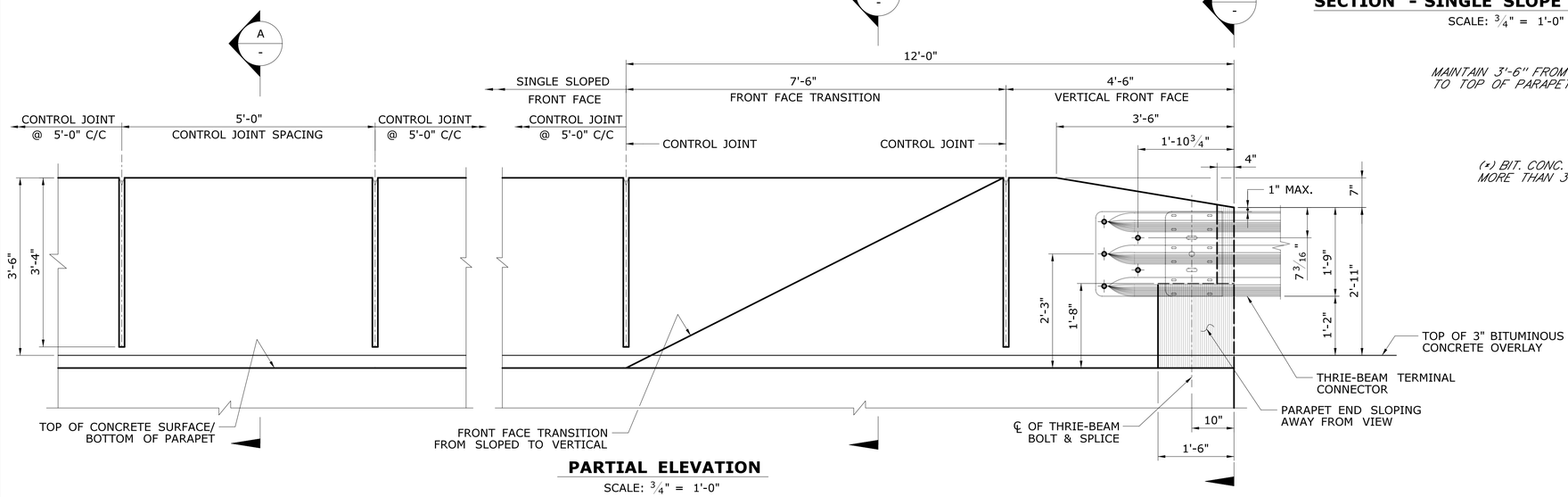

PARTIAL ELEVATION

SCALE: ¾" = 1'-0"

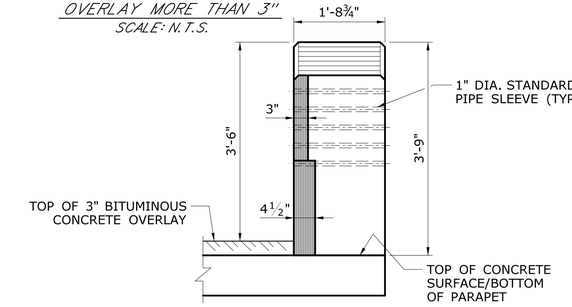

SECTION - END VIEW (C)

SCALE: ¾" = 1'-0"

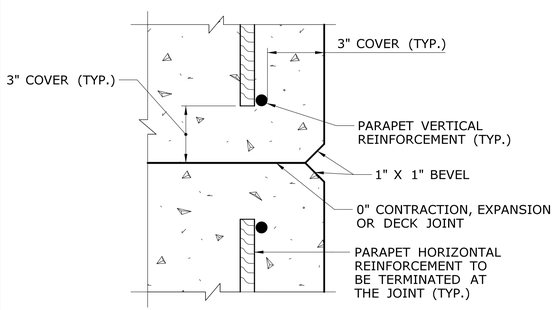

PLAN SECTION - PARAPET JOINT DETAIL

SCALE: N.T.S.

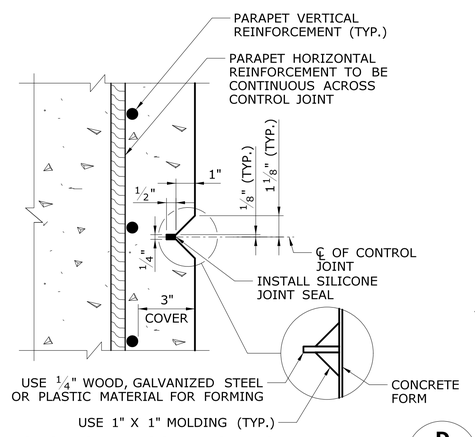

PLAN SECTION - CONTROL JOINT DETAIL (D)

SCALE: N.T.S.

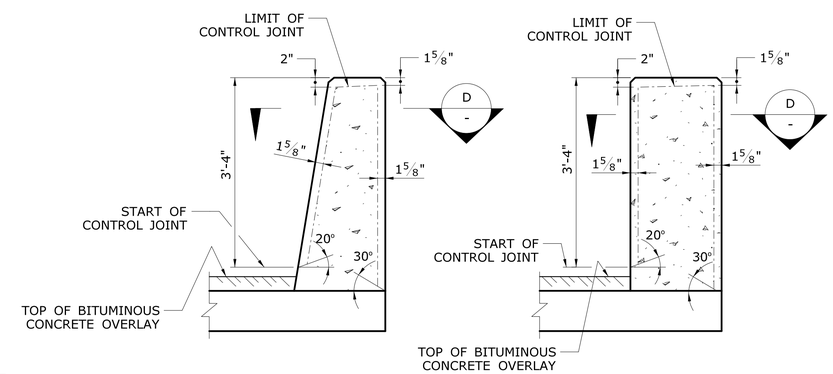

TYPICAL SLOPED FACE

TYPICAL VERTICAL FACE

SECTION - PARAPET CONTROL JOINT DETAIL

SCALE: ¾" = 1'-0"

REV.	DATE	REVISION DESCRIPTION

SIGNATURE BLOCK:
L. PEÑA — M. MCCLUSKEY
DESIGNER/DRAFTER: — CHECKED BY:

PRIME AE — 100 GREAT MEADOW ROAD, WETHERSFIELD, CT 06109

CTDOT — CONNECTICUT DEPARTMENT OF TRANSPORTATION

PROJECT TITLE: REPLACEMENT OF BRIDGE NO. 02698 CARRYING ROUTE 149 (EAST HADDAM MOODUS ROAD) OVER DYKAS BROOK

TOWN(S): EAST HADDAM

DRAWING TITLE: SINGLE SLOPE PARAPET DETAILS

PROJECT NO.: 0040-0148

DRAWING NO.: S-28

SHEET NO.: 04-29

LASTED SAVED BY: lpena FILE NAME: c:\pw-wkrdir\primeeng-pw-01\ct - luis pena\dms07112\SB_CP_0040_0148_StrBorder.dgn
PLOTTED DATE: 4/21/2025

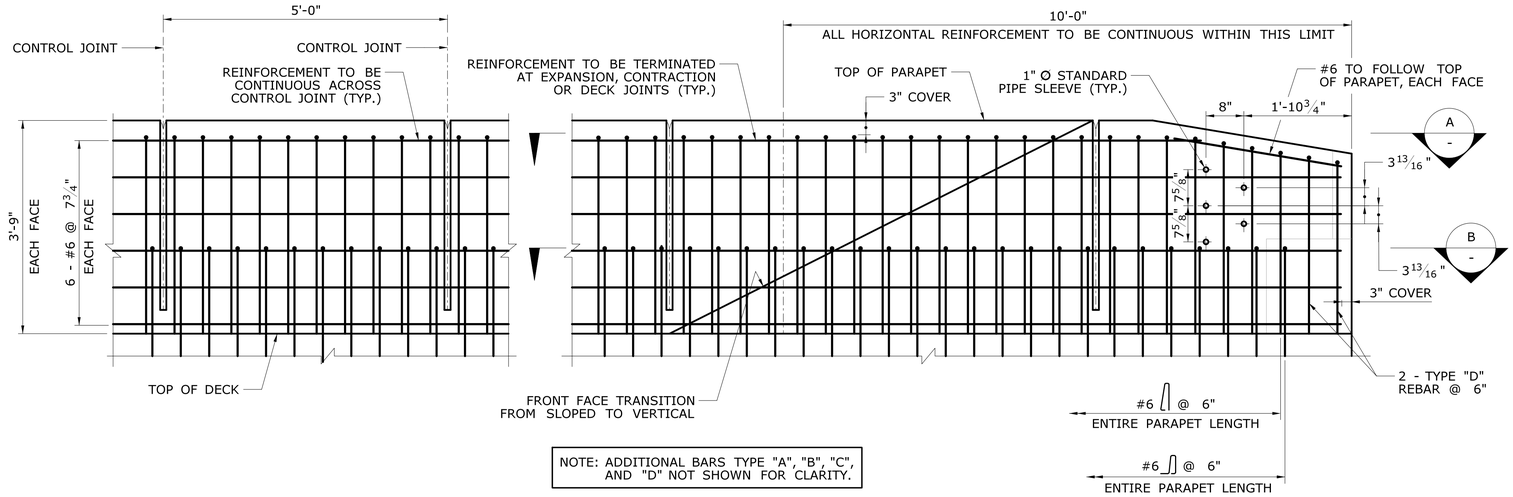

NOTE: ADDITIONAL BARS TYPE "A", "B", "C", AND "D" NOT SHOWN FOR CLARITY.

PARTIAL ELEVATION - TYPICAL REINFORCED CONCRETE PARAPET DETAILS

SCALE: ¾" = 1'-0"

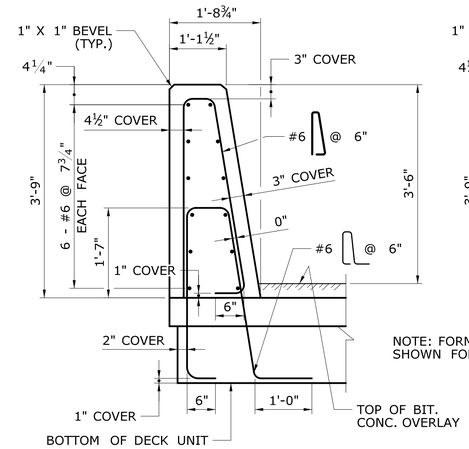

NOTE: FORMLINER NOT SHOWN FOR CLARITY.

PARAPET ON DECK UNIT

SCALE: ¾" = 1'-0"

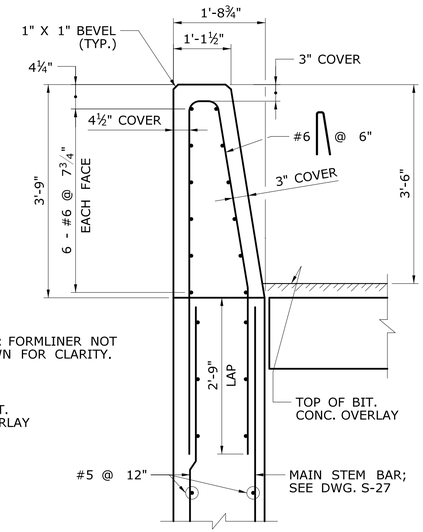

PARAPET ON WING WALLS AND BARRIER WALLS

SCALE: ¾" = 1'-0"

REINFORCEMENT SPLICE NOTES:

1. THE SPLICE LENGTH FOR THE REINFORCEMENT IN THE PARAPETS SHALL BE AS FOLLOWS UNLESS DIMENSIONED OTHERWISE:

BAR SIZE	SPLICE LENGTH
#6	2'-6"

2. THE SPLICES SHALL BE ALTERNATED SO THAT 50% OR LESS OF THE LONGITUDINAL BARS ARE SPLICED AT THE SAME LOCATION.

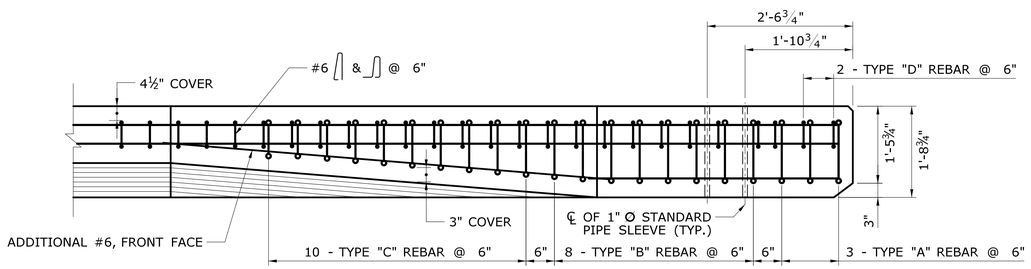

PLAN SECTION - VERTICAL TO SINGLE SLOPE TRANSITION A/-

SCALE: ¾" = 1'-0"

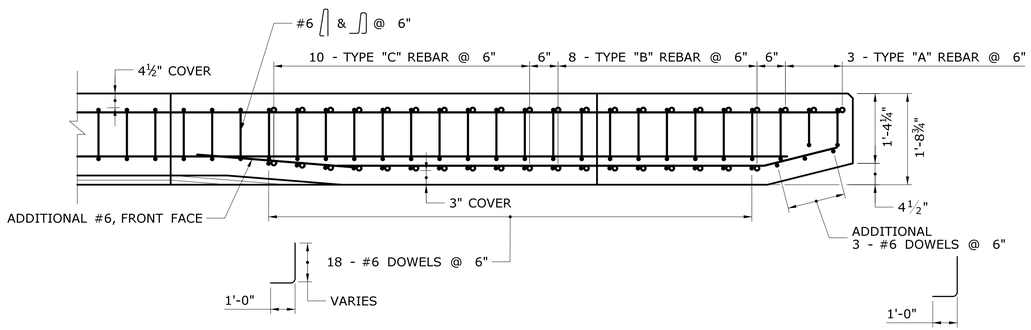

PLAN SECTION - VERTICAL TO SINGLE SLOPE TRANSITION B/-

SCALE: ¾" = 1'-0"

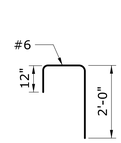

TYPE "A" REBAR

SCALE: N.T.S.

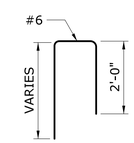

TYPE "B" REBAR

SCALE: N.T.S.

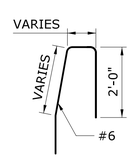

TYPE "C" REBAR

SCALE: N.T.S.

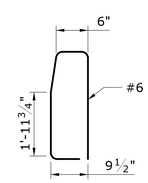

TYPE "D" REBAR

SCALE: N.T.S.

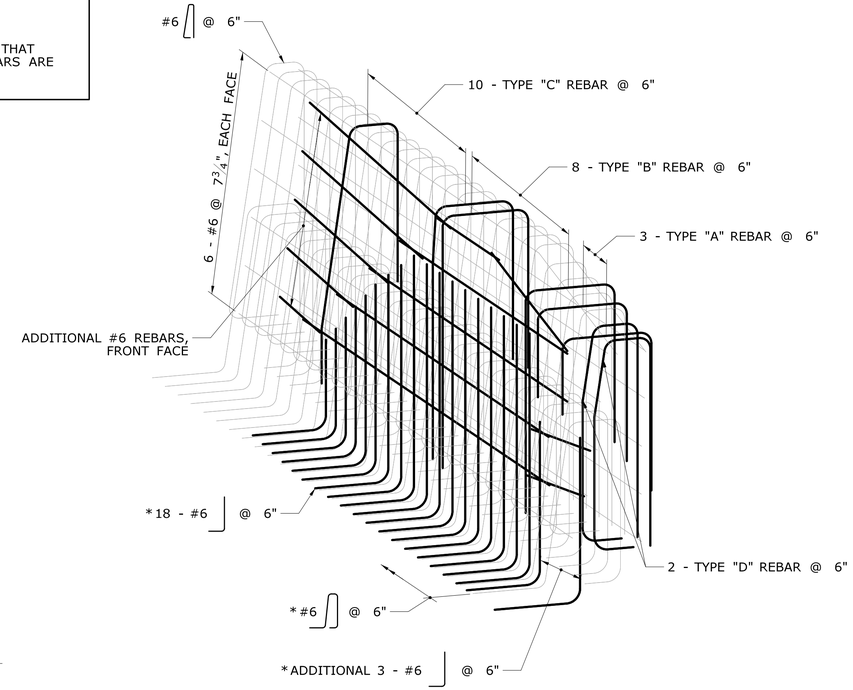

ISOMETRIC VIEW - REINFORCEMENT DETAIL AT PARAPET END AND TRANSITION

SCALE: N.T.S.

* NOTE: THESE BARS WILL BE STRAIGHT BARS ON TOP OF THE WING WALLS AND BARRIER WALLS.

REV.	DATE	REVISION DESCRIPTION

SIGNATURE BLOCK:
L. PEÑA — DESIGNER/DRAFTER
M. MCCLUSKEY — CHECKED BY:

PRIME AE, 100 GREAT MEADOW ROAD, WETHERSFIELD, CT 06109

CTDOT — CONNECTICUT DEPARTMENT OF TRANSPORTATION

PROJECT TITLE: REPLACEMENT OF BRIDGE NO. 02698 CARRYING ROUTE 149 (EAST HADDAM MOODUS ROAD) OVER DYKAS BROOK

TOWN(S): EAST HADDAM

DRAWING TITLE: SINGLE SLOPE PARAPET REINFORCEMENT

PROJECT NO.: 0040-0148

DRAWING NO.: S-29

SHEET NO.: 04-30

LASTED SAVED BY: lpena FILE NAME: c:\pw-wkrdir\primeeng-pw-01\ct - luis pena\dms07112\SB_CP_0040_0148_StrBorder.dgn
PLOTTED DATE: 4/21/2025