SPECIFICATIONS & BID FORM
FOR

"REPLACEMENT OF BRIDGE NO. 07143 QUAKER FARM ROAD OVER HALEYS BROOK"

GROTON, CONNECTICUT

Contract # 26-08

BID OPENING

DATE: **September 25, 2025**

TIME: 2:00 P.M. PREVAILING TIME

PLACE: TOWN HALL ANNEX
134 GROTON LONG POINT ROAD
(OPPOSITE FITCH HIGH SCHOOL)
GROTON, CONNECTICUT 06340

TOWN COUNCIL

RACHAEL FRANCO, MAYOR

PORTIA BORDELON
DAVID GOODE
BRUCE JONES
DAVID MCBRIDE
ROSCOE MERRITT
JULIETTE PARKER
ADAM J. PUCCINO, SR
JILL RUSK

TOWN MANAGER
JOHN BURT

DIRECTOR OF PUBLIC WORKS
GREG A. HANOVER, P.E.

PREPARED BY:
SLR INTERNATIONAL CORP.
99 Realty Dr, Cheshire, CT 06410

Town of Groton Public Works Department
Engineering Division

BID DOCUMENT

INDEX

ADVERTISEMENT FOR BIDS 3
INFORMATION FOR BIDDERS.....4
BID PROPOSAL 16
FORM OF CONTRACT.....35
PAYMENT BOND.....36
PERFORMANCE BOND.....38
GENERAL CONDITIONS 40
SUPPLEMENTARY CONDITIONS.....55
TECHNICAL SPECIFICATIONS 60

BID DOCUMENT

ADVERTISEMENT FOR BIDS
"REPLACEMENT OF BRIDGE NO. 07143 QUAKER FARM ROAD OVER HALEYS BROOK"

TOWN OF GROTON, CONNECTICUT
(Owner)

Sealed bids for "REPLACEMENT OF BRIDGE NO. 07143 QUAKER FARM ROAD OVER HALEYS BROOK" will be received by the Town of Groton at the Town Hall Annex, 134 Groton Long Point Road (across from R. E. Fitch High School) Groton, CT until 2:00 p.m., prevailing time, on September 25, 2025, and then at said office publicly opened and read aloud. Bids must be enclosed in a sealed envelope and designated as bid for "REPLACEMENT OF BRIDGE NO. 07143 QUAKER FARM ROAD OVER HALEYS BROOK".

Any bid may be withdrawn prior to the above scheduled time for opening of bids. Any bid received after the time and date specified will be returned unopened.

All Contract Documents may be examined at the following:

TOWN HALL ANNEX – 134 GROTON LONG POINT ROAD, GROTON, CT
PUBLIC WORKS DEPARTMENT

Project Description:
The project generally consists of, but is not limited to: Replacement of Bridge No. 058015, Quaker Farm Road over Haley's Brook, Groton, CT. The existing structure, consisting of two 54" dia. Corrugated metal pipes, is to be removed and replaced with a 26-foot span bridge consisting of prestressed concrete deck units supported by concrete abutments and pile foundations. A natural streambed will be constructed with native material. Regrading of embankment slopes is also required to provide a shelf for installation of guiderail.

Contract documents, including Plans and Specifications, are available on the Town of Groton Website: www.groton-ct.gov.

This contract is being funded under the Connecticut Department of Transportation State Local Bridge Program and subject to State set-aside and contract compliance requirements.

The Town of Groton reserves the right to waive any formalities or to reject any or all bids.

A non-mandatory pre-bid meeting will be held at the Project site – Quaker Farm Road over Haley's Brook in Groton, CT, on Thursday, September 11, 2025 at 11:00 AM.

Each bidder must deposit, with his bid, security in the form of bid bond or certified check subject to the conditions provided in the Information for Bidders.

No bidder may withdraw his bid within 60 days after the actual date of the opening thereof.

Greg A. Hanover, P.E.
Director of Public Works
Town of Groton, Connecticut

The Town of Groton is An Equal Opportunity/Affirmative Action Employer.

INFORMATION FOR BIDDERS

1. Sealed Bids
2. Method of Award
3. Bid Schedule
4. Arithmetic Discrepancies
5. Bid Security
6. Qualifications of BIDDER
7. Identity of SUB-CONTRACTORS
8. Bonds
9. Non-Resident Contractor Guarantee Bonds
10. Insurance
11. Receipt of Bonds & Insurance Certificates Prior to Signing Contract
12. Obligation of Bidder
13. Damages for Failure to Enter into Contract
14. Execution of Contract and Notice to Proceed
15. Time of Completion and Liquidated Damages
16. Addenda and Interpretations
17. Substitution Clause
18. Retainage
19. Laws and Regulations
20. List of Utilities in the Area
21. Sales Tax
22. Site Investigation and Conditions Affecting the Work
23. Permits
24. Work Area
25. Change Orders
26. Wages
27. Unbalanced Bids
28. OSHA Violations
29. Local Vendor Preference

INFORMATION FOR BIDDERS

1. Sealed Bids

   Sealed bids for "REPLACEMENT OF BRIDGE NO. 07143 QUAKER FARM ROAD OVER HALEYS BROOK" will be received by the Town of Groton at the Town Hall Annex, 134 Groton Long Point Road, Groton, CT until 2:00 p.m. prevailing time on September 25, 2025, and then at said office publicly opened and read aloud. Bids must be enclosed in a sealed envelope and designated as bid for "REPLACEMENT OF BRIDGE NO. 07143 QUAKER FARM ROAD OVER HALEYS BROOK".

   Any bid may be withdrawn prior to the above scheduled time for the opening of bids. Any bid received after the time and date specified will be returned unopened.

2. Method of Award

   The Town of Groton intends to award the contract to the lowest responsible bidder. The Town reserves the right to reject any and all bids and to award each contract to the bidder who is most responsive to the interests of the Town.

   If the lowest base bid submitted by a responsible bidder does not exceed the amount of funds then estimated by the Owner as available to finance the contract, the contract will be awarded on the base bid only. If such bid exceeds such amount, the Owner will reject all bids.

3. Bid Schedule

   Bids must be made on these forms and returned intact. Bidders will state both in writing and in figures, in ink or typewritten, the proposed price for each separate item of the work called for in the bid schedule, by which prices will be compared. If any price is omitted, the blank shall be filled with the highest price named by any bidder for that item or the bid may be rejected. Alterations and erasures must be initialed by the signer.

4. Arithmetic Discrepancies

   A. For the purpose of initial evaluation of bids, the following will be utilized in resolving arithmetic discrepancies found on the face of the bidding schedule as submitted by bidders:

      1. Obviously misplaced decimal points will be corrected.
      2. In case of discrepancy between unit price and extended price, the unit price will govern.
      3. Apparent errors in extension of unit prices will be corrected.
      4. Apparent errors in addition of lump sum and extended prices will be corrected.

   B. For the purpose of bid evaluation, the Town will proceed on the assumption that the bidder intends his bid to be evaluated on the basis of the unit prices,

extensions, and totals arrived at by resolution of arithmetic discrepancies as provided above and the bid will be so reflected on the abstract of bids.

5. Bid Security

If the total amount of the bid submitted exceeds $50,000, or if the bid contains any add alternates and the combination of the base bid plus all add alternates exceeds $50,000, then the bid must be accompanied by a CERTIFIED CHECK or a BID BOND, signed by a responsible Surety, in the amount of 10% of the total amount of the tendered bid and made payable to the order of the Town of Groton. All bid checks or bonds, except those of the lower three (3) bidders will be returned within ten (10) days of the opening of bids. Those of the lower three (3) bidders will be retained by the Town of Groton until one of the lower three (3) bidders signs the contract or until all bids are rejected; however, in no case will the bid check or bond be retained for more than 60 days unless forfeited as hereinafter stipulated. No bidder may withdraw his bid within 60 days after the actual date of the opening thereof.

Should there be reasons why the CONTRACT cannot be awarded within the specified period, the time may be extended by mutual agreement between the OWNER and the BIDDER.

If the total amount of the bid (or base bid plus alternates) submitted is $50,000 or less, then no bid security is required.

The Bid Bond and Surety's Letter of Intent must be provided by a Surety Company that meets all of the following qualifications as of the date of bid.

1. Licensed to do business in the State of Connecticut
2. Listed on the current U. S. Treasury "T" List
3. Rate A- or better by A. M. Best

6. Qualifications of BIDDER

The OWNER may make such investigations as he deems necessary to determine the ability of the BIDDER to perform the work, and the BIDDER shall furnish to the OWNER all such information and data for this purpose as the OWNER may request. The OWNER reserves the right to reject any bid if the evidence submitted by, or investigation of, such BIDDER fails to satisfy the OWNER that such BIDDER is properly qualified to carry out the obligations of the CONTRACT and to complete the work contemplated therein. Conditional bids shall not be accepted. Any CONTRACTOR, who is in litigation or arbitration with the Town at the time of the bid opening, or prior to the execution of the CONTRACT, may be considered an unacceptable BIDDER and may be disqualified.

7. Identity of SUB-CONTRACTORS

If any portion of the work is to be performed by persons or entities not considered to be part of the bidder's own forces, the successful bidder shall, upon notification of the award of a contract, furnish a written list of such other persons or entities and a description of the work to be performed by them. If requested by the Owner, the successful bidder shall

be required to establish, to the satisfaction of the Owner, the reliability and responsibility of such Sub-Contractors.

8. Bonds

A. Performance Bond

If the total bid price for the project exceeds **$50,000**, or if the bid contains any alternates and the combination of the base bid plus all Town accepted alternates exceeds $50,000, then either of the following is required:

1. The Contractor shall furnish a bond covering faithful performance of the Contract. Surety shall be qualified to do business in the State of Connecticut, listed on the current U. S. Treasury "T" list, and rated "A-" or better by A. M. Best. The cost of the bond premium shall be included in the Contract Sum. The amount of the bond shall be equal to 100 percent of the Contract Sum.

OR

2. In lieu of a Performance Bond, a security in a form acceptable to the Town (for example, letter of credit or an assigned passbook) in the amount of 100% of the Contract may be substituted.

The Contractor shall deliver the required security to the Owner on the date the agreement is entered into.

The Contractor shall require the attorney-in-fact, who executes the required bond on behalf of the surety, to affix thereto a certified and current copy of the power-of-attorney.

In the case where add alternates are part of the bid, and where acceptance of any alternates would cause the Contract Sum to exceed the $50,000 threshold, then the price of the alternate shall include the cost of the required bond or security.

B. Payment Bond

If the total bid price for the project exceeds **$100,000**, or if the bid contains any alternates and the combination of the base bid plus all Town accepted alternates exceeds $100,000, then either of the following is required:

1. The Contractor shall furnish a bond covering payment of obligations arising under the terms of the Contract. Surety shall be qualified to do business in the State of Connecticut, listed on the current U.S. Treasury "T" list, and rated "A-"or better by A.M. Best. The cost of the bond premium shall be included in the Contract Sum. The amount of the bond shall be equal to 100 percent of the Contract Sum.

OR

2. In lieu of a Payment Bond, a security in a form acceptable to the Town (for example, a letter of credit or an assigned passbook) in the amount of 100% of the Contract may be substituted.

The Contractor shall deliver the required security to the Owner on the date the Agreement is entered into.

The Contractor shall require the attorney-in-fact, who executes the required bond on behalf of the surety, to affix thereto a certified copy of the power-of-attorney.

In the case where add alternates are part of the bid, and where acceptance of any alternates would cause the Contract Sum to exceed the $100,000 threshold, then the price of the alternate shall include the cost of the required bond or security.

If the total bid (or base bid plus alternates) for the project is $100,000 or less, then in lieu of providing any security listed in Section 8.B, the Contractor can elect to substitute the following:

1. Provide certified lien waivers from each supplier and sub-contractor affirming that they have been paid for work and materials for which previous payment applications were issued by the Owner and payments received by the Contractor.

9. Non-Resident Contractor Guarantee Bonds

A Non-Resident Contractor is required to post a Guarantee Bond (form AU-766) or Cash Bond (form AU-72) with the State of Connecticut Department of Revenue Services (DRS) in the amount of 5% of the total contract price. This Bond will secure payment for applicable taxes payable to the State related to this Project. The State will issue a Certificate of Compliance once an acceptable bond has been submitted by the Non-Resident Contractor. This Certificate ofCompliance must be provided by the Contractor to the Town prior to the releaseof the first progress payment under the Contract, or the Town must remit 5% ofthe total contract value directly to the State. This 5% is in addition to the Projectretainage.

Special Notice SN2012(2), published by the State of Connecticut Department ofRevenue Services, details the procedures and requirements regarding theGuarantee Bond or Cash Bond. The Special Notice and bond forms can be obtained at the State of Connecticut Department of Revenue Services webpage, **www.ct.gov/DRS**.

10. Insurance

The Contractor must provide a CERTIFICATE OF INSURANCE as specified in the General and Supplementary Conditions.

11. Receipt of Bonds & Insurance Certificates Prior to Signing Contract

The Contractor to whom the contract shall be awarded must file the requisite BONDS and CERTIFICATE OF INSURANCE as specified and any other forms and documents required by the specifications prior to signing of the contract, and within 21 days from the date of receipt of notification of said award.

12. Obligation of Bidder

Bidders, if requested, must be able to present evidence satisfactory to the Director of Public Works that they have been regularly engaged in the business of constructing such work as they propose to execute, and that they are fully prepared with the necessary capital, materials, and equipment to conduct the work to be contracted for, and to begin it promptly when ordered.

Prior to submitting his bid, the bidder must inspect the site and thoroughly read all plans, specifications and bid and contract documents. The failure or omission of any bidder to examine any form, instrument or document and to thoroughly examine the site shall in no way relieve any bidder from any obligations in respect to his bid.

13. Damages for Failure to Enter into Contract

The party to whom the CONTRACT is awarded will be required to execute the CONTRACT within thirty (30) calendar days from the date when Notice of Award is delivered to the BIDDER. In case of failure of the BIDDER to execute the CONTRACT, the OWNER may at his option, consider the BIDDER in default, in which case the bid security accompanying the proposal shall become the property of the OWNER as liquidated damages and not as a penalty.

14. Execution of Contract and Notice to Proceed

The OWNER within twenty (20) days of receipt of acceptable PERFORMANCE BOND, PAYMENT BOND and CONTRACT signed by the party to whom the CONTRACT was awarded shall sign the CONTRACT and return to such party an executed duplicate of the CONTRACT. Should the OWNER not execute the CONTRACT within such period, the BIDDER may by written notice withdraw his signed CONTRACT. Such notice of withdrawal shall be effective upon receipt of the notice by the OWNER.

The Notice to Proceed shall be issued within ten (10) days of the execution of the CONTRACT by the OWNER. Should there be reasons why the Notice to Proceed cannot be issued within such period, the time may be extended by mutual agreement between the OWNER and the CONTRACTOR. If the Notice to Proceed has not been issued within the ten (10) day period or within the period mutually agreed upon, the CONTRACTOR may terminate the CONTRACT, whereupon it shall become null and void and all rights and obligations created thereunder shall be extinguished.

15. Time of Completion and Liquidated Damages

BIDDER must agree to commence work on or before a date to be specified in a written Notice to Proceed from the OWNER and to fully complete the project within 300 consecutive calendar days thereafter. Bidder must agree also to pay as liquidated damages, the sum of $500 for each consecutive calendar day thereafter as hereinafter provided in the GENERAL CONDITIONS.

It is hereby understood and mutually agreed, by and between the CONTRACTOR and the OWNER, that the date of beginning and the time for completion during the normal

working hours as specified in the General Conditions of the work to be done hereunder are essential conditions of this CONTRACT; and it is further mutually understood and agreed that the work embraced in this CONTRACT shall be commenced on a date to be specified in the "Notice to Proceed".

The CONTRACTOR agrees that said work shall be prosecuted regularly, diligently, and uninterruptedly at such rate of progress as will ensure full completion thereof within the time specified. It is expressly understood and agreed, by and between the CONTRACTOR and the OWNER, that the time for the completion of the work described herein is a reasonable time for the completion of same, taking into consideration the average climatic range and usual industrial conditions prevailing in this locality.

If the said CONTRACTOR shall neglect, fail or refuse to complete the work within the time herein specified, or any proper extensions thereof granted by the OWNER, then the CONTRACTOR does hereby agree, as a part consideration for the awarding of this CONTRACT, to pay to the OWNER the amount specified in the Information for Bidders, not as a penalty but as liquidated damages for such breach of CONTRACT as hereinafter set forth, for each and every calendar day that the CONTRACTOR shall be in default after the time stipulated in the CONTRACT for completion of the work.

The said amount is fixed and agreed upon by and between the CONTRACTOR and the OWNER because of the impracticability and extreme difficulty of fixing and ascertaining the actual damages the OWNER would in such event sustain, and said amount is agreed to be the amount of damages which the OWNER would sustain and said amount shall be retained from time to time by the OWNER from current periodic estimates.

It is further agreed that time is of the essence of each and every portion of this CONTRACT and of the specifications wherein a definite and certain length of time is fixed for the performance of any act whatsoever; and where under the CONTRACT an additional time is allowed for the completion of any work, the new time limit fixed by such extension shall be of the essence of this CONTRACT. The CONTRACTOR shall not be in default when the delay in completion of the work is due:

A. To any preference, priority or allocation order duly issued by the State or Federal Government

B. To unforeseeable cause beyond the control and without the fault or negligence of the CONTRACTOR, including, but not limited to, acts of God, or of the public enemy, acts of the OWNER, acts of another contractor in the performance of a contract with the OWNER, fires, floods, epidemics, quarantine restrictions, strikes, freight embargoes and severe weather.

The CONTRACTOR shall, within ten (10) days from the beginning of any such delay, unless the OWNER shall grant a further period of time prior to the date of final settlement of the CONTRACT, notify the OWNER, in writing, of the causes of the delay. The Owner shall ascertain the facts and extent of the delay and notify the CONTRACTOR within a reasonable time of its decision in the matter.

16. <u>Addenda and Interpretations</u>

All questions about the meaning or intent of the Contract Documents are to be directed to the Owner. Interpretations or clarifications considered necessary by the Owner in response to such questions will be issued by Addenda mailed or delivered to all parties recorded by the Owner as having received the Bidding Documents. Questions received less than ten (10) days prior to the date for opening of Bids may not be answered. Only questions answered by formal written Addenda will be binding. Oral and other interpretations or clarifications will be without legal effect.

Addenda will be issued to modify the Bidding Documents as deemed advisable by the Owner.

17. Substitution Clause

Wherever in the Plans and Specifications any item of equipment or material is designed by reference to a particular brand, manufacturer, or trade name, it is understood that an approved equal product, acceptable to the OWNER, may be substituted by the BIDDER or the CONTRACTOR.

18. Retainage

The Town of Groton reserves the right to retain 5% of the final contract price for a period not to exceed six (6) months from the date of final acceptance of the project.

19. Laws and Regulations

The bidder's attention is directed to the fact that all applicable Federal and State law, municipal ordinances, and the rules and regulations of all authorities having jurisdiction over construction of the project shall apply to the contract throughout, and they will be deemed to be included in the contract the same as though herein written out in full.

20. List of Utilities in the Area

Attention is called to the fact that the following Utility Companies have facilities in the area:

Groton Utilities – Water
Eversource – Electric
Frontier – Communications
Comcast Cablevision Co. – Communications
Thames Valley Communications, Inc. – Communications

Information and data reflected in the Contract Documents with respect to Underground Facilities at or contiguous to the site is based upon information and data furnished to Owner by owners of such Underground Facilities or others, and Owner does not assume responsibility for the accuracy or completeness thereof unless it is expressly provided otherwise in the Supplementary Conditions.

The Contractor should acquaint himself with and adhere to the regulations of those utilities which are in the area of this Contract.

When requested by the Contractor, all underground utilities will be located and marked on the surface by the controlling utility company at no cost to him. Contractor will be responsible for notifying the Utility clearinghouse, "Call-Before-You-Dig" 48 hours prior to any excavation, to allow for the location of the existing utilities by controlling Utility Company.

21. Sales Tax

Under the terms of the regulations referring to CONTRACTORS and SUBCONTRACTORS, issued by the STATE TAX COMMISSION in administration of the STATE Sales and Use Tax, to which the BIDDER is referred, the CONTRACTOR may purchase materials or supplies to be consumed in the performance of this contract without payment of tax and shall not include in his bid nor charge any use or sales tax thereon.

22. Site Investigation and Conditions Affecting the Work

Arrangements to visit the site may be made by calling the Public Works Department Engineering Division, (860) 448-4083, Monday through Friday, 8:30 a.m. to 3:30 p.m.

A. The Contractor acknowledges that it has taken steps reasonably necessary to ascertain the nature and location of the work, and that it has investigated and satisfied itself as to the general and local conditions which can affect the work or its cost, including but not limited to:

1. Conditions bearing upon transportation, disposal, handling, and storage of materials;
2. The availability of labor, water, electric power, and roads;
3. Uncertainties of weather, river stages, tides, or similar physical conditions at the site;
4. The conformation and conditions of the ground; and
5. The character of equipment and facilities needed preliminary to and during work performance.

B. The Contractor also acknowledges that it has satisfied itself as to the character, quality, and quantity of surface and subsurface materials or obstacles to be encountered insofar as this information is reasonably ascertainable from an inspection of the site, including all exploratory work done by the Town, as well from the drawings and specifications made a part of this contract. Any failure of the Contractor to take the actions described and acknowledged in this paragraph will not relieve the Contractor from responsibility for estimating properly the difficulty and cost of successfully performing the work, or for proceeding to successfully perform the work without additional expense to the Town.

C. The Town assumes no responsibility for any conclusions or interpretations made by the Contractor based on the information made available by the Town. Nor does the Town assume responsibility for any understanding reached or representation made concerning conditions, which can affect the work by any of its officers or

agents before the execution of this contract, unless that understanding or representation is expressly stated in this Contract.

D. The Contract Documents contain the provisions required for the construction of the project. Information obtained from an officer, agent or employee of the OWNER or any other person shall not affect the risks or obligations assumed by the CONTRACTOR or relieve him from fulfilling any of the conditions of the CONTRACT.

23. Permits

The Contractor must obtain all necessary construction and building permits; however, the fee for any permits issued by the Town of Groton shall be waived.

24. Work Area

Construction will be confined to the immediate work area only. Trespass on property other than Town property or easements acquired by the Town for the project will be by written permission of the property owner only.

25. Change Orders

Any deviations from, additions to, or deductions from either scope of work or contract price shall be submitted by the Contractor to the Town in the form of a contract change order. The Director of Public Works must approve this contract change order before said deviations, additions, or deductions shall be enacted.

Further, all changes in scope of work involving unit price items shall be governed by the unit price indicated by the Contractor on the Base Bid Form.

26. Wages

Bidder is directed to Paragraph 45 of the General Conditions for wage rate scales and legislation applicable to this contract.

27. Unbalanced Bids

An unbalanced bid is one in which the contractor's unit prices are:

A. Significantly higher or lower than the Engineer's estimate.

B. "Front loaded" so contractor receives a disproportionate payment for work done during the early stages of a project.

C. Token bid prices (i.e. penny unit bids).

While it is often impossible to designate precisely the dividing line between a balanced bid and an unbalanced bid, contractors should be aware that the Department may regard the unbalancing of a bid as so extreme, undeniable, or detrimental to the interests of the Town that it may question the contractor about the apparent unbalancing of the bid

proposal, and, if the contractor cannot provide a satisfactory explanation of the apparent unbalancing, and if the Department's assessment of the risk to the Town is unacceptable, reject the bid as nonresponsive.

28. OSHA Violations

In accordance with Connecticut General Statute Section 31-57b, no contract shall be awarded to a bidder if it is determined that the bidder (person or firm) has been cited for three (3) or more willful or serious violations of any occupational safety and health act or of any standard, order or regulation promulgated pursuant to such act during the three (3) year period preceding the date of bid opening.

29. Local Vendor Preference

The Town of Groton has adopted a policy of providing preference to selecting Local Vendors as outlined in this section. The term "Local Vendor" as used in this section shall mean, and be used interchangeably with, "Bidder" and "Contractor".

A. *Definition*: The term "Local Vendor" shall mean a company, firm, LLC, partnership, sole proprietorship or similar business with its principal place of business located within the Town of Groton. A business shall not be considered a local vendor unless satisfactory evidence has been submitted with the bid that clearly establishes that it has a bona fide principal place of business, including branches or satellite offices, in the Town of Groton. Such documentation shall include evidence of ownership such as real estate and personal property bills, a lease agreement for the real estate from which the principal place of business operates, copies of deeds, or copies of paid real estate and personal property bills.

B. *Application:* To be considered, and be given preference as a local vendor, the bidder must complete and submit with their bid, a local vendor registration affidavit of eligibility (included hereinafter) together with copies of any of the documents listed above in paragraph A. A local vendor registration affidavit of eligibility submitted after bids are opened will not be considered.

C. *Implementation:* If the total bid amount, together with any add or deduct alternates the Town wishes to accept, submitted by a qualified responsive Local Vendor is not more than five percent (5%) higher than the lowest bid, then the Town has the right to award the contract to the local vendor provided he agrees to match the lowest bid.

In the instance of two or more Local Vendors being within the 5% threshold, then the qualified responsive local vendor with the lowest actual bid will be given the first opportunity to match the low bid.

For bids involving unit prices, and when the qualified responsive local vendor agrees to match the low total bid amount, he must also submit updated individual unit prices showing the total amount to meet the low bid. The Town of Groton reserves the right to approve or disapprove which unit prices are used to net the total bid amount.

D. *Notification:* When a local vendor meets the criteria for submitting a successful bid and has provided all of the required documentation, a letter signed by the Public Works Director will be sent to the local vendor. The letter will notify the local vendor that they have met all of the criteria of this provision and will formally request that they respond in writing to the Town **within five (5) business days** that they are willing to match the lowest price bid. In the case of bids with unit prices, the local vendor must also include a revised list of unit prices. Once the local vendor has agreed to match the low bid and all other conditions of a successful bid have been met, the contract will be awarded to the local vendor.

E. *Exemptions:* Any bid made under the following are exempt from this section:

1. Projects utilizing any Federal or State of Connecticut funds or grants.
2. Projects utilizing any special grant that stipulates the award must be made to the lowest qualified bidder.

END OF SECTION

BID PROPOSAL
"REPLACEMENT OF BRIDGE NO. 07143 QUAKER FARM ROAD OVER HALEYS BROOK"

Proposal of _____hereinafter called "BIDDER"

*a corporation of the State of_____

*a partnership, or

*an individual doing business as_____

To the Town of Groton, Connecticut

Gentlemen:

The undersigned hereby declares that no person or persons other than those named herein are interested in this proposal or in the Contract proposed to be taken; that it is made without any connection with any other person making any proposal for the same work, and is in all respects fair and without collusion or fraud; that no person acting for or employed by the Town of Groton is directly interested therein, or in the supplies or works to which it relates, or in any portion of the profits thereof; that it is understood that the Town, its agents and employees are not to be in any manner held responsible for the accuracy of, or bound by, the estimates or borings or plan of borings relative to the work and appearing on plans or in the foregoing notice; and that all such estimates, etc., are to be considered solely for the purpose of filling out and comparing the several proposals.

The undersigned further declares that he has carefully examined the Information For Bidders, Contract documents, including the Plans and Specifications, and has inspected the site and will contract to provide all necessary tools, apparatus and implements, freight, cartage, and expense, and to do all the work and furnish all the materials necessary in the manner and upon the conditions specified and upon the following terms at the prices specified on the following pages.

The undersigned agrees to furnish satisfactory bonds and insurance as required by Paragraph 1 of the General Conditions, Section 8, 9, 10 and 11 of the Information for Bidders and by the Supplementary Conditions Section 1, and to execute within 30 days after notice of the award, a formal contract with the Town of Groton for the fulfillment of this proposal, and it is agreed that in case of failure on the part of the undersigned to do so, the certified check or bid bond deposited herewith shall be forfeited to the Town of Groton as liquidated damages for such failure.

BIDDER hereby agrees to commence work under this contract on or before a date to be specified in written NOTICE TO PROCEED of the OWNER and to fully complete the project in strict compliance with the Contract Documents within 300 days of the start date in the notice to proceed. BIDDER further agrees to pay as liquidated damages, the sum of $500 for each consecutive calendar day thereafter as hereinbefore provided in Paragraph 15 of the Information for Bidders.

BIDDER acknowledges receipt of the following addenda:

_____

_____

The undersigned further agrees, in case of a corporation or fictitious trade name, that an acceptable certificate will be filed showing the proper officer or person authorized to sign said contract.

Amounts are to be shown in both words and figures. In case of discrepancy, the amount shown in words will govern.

Any unit prices shall include all labor, materials, bailing, shoring, removal, overhead, profit, insurance, etc., to cover the finished work of the several kinds called for.

Bidder understands that the Owner reserves the right to reject any or all bids and to waive any formalities in the bidding.

The bidder agrees that this bid shall be good and may not be withdrawn for a period of 60 calendar days after the scheduled closing time for receiving bids.

The bid Security attached in the sum of:
_____dollars ($_____)

is to become the property of the Owner in the event the Contract and Contract Bonds are not executed within the time above set forth, as liquidated damages for the delay and additional expense to the Owner caused thereby.

"REPLACEMENT OF BRIDGE NO. 07143 QUAKER FARM ROAD OVER HALEYS BROOK"
GROTON, CONNECTICUT

SCHEDULE OF PRICES
"REPLACEMENT OF BRIDGE NO. 07143 QUAKER FARM ROAD OVER HALEYS BROOK"
GROTON, CONNECTICUT

NOTE: All prices must be written in ink or typewritten, in words and in figures for the entire proposal. In case of discrepancy, words will take precedence over numbers and unit prices will take precedence over extended prices.

ITEM	EST. QTY.	BRIEF DESCRIPTION AND UNIT PRICE IN WORDS	PRICE IN FIGURES
1.	LS	Mobilization and Demobilization _____dollars _____cents	$_____
2.	LS	Construction Surveying _____dollars _____cents	$_____
3.	LS	Removal and Site Preparation _____dollars _____cents	$_____
4.	LS	Sediment and Erosion Control _____dollars _____cents	$_____
5.	LS	Handling Water _____dollars _____cents	$_____
6.	LS	Roadway Reconstruction _____dollars _____cents	$_____

ITEM	EST. QTY.	BRIEF DESCRIPTION AND UNIT PRICE IN WORDS	PRICE IN FIGURES
7.	LS	Channel Reconstruction _____dollars _____cents	$_____
8.	LS	Bridge Substructure _____dollars _____cents	$_____
9.	LS	Drilled Shafts _____dollars _____cents	$_____
10.	Est.	Obstructions Twelve Thousand Eight Hundred dollars And Zero _____ cents	$_____12,800.00
11.	LS	Bridge Superstructure _____dollars _____cents	$_____
12.	LS	Bridge Rail & Guiderail System _____dollars _____cents	$_____
13.	LS	Site Restoration _____dollars _____cents	$_____
14.	LS	Maintenance & Protection of Traffic _____dollars _____cents	$_____

THE TOTAL BID OF ITEMS 1 THROUGH 14, AS COMPUTED BY THE BIDDER, USING THE ESTIMATED QUANTITIES SHOWN:

IN FIGURES:_____

IN WORDS:_____

The following unit prices will be used to adjust the above lump sum price to compensate for modifications to the Work indicated by revisions to the Contract Documents. It is understood that these unit prices will be used for additions to the lump sum price. Each unit adjustment prices shall include all costs (directs, indirects, overhead, and profit) for furnishing and installing the unit complete and shall apply only to the specific item designated. Unit adjustment prices are intended for use on items to be constructed in conjunction with this project only. This work shall be constructed complete per the Construction Details. Prices shall be held regardless of actual quantity.

ITEM	**UNIT OF MEASURE**	**UNIT PRICE**
Drilled Shaft (2.5 FT)	LF	$ /LF
Drilled Shaft Earth Excavation (2.5 FT)	LF	$ /LF
Drilled Shaft Rock Excavation (2.5 FT)	LF	$ /LF

Summary of Item Descriptions

1. MOBILIZATION AND DEMOBILIZATION

The work under this item shall include all personnel, materials, equipment, and labor for the movement of all the contractor's field offices, buildings, facilities, and equipment to and from the project site as necessary for the performance of the work. This item shall also include permits, quality control, material testing and certification, as-built drawings, bonds, and insurance as may be required. This item shall also include all site clean-up and restoration and project close-out.

This item shall be based on a lump sum value and paid based on the percentage of work completed and accepted in accordance with Section 9.75.04 of Form 819, or as determined by the Engineer.

The following list of sub-items has been provided to assist in the development of the lump sum bid price for Mobilization and Demobilization but shall not be construed as a complete list of items required.

CTDOT Item Number	CTDOT Item Description
0975004	Mobilization and Project Closeout

2. CONSTRUCTION SURVEYING

This item shall include all construction layout and reference staking necessary for the proper control and satisfactory completion of all the work per the Contract Documents. Also included shall be the protection of existing benchmarks, property, highway and control monuments.

This item shall be based on a lump sum value and paid based on the percentage of work completed and accepted as determined by the Engineer.

The following list of sub-items has been provided to assist in the development of the lump sum bid price for this Construction Surveying but shall not be construed as a complete list of items required.

CTDOT Item Number	CTDOT Item Description
0980020	Construction Surveying

3. REMOVALS AND SITE PREPARATION

This item shall include all work associated with clearing and grubbing, removal and relocation of existing signs, and removal of existing guiderail systems to the limits designated in the contract documents or as directed by the Engineer. This item shall include all work associated with the removal of all existing culvert features; including but not limited to the pipes and stone masonry headwalls. This item shall also include protection of existing site features scheduled to remain.

This item shall also include all coordination with utility companies, protection and temporary support of all existing utilities.

This item shall be based on a lump sum value and paid based on the percentage of work completed and accepted as determined by the Engineer.

The following list of sub-items has been provided to assist in the development of the lump sum bid price for Removals and Site Preparation but shall not be construed as a complete list of items required.

CTDOT Item Number	CTDOT Item Description
0201001	Clearing and Grubbing
0503866A	Removal of Existing Culvert (Site No. 1)
0912504	Remove Two Cable Guide Railing
1206023A	Removal and Relocation of Existing Signs

4. SEDIMENT AND EROSION CONTROL

This item shall include all materials, equipment, and labor to establish, maintain, replace if necessary and remove at the completion of construction, sediment and erosion controls as indicated on the Contract Documents and as directed by the Engineer. This shall include but is not limited to construction entrance anti-tracking pads, all sedimentation filter fence systems, sedimentation control at catch basins, erosion control blankets, and hay bales. Also included shall be construction, maintenance, and erosion control for temporary stockpile areas.

This item shall be based on a lump sum value and paid based on the percentage of work completed and accepted as determined by the Engineer.

The following list of sub-items has been provided to assist in the development of the lump sum bid price for Sediment and Erosion Control but shall not be construed as a complete list of items required.

CTDOT Item Number	CTDOT Item Description
0219001	Sedimentation Control System

5. HANDLING WATER

This item shall include work required to convey stream flows through the project site and mitigate or remove groundwater in excavation in accordance with the Contract Documents. This work includes all materials, equipment, and labor to design, install, maintain, remove, and dispose of a temporary water handling system as well as a cofferdam and dewatering system necessary to facilitate dewatering of excavated areas.

This item shall be based on a lump sum value and paid based on the percentage of work completed and accepted as determined by the Engineer.

The following list of sub-items has been provided to assist in the development of the lump sum bid price for Handling Water but shall not be construed as a complete list of items required.

CTDOT Item Number	CTDOT Item Description
0204001	Cofferdam and Dewatering
0204151A	Handling Water

6. ROADWAY RECONSTRUCTION

This item shall include all roadway work per the Contract Documents. This works includes all materials, equipment, and labor to cut and remove existing pavement. Also included shall be all earth excavation, disposal of materials, and formation of subgrade.

This works includes all materials, equipment, and labor to furnish, place and compact subbase, processed aggregate base, and bituminous concrete pavement, including tack coat, sawing for joints, sealing of joints and cracks, and asphaltic plug expansion joints.

This work shall include all materials, equipment, and labor to furnish, place, and compact processed aggregate along the edge of pavement beneath the guiderail as shown in the Contract Documents.

This work includes all materials, equipment, labor, and incidentals to furnish and install retroreflective epoxy resin pavement markings of the width and color specified in the Contract Documents, at the locations indicated, and in accordance with the Contract Documents.

This item shall be based on a lump sum value and paid based on the percentage of work completed and accepted as determined by the Engineer.

The following list of sub-items has been provided to assist in the development of the lump sum bid price for Roadway Reconstruction but shall not be construed as a complete list of items required.

CTDOT Item Number	CTDOT Item Description
0202000	Earth Excavation
0202529	Cut Bituminous Concrete Pavement
0209001	Formation of Subgrade
0212000	Subbase
0304002	Processed Aggregate Base
0305000	Processed Aggregate
0406171	HMA S0.5
0406173	HMA S0.25
0406194A	Joint and Crack Sealing of Bituminous Concrete Pavement
0406238	Non-Tracking Asphalt Tack Coat
0406303A	Sawing and Sealing Joints
0406312A	Gutter Line Sealing for Bridges
1210102	4” Yellow Epoxy Resin Pavement Markings

7. CHANNEL RECONSTRUCTION

This item shall include all channel work per the Contract Documents. This work includes all materials, equipment, and labor to excavate, stockpile, and reuse existing channel material as well as procuring, transporting, placing, and washing-in supplemental streambed material.

This work includes all materials, equipment, and labor to furnish and place rounded stone riprap.

This item shall be based on a lump sum value and paid based on the percentage of work completed and accepted as determined by the Engineer.

The following list of sub-items has been provided to assist in the development of the lump sum bid price for Channel Reconstruction but shall not be construed as a complete list of items required.

CTDOT Item Number	CTDOT Item Description
0202216A	Excavation and Reuse of Channel Bottom Material
0202217A	Supplemental Streambed Material
0202218A	Washing-In Supplemental Streambed Material
0703014A	Rounded Riprap

8. BRIDGE SUBSTRUCTURE

This item shall include all materials, equipment, and labor to construct complete in place the bridge abutments and wingwalls in accordance with the Contract Documents. This item also includes the excavation necessary to construct the abutments, placement of crushed stone below the footings, placement of pervious structure backfill, and dampproofing of the abutments and wingwalls as shown in the Contract Documents.

This item shall be based on a lump sum value and paid based on the percentage of work completed and accepted as determined by the Engineer.

The following list of sub-items has been provided to assist in the development of the lump sum bid price for Bridge Substructure but shall not be construed as a complete list of items required.

CTDOT Item Number	CTDOT Item Description
0203202	Structure Excavation – Earth (Excluding Cofferdam and Dewatering)
0216000	Pervious Structure Backfill
0601064	Abutment and Wall Concrete
0601066	Column and Cap Concrete
0601504	1” Preformed Expansion Joint Filler for Bridges
0601640	1” Closed Cell Elastomer
0602030	Deformed Steel Bars – Galvanized
0708001	Dampproofing
0728032A	No. 6 Crushed Stone

9. DRILLED SHAFTS

This item shall include all materials, equipment, and labor to construct complete in place the drilled shafts supporting the bridge substructure. This item also includes furnishing and mobilizing the equipment required for the construction of the drilled shafts.

This work shall include all excavation (earth and rock) necessary for the installation of the drilled shafts and work required to address obstructions encountered.

This work shall also include integrity testing of the installed drilled shafts in accordance with the Contract Documents.

This item shall be based on a lump sum value and paid based on the percentage of work completed and accepted as determined by the Engineer.

The following list of sub-items has been provided to assist in the development of the lump sum bid price for Drilled Shafts but shall not be construed as a complete list of items required.

CTDOT Item Number	CTDOT Item Description
0701071	Drilled Shaft (2.5 ft)
0701073	Drilled Shaft Earth Excavation (2.5 ft)
0701099	Furnishing Drilled Shaft Drilling Equipment
0701261	Drilled Shaft Rock Excavation (2.5 ft)
0702771A	Integrity Testing – Reflection

10. OBSTRUCTIONS

This item shall include all materials, equipment, and labor to address obstructions encountered during the installation of the drilled shafts. Obstructions shall be as defined in Form 819 Section 7.01.03-13.

This item has an estimated value. Payment will be as specified under Article 1.09.04 – Extra and Cost-Plus Work.

The following list of sub-items has been provided to assist in the development of the lump sum bid price for Drilled Shafts but shall not be construed as a complete list of items required.

CTDOT Item Number	CTDOT Item Description
0701190	Obstructions

11. BRIDGE SUPERSTRUCTURE

This item shall all include all materials, equipment, and labor to construct complete in place the bridge superstructure including precast concrete deck units and appurtenances, post-tensioning strands and grout, and steel-laminated elastomeric bearing pads.

The work includes all materials, equipment, and labor to place the reinforced concrete deck and bridge curbing including concrete, galvanized reinforcing, and membrane waterproofing.

This work shall include the construction of the end blocks including concrete, galvanized reinforcing, and simulated stone masonry.

This work shall also include all materials, equipment, and labor to apply a penetrating sealer protective compound to the leading ends, tops, and roadside faces of the end blocks and bridge curbs.

This item shall be based on a lump sum value and paid based on the percentage of work completed and accepted as determined by the Engineer.

The following list of sub-items has been provided to assist in the development of the lump sum bid price for Bridge Superstructure but shall not be construed as a complete list of items required.

CTDOT Item Number	CTDOT Item Description
0514201	Prestressed Deck Units (3'-0" x 1'-0")
0514217	Prestressed Deck Units (4'-0" x 1'-0")
0521001	Elastomeric Bearing Pads
0601062	Footing Concrete
0601091A	Simulated Stone Masonry
0601118	Bridge Deck Concrete
0601123	Approach Slab Concrete
0601124	Barrier Wall Concrete
0602030	Deformed Steel Bars – Galvanized
0707009A	Membrane Waterproofing (Cold Liquid Elastomeric)
0819002A	Penetrating Sealer Protective Compound

12. BRIDGE RAIL AND GUIDERAIL SYSTEMS

This item shall include all materials, equipment, labor, and incidents to furnish and install a metal bridge rail on the bridge superstructure in accordance with the Contract Documents. This item shall also include all materials, equipment, labor, and incidentals to furnish and install a metal beam rail system (R-B MASH) in accordance with the Contract Documents.

This item shall include all materials, equipment, labor, and incidentals to furnish and install guiderail attachments in accordance with the Contract Documents, including drilling and grouting anchor bolts and other incidental work.

These items shall include all materials, equipment, labor, and incidentals to furnish and install guiderail end anchorages of the type specified in the Contract Documents, at the locations indicated, and in accordance with the Contract Documents; including excavation, concrete, reinforcing steel, drilling and grouting, backfilling and other incidental work.

This item shall be based on a lump sum value and paid based on the percentage of work completed and accepted as determined by the Engineer.

The following list of sub-items has been provided to assist in the development of the lump sum bid price for Bridge Rail & Guiderail Systems but shall not be construed as a complete list of items required.

CTDOT Item Number	CTDOT Item Description
0904303A	Metal Bridge Rail – Three Rail (Traffic)
0910173A	R-B 350 Bridge Attachment – Vertical Shape Parapet
0910300A	Metal Beam Rail (R-B MASH)
0911923A	R-B End Anchorage – Type I
0911924A	R-B End Anchorage – Type II

13. SITE RESTORATION

This item shall include all materials, equipment, labor, and incidents to furnish and place topsoil, erosion control matting, fertilizer, seed, and conservation seeding for slopes on all areas indicated in the Contract Documents or where designated by the Engineer. This item shall include stripping and stockpiling existing topsoil.

This work shall include all materials, equipment, labor, and incidentals to furnish and install plantings and plugs as shown on the Contract Documents.

This item shall include all materials, equipment, labor, and incidentals to furnish and install bridge identification placards.

This item shall be based on a lump sum value and paid based on the percentage of work completed and accepted as determined by the Engineer.

The following list of sub-items has been provided to assist in the development of the lump sum bid price for this item but shall not be construed as a complete list of items required.

CTDOT Item Number	CTDOT Item Description
0944000	Furnishing and Placing Topsoil
0949000	Wood Chip Mulch
0949060	Aronia melanocarpa, Black Chokeberry, 3’-4’ HT. B.B.
0949076	Iris versicolor, Blue Flag Iris, 2” Peat Pot
0949087	Clethra alnifolia, Summersweet, 3’-4’ HT. B.B.
0949188	Pontederia cordata, Pickerel Weed, 2” Plug
0949215	Acorus americanus, Sweetflag, 2” Plug
0949309	Lyonia ligustrina, Maleberry, 3’-4’ HT. B.B.
0949550	Cephalanthus occidentalis, Buttonbush, 3’-4’ HT. B.B.
0949816	Alnus incana, Speckled Alder, 3’-4’ HT. B.B.
0950040A	Conservation Seeding for Slopes
0950013	Erosion Control Matting
1208931	Sign Face – Sheet Aluminum (Type IX Retroreflective Sheeting)
1208937	Sign Face – Sheet Aluminum (Type XI Retroreflective Sheeting)

14. MAINTENANCE & PROTECTION OF TRAFFIC

This item shall include all work associated with protection and safety of civilians and workers with the vicinity of the project. This shall include but is not limited to all materials, equipment, services, and labor to furnish, erect, maintain, move, adjust, clean, relocated, store, and remove sufficient barriers including temporary traffic barriers and construction barricades.

This work shall also include adjusting the location of the barriers and barricades to provide daily access to the construction site.

This item shall be based on a lump sum value and paid based on the percentage of work completed and accepted in accordance with Section 9.71.04 of Form 819 or as determined by the Engineer.

The following list of sub-items has been provided to assist in the development of the lump sum bid price for this item but shall not be construed as a complete list of items required.

CTDOT Item Number	CTDOT Item Description
0822100.01	Temporary Traffic Barrier
0971001A	Maintenance and Protection of Traffic
1220027	Construction Signs

The above provides a general description of the work associated with each pay item comprising the work indicated on the plans and in the specifications. Payment under each item is intended to include all equipment, materials, labor, and coordination necessary for the completion of the work. Although the above descriptions of work may be limited, the Schedule of Values, as defined, shall be construed to include <u>all</u> costs associated with performing the work. The Contractor's bid shall be deemed to convey pricing inclusive of all aspects of the work indicated on the plans and in the specifications, complete. For any work described or indicated on the plans, in the special provisions, or within the construction documents, for which there may not be a specific pay item, the cost for such work shall be included in the price for related item(s) comprising the work. Any questions relating to payment shall be raised during the bid period.

The undersigned offers the following information as evidence of his qualifications to perform the work as bid upon according to all requirements of the Plans and Specifications.

1. Have been in business under present business name: _____ years.

2. Ever failed to complete any work? _____

3. List the more important contracts recently completed by you, stating approximate cost for each, and the month and year completed.

a. Location_____

Project/Phone#_____

Engineer/Phone#_____

Completion Date_____

Amount of Contract_____

b. Location_____

Project/Phone#_____

Engineer/Phone#_____

Completion Date_____

Amount of Contract_____

c. Location_____

Project/Phone#_____

Engineer/Phone#_____

Completion Date_____

Amount of Contract_____

4. Bank Reference/Phone#_____

This firm consists of the following members:

Full Name Residence

_____

_____

_____

_____

The officers are:

Full Name Residence

President:_____

Treasurer:_____

Directors:_____

_____

_____

Respectfully Submitted:

_____
(Firm Name)

SEAL: (If bid is by a Corporation)

By: _____
(Signature)

_____
(Typed Name and Title)

_____

_____
(Business Address)

_____
(Telephone)

_____
(Fax)

_____
(Email)

(ACKNOWLEDGMENT OF PRINCIPAL, IF A CORPORATION)

STATE OF _____
ss:
COUNTY OF _____

ON THIS_____ DAY OF_____, 20__, BEFORE ME PERSONALLY CAME AND APPEARED_____, TO ME KNOWN, WHO, BEING BY ME DULY SWORN, DID DEPOSE AND SAY THAT HE RESIDES AT _____, THAT HE IS THE_____ OF _____, THE CORPORATION DESCRIBED IN AND WHICH EXECUTED THE FOREGOING INSTRUMENT THAT HE KNOWS THE SEAL OF SAID CORPORATION - THAT ONE OF THE IMPRESSIONS AFFIXED TO SAID INSTRUMENT IS AN IMPRESSION OF SUCH SEAL - THAT IT WAS SO AFFIXED BY ORDER OF THE DIRECTORS OF SAID CORPORATION, AND THAT HE SIGNED HIS NAME THERETO BY LIKE ORDER.

(SEAL) _____
(NOTARY PUBLIC)

****

(ACKNOWLEDGMENT OF PRINCIPAL, IF A PARTNERSHIP)

STATE OF_____
ss:
COUNTY OF _____

ON THIS_____DAY OF_____, 20__, BEFORE ME PERSONALLY CAME AND APPEARED _____, TO ME KNOWN AND KNOWN TO ME TO BE ONE OF THE MEMBERS OF THE FIRM OF_____DESCRIBED IN AND WHO EXECUTED THE SAME AS AND FOR THE ACT AND DEED OF SAID FIRM.

(SEAL) _____
(NOTARY PUBLIC)

****

(ACKNOWLEDGMENT OF PRINCIPAL, IF AN INDIVIDUAL)
STATE OF_____
ss:
COUNTY OF_____

ON THIS_____DAY OF_____, 20__, BEFORE ME PERSONALLY CAME AND APPEARED _____TO ME KNOWN AND KNOWN TO ME TO BE THE PERSON DESCRIBED IN AND WHO EXECUTED THE SAME.

(SEAL) _____
(NOTARY PUBLIC)

TOWN OF GROTON

LOCAL VENDOR REGISTRATION
AFFIDAVIT OF ELIGIBILITY

Legal Name of Business:_____

Business Type: ☐Corporation ☐LLC ☐Partnership ☐Sole Proprietorship ☐Other

Physical Groton Address:_____

Mailing Address (if different):_____

City:_____ State:_____ Zip Code:_____

Owner/Principal Name:_____

Phone:_____ E-Mail:_____

Supporting Documentation Attached (check one):

Copy of cancelled check for payment of real estate or personal property taxes
Copy of long term lease of the real estate from which the business is operated
Copy of deed
Other:_____

Under penalty of perjury, the undersigned states that the foregoing statements are true and correct.
Authorized Signature:_____ Date:_____

Printed Name:_____ Title:_____

Personally appeared,_____ owner/principal of _____, signer and sealer of the foregoing instrument and acknowledged the truth of the foregoing before me on the _____day of_____in the year_____

_____
Notary Public
My Commission expires:_____

BID BOND

KNOW ALL MEN BY THESE PRESENTS, that we, the undersigned, _____

_____ as Principal, and _____

as Surety, are hereby held and firmly bound unto The Town of Groton as owner in the penal sum of _____ for the payment of which, well and truly to be made, we hereby jointly and severally bind ourselves, our heirs, executors, administrators, successors and assigns.

Signed this day of , 20__

The condition of the above obligation is such that whereas the Principal has submitted to The Town of Groton a certain bid, attached hereto and hereby made a part hereof to enter into a contract in writing for the

NOW, THEREFORE,

A. If said Bid shall be rejected, or in the alternate,

B. If said Bid shall be accepted and the Principal shall execute and deliver a contract in the Form of Contract attached hereto, properly completed in accordance with said Bid, and shall furnish a bond for his faithful performance of said contract, and for the payment of all persons performing labor or furnishing materials in connection therewith, and shall provide the required evidence of insurance,

THEN, this obligation shall be void, otherwise the same shall remain in force and effect; it being expressly understood and agreed that the liability of the Surety for any and all claims hereunder shall, in no event, exceed the penal amount of this obligation as herein stated.

The Surety, for value received, hereby stipulates and agrees that the obligations of said Surety and its bond shall be in no way impaired or affected by any extension of the time within which the Owner may accept such Bid; and said Surety does hereby waive notice of any such extension.

IN WITNESS WHEREOF, the Principal and the Surety have hereunto set their hands and seals, and such of them as are corporations have caused their corporate seals to be hereto affixed and these presents to be signed by their proper officers, the day and year first set forth above.

ATTEST:

_____	_____(S)
(Principal) Secretary	Principal
(SEAL)	
_____	By _____ (S)
Witness as to Principal	Attorney-in-Fact
_____	_____
(Address - Zip Code)	(Address - Zip Code)

ATTEST:

_____	_____
(Surety) Secretary	Surety
(SEAL)	
_____	By _____(S)
Witness as to Surety	Attorney-in-Fact
_____	_____
(Address - Zip Code)	(Address - Zip Code)

FORM OF CONTRACT
TOWN OF GROTON
CONTRACT # 26-08

This Contract is entered into this ____ day of _____, 20__, between the TOWN OF GROTON, hereinafter called the TOWN and _____ hereinafter called the CONTRACTOR, whereby the CONTRACTOR agrees to complete the work on the project entitled "REPLACEMENT OF BRIDGE NO. 07143 QUAKER FARM ROAD OVER HALEYS BROOK" in accordance with the contract documents which consist of the Instructions to Bidders, the Proposal, General and Supplementary Conditions, plans and specifications and which are hereby made part of this Contract. The CONTRACTOR agrees to carry on the work with diligence and dispatch, and to furnish such equipment and labor as is consistent with good construction practice and furnish the completed project to the TOWN in a good and usable condition.

The TOWN agrees that it will pay the CONTRACTOR as specified in the Specifications and the Proposal, and upon satisfactory completion of the work, it will accept the project. After completion of the project, and acceptance by the TOWN the CONTRACTOR shall submit an itemized final estimate. No later than 31 days after acceptance of the final estimate by the TOWN, the TOWN shall pay 95% of the Contract price. No later than six (6) months after acceptance of the final estimate, the TOWN will pay the 5% retained, unless in that time the materials or workmanship in the project shall have been found to be defective.

The total payment will be
_____
($_____).

Signed at Groton, Connecticut this _____ day of _____, 20__

For the CONTRACTOR

_____

_____

FOR TOWN OF GROTON

_____
John Burt
Town Manager

_____
Delia Morrison
Director of Finance

_____
Greg A. Hanover, P.E.
Director of Public Works

PAYMENT BOND

Bond #_____

KNOW ALL MEN BY THESE PRESENTS:

That we _____
(Name of Contractor)
a _____hereinafter called "Principal" and
(corporation, partnership or individual)

_____, of _____, State of _____,
(Surety) *(City/Town)*

hereinafter called "Surety" are held and firmly bound unto _____,
(Owner)
of _____, hereinafter called "Owner", in the penal sum of
(City/Town, State)
_____ Dollars
($_____) in lawful money of the United States, for the payment of which sum well and truly to be made, we bind ourselves, our heirs, executors, administrators and successors, jointly and severally, firmly by these presents.

THE CONDITION OF THIS OBLIGATION is such that Whereas, the Principal entered into a certain contract with the Owner, dated the _____ day of _____, 20__, a copy of which is hereto attached and made a part hereof for the construction of:

REPLACEMENT OF BRIDGE NO. 07143 QUAKER FARM ROAD OVER HALEYS BROOK

NOW, THEREFORE, if the Principal shall make payment to all persons, firms, subcontractors, and corporations furnishing materials for or performing labor in the prosecution of the work provided for in such contract, and any authorized extension or modification thereof, including all amounts due for materials, lubricants, oil, gasoline, coal and coke consumed, repairs on machinery, equipment and tools, or insurance premiums on said work, and for all labor, performed in such work whether by subcontractor or otherwise, then this obligation shall be void; otherwise to remain in full force and effect.

PROVIDED, FURTHER, that the said surety, for value received hereby stipulates and agrees that no change, extension of time, alteration or addition to the terms of the contract or to the work to be performed thereunder or the specifications accompanying the same shall in any way affect its obligation on this bond, and it does hereby waive notice of any such change, extension of time, alteration or addition to the terms of the contract or to the work or to the specifications.

PROVIDED, FURTHER, that no final settlement between the Owner and the Contractor shall abridge the right of any beneficiary hereunder, whose claim may be unsatisfied.

PROVIDED, FURTHER, that the provisions of Sec. 49-41a of the Connecticut General Statutes are incorporated herein and made a part hereof. Any provision of this bond contrary to such statutory provisions shall not be enforceable.

IN WITNESS, WHEREOF, this instrument is executed in three (3) counterparts, each one of which shall be deemed an original, this the _____ day of _____, 20__.

ATTEST:

_____	_____(S)
(Principal) Secretary	Principal

(SEAL)

_____	By	_____ (S)
Witness as to Principal		Attorney-in-Fact
_____		_____
(Address - Zip Code)		(Address - Zip Code)

ATTEST:

_____	_____
(Surety) Secretary	Surety

(SEAL)

_____	By	_____(S)
Witness as to Surety		Attorney-in-Fact
_____		_____
(Address - Zip Code)		(Address - Zip Code)

NOTE: Date of Bond must not be prior to date of Contract. If Contractor is Partnership, all partners should execute bond.

PERFORMANCE BOND

Bond #_____

KNOW ALL MEN BY THESE PRESENTS:

That we _____
(Name of Contractor)
a _____ hereinafter called "Principal" and
(corporation, partnership or individual)
_____ of _____, State of _____,
(Surety) *(City/Town)*
hereinafter called the "Surety", are held and firmly bound unto _____
(Owner)
of _____, hereinafter called "Owner", in the
(City/Town, State)
penal sum of _____Dollars
($_____) in lawful money of the United States, for the payment of which sum well and truly to be made, we bind ourselves, our heirs, executors, administrators and successors, jointly and severally, firmly by these presents.

THE CONDITION OF THIS OBLIGATION is such that Whereas, the Principal entered in a certain contract with the Owner, dated the _____ day of _____, 20__, a copy of which is hereto attached and made a part hereof for the construction of:

REPLACEMENT OF BRIDGE NO. 07143 QUAKER FARM ROAD OVER HALEYS BROOK

NOW, THEREFORE, if the Principal shall well, truly and faithfully perform its duties, all the undertakings, covenants, terms, conditions, and agreements of said contract during the original term thereof, and any extensions thereof which may be granted by the Owner, with or without notice to the Surety, and if he shall satisfy all claims and demands incurred under such contract, and shall fully indemnify and save harmless the Owner from all costs and damages which it may suffer by reason of failure to do so, and shall reimburse and repay the Owner all outlay and expense which the Owner may incur in making good any default, then this obligation shall be void; otherwise to remain in full force and effect.

PROVIDED, FURTHER, that the said Surety, for such value received hereby stipulates and agrees that no change, extension of time, alteration or addition to the terms of the contract or to the work shall in any way affect its obligation on this bond, and it does hereby waive notice of any such change, extension of time, alteration or addition to the terms of the contract or to the work or to the specifications.

PROVIDED, FURTHER, that no final settlement between the Owner and the Contractor shall abridge the right of any beneficiary hereunder, whose claim may be unsatisfied. IN WITNESS WHEREOF, this instrument is executed in three (3) counterparts, each of which shall be deemed an original, this the _____ day of _____, 20__.

ATTEST:

_____	_____(S)
(Principal) Secretary	Principal
(SEAL)	
_____	By _____ (S)
Witness as to Principal	Attorney-in-Fact
_____	_____
(Address - Zip Code)	(Address - Zip Code)

ATTEST:

_____	_____
(Surety) Secretary	Surety
(SEAL)	
_____	By _____(S)
Witness as to Surety	Attorney-in-Fact
_____	_____
(Address - Zip Code)	(Address - Zip Code)

NOTE: Date of Bond must not be prior to date of Contract. If Contractor is Partnership, all partners should execute Bond.

GENERAL CONDITIONS

1. Insurance Requirements
2. Town Representation
3. Contractor Field Supervision
4. Engineering
5. Contract Drawings, Maps and Specifications
6. Utility Relocation
7. Test Pits
8. Explosives
9. Dust Control
10. Sanitary Facilities
11. Pre-Construction Meeting
12. Construction Meetings
13. Quantities
14. Differing Site Conditions
15. Reports
16. Eliminated Items
17. Work Stoppages
18. Traffic Control
19. Protection of Existing Vegetation, Structures, Equipment, Utilities & Improvements
20. Engineer
21. Progress Payments
22. General Guaranty
23. Daily Clean Up
24. Nondiscrimination
25. Roadway Closings
26. Extra Work
27. Samples
28. Quality of Equipment and Materials
29. Shop or Setting Drawings
30. Plans & Specifications at the Site
31. Materials, Services and Facilities
32. Contractor's Title to Materials
33. Inspection of Construction
34. Inspection and Testing of Materials
35. Contractor's Obligation
36. Weather Conditions
37. Provisions Required by Law Deemed Inserted
38. Right of the Owner to Terminate Contract
39. Acceptance of Final Payment Constitutes Release
40. Assignments
41. Codes, Regulations and Issue Date of Standard Specifications
42. Emergency Telephone Number
43. Other Contracts
44. The Owner's Duties and Rights
45. Wage Rates
46. Contract Bid Breakdown (Lump Sum)
47. Hours of Work
48. Waste Disposal

1. Insurance Requirements

The Contractor must carry insurance under which the Town is an ADDITIONAL INSURED. Such insurance must be by insurance companies licensed to write such insurance in Connecticut against the risks and for no less than the minimum amounts and duration's as set forth in the SUPPLEMENTARY CONDITIONS, Section 1.

2. Town Representation

The Town will be represented at all times by the Director of Public Works or an authorized representative of the Public Works Department. They shall have the responsibility and authority for the interpretation of the Contract, its specifications and drawings.

3. Contractor Field Supervision

The Contractor must have a competent Field Supervisor on the job during all working hours. His name, address and phone number shall be available to the Town for after-hour emergencies.

4. Engineering

All field engineering and inspection shall be provided by the Engineering Division of the Public Works Department and its consultant, SLR. No field changes shall be allowed without specific notification of and approval by the Owner. Any changes will be recorded on prints and initialed by the Construction Observer.

5. Contract Drawings, Maps and Specifications

A. Omissions from the drawings or specifications or the mis-description of details of work which are manifestly necessary to carry out the intent of the drawings and specifications, or which are customarily performed, shall not relieve the Contractor from performing such omitted or mis-described details of the work but they shall be performed as if fully and correctly set forth and described in the drawings and specifications.

B. The Contractor shall check all drawings furnished to him immediately upon their receipt and shall promptly notify the Owner of any discrepancies. Figures marked on drawings shall in general be followed in preference to scale measurements. The Contractor shall compare all drawings and verify the figures before laying out the work and will be responsible for any errors which might have been avoided thereby.

C. Any discrepancies found between the Drawings and Specifications and site conditions or any errors or omissions in the Drawings or Specifications shall be immediately reported to the DIRECTOR OF PUBLIC WORKS in writing, who shall promptly correct such error or omission in writing. Any work done by the CONTRACTOR after his discovery of such discrepancies, errors or omissions without notifying the DIRECTOR OF PUBLIC WORKS shall be done at the CONTRACTOR'S risk.

D. Further instructions may be issued by the DIRECTOR OF PUBLIC WORKS during the progress of the work by means of Drawings or oral or written instruction to make more clear or specific the Drawings and Specifications or as may be necessary to explain or illustrate changes in the work to be done. The CONTRACTOR shall carry out the work in accordance with the additional Drawings and instructions.

6. Utility Relocation

All temporary utility relocations encountered shall be the responsibility of the Contractor and all labor and materials shall be included in his general expense. All permanent utility relocations listed on the drawings or as directed by the Town shall be paid for by the Town.

7. Test Pits

At locations shown on the plans or designated by the Owner, the Contractor shall excavate and expose existing utilities and other structures prior to start of construction. Elevations and locations and other pertinent data of the exposed utilities and other structures are to be recorded and forwarded to the Owner.

8. Explosives

Explosives shall not be used for rock excavation.

9. Dust Control

Calcium Chloride shall be used as directed. Maximum application shall be at a rate one pound per square yard. Water vehicles may also be used as deemed necessary.

The Contractor shall erect temporary dust curtains/walls so that no dust or debris shall enter the adjoining areas.

10. Sanitary Facilities

The Contractor shall provide temporary sanitary facilities for his employees. These facilities shall be cleaned regularly and in all ways comply with the State and Town Health Regulations.

11. Pre-Construction Meeting

The Owner will conduct a pre-construction meeting with the selected Contractor. The purpose of the meeting will be to answer any questions the Contractor may have about scheduling, the scope of work, the methods of work to be applied, and/or other technical or contractual issues.

12. Construction Meetings

To enable orderly review during progress of the Work and to provide for systematic discussion of problems, the Owner will conduct project meetings throughout the

construction period. Persons designated by the Contractor to attend and participate in the project meetings shall have all required authority to commit the Contractor to solutions agreed upon in the project meetings.

13. Quantities

The estimated quantities of work to be done and materials to be furnished under this Contract, are provided only for use in comparing bids and to indicate the approximate total amount of the Contract.

14. Differing Site Conditions

A. The Contractor shall promptly, and before the conditions are disturbed, give a written notice to the Owner of:

1. Subsurface or latent physical conditions at the site which differ materially from those indicated in this contract, or
2. Unknown physical conditions at the site, of an unusual nature, which differ materially from those ordinarily encountered and provided for in the Contract.

B. The Owner shall investigate the site conditions promptly after receiving the notice. If the conditions do materially so differ and cause an increase or decrease in the Contractor's cost of, or the time required for, performing any part of the work under this Contract, whether or not changes as a result of the conditions, an equitable adjustment shall be made under this clause and the contract modified in writing accordingly.

C. No request by the Contractor for an equitable adjustment to the contract under this clause shall be allowed, unless the Contractor has given the written notice required.

D. No request by the Contractor for an equitable adjustment to the Contract for differing site conditions shall be allowed if made after final payment under this contract.

15. Reports

The Contractor and each of his subcontractors shall submit to the Town, such schedules of quantities and costs, progress reports, payrolls, estimates, delivery tickets and other data as the Town may request.

16. Eliminated Items

Should any items contained in the proposal be found unnecessary for the proper completion of the contracted work, or if due to over expenditure on other contract items; the Owner may eliminate certain items from the Contract. Such action shall in no way invalidate the Contract and no allowance will be made for such items in making final payment except for such work already completed or materials previously purchased for those items.

17. Work Stoppages

Should the Town be prevented or enjoined from proceeding with work either before or after the start of construction by reason of any litigation or other reason beyond the control of the Town, the Contractor shall not be entitled to or assert claim for damage by reason of said delay. However, time for completion of the work will be extended to such reasonable time as the Town may determine. Such time extension will be set forth in writing.

18. Traffic Control

The Contractor will furnish and pay for traffic control men to direct and control traffic in the immediate construction area. The Contractor will be responsible for maintenance of adequate barricades, signs, and warning systems to protect the job and the traveling public.

Use of uniformed police or traffic control personnel will in no way relieve the Contractor of his responsibility for traffic accidents caused by his failure to provide adequate barricades, signs and warning devices.

19. Protection of Existing Vegetation, Structures, Equipment, Utilities, and Improvements

A. The Contractor shall preserve and protect all structures, equipment, and vegetation (such as trees, shrubs, and grass) on or adjacent to the work site, which are not to be removed and which do not unreasonably interfere with the work required under this contract. The Contractor shall only remove trees when specifically authorized to do so, and shall avoid damaging vegetation that will remain in place. If any limbs or branches of trees are broken during contract performance, or by the careless operation of equipment, or by workmen, the Contractor shall trim those limbs or branches with a clean cut.

B. The Contractor shall protect from damage all existing improvements and utilities (1) at or near the work site and (2) on adjacent property of a third party, the locations of which are made known to or should be known by the Contractor. The Contractor shall repair any damage to those facilities, including those that are the property of a third party, resulting from failure to comply with the requirements of this contract or failure to exercise reasonable care in performing the work. If the Contractor fails or refuses to repair the damage promptly, the Owner may have the necessary work performed and charge the cost to the Contractor.

20. Engineer

The term "Engineer" shall mean the duly authorized representative of the Public Works Department or its Consultant, SLR.

21. Progress Payments

On the first of each month but not more than once each month, the Contractor may submit a Request for Payment for work done. The CONTRACTOR shall furnish the OWNER all reasonable facilities required for obtaining the necessary information relative

to the progress and execution of the work. He must, if requested by the Owner, submit satisfactory evidence that he has paid in full for all labor, materials, and equipment included in the monthly estimate. The estimates shall be made on forms furnished by the Town and the Contractor shall certify that the estimate is correct and the work performed is in conformity with the plans and specifications.

Within fifteen (15) days from the date of approval of a Request for Payment by the OWNER, the TOWN shall:

A. Pay the Request for Payment as approved less a five percent (5%) retainage.

B. Approve such other amount as he shall decide is due the CONTRACTOR, informing the CONTRACTOR in writing of his reasons for approving the amended amount, or

C. Withhold payment in whole or in part on a approved Request for Payment to the extent necessary to protect itself from loss on account of any of the following causes discovered subsequent to approval of Request for Payment by the OWNER provided he informs the CONTRACTOR in writing of his reasons for withholding payment in whole or in part:

1. Defective work.
2. Evidence indicating the probable filing of claims by other parties against the CONTRACTOR.
3. Failure of the CONTRACTOR to make payments to SUBCONTRACTORS, material suppliers or labor.
4. Damage to another CONTRACTOR.

After completion of the project and acceptance by the Town, the Contractor shall submit an itemized final estimate. No later than six (6) months after acceptance of the final estimate, the Town shall pay the 5% retained, unless, within that time, the materials or workmanship in the project have been found defective. The Contractor agrees that the OWNER may expend the same in making such repairs or replacements of said work as the OWNER may deem expedient upon proper notification in writing to the Contractor.

22. General Guaranty

Neither the final certificate of payment nor any provision in the contract documents, nor partial or entire occupancy of the premises by the Owner, shall constitute an acceptance of work not done in accordance with the contract documents or relieve the Contractor of liability in respect to any express warranties or responsibility for faulty materials or workmanship. The Contractor shall remedy any defects in the work and pay for any damage to other work resulting therefrom. The Owner will give notice of observed defects with reasonable promptness.

23. Daily Clean-Up

Before the completion of each days work, the Contractor shall be responsible for cleaning up and removing or relocating all excavated material, debris, equipment and like and for temporary backfilling or filling excavations as necessary to ensure the continuous flow of traffic in roadways where work is progressing including access to private property during non-working hours.

24. Nondiscrimination

Discrimination is prohibited under this contract.

No person in the United States shall, on the ground of race, color, national origin, or sex, be excluded from participation under any program or activity of a recipient government which government receives funds made available under Subtitle A of the State and Local Fiscal Assistance Act of 1972. Any prohibition against discrimination on the basis of age under the Age Discrimination Act of 1975 (hereinafter referred to as discrimination on the basis of age) or with respect to an otherwise qualified handicapped individual as provided in section 504 of the Rehabilitation Act of 1973, (hereinafter referred to as discrimination on the basis of handicapped status) or any prohibition against discrimination on the basis of religion, as well as any exemption from such prohibition as provided in the Civil Rights Act of 1964 or the Civil Rights Act of 1968 (hereinafter referred to as discrimination on the basis of religion) shall also apply to any such program or activity.

All of subpart E of "Regulations governing the Payment of Entitlements under Title I of the State and Local Fiscal Assistance Act of 1972" as Amended by the State and Local Fiscal Assistance Amendments of 1976 applies.

The Town of Groton does not discriminate against individuals with disabilities as provided in the Americans With Disabilities Act (ADA). The Town expects that the vendors and/or contractors with whom it does business will comply with the American With Disabilities Act to the extent required by law. If awarded a contract with the Town, the successful vendor/contractor will be required to sign a statement agreeing to comply with the provisions of ADA.

25. Roadway Closings

In certain cases where deemed necessary for protection of the public, the Groton Director of Public Works MAY officially close a road to vehicular traffic for a specified period of time. Prior to closing any roads in accordance with this paragraph, detours shall be established by the CONTRACTOR, approved by the OWNER, and suitable signs erected. Access to all homes and business shall be maintained at all times for area residents and emergency vehicles.

26. Extra Work

The Contractor shall be responsible for performing any extra work, as requested by the Owner, made necessary by changes in plan or required to fulfill the scope of the project.

Such work shall be performed by the Contractor at the unit or lump sum price provided in the Contract.

27. Samples

All samples called for in the Specifications or required by the OWNER shall be furnished by the CONTRACTOR at his expense and shall be submitted to the OWNER for his approval. Samples shall be furnished so as not to delay fabrication, allowing the OWNER reasonable time for the consideration of the samples submitted. CONTRACTOR shall furnish such samples of materials, and workmanship shall be in accordance with approved samples.

28. Quality of Equipment and Materials

A. Everything furnished and provided shall be new, and all materials and equipment shall be of the quality specified. All unspecified materials and equipment shall be equal in grade and quality to specified materials. The CONTRACTOR shall furnish satisfactory evidence as to the kind and quality of all materials.

B. In order to establish standards of quality, the OWNER may have, in the detailed Specifications, referred to certain products by name and catalog number. This procedure is not to be construed as eliminating from competition other products of equal or better quality by other manufacturers where fully suitable in design.

C. The CONTRACTOR shall abide by the OWNER'S judgment when proposed substitute materials or items of equipment are judged to be unacceptable and shall furnish the specified materials or items of equipment in such cases. All proposals for substitutions shall be submitted in writing by the General CONTRACTOR and not by individual trades or material suppliers. The OWNER will approve or disapprove proposed substitutions in writing within a reasonable time. No substitute materials shall be used unless approved in writing.

29. Shop or Setting Drawings

The Contractor shall submit promptly to the Owner two copies of each shop or setting drawing prepared in accordance with the schedule predetermined as aforesaid. After examination of such drawings by the Owner and the return thereof, the Contractor shall make such corrections to the drawings as have been indicated and shall furnish the Owner with two corrected copies. If requested by the Owner, the Contractor must furnish additional copies. Regardless of corrections made in, or approval given to, such drawings by the Owner, the Contractor will nevertheless be responsible for the accuracy of such drawings and for their conformity to the Plans and Specifications, unless he notifies the Owner in writing of any deviations at the time he furnishes such drawings.

30. Plans and Specifications at the Site

The Contractor shall maintain at the Work Site, one copy of all Drawings, Specifications, Addenda, approved Shop Drawings, Change Orders and other modifications, Schedules, Instructions, etc. in good order and marked to record all changes made during

construction. These shall be available at all times to the Owner or his authorized representatives.

31. Materials, Services, and Facilities

It is understood that except as otherwise specifically stated in the contract documents, the Contractor shall provide and pay for all materials, labor, tools, equipment, water, light, power, transportation, superintendence, temporary construction of every nature, and all other services and facilities of every nature whatsoever necessary to execute, complete, and deliver the work within the specified time.

32. Contractor's Title to Materials

No materials or supplies for the work shall be purchased by the Contractor or by any Subcontractor subject to any chattel mortgage or under a conditional sale contract or other agreement by which an interest is retained by the seller. The Contractor warrants that he has good title to all materials and supplies used by him in the work, free from all liens, claims or encumbrances.

33. Inspection of Construction

A. Definition: "Work" includes, but is not limited to materials, workmanship, and manufacture and fabrication of components.

B. The Contractor shall maintain an adequate inspection system and perform such inspections as will ensure that the work called for by this contract conforms to contract requirements. The Contractor shall maintain complete inspection records and make them available to the Town. All work is subject to inspection and test at all places and at all reasonable times before acceptance to ensure strict compliance with the terms of the contract.

C. Town inspections and tests are for the sole benefit of the Town and do not:

1. Relieve the Contractor of responsibility for providing adequate quality control measures;
2. Relieve the Contractor of responsibility for damage to or loss of the material before acceptance;
3. Constitute or imply acceptance;

D. The presence or absence of a Town inspector does not relieve the Contractor from any contract requirement, nor is the inspector authorized to change any term or condition of the specification without the Owner's written authorization.

34. Inspection and Testing of Materials

A. All materials and equipment used in the construction of the project shall be subject to adequate inspection and testing in accordance with accepted standards. The laboratory or inspection agency shall be selected by the Owner. The Owner

will pay for all laboratory inspection service direct, and not as a part of the Contract.

B. Materials of construction, particularly those upon which the strength and durability of the structure may depend, shall be subject to inspection and testing to establish conformance with specifications and suitability for uses intended.

35. Contractor's Obligations

The Contractor shall and will, in good workmanlike manner, do and perform all work and furnish all supplies and materials, machinery, equipment, facilities and means, except as herein otherwise specified, necessary or proper.

36. Weather Conditions

In the event of temporary suspension of work, or during the inclement weather, or whenever the Owner shall direct, the Contractor will, and will cause his Subcontractors to protect carefully his and their work and materials against damage or injury from the weather. If, in the opinion of the Owner, any work or materials shall have been damaged or injured by reason of failure on the part of the Contractor or any of his Subcontractors so to protect his work, such materials shall be removed and replaced at the expense of the Contractor.

37. Provisions Required By Law Deemed Inserted

Each and every provision of law and clause required by law to be inserted in this Contract shall be deemed to be inserted herein and the Contract shall be read and enforced as though it were included herein, and if, through mistake or otherwise, any such provision is not inserted, or is not correctly inserted, then upon the application of either party the contract shall forthwith be physically amended to make such insertion or correction.

38. Right of the Owner to Terminate Contract

In the event that any of the provisions of this contract are violated by the Contractor, or by any of his subcontractors, the Owner may serve written notice upon the Contractor and the Surety of its intention to terminate the Contract, such notices to contain the reasons for such intention to terminate the contract, and unless within (10) days after the serving of such notice upon the Contractor, such violation or delay shall cease and satisfactory arrangement of correction to be made, the contract shall, upon the expiration of said ten (10) days, cease and terminate. In the event of any such termination, the Owner shall immediately serve notice thereof upon the Surety and the Contractor and the Surety shall have the right to take over and perform the contract; provided, however, that if the Surety does not commence performance thereof within ten (10) days from the date of the mailing to such Surety of notice of termination, the Owner may take over the work and prosecute the same to completion by contract or by force account for the account and at the expense of the Contractor and the Contractor and his Surety shall be liable to the Owner for any excess cost occasioned the Owner thereby; and in such event the Owner may take possession of and utilize in completing the work, such materials, appliances, and plant as may be on the site of the work and necessary therefore.

In the event of such termination, the OWNER may take possession of the work and of all materials, tools and equipment thereon and may finish the work by whatever method and means he may select. The CONTRACTOR shall consider it default whenever he shall:

C. Declare bankruptcy, become insolvent, or assign his assets for the benefit of his creditors.

D. Disregard or violate important provisions of the Contract Documents or OWNER'S instructions, or fail to prosecute the work according to the agreed Schedule of Completion including extensions thereof.

E. Fail to provide a qualified superintendent, competent workmen or SUBCONTRACTORS, or proper materials, or fail to make prompt payment thereof.

If the right of the CONTRACTOR to proceed is so terminated, the OWNER may take possession of and utilize in completing the work such materials, appliances, supplies, plant and equipment as may be on the site of the work, and necessary therefor. Upon termination of the CONTRACT by the OWNER, no further payments shall be due the CONTRACTOR until the work is completed. If the unpaid balance of the Contract Amount shall exceed the cost of completing the work including all overhead costs and damages resulting from delay, the excess shall be paid to the CONTRACTOR.

If the cost of completing the work shall exceed the unpaid balance, the CONTRACTOR and his sureties shall pay the difference to the OWNER.

39. Acceptance of Final Payment Constitutes Release

The acceptance by the Contractor of final payment shall be and shall operate as a release to the Owner of all claims and all liability to the Contractor for all things done or furnished in connection with his work and for every act and neglect of the Owner and others relating to or arising out of this work. No payment, however, final or otherwise, shall operate to release the Contractor or his sureties from any obligations under this contract or the Performance and Payment Bond.

40. Assignments

The Contractor shall not assign the whole or any part of this contract or any moneys due or to become due hereunder without written consent of the Owner. In case the Contractor, with the consent of the Owner, assigns all or any part of any moneys due or to become due under this contract, the instrument of assignment shall contain a clause substantial to the effect that it is agreed that the right of the assignee in and to any moneys due or to become due to the Contractor shall be subject to prior claims of all persons, firms and corporations of services rendered or materials supplied for the performance of the work called for in this contract.

41. Codes, Regulations and Issue Date of Standard Specifications

Where standard specifications, codes, regulations and similar publications of governmental agencies, technical societies, manufacturer's associations and regulatory groups or bureaus are referred to in these Specifications, the applicable portion thereof shall be of the same effect as if fully printed herein, and the work done in full accordance therewith. The edition current as of the date of issue of this Specification shall be used except where publication date is specifically stated.

42. Emergency Telephone Number

The CONTRACTOR is required to provide the OWNER with a telephone number, which can be used during emergencies, 24 hours per day, seven days per week, to reach the CONTRACTOR.

43. Other Contracts

The Town may undertake or award other contracts for additional work at or near the site of the work under this contract. The Contractor shall fully cooperate with the other contractors and with Town employees and shall carefully adapt scheduling and performing the work under this contract to accommodate the additional work, heeding any direction that may be provided by the Owner. The Contractor shall not commit or permit any action that will interfere with the performance of work by any other contractor or by Town employees.

44. The Owner's Duties and Rights

A. The OWNER will provide the lands shown on the Drawings upon which the work under the CONTRACT is to be performed and to be used for rights-of-way for access. Any delay in furnishing these lands by the OWNER shall be deemed proper cause for adjustment in the Contract Amount and in time of completion.

B. The OWNER shall have the right to suspend the work or any portion thereof at any time provided that he gives the CONTRACTOR five (5) days written notice of suspension which shall set forth the date on which work is to be resumed. The CONTRACTOR shall resume the work upon written notice from the OWNER and within ten (10) days after the date set forth in the notice of suspension. If the OWNER does not give written notice to resume work within ten (10) days of the date fixed in the notice of suspension, the CONTRACTOR may abandon that portion of the work so suspended and shall be entitled to payment for all work done on the portions so abandoned, plus 15 percent of the value of the abandoned work to compensate for overhead, plant expense, and anticipated profit.

C. The OWNER shall have the authority to suspend the work, wholly or in part, for such period or periods, as may be deemed necessary, due to unsuitable weather, or such other conditions as are considered unfavorable for prosecution of the work, or failure on the part of the CONTRACTOR to carry out the provisions of the CONTRACT or to supply materials meeting the requirements of the

Specifications. The CONTRACTOR shall not suspend operations due to unsuitable weather without the OWNER'S permission.

D. The OWNER shall have the right to correct any deficiencies, without prejudice to any other remedy he may have, upon failure of the CONTRACTOR to perform the work in accordance with the Contract Documents, including any requirements with respect to the Schedule of Completion, after five (5) days written notice to the CONTRACTOR. The cost of the work so performed by the OWNER shall be paid for by the CONTRACTOR.

E. The OWNER shall have the authority to direct the CONTRACTOR not to correct work that has been damaged, or that was not performed in accordance with the Contract Documents. An equitable deduction from the Contract Amount shall be made to compensate the OWNER for the uncorrected work.

F. The OWNER shall have the right to order changes in the work through additions, deletions or modifications without invalidating the CONTRACT.

G. The OWNER shall have the right to take possession of and use any completed or partially completed portions of the work, not withstanding that the time for completing the entire work or such portions may not have expired; but such taking possession and use shall not be deemed an acceptance of any work not completed in accordance with the Contract Documents. If such prior use increases the cost of or delays the completion of uncompleted work or causes refinishing of completed work, the CONTRACTOR shall be entitled to such extra compensation, or extension of time or both, as the OWNER may determine.

45. Wage Rates

Notice is given that Section 31-53 of the State Statutes, as amended, may apply to this Contract. The provisions of this section shall not apply where the total cost of all work to be performed by contractors and subcontractors in connection with new construction of any public works project is less than one million dollars ($1,000,000.00) or where the total cost of all work to be performed by contractors and subcontractors in connection with any remodeling, refinishing, refurbishing, rehabilitation, alteration or repair of any public works project is less than one hundred thousand dollars ($100,000.00). Upon the award of any contract subject to the provisions of this act, the contractor to whom such contract is awarded shall certify, under oath, to the Labor Commissioner the pay scale to be used by such contractor and any of his subcontractors for work to be performed under such contract.

The wages paid on an hourly basis to any person performing the work of any mechanic, laborer or worker on the work herein contracted to be done and the amount of payment or contribution paid or payable on behalf of each such person to any employee welfare fund, as defined in subsection (i) of this section, shall be at a rate equal to the rate customary or prevailing for the same work in the same trade or occupation in the town in which such public works project is being constructed. Any contractor who is not obligated by agreement to make payment or contribution on behalf of such persons to any such employee welfare fund shall pay to each mechanic, laborer or worker as part of such

person's wages the amount of payment or contribution for such person's classification on each pay day.

The wage rates have been determined by the State Labor Department and the contractor in payment of wage shall be bound by such schedules in the performance of the work herein provided.

In accordance with Public Act 93-392, the Contractor shall submit weekly to the Town a certified payroll (Forms WWS-CP1 and CP2) accompanied by a Statement of Compliance. Samples of these forms are included with the wage rates.

In compliance with section 31-53b of State Statutes, as amended, the contractor shall furnish proof with the weekly certified payroll form for the first week each employee begins work on this project that any person performing the work of a mechanic, laborer or worker pursuant to the classifications of labor under section 31-53 of the State Statues on this project, pursuant to this contract, has completed a course of at least ten hours in duration in construction safety and health approved by the federal Occupational Safety and Health Administration, and that any plumber or electrician subject to the continuing education requirements of section 20-334d of the State Statutes, who has completed a course of at least ten hours in duration in construction safety and health approved by the federal Occupational Safety and Health Administration five or more years prior to the date such electrician or plumber begins work on such public works project, has completed a supplemental refresher training course of at least four hours in duration in construction safety and health taught by a Federal Occupational Safety and Health Administration authorized trainer.

In accordance with Public Act 02-69, the contractor shall contact the Labor Commissioner on or before July first of each year for the duration of this contract, to ascertain the prevailing rate of wages on an hourly basis and the amount of payment or contributions paid or payable on behalf of each mechanic, laborer or worker employed upon the work contracted to be done, and shall make any necessary adjustments to such prevailing rate of wages and such payment or contributions paid or payable on behalf of each such employee, effective each July first.

The annual adjustments will be posted on Department of Labor Web page: www . ctdol. state . ct . us. For those without internet access, please contact the Department of Labor

46. Contract Bid Breakdown (Lump Sum)

The Contractor shall furnish a breakdown of each lump sum bid within 10 days after date of award of contract. Partial payments will be based on this breakdown. The Contractor's breakdown will be reviewed by the OWNER to ensure that costs are proportioned properly between early and late pay items. Any unbalanced items or other discrepancies will be revised by the OWNER and the approved breakdown will be utilized as a basis for progress payment to the Contractor.

47. Hours of Work

A. Normal Business Hours

The contractor shall perform all work during normal business hours, **defined as 7:30 AM to 4:30 PM, Monday through Friday**, excluding recognized holidays.

B. Exclusion of Holidays and Weekends

The Contractor shall not be required to perform any work on weekends (Saturday and Sunday) or recognized public holidays. Recognized public holidays include but are not limited to:

New Year's Day	Labor Day
Martin Luther King, Jr. Day	Columbus Day
President's Day	Veteran's day
Good Friday	Thanksgiving
Memorial Day	Day After Thanksgiving
Juneteenth	Christmas Eve
Independence Day	Christmas Day

Should work be required outside of normal business hours or on holidays/weekends, such work shall require prior written approval from the OWNER.

C. Scheduling of Work

The contractor shall schedule all work within normal business hours unless otherwise agreed upon in writing. Any work performed outside of these hours shall be subject to special terms and conditions agreed upon by both parties. The OWNER reserves the right to decline a Contractor's request to work outside normal business hours based upon availability of inspection services, or for any other reason. Such work outside normal business hours shall be performed without additional expense to the OWNER.

48. Waste Disposal

The Contractor shall be responsible for the cost and legal disposal of all construction debris, municipal solid waste, stumps, and excess materials.

The Contractor shall legally dispose of any hazardous materials at approved sites at his own expense.

END OF SECTION

SUPPLEMENTARY CONDITIONS

1. Insurance Requirements
2. Worker's Compensation Provision
3. Indemnification
4. Enumeration of Contract Drawings, Specifications, Appendices and Addenda
5. Lock-Out Tag-Out Standard
6. Hazard Communication

1. Insurance Requirements

Insurance shall be written with carriers approved in the State of Connecticut and with a minimum AM Best's Rating of "A-"VIII. In addition, all carriers are subject to approval by the Town of Groton and no coverage shall contain special limitations on the scope of protection afforded to the Town, its officers, officials, employees or volunteers. The Town of Groton shall be named as an Additional Insured on a primary and non-contributory basis to all policies except Workers Compensation. All policies shall include a waiver of subrogation.

General Liability		(Minimum Limits)
	Each Occurrence	$1,000,000
	General Aggregate	$3,000,000
	Products/Completed operations Aggregate	$3,000,000
	-Policy must contain no exclusion for Explosion. Collapse and underground Hazard (XC & U)	
	-Contractor must notify the Town whenever claims Reduce the General Aggregate below $1,000,000	
	-The Town should be notified if the Aggregate limits Include defense costs	
Auto Liability	Combined Single Limit Each Accident	$1,000,000
Umbrella (Excess Liability)	Each Occurrence	$1,000,000
	Aggregate	$1,000,000
Workers Compensation		WC Statutory Limits
Employers Liability	EL Each Accident	$1,000,000
	EL Disease Each Employee	$1,000,000
	EL Disease Policy Limit	$1,000,000

For Contractors:

(Should a Contractor be involved in operations requiring coverage under special State or Federal Acts Such as Maritime or Railroad, the Contractor must provide evidence of this coverage. Should a Contractor be exempt from the Workers Compensation Laws of the State of Connecticut, or any other State or Federal requirements, evidence of such exemption must be provided and a "Hold-Harmless" agreement provided in language satisfactory to the Town, holding it harmless in the event of any claim for injury or damages. Contractors based out-of-state must provide evidence that their Workers Compensation policy will cover injuries/illness sustained while working in the State of Connecticut. The Contractor is responsible for ensuring that all of its subcontractors carry Workers Compensation Insurance, as described above.
If any policy is written on a "Claims Made" basis, the policy must be continually renewed for a minimum of three (3) years from the completion date of this contract. If the policy is replaced and/or the retroactive date is changed, then the expiring policy must be endorsed to extend the

reporting period for claims for the policy in effect during the contract for three (3) years from completion date. Original, completed Certificates of Insurance must be presented to the Town of Groton Public Works prior to purchase order/contract issuance. Contractor agrees to provide replacements/renewal certificates at least 60 days prior to the expiration of any policy. Should any of the above described policies be cancelled before the expiration date, written notice must be made to the Town thirty (30) days prior to cancellation).

2. Worker's Compensation Provision

Before entering into the contract for the project, the successful bidder must comply with all aspects of State Statute 31-286a, including providing the Town with a current statement from the State Treasurer that, to the best of his knowledge and belief as of the date of the statement, the Contractor or any of his Subcontractors was not liable to the State for any Worker's Compensation payments made pursuant to Section 31-355 of the General Statutes.

Contract documents will not be signed until the statement has been received by the Town from the State Treasurer.

3. Indemnification

The Contractor will indemnify and hold harmless the Owner (Town of Groton) and the Engineer and their agents and employees from and against all claims, damages, losses and expenses including attorney's fees arising out of or resulting from the performance of the work, provided that any such claims, damage, loss or expense is attributable to bodily injury, sickness, disease or death, or to injury to or destruction of tangible property including the loss of use resulting therefrom. The Contractor, subcontractor, anyone directly or indirectly employed by any of them or anyone for whose acts any of them may be liable will be held responsible for any type of pollution and/or environmental impairment into or upon land, the atmosphere or any course or body of water that is above or below ground; and is caused in whole or in part by any negligent or willful or wanton act or omission of any of the above stated individuals or group of individuals. The Contractor, Subcontractor, anyone directly or indirectly employed by any of them or anyone for whose acts any of them may be liable will be held responsible for acts that are outside of the contract specifications and without the supervision or direction of the Town, its architects, and engineers. These same individuals or group of individuals will also be held responsible for the misuse or malfunction of any equipment rented, owned or leased by any of these individuals or groups of individuals that would create any type of pollution or environmental damage.

The owner assumes no responsibility or liability arising from loss or damage to Contractor's equipment, materials or supplies.

4. Enumeration of Contract Drawing, Specifications, Appendices and Addenda

The following are the contract drawings, specifications, appendices and addenda which form a part of this contract as set forth in paragraph 5 of the General Conditions.

Specifications

Specifications and Bid Form for "REPLACEMENT OF BRIDGE NO. 07143 QUAKER FARM ROAD OVER HALEYS BROOK"
Information for Bidders
Bid Proposal
General Conditions
Supplementary Conditions
Technical Specifications
Permits and Required Provisions

Plans

"REPLACEMENT OF BRIDGE NO. 07143 QUAKER FARM ROAD OVER HALEYS BROOK" prepared by "SLR International Corporation", sheets:

1. Title Sheet
2. Notes & Legend
3. Existing Conditions & Baseline Information
4. Removals Plan
5. Roadway Plan
6. Roadway & Channel Profile
7. Rights-of-Way Plan
8. Sediment & Erosion Control Plan
9. Restoration Plan
10. Bridge Plan, Elevation & Typical Section
11. Boring Logs
12. Substructure Plans & Details
13. Substructure Plans & Details
14. Substructure Plans & Details
15. Substructure Plans & Details
16. Drilled Shaft Details
17. Deck Plan
18. Framing Plan
19. Prestressed Deck Unit Details
20. Superstructure Plans & Details
21. Bridge Railing Details
22. Bridge Railing Details
23. Bridge Railing Details
24. Staged Construction Plans
25. Staged Construction Plans
26. Roadway Cross Sections
27. Roadway Cross Sections
28. Roadway Cross Sections

5. Lock-Out Tag-Out Standard

The Town of Groton requires that any Contractor that maintains or is hired to work on any Town equipment, abide by the OSHA "Lock-Out Tag-Out" standard. The Contractor must provide his workers with locks, hasps and keys approved by OSHA for the proper locking and tagging out of equipment from its power source according to the OSHA

standard. The Town of Groton is not responsible for providing the Contractor with the locks and hasps. The Contractor is responsible for complying with this standard and assuring that all of his employees comply with it while working on Town of Groton equipment. The Town requires that any Contractor's equipment brought on to Town property by the Contractor be properly locked or tagged out from its power source in accordance with the OSHA standard.

6. Hazard Communication

The Town of Groton requires that any vendor or Contractor using hazardous materials, or any material that would fall under the OSHA "Right to Know" standard, provide a list to the Town of Groton of those materials that will be used while on Town property, as well as the material safety data sheets for those products. Conversely, the Town of Groton shall inform the Contractor of where the "Employee Right to Know" station is in the area where they are working so that the Contractor's employees can be aware of any substances that they may encounter while working within the Town of Groton workplace.

END OF SECTION

TECHNICAL SPECIFICATIONS

TOWN OF GROTON, CONNECTICUT
REPLACEMENT OF BRIDGE NO. 07143
QUAKER FARM ROAD OVER HALEYS BROOK
CONTRACT NO. 26-08

INDEX TO SPECIAL PROVISIONS

Items numbers and Sections listed in this index correspond to the applicable Standard Specification sections. Items with an "A" designation have supplemental information prescribed in these Special Provisions. Items without this designation shall be referenced to the appropriate Section in the Standard Specifications. This list may not be inclusive of all references to the Standard Specification. It is intended that the Standard Specification shall apply to all work defined in the Contract Documents.

1. **MOBILIZATION AND DEMOBILIZATION**
   Section 9.75 Mobilization and Project Closeout
   - 0975004 - Mobilization and Project Closeout

2. **CONSTRUCTION SURVEYING**
   Section 9.80 Construction Surveying
   - 0980020 - Construction Surveying

3. **REMOVALS AND SITE PREPARATION**
   Section 2.01 Clearing and Grubbing
   - 0201001 - Clearing and Grubbing

   Section 9.12 Remove and Reset Posts, Rail and Rail Anchorages
   - 0912504 - Remove Two Cable Guide Railing

   0503866A Removal of Existing Culvert (Site No. 1)
   1206023A Removal and Relocation of Existing Signs

4. **SEDIMENT & EROSION CONTROL**
   Section 2.19 Sedimentation Control System
   - 0219001 - Sedimentation Control System

5. **HANDLING WATER**
   Section 2.04 Cofferdam and Dewatering, Cofferdam Material Left in Place
   - 0204001 - Cofferdam and Dewatering

   0204151A Handling Water

6. **ROADWAY**
   Section 2.02 Roadway Excavation, Formation of Embankment and Disposal of Surplus Material
   - 0202000 - Earth Excavation
   - 0202529 - Cut Bituminous Concrete Pavement

   Section 2.09 Subgrade
   - 0209001 - Formation of Subgrade

Section 2.12 Subbase
- 0212000 - Subbase

Section 3.04 Processed Aggregate Base
- 0304002 - Processed Aggregate Base

Section 3.05 Processed Aggregate
- 0305000 - Processed Aggregate

Section 4.06 Bituminous Concrete
- 0406171 - HMA S0.5
- 0406173 - HMA S0.25
- 0406238 - Non-Tracking Asphalt Tack Coat

Section 12.10 Epoxy Resin Pavement Markings
- 1210102 – 4" Yellow Epoxy Resin Pavement Markings

0406194A Joint and Crack Sealing of Bituminous Concrete Pavement
0406303A Sawing and Sealing Joints
0406312A Gutter Line Sealing for Bridges

7. CHANNEL RECONSTRUCTION

0202216A Excavation and Reuse of Existing Channel Bottom Material
0202217A Supplemental Streambed Material
0202218A Washing-In Supplemental Streambed Material
0703014A Rounded Riprap

8. BRIDGE SUBSTRUCTURE

Section 2.03 Structure Excavation
- 0203202 Structure Excavation - Earth (Excluding Cofferdam and Dewatering)

Section 2.16 Pervious Structure Backfill
- 0216000 - Pervious Structure Backfill

Section 6.01 Concrete for Structures
- 0601064 - Abutment and Wall Concrete
- 0601066 - Column and Cap Concrete
- 0601504 - 1" Preformed Expansion Joint Filler for Bridges
- 0601640 - 1" Closed Cell Elastomer

Section 6.02 Reinforcing Steel
- 0602030 – Deformed Steel Bars - Galvanized

Section 7.08 Dampproofing
- 0708001 - Dampproofing

0728032A No. 6 Crushed Stone

9. DRILLED SHAFTS

Section 7.01 Drilled Shafts
- 0701071 - Drilled Shaft (2.5ft)
- 0701073 - Drilled Shaft Earth Excavation (2.5 ft)
- 0701099 - Furnishing Drilled Shaft Equipment
- 0701261 - Drilled Shaft Rock Excavation (2.5 ft)

0702771A Integrity Testing - Reflection

10. OBSTRUCTIONS

Section 7.01 Drilled Shafts

- 0701190 - Obstructions

11. BRIDGE SUPERSTRUCTURE

Section 5.14 Prefabricated Concrete Structural Components

- 0514201 - Prestressed Deck Units (3'-0"x1'-0")
- 0514217 - Prestressed Deck Units (4'-0"x1'-0")

Section 5.21 Elastomeric Bearing Pads

- 0521001 - Elastomeric Bearing Pads

Section 6.01 Concrete for Structures

- 0601062 - Footing Concrete
- 0601118 - Bridge Deck Concrete
- 0601123 - Approach Slab Concrete
- 0601124 - Barrier Wall Concrete

Section 6.02 Reinforcing Steel

- 0602030 – Deformed Steel Bars - Galvanized

0521021A Steel-Laminated Elastomeric Bearings
0601091A Simulated Stone Masonry
0707009A Membrane Waterproofing (Cold Liquid Elastomeric)
0728032A No. 6 Crushed Stone
0819002A Penetrating Sealer Protective Compound

12. BRIDGE RAIL & GUIDERAIL SYSTEM

0904303A Metal Bridge Rail – Three Rail (Traffic)
0910173A R-B 350 Bridge Attachment – Vertical Shape Parapet
0910300A Metal Beam Rail (R-B MASH)
0911923A R-B End Anchorage – Type I
0911924A R-B End Anchorage – Type II

13. SITE RESTORATION

Section 9.44 Topsoil

- 0944000 – Furnishing and Placing Topsoil

Section 9.49 Furnishing, Planting and Mulching Trees, Shrubs, Vines and Ground cover Plants

- 0949000 - Wood Chip Mulch
- 0949060 - Aronia Melanocarpa, Black Chokeberry, 3'-4' HT. B.B.
- 0949076 - Iris Versicolor, Blue Flag Iris, 2" Peat Pot
- 0949087 - Clethra Alnifolia, Summersweet 3'-4' HT. B.B.
- 0949188 - Pontederia Cordata, Pickerel Weed 2" Plug.
- 0949215 - Acorus americanus, Sweetflag, 2" Plug
- 0949309 - Lyonia Ligustrina, Maleberry 3'-4' HT. B.B.
- 0949550 - Cephalanthus Occidentalis, Buttonbush 3'-4' HT. B.B.

- 0949816 - Alnus Incana, Speckled Alder 3'-4' H.T. B.B.

Section 9.50 Turf Establishment, Erosion Control Matting

- 0950013 - Erosion Control Matting

Section 12.08 Sign Face – Sheet Aluminum

- 1208931 - Sign Face – Sheet Aluminum (Type IX Retroreflective Sheeting)
- 1208937 - Sign Face – Sheet Aluminum (Type XI Retroreflective Sheeting)

0950040A Conservation Seeding for Slopes

14. MAINTENANCE & PROTECTION OF TRAFFIC

Section 8.22 Temporary Traffic Barrier

- 0822100.01 - Temporary Traffic Barrier

Section 12.20 Construction Signs

- 1220027 - Construction Signs

0971001A Maintenance and Protection of Traffic

STATE PROJECT NO. 9058-0015

REPLACEMENT OF BRIDGE NO. 07143
QUAKER FARM ROAD OVER HALEYS BROOK

Town of Groton

The State of Connecticut, Department of Transportation, Standard Specifications for Roads, Bridges, Facilities and Incidental Construction, Form 819, dated 2024, including Supplemental Specifications, dated January 2025, is hereby made part of this contract, as modified by the Special Provisions contained herein. The current edition of the State of Connecticut Department of Transportation's "Construction Contract Bidding and Award Manual" ("Manual") is hereby made part of this contract. If the provisions of this Manual conflict with provisions of other Department documents (not including statutes or regulations), the provisions of the Manual will govern. The Special Provisions relate in particular to the
in the Town of Groton.

NOTICE TO CONTRACTOR - FEDERAL WAGE DETERMINATIONS (Davis Bacon Act)

The following Federal Wage Determinations are applicable to this Federal- Aid contract and are hereby incorporated by reference. During the bid advertisement period, it is the bidder's responsibility to obtain the latest Federal wage rates from the US Department of Labor website, as may be revised 10 days prior to bid opening. Any revisions posted 10 days prior to the bid opening shall be the wage determinations assigned to this contract.

Check Applicable WD# (DOT Use Only)	WD#	Construction Type	Counties
	CT1	Highway	Fairfield, Litchfield, Middlesex, New Haven, Tolland, Windham
X	CT2	Highway	New London
	CT3	Highway	Hartford
	CT5	Heavy Dredging (Hopper Dredging)	Fairfield, Middlesex, New Haven, New London
	CT6	Heavy Dredging	Statewide
	CT13	Heavy	Fairfield
	CT14	Heavy	Hartford
	CT15	Heavy	Middlesex, Tolland
	CT16	Heavy	New Haven
	CT17	Heavy	New London
	CT26	Heavy	Litchfield, Windham
	CT18	Building	Litchfield
	CT19	Building	Windham
	CT20	Building	Fairfield
	CT21	Building	Hartford
	CT22	Building	Middlesex
	CT23	Building	New Haven
	CT24	Building	New London
	CT25	Building	Tolland
	CT4	Residential	Litchfield, Windham
	CT7	Residential	Fairfield
	CT8	Residential	Hartford
	CT9	Residential	Middlesex
	CT10	Residential	New Haven
	CT11	Residential	New London
	CT12	Residential	Tolland

The Federal wage rates (Davis-Bacon Act) applicable to this Contract shall be the Federal wage rates that are current on the US Department of Labor website (SAM.gov | Wage Determinations) as may be revised 10 days prior to bid opening. The Department will no longer physically include revised Federal wage rates in the bid documents or as part of addenda documents. These

applicable Federal wage rates will be incorporated in the final contract document executed by both parties.

If a conflict exists between the Federal and State wage rates, the higher rate shall govern.

To obtain the latest Federal wage rates, go to the US Department of Labor website (link above). Under Davis-Bacon Act, choose "Selecting DBA WDs" and follow the instruction to search the latest wage rates for the State, County and Construction Type.

NOTICE TO CONTRACTOR – PREQUALIFICATION REQUIREMENT

Prospective bidders must have a current sworn Statement (CON-16) on file with the Connecticut Department of Transportation and be prequalified to perform Group No. 8 (Minor Bridges) work. The Bidder's Prequalification approval letter signed by the CTDOT Contracts Manager shall be included as a part of the bid package submitted to the Municipality.

NOTICE TO CONTRACTOR – UTILITY COORDINATION

The Contractor is hereby notified of the following utilities that are affected by the project. This notice does not relieve the Contractor of their responsibility to locate and safely work adjacent to all utilities located within the project limits.

- Temporary relocation of the existing aerial facilities is anticipated.
- Call Before You Dig must be contacted by the Contractor prior to performing any work.
- Tree clearing, if any, needed for the relocation of utilities after the Notice to Proceed shall be included in the item Clearing and Grubbing.

NOTICE TO CONTRACTOR – PROTECTION OF EXISTING UTILITIES

Existing utilities shall be protected and maintained during construction except as specifically stated herein and/or noted on the plans and as coordinated with the utilities. The Contractor shall verify the location of underground, structure mounted, and overhead utilities. Construction work within the vicinity of utilities shall be performed in accordance with current safety regulations. The Contractor shall notify "Call Before You Dig", by dialing 811 or going to www.cbyd.com for the location of public utility prior to the beginning of any excavation, in accordance with State regulations.

Coordination with public and private utility custodians/owners will be required at the onset of construction. The Contractor will be required to reset any affected all manhole covers and utility valve/gate boxes encountered within the limits of the work as required. There will be no separate payment for this work.

Representatives of the various utility companies shall be provided access to the work, by the Contractor.

Contractors are cautioned that it is their responsibility to verify locations, conditions, and field dimensions of all existing features, as actual conditions may differ from the information shown on the plans or contained elsewhere in the specifications.

The Contractor shall notify the Engineer prior to the start of work and shall be responsible for all coordination with the Town. The Contractor shall allow the Engineer complete access to the work.

The Contractor shall be liable for all damages or claims received or sustained by any persons, corporations or property in consequence of damage to the existing utilities, their appurtenances, or other facilities caused directly or indirectly by the operations of the Contractor.

Any damage to any existing private and public utility, as a result of the Contractors operations, shall be repaired to the utilities and Engineer's satisfaction at no cost to the Town or the Utilities, including all materials, labor, etc., required to complete the repairs.

The Contractor's attention is directed to the requirements of Section 1.07.13, Form 816 – "Contractor's Responsibilities for Adjacent Property Facilities and Services".

Prior to opening an excavation, effort shall be made to determine whether underground installations, i.e., water, sanitary, gas, electric ducts, communication ducts, etc., will be encountered and, if so, where such underground installations are located. When the excavation approaches the estimated location of such an installation, the exact location shall be determined by careful probing or hand digging, and when it is uncovered, proper supports shall be provided for the existing installation. Utility companies shall be contacted and advised of proposed work prior to the start of actual excavation, as noted above.

Overhead Utilities

Overhead electric, telephone and cable services span the project area. The contractor is hereby warned that overhead utilities may conflict with construction activities. The contractor shall maintain sufficient clearance from overhead wires in accordance with applicable laws and regulations. The contractor shall establish contact with the utilities prior to starting the work and shall maintain regular communication with the utilities throughout the course of the work. The contractor will be responsible for coordination associated with temporary support and/or relocation of existing utilities as may be necessary to accomplish the work. Utility coordination meetings were conducted during the design phase.

NOTICE TO CONTRACTOR – PERMITS/PERMIT APPLICATIONS

The Contractor is hereby notified that all permit approvals and permit applications (contained elsewhere in these specifications) shall be made a part of this Contract, and that the Contractor shall be bound to comply with all requirements of such permits and permit applications as though the Contractor were the permittee. If at the time the permit is received its contents differ from that which is outlined in the application, the permit shall govern.

Should the permit be received after the receipt of bids and the permit requirements

significantly change the character of the work, adjustment will be made to the contract in accordance with the appropriate articles in Section 1.04. The requirements and conditions set forth in the permit and permit application shall be binding on the Contractor just as any other specification would be. In the case of a conflict between a provision of the environmental permit or permit application and another provision in the contract documents, the former shall govern.

NOTICE TO CONTRACTOR – FLOOD CONTINGENCY PLAN REQUIREMENTS

The Contractor is hereby made aware that under "Article 1.10.03 – Water Pollution Control" of Form 819, as amended by the Supplemental Specifications, the Contractor is required to submit a contingency plan for flood events, in writing, to the Municipality or its authorized agent for approval. The contingency plan must be submitted by the Contractor and approved by the Municipality or its authorized agent prior to the commencement of any Project construction in the waterway.

NOTICE TO CONTRACTOR – EXAMINATION OF PLANS, SPECIFICATIONS & SITE OF WORK

The bidder is required to examine carefully the site of work and the Contract documents including proposal form, plans, special provisions, specifications, supplemental specifications, Contract forms and other Contract documents for the work contemplated and shall request in writing prior to the bid any clarifications that it deems necessary to prepare its bid. It will be assumed that the bidder has judged for and satisfied itself as to the conditions to be encountered at the site, as to the completeness and requirements of the contract plans and specifications, as to the character, quality and quantities of the work to be performed and materials to be furnished for said work, and as to the requirements of the above contract documents, and in particular, but not limited to, what is required under each Contract item, or under the general cost of the work, or under another or more general Contract item in the absence of particular items. Therefore, while clarifications regarding the Contract documents should be expected from time to time during prosecution of the work and unless these clarifications substantially change the scope of the work, in submitting its bid the bidder shall relinquish any claim to additional compensation or time based upon these clarifications of the Contract documents or a misunderstanding or lack of knowledge of the site conditions, the work required or the method of work required.

The subsurface information furnished is based on interpretation of investigations made only at the specific locations indicated, and no assurance is given that these conditions are necessarily typical of other locations or that they have remained unchanged since the field data were obtained. No assurance is given that the presence or absence of water in subsurface explorations at the time of these explorations will be representative of actual conditions at the time of construction. The contractor shall be solely responsible for all assumptions, deductions, or conclusions it may make or derive from its examination of any subsurface information or document provided. The furnishing or making available such information does not provide or make any warranty or representation as to the actual conditions that may be encountered or actual quantities or distribution of quantities of work which will be required.

NOTICE TO CONTRACTOR – BIDDER'S OBLICATIONS REGARDING DISCOVERY OF AN ERROR IN THE CONTRACT DOCUMENTS

Any bidder that discovers an error in the bid proposal or contract documents, including but not limited to the plans, must report that error in writing prior to the bid and within two (2) business days of discovering the error. A failure to do so may result in finding the contractor to be non-responsible as the low bidder.

NOTICE TO CONTRACTOR – PROCUREMENT OF MATERIALS

Upon award, the Contractor shall proceed with shop drawings, working drawings, procurement of materials, and all other submittals required to complete the work in accordance with the contract documents.

SECTION 1.01 – DEFINITIONS OF TERMS AND PERMISSIBLE ABBREVIATIONS

1.01.01 – Definitions: is amended and supplemented as follows:

Substitute the word "Municipality" or "Municipal" for "Department" wherever "Department" appears in the definitions for each of the following terms: Award, Contract, Highway, Plans, and Project.

Substitute the word "Engineer" for "Commissioner" wherever "Commissioner" appears in the definitions for each of the following terms: Subcontractor and Sub-subcontractor.

Engineer: Delete the definition in its entirety and replace with the following:

The Municipality's Town Manager, acting directly or through a duly authorized representative.

Add the following:

Municipal: Of or relating to the Municipality.

Municipal Liaison: That individual identified by the Municipality to act as liaison with the State of Connecticut, Department of Transportation.

Municipality: Town of Groton, Connecticut

SECTION 1.02 – PROPOSAL REQUIREMENTS AND CONDITIONS

Section 1.02 is supplemented and amended as follows:

Throughout this Section, make the following substitutions for all occurrences of the word(s) identified below for substitution:

Substitute "Engineer" for "Commissioner" and for "Division of Contracts."
Substitute "Municipality" or "Municipal" for "Department" and for "Contract Section".

1.02.01—Contract Bidding and Awards: is amended as follows:

Add the following two (2) paragraphs to the end of the existing paragraph.

Should the Municipality NOT allow electronically submitted bids, then each paper bid proposal must be submitted in a sealed envelope large enough to hold the proposal documents (recommended size 10-1/2 x 13). **The envelope must clearly state the name and address of the firm submitting the bid, the name of the Town and Project Number for the bid.** The envelope must be delivered to the Municipality on or before the hour and date, and to the location, set forth in the bid advertisement for the opening of proposals, unless the bidder is otherwise directed.

On the date and at the time and place designated in the bid advertisement and in the related Notice to Contractors or addendum notice, the sealed paper bid proposals shall be publicly opened and read out loud. At the time that paper bid proposal is opened, it shall be checked for "responsiveness" in various respects, to determine if it complies with applicable statutes, regulations, and the Municipality's Specifications, including Connecticut DOT's Standard Specifications. Each bidder is required to include with its paper bid proposal the following documents: the completed paper bid proposal form (incl. the schedule of prices), the required bid bond, a non-collusion affidavit, and any other information required by the bid documents or by the bid advertisement. Each paper bid proposal shall be governed by the terms and conditions, as applicable, that are stipulated in the Connecticut DOT's Construction Bidding and Award Manual, for electronically submitted bids.

Add the sentence below following the end of the last paragraph;

Prequalification by the State of Connecticut Department of Transportation is required for this project. The bidder's prequalification approval letter signed by the CTDOT Contracts Manager shall be included as part of the bid package submitted to the Municipality.

1.02.04—Examination of Plans, Specifications, Special Provisions, and Site of Work:
Delete the last paragraph and replace with the following:

"Bidders must inform the Municipality's Designer, at the earliest opportunity, in writing, of any

and all omissions, errors, and/or discrepancies that the bidder discovers within or among the plans, specifications, and bidding documents. Information and inquiries concerning such matters, and any other information or inquiry concerning the conditions of bidding or award or the interpretation of contract documents must be transmitted in writing to:

Shelley Plude, MS, PE
Principal Structural Engineer, Bridge Design Lead
SLR International Corporation
99 Realty Drive
Cheshire, CT 06410
splude@slrconsulting.com
(475) 244-2306

The Municipality and/or the Municipality's Designer cannot ensure a response to inquiries received later than ten (10) days prior to the scheduled bid opening of the related bid. When deemed warranted by the Municipality and/or the Municipality's Designer, responses to such inquiries that relate to changes in or interpretations of the Project documents (plans and specifications) will be issued to all bidders in the form of addenda and made a part of the Contract. Bidders are responsible for ensuring that they are aware of all addenda. Failure by the Municipality, Municipality's Designer or postal or other courier services to deliver addenda or other information regarding a Contract being bid does not release the bidder from any obligations under said addenda or the conditions of the bid."

SECTION 1.03 – AWARD AND EXECUTION OF CONTRACT

Section 1.03 is supplemented and amended as follows:

Throughout this Section, except for Article 1.03.07, make the following substitutions for all occurrences of the word(s) identified below for substitution:

Substitute "Engineer" for "Commissioner," for "Manager of Contracts" and for "Transportation Manager of Contracts".

Substitute "Municipality" for "Department" and "State".

SECTION 1.04 – SCOPE OF WORK

Section 1.04 is supplemented and amended as follows:

Throughout this Section, make the following substitutions for all occurrences of the word(s) identified below for substitution:

Substitute "Engineer" for "Department's Assistant District Engineer".

Substitute "Municipality" for "Department" and for "State".

SECTION 1.05 – CONTROL OF THE WORK

Section 1.05 is supplemented and amended as follows:

Substitute "Municipality" for "Department" and/or "State" and "Engineer" for "Department's Assistant District Engineer".

1.05.02-1. Plans: Substitute "Municipality" for "Department.

Add the following sentence to the end of the Subarticle: "The Working Drawings, Shop Drawings and Product Data shall be submitted to the Designer as hereinafter noted; copies of transmittal letters shall be sent to the oversight District and the Municipality.

Designer
Shelley Plude, MS, PE
Principal Structural Engineer, Bridge Design Lead
SLR International Corporation
99 Realty Drive
Cheshire, CT 06410
splude@slrconsulting.com
(475) 244-2306

Municipality
Geoff Foster, P.E.
Town Engineer
134 Groton Long Point Road
Groton, CT 06340
GFoster@groton-ct.gov
(860) 448-4072

1.05.02-2. Working Drawings: Substitute "Municipality" for "Assistant District Engineer".

1.05.02-5. Submittal Preparation and Processing − Review Timeframes: Substitute "Designer" for "Department".

Add the following paragraphs:

"Prior to the submission of any working, shop or erection drawings, the Contractor shall prepare and submit to the Engineer, for approval, a schedule for all proposed working and shop drawings. This initial schedule should be submitted within thirty (30) days of contract award and must be submitted before the Notice to Proceed. The Contractor shall coordinate, schedule and control all submittals of working and shop drawings including those of his various subcontractors, suppliers and engineers to provide for an orderly and balanced distribution of the work.

Each Shop Drawing shall include the name and telephone number of the fabricator's contact person who is familiar with the drawing and who will be available to answer questions by the Engineer or Designer should any arise during the review process.

It is incumbent upon the Contractor to submit his shop drawings in accordance with the approved working and shop drawing schedule to facilitate expeditious review. Voluminous submittals of shop drawings at one time are discouraged and may result in increased review time. In no case will the Municipality accept liability for resulting delays, added costs and related damages when the time required for approval extends beyond the approximate times shown herein when the shop drawings are not submitted in conformance with the approved schedule."

1.05.02-5(a). Submissions: Substitute "oversight" for "administering" when citing the Construction District and add "and Municipality" to the end of the sentence.

1.05.02-5(b). Submissions: Substitute "Designer" for "Assistant District Engineer of the administering Construction District".

1.05.02-5(c). Submissions: Substitute "Designer" for "administering Construction District".

1.05.06 − Cooperation with Utilities (including railroads):

Add the following:

Within the project there may be public utility structures; and, notwithstanding any other clause or clauses of this Contract, the Contractor cannot proceed with his work until he has made diligent inquiry with the utility companies, municipal authorities or other utility owners to determine their exact location, and notified "Call Before You Dig". The Contractor shall notify, in writing, the utility companies, municipalities or other owners involved of the nature and scope of the project and of his operations that may affect their facilities or property. Copies of such notices shall be sent to the Engineer.

SECTION 1.06 – CONTROL OF MATERIALS

Section 1.06 is supplemented and amended as follows:

Throughout this Section, make the following substitutions for all occurrences of the word(s) identified below for substitution:

Substitute "Department/Municipality" or "Municipal" for "Department".

SECTION 1.07 – LEGAL RELATIONS AND RESPONSIBILTIES

1.07.01—Laws to be Observed: is amended as follows:

In the second sentence of the first paragraph, after the word "State" add the words "and Municipality".

1.07.03—Proprietary Devices, Materials and Processes: is amended as follows:
After the word "State" add the words "and Municipality" throughout this Article.

1.07.04—Restoration of Surfaces Opened Pursuant to Permit or Contract: is amended as follows:

Replace the word "Department" with "Municipality" throughout this Article.

1.07.07—Safety and Public Convenience: is amended as follows:

In the penultimate paragraph, after the word "Department," add the words "or Municipality".

1.07.09—Protection and Restoration of Property: is supplemented and amended as follows:

Add the words "or Municipality" after the word "State" wherever the word "State" appears in this Article.

Add the phrase "or Municipality, as applicable" after the word "Department" wherever the word "Department" appears in this Article.

Add the following:

> The Contractor shall notify the Tree Warden of the Municipality in which the bridge project is located, five (5) days prior to flagging so that the Tree Warden may be present during the flagging.
>
> All trees scheduled to be removed outside of the proposed gutter or curb lines of the highway shall be visibly marked or flagged by the Contractor at least five (5) days prior to cutting of such trees.
>
> The Engineer will inspect the identified trees and verify the limits of tree removal prior to the Contractor proceeding with his cutting operation, should such an operation be required elsewhere in this contract.

1.07.10—Contractor's Duty to Indemnify the State Against Claims for Injury or Damage:

is amended as follows:

Revise the title of this Article to read "Contractor's Duty to Indemnify the State and/or Municipality Against Claims for Injury or Damage."

In the first sentence, delete the words "the Department".

Replace the word "State" with "State and/or Municipality" throughout this Article.

Replace the word "Commissioner" with "Engineer" throughout this Article.

1.07.13—Contractor's Responsibility for Adjacent Property and Services: is supplemented with the following:

The Contractor's attention is directed to the fact that there are utilities on the existing bridge. In addition, buried utilities do exist in the immediate vicinity of the project.

The Contractor shall be liable for all damages and claims received or sustained by any persons, corporations or property in consequence of damage to the existing utilities, their appurtenances, or other facilities caused directly or indirectly by the operations of the Contractor.

The following companies and their representatives shall be contacted by the Contractor to coordinate the protection of their utilities on the construction site two (2) weeks prior to the start of any work on the project involving their utilities:

Comcast of Connecticut, Inc.
Mr. Christopher Simeone
Construction Manager CT/NY
222 New Park Drive
Berlin, CT 06037
Phone: (860) 491-6701
Email: christopher_simeone@cable.comcast.com

The Southern New England Telephone Company
dba Frontier Communications of Connecticut
Ms. Lynne DeLucia
Manager - Engineering & Construction
1441 North Colony Road
Meriden, CT 06450-4101
Phone: (203) 238-5000
Mobile: (860) 967-4389
E-mail: Lynne.m.delucia@ftr.com

The Connecticut Light and Power Company
dba Eversource Energy – Electric Distribution
Mr. Mark Bonjuklian

Manager – Distribution Projects and Programs
9 Tindall Avenue
Norwalk, CT 06851
Phone: (203) 845-3456
Email: mark.bonjuklian@eversource.com

All work shall be in conformance with Rules and Regulations of Public Utility Regulatory Authority (PURA) concerning Traffic Signals attached to Public Service Company Poles.

1.07.14—Personal Liability of Representatives of the State: is amended as follows:

Add the words "and Municipality" after the word "State".

1.07.15—No Waiver of Legal Rights: is amended as follows:

Replace the words "Commissioner" and "Department" with "Municipality" or "Municipal" throughout this Article.

1.07.16—Unauthorized Use of Area(s) within the Project Site: is amended as follows:

Replace the words "Commissioner" and "State" with "Municipality" throughout this Article.

Add the following new Subarticle:

1.07.19—Personal Liability of Representatives of the Municipality

In carrying out any of the provisions of these specifications, or in exercising any power or authority granted to them by or within the scope of the Contract, the Engineer and his authorized representatives, including consultant engineering firms and their employees, shall be subject to no liability, either personally or as officials of the Municipality, it being understood that in all such matters they act solely as agents and representatives of the Municipality.

SECTION 1.08 – PROSECUTION AND PROGRESS

Article 1.08.04 - Limitation of Operations - Add the following:

In order to provide for traffic operations as outlined in the Special Provision "Maintenance and Protection of Traffic," the Contractor will not be permitted to perform any work which will interfere with the described traffic operations on all project roadways as follows:

Quaker Farm Road

The Contractor's activities on site shall be limited to operations between 7:00 a.m. to 6:00 p.m., Monday through Friday and 7:00 a.m. to Noon on Saturday.

Quaker Farm Road is currently closed to traffic due to the failure of the existing pipe culvert. The roadway shall remain closed for the purposes of constructing the bridge replacement.

All Other Roadways

The Contractor's activities on site shall be limited to operations between 7:00 a.m. to 6:00 p.m., Monday through Friday and 7:00 a.m. to Noon on Saturday.

Additional Lane Closure Restrictions

The Contractor will not be allowed to perform any work that will interfere with traffic operations on a roadway when traffic operations are being restricted on that same roadway, unless there is at least a one-mile clear area length where the entire roadway is open to traffic or the closures have been coordinated and are acceptable to the Engineer. The one mile clear area length shall be measured from the end of the first work area to the beginning of the signing pattern for the next work area.

SECTION 1.09 – MEASUREMENT AND PAYMENT

Section 1.09 is supplemented and amended as follows:

Throughout this Section, make the following substitutions for all occurrences of the word(s) identified below for substitution:

"Municipality" or "Municipal" for "Department" and for "State".

Substitute "Engineer" for "Commissioner".

SECTION 1.10 – ENVIRONMENTAL COMPLIANCE

1.10.02—Compliance with Laws and Regulations: is amended as follows:

Replace the word "Department" with "Municipality" throughout this Article.

1.10.03—Water Pollution Control: is amended as follows:

Replace the word "Department" with "Municipality" throughout this Article.

Add the following sentence after the second sentence of the third paragraph:

The following items may also be superseded by specific permits from the Connecticut Department of Energy and Environmental Protection (DEEP) and/or the appropriate local wetlands and watercourses regulatory authority.

In Paragraph No. 13, replace "State right-of-way" with "State or Municipal right-of-way."

1.10.07—Controlled and Hazardous Materials: is amended as follows:

Replace the word "Department" with "Municipality" throughout this Article.

SECTION 1.11 – CLAIMS

Section 1.11 is supplemented and amended as follows:

Throughout this Section make the following substitutions for all occurrences of the word(s) identified below for substitution:

Substitute "Chief Administrative Official of the Municipality" for "Commissioner".

Substitute "Municipality" or "Municipal" for "Department".

PERMITS AND REQUIRED PROVISIONS

The following Permits and/or Required Provisions follow this page and are hereby made part of this Contract.

- **PERMITS AND/OR PERMIT APPLICATIONS**

Permit	**Permit No.**	**Approval Date**
Town of Groton Inland Wetland Permit	22-11	December 20, 2022
USACE Self-Verification Notification	N/A	April 12, 2024 (Submitted)

- **Construction Contracts – Required Contract Provisions (State Funded Only Contracts)**

TOWN OF GROTON

PLANNING AND DEVELOPMENT SERVICES

Deborah G. Jones
Assistant Director
djones@groton-ct.gov

134 Groton Long Point Road, Groton, Connecticut 06340
Telephone (860) 446-5972 Fax (860) 448-4094
www.groton-ct.gov

December 20, 2022

RECEIVED
DEC 28 2022
R International Corporation

Greg A. Hanover, Director
134 Groton Long Point Rd.
Groton, CT 06340

Dear Mr. Hanover:

SUBJECT: Permit No. 22-11: Quaker Farm Road Bridge Replacement
Plans Last Revised: December 2, 2022

This authorization refers to your application to conduct a regulated activity within designated inland wetlands-watercourses in the Town of Groton. The Inland Wetlands Agency granted the above permit at its December 14, 2022 meeting. The permit is for the following regulated activities:

> Application is to fill 187 square feet of inland wetlands and to impact 415 square feet of inland wetlands. Activity is associated with the replacement of the existing Quaker Farm Road Bridge

This permit is issued subject to the following conditions (please read carefully):

1. This permit shall be valid for ten (10) years.
2. The applicant shall file the original permit in the Land Records of the Town Clerk.
3. No permit shall be assigned or transferred without written notice to the Agency.
4. The Office of Planning and Development Services shall inspect the erosion controls prior to the start of construction.
5. All unconfined in-water work shall be restricted to the period of June 1st to September 30th, inclusive. The installation or removal of water control structures such as cofferdams is acceptable during this period.

Please note that the Groton Inland Wetlands and Watercourses Regulations now require that any application to extend the expiration date of a previously issued permit or amend an existing permit shall be filed with the Agency sixty-five (65) days prior to the expiration date for the permit. If request for extension is filed less than sixty-five (65)

days prior to the expiration date for the permit, the Agency may accept the application only if the work is ongoing.

Sincerely,

Deborah G. Jones
Assistant Director

DGJ:lcg

cc: SLR Consulting
Peter Zvingilas, Manager of Inspection Services
David Scott, Chairperson, IWA

Quaker Farm Road Emergency Culvert Replacement

Application for Department of the Army, General Permit 19 Self-Verification Notification

Town of Groton

134 Groton Long Point Road
Groton, Connecticut 06340

Prepared by:

SLR International Corporation

99 Realty Drive, Cheshire, Connecticut, 06410

SLR Project No.: 141.11461.00018

April 10, 2024

Making Sustainability Happen

Table of Contents

Appendix E: Self-Verification Notification Form

Acronyms and Abbreviations iii

1.0 Introduction 1

2.0 Project Overview 1

Inland Wetland and Watercourse Impacts 1

Endangered Species Act Section 7 Consultations 2

State Historic Preservation Office (SHPO) and Tribal Historic Preservation Offices (THPO) Coordination 2

Sediment and Erosion Control Measures 2

Alternative Analysis 2

Appendices

Appendix A USGS Quad Site Location Map

Appendix B Interagency Coordination Meeting Minutes and Emails

Appendix C ESA Section 7 Agency Consultation Documentation

Appendix D SHPO & THPO Coordination Documentation

Appendix E Photographic Log

Appendix F Project Site Plans

US Army Corps of Engineers®
New England District

Appendix E: Self-Verification Notification Form

This form is required for all inland projects in Connecticut, but it is not required if work is done within boundaries of Mashantucket Pequot or Mohegan Tribal Lands. At least two weeks before work commences, complete all fields (write "none" if applicable) below, send this form, Official Species List (see GC 12), documentation of THPO and SHPO notifications if applicable, site location map, project plans (not required for projects involving the installation of construction mats only) and any State or local approval(s) to:

Regulatory Division, Branch B
U.S. Army Corps of Engineers
696 Virginia Road
Concord, MA 01742-2751
or cenae-r-ct@usace.army.mil

and

CT DEEP
79 Elm Street
Hartford, CT 06106-5127
or DEEP.LWRDRegulatorySubmittals@ct.gov

State Permit Number: N/A Date of State Permit: _____

Permittee: Town of Groton c/o Greg A. Hanover
Address, City, State & Zip: 134 Groton Long Point Road, Groton, CT 06340
Phone(s) and Email: 860-448-4083; pworks@groton-ct.gov

Agent: SLR International Corporation c/o Shelley Plude, MS, PE
Address, City, State & Zip: 99 Realty Drive, Cheshire, CT 06410
Phone(s) and Email: (203) 271-1773 ;splude@slrconsulting.com

Contractor: TBD
Address, City, State & Zip: _____
Phone(s) and Email: _____

Project Name:
Replacement of Quaker Farm Road Culvert Project
Location (provide detailed description & locus map): Quaker Farm Rd between Haley Rd and Lambtown Rd
Address, City, State & Zip: Quaker Farm Rd, Groton, CT 06355
Lat. ° N, Long ° (Decimal Degrees): 41.395801° N, -72.006861° E
Waterway Name: Haleys Brook

Proposed Work Dates: Start: Fall 2024 Finish: Spring 2025

Work will be done under the following GPs (circle all that apply):

2	5	6	9	10	11	12	13	14	15	17	18	19	21

Area of Wetland Impacts (SF): Permanent: 615 Temporary: 15

Area of Waterway Impacts (SF): Permanent: 956 Temporary: 75

TOTAL Project Impact (SF): Permanent: 1571 Temporary: 90

Describe the specific work that will be undertaken in waters and wetlands: The work will involve replacing the existing twin metal pipe culvert with a 16'W by 6'H precast concrete three-sided box culvert. Given the soft soils and standing water conditions, it is anticipated that strip footings and stem walls can be installed within sheet pile cofferdams to reduce the need for extensive water handling efforts associated with a closed bottom structure. Utilizing an open bottom culvert, the existing stream can be maintained in its present location.

Have the THPOs and the CT SHPO been notified of the proposed work per the procedures in GC 11? If so, attach any responses received to this form.
Yes X date contacted 6/2/2022 No _____

Are there Federally listed endangered/threatened species, other than the northern long-eared bat, present? (see GC 12) Yes _____ No X* *One candidate (monarch butterfly) and one proposed endangered (tricolored bat) have the potential to occur.

Confirm no SAVs are present or will be impacted: Yes X No _____
Applicable to GPs:

2	5	6	9	10	11	12	13	14	15	17	18	19	21

Confirm no unconfined work with impact to diadromous fish (see App. H): Yes X No _____
Applicable to GPs:

2	5	6	9	10	19

Confirm work complies with Stream Crossing BMPs (see App. G): Yes X No _____

Applicable to GPs:

2	6	17	19

If GP 19 and work does not comply with Appendix G, identify date of Interagency Meeting where waiver was granted: Date of Meeting: N/A
Identify interagency participants: CT DEEP:_____ USACE:_____

Will your project include any secondary effects? (Secondary effects include, but are not limited to, non-tidal waters or wetlands drained, flooded, fragmented, or mechanically cleared resulting from a single and complete project. See Appendix F - Definitions.) If YES, describe here:
No secondary effects are planned as part of the proposed project.

Your signature below, as permittee, indicates that you accept and agree to comply with the terms, eligibility criteria, and general conditions for Self-Verification under the Connecticut GPs.

Permittee Signature: _____ Date: 4/2/24

Acronyms and Abbreviations

CTDEEP	Connecticut Department of Energy & Environmental Protection
CTDOT	Connecticut Department of Transportation
EPA	Environmental Protection Agency
FEMA	Federal Emergency Management Agency
LF	Linear Feet
OHWL	Ordinary High Water Line
SLR	SLR International Corporation
SF	Square Feet
USACE	United States Army Corps of Engineers

1.0 Introduction

Using state and local funds, the Town of Groton (Town) proposes to construct a new bridge carrying Quaker Farm Road over Haleys Brook (**Appendix A**). The Town has retained SLR International Corporation (SLR) to prepare construction documents and permits. The project is being partially funded under the Connecticut Department of Transportation (CTDOT) State Local Bridge Program (CTDOT Project No. 9058-0015). An interagency coordination meeting for the project was held on June 16, 2022, and attended by representatives from CTDOT, CT Department of Energy and Environmental Protection (CTDEEP), United States Army Corps of Engineers (USACE), and US Environmental Protection Agency (EPA). Interagency meeting minutes and relevant follow-up coordination emails are appended (**Appendix B**).

2.0 Project Overview

The existing twin metal pipe culvert is in poor condition. The pipes have severe corrosion below the water line with section loss and separation between the pipes and the headwalls. This settlement has resulted in loss of material from the roadway above. Quaker Farm Road is currently closed and impassible for personal and emergency vehicles. Due to the condition of the existing culvert, a full bridge replacement is proposed.

The project proposes to replace the existing failed culvert located over Haleys Brook with a 16-foot-wide by 6-foot-high precast concrete three-sided box culvert. Given the soft soils and standing water conditions, it is anticipated that strip footings and stem walls can be installed within sheet pile cofferdams to reduce the need for extensive water handling efforts associated with a closed bottom structure. Utilizing an open bottom culvert, the existing stream can be maintained in its present location. The length of the new culvert will be 30 feet and concrete headwalls and wingwalls will support the roadway embankment. The 24-foot-wide roadway will be reconstructed for a total of 150 linear feet over the culvert and timber post and cable guiderail systems will be replaced with modern metal beam rails.

Haleys Brook is a perennial watercourse that discharges into the Mystic River approximately four miles downstream of the project site. The project includes temporary partial dewatering of the brook to complete the substructure repairs. The plans are designed to maintain partial flow of the brook to ensure adequate habitat for wildlife and fisheries. The banks are heavily vegetated with a native herbaceous layer as well as several native trees and shrubs. Upstream of the crossing is an emergent wetland and downstream of the crossing is a palustrine scrub-shrub wetland. Approximately 1,250 downstream of Quaker Farm Road is an impoundment structure that impounds approximately 8 acres of water. It is anticipated that the impacts to vegetation will be minimal around the construction access area.

Inland Wetland and Watercourse Impacts

Temporary and permanent watercourse impacts are expected to take place below the ordinary high water line (OHWL) to Haleys Brook and within the existing culvert road crossing footprint. These impacts are presented on the Self-Verification Notification Form (SVNF) and include the following:

1. Wetland Impacts – Temporary = 15 square feet (SF) and Permanent = 615 SF
2. Watercourse Impacts – Temporary = 75 SF and Permanent = 956 SF

Endangered Species Act Section 7 Consultations

United States Fish & Wildlife (USFWS) IPaC database, National Oceanic and Atmospheric Administration (NOAA) Endangered Species Act (ESA) Section 7 Mapper, and NOAA Fisheries Essential Fish Habitat (EFH) Mapper were accessed in accordance with section 7(a)(1) of the ESA (**Appendix C)**. No species, critical habitats, essential habitats, nor habitat areas of particular concern were identified by the NOAA EFH Mapper or ESA Section 7 Mapper. The USFWS IPaC database Official Species List identifies the endangered northern long-eared bat (*Myotis septentrionalis*), the proposed endangered tricolored bat (*Perimyotis subflavus*), and the candidate monarch butterfly (*Danaus plexippus*). No critical habitats were identified by IPaC.

An IPaC determination key was completed for the northern long-eared bat, resulting in a determination of “may affect, but not likely to adversely affect” on March 26, 2024. As stated in the consistency letter and confirmed through coordination with USFWS, a lack of response from USFWS within 15 days of submittal (by April 10, 2024) verifies for the purposes of this federal permit that the proposed action is not likely to result in unauthorized take of the northern long-eared bat. The project does not require any significant vegetation clearing; the limited number of trees proposed to be removed are not suitable roost trees, based on a lack of cracks, crevices, and exfoliating bark. The existing culvert is not known or suspected to contain any species of bat. Lastly, no milkweed plants were documented within the project area; therefore, the site does not provide habitat necessary for Monarch butterfly breeding and larval stages.

State Historic Preservation Office (SHPO) and Tribal Historic Preservation Offices (THPO) Coordination

A consultation request form was submitted to the state SHPO office and the THPO on June 2, 2022 (**Appendix D**). On July 5, 2022, SHPO responded to the review request and determined that “no historic properties will be affected” by the proposed project. No response was received from THPO.

Sediment and Erosion Control Measures

During construction, the project will require the use of best management practices to protect the watercourse resources. A robust erosion and sediment control plan has been developed and is indicated on the plans to help protect the water quality within Haleys Brook (**Appendix F**). This plan will follow town regulations and the 2002 Connecticut Guidelines on Soil Erosion and Sediment Control.

Alternative Analysis

The proposed project considered two alternatives: 1) Precast Concrete Three-Sided Rigid Frame, 2) Prestressed Concrete Deck Units with Abutments on Piles, and 3) do nothing. Alternative 1 would restrict underclearance (maximum 4 feet), making it challenging to maintain flows during construction. The associated spread footings would be costly and necessitate more excavation and dewatering efforts. Alternative 2 would avoid these challenges but would require the longest construction schedule of any alternative considered. The ‘do nothing’ alternative would result in no temporary or permanent impacts to Haleys Brook or adjacent wetlands, and it would, in the short term, be less of a financial burden for the Town. However, Quaker Farm Road is closed due to the poor condition of the culvert. Action is required to reopen the road for active transportation. Replacement of the culvert with a precast concrete three-sided box culvert will include impacts to Haleys Brook and adjacent wetlands, but it remains the most time- and cost-effective option and allows for flow maintenance during construction.

Appendix A USGS Quad Site Location Map

Quaker Farm Road Emergency Culvert Replacement

Application for Department of the Army, General Permit 19 Self-Verification Notification

Town of Groton

SLR Project No.: 141.11461.00018

April 10, 2024

Copyright SLR Consulting - 2021
Date Saved: 7/20/2021
Document Path: W:\Design\11461.00018-DE\GIS\Maps\locus.mxd

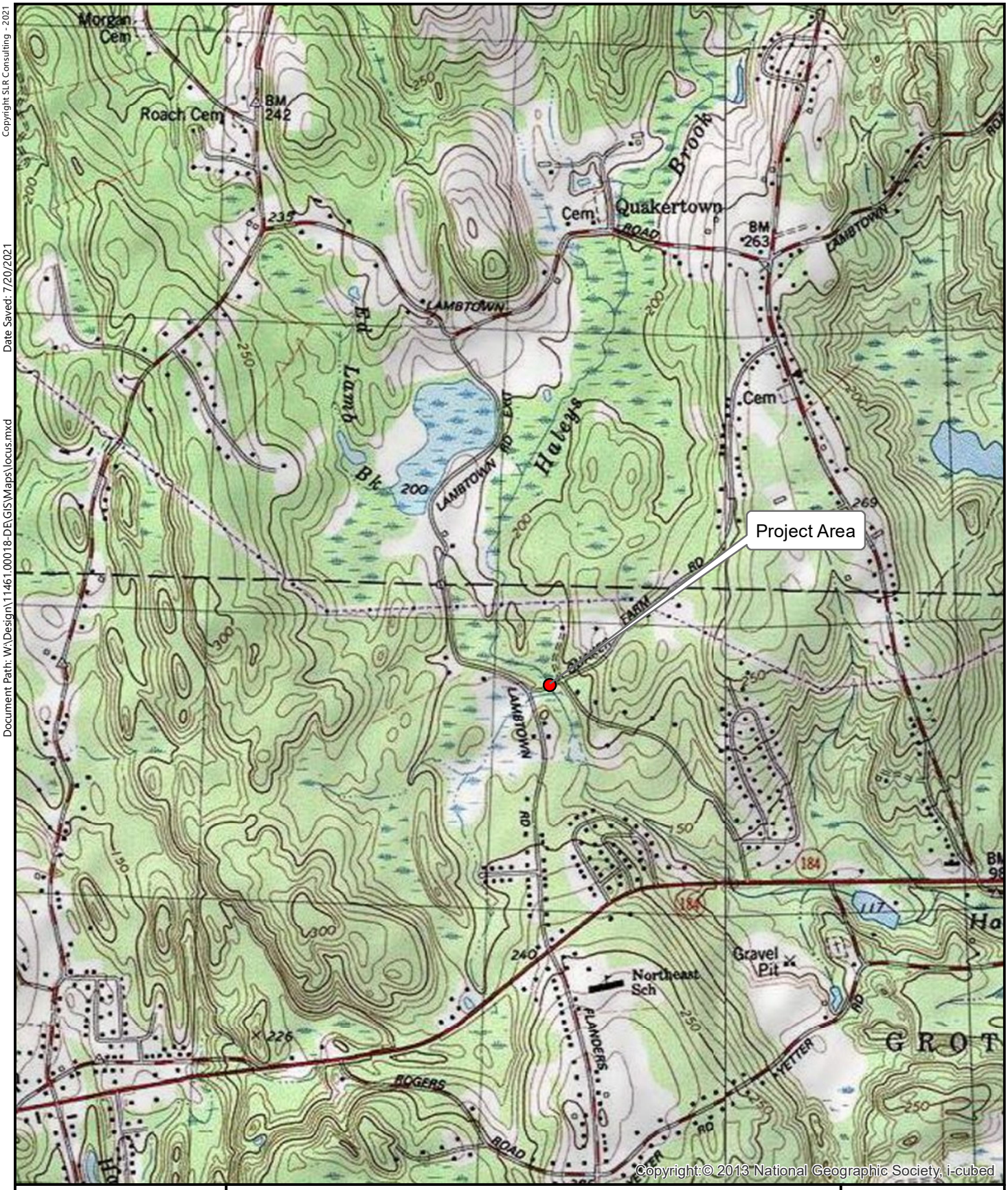

SLR

99 REALTY DRIVE
CHESHIRE, CT 06410
203.271.1773

OVERVIEW MAP

GROTON REPLACEMENT OF QUAKER FARM ROAD CULVERT
TOWN OF GROTON

QUAKER FARM ROAD
GROTON, CONNECTICUT

N

0 500 1,000
Feet

SCALE 1 " = 2,000 '

DATE 7/20/2021

141.11461.00018
PROJ. NO.

ATT. A

Appendix B Interagency Coordination Meeting Minutes and Emails

Quaker Farm Road Emergency Culvert Replacement

Application for Department of the Army, General Permit 19 Self-Verification Notification

Town of Groton

SLR Project No.: 141.11461.00018

April 10, 2024

INTERAGENCY COORDINATION MEETING - Municipal Project

June 16, 2022 via Teams

Attendees: Farrah Ashe, Bianca Beland (DEEP LWRD), Bruce Williams, Joe Cassone (DEEP Fisheries), Peter Olmstead, Charlotte Skolnick (USACE), Nate Margason (EPA), David Harms, Michelle Roise, Alejandro Brito (CTDOT EPC), Kevin Carifa (CTDOT OEP), Mary Baier, Edwin Rodriguez, Donna Salzillo (CTDOT OOC), Michael Hogan (CTDOT H&D), Matt Vail (CTDOT Principle Engineer), Shelley Plude (SLR), Eimy Quispe, Alexander Ericson, Meagan Fogarty

Project 9058-0015 – Replacement of Bridge No. 058015, Quaker Farm Road over Haley's Brook, Groton, CT

The existing structure consist of two-54" dia. corrugated metal pipes. The pipes are in poor condition, with section loss and separation between the pipes and the headwalls. Settlement has resulted in loss of material from the roadway above. Quaker Farm Road is currently closed due to the condition of the pipes. The pipes are hydraulically inadequate and overtops during the 50 yr. storm. There is debris that accumulates at the inlets of the pipes and the site has a clogging history due to beaver activity. An existing spillway is located downstream of the structure which controls the flow through the pipes.

The pipes will be replaced with a 26-ft span bridge consisting of prestressed concrete deck units supported by concrete abutments and pile foundations. A natural streambed will be constructed with native material. Rounded riprap is proposed at the face of the abutments and wingwalls and will be topped with native material. Regrading of the embankment slopes is required to provide a shelf for installation of guiderail.

The drainage area for the crossing is 2.75 sq. mi. The project is located in a FEMA floodplain with no base flood elevation. The proposed design passes the 100-year storm event with one foot of freeboard. The total estimated wetland/watercourse impacts for the project are 1,661 s.f. It is estimated a 41 CY net cut in the floodplain. The project is located within a NDDB area and final determination letter is pending. SHPO/THPO coordination is also pending. The IPac review resulted in NLEB and the Monarch butterfly. The project location is not near any NLEB hibernacula and no milkweed has been found on site.

The project is proposed to be constructed using cofferdam & dewatering for the footings and abutment installation and a 48" water-handling pipe for conveying Haley's Brook.

AGENCY COMMENTS/QUESTIONS:

- CTDEEP inquired about the downstream spillway and if any wetland loss is expected due to the proposed wider span at the crossing. The Designer noted that this was reviewed

and the modeling concluded there is negligible change and therefore no effect. EPC mentioned that the beavers in the area may also have an effect. CTDEEP stated they would want to review the hydraulic information to confirm the no effect result.

- CTDEEP inquired where the staging is proposed for the project. The Designer stated this is usually determined by the contractor. Staging will be outside the wetland area, but, may not be able to be outside the floodplain. CTDEEP noted the project must have a flood contingency plan.

- USACE asked if there will be tree clearing. The Designer noted the area is mostly brush in the area, but, there may be about 6 smaller trees that need to be removed in order to construct the project. USACE noted that the 4(d) Form will need to be completed.

- USACE asked if the bridge is historic. Designer noted they are waiting for a SHPO response. However, when inspecting the bridge, it was noticed the walls are not stone all the way through and the original pipe has been previously slip-lined. No records were found when researching with the Town. It is anticipated no historical impact. CTDEEP indicated the crossing is there when viewing 1934 photo and will wait on the SHPO response before making a permit determination.

- CTDEEP indicated the NDDB database noted a special wetland west of Lambtown Road that contains an endangered plant species. CTDEEP would like a site walk to view the special wetland and the project site to see what is there. Currently the NDDB map does not show the plant at the project site, however a site walk could confirm. CTDEEP requested a representative from NDDB be at the site walk. USACE is unsure if they can attend, but, requested to be included on the invite. CTDEEP noted they can inform USACE of the site walk outcome if they cannot attend.

- USACE noted the SHPO/THPO consultation will need to be completed in order to make a permitting determination, along with the CTDEEP Fisheries review. EPC asked if THPO reviews were still on hold due to the pandemic? CTDOT responded it should be coming off pause. USACE clarified that it is the Consultant to do the SHPO/THPO* coordination.

- CTDEEP Fisheries stated there are no special precautions needed for the Banded Sunfish that is noted to be in the area and would recommend the standard BMP's for the project. In addition, the unconfined in stream work to be restricted to June 1 to September 30, not including the installation and removal of water handling cofferdams. CTDEEP fisheries requested to be invited to the site walk.

It was noted that the Project does not have to be presented again at the ICM as it is anticipated that the site walk can conclude the project review and reach a permit

determination. This is with the expectation that all outstanding consultations are completed.

ACTION ITEMS:

- Prior to site walk: Designer to submit via email the hydraulic information/result of the modeling to confirm no loss of wetland.
- Prior to site walk: A NDDB Determination letter and Fisheries consultation memo will be required to complete the project review and to confirm permit determination.
- SHPO and THPO * consultation shall also be completed for final permit determination.
- Consultant to coordinate a site walk with CTDEEP, USACE, EPA, CTDEEP NDDB, and CTDEEP Fisheries.

PERMITS:

- Local IW
- Local FM
- USACE / DEEP – TBD

* FYI: It should be noted that the consultant can attempt to conduct THPO coordination, but there is no assurance that the tribes will respond; the tribes have requested to coordinate with Federal agencies only – not even DOT's. Unlike with federal agencies, no response (after 30 days) to the consultant will not count as THPO coordination.

From: Ashe, Farrah
Sent on: July 21, 2022 11:08:06 AM
To: Shelley Plude
CC: Matthew J. Sanford
Subject: RE: SPN 9058-00015 Quaker Farm Road Site Visit

Thank you

From: Shelley Plude <splude@slrconsulting.com>
Sent: Thursday, July 21, 2022 11:01 AM
To: Ashe, Farrah <Farrah.Ashe@ct.gov>
Cc: 'Skolnick, Charlotte R CIV USARMY CENAE (USA)' <Charlotte.R.Skolnick@usace.army.mil>; Margason, Nathan <Margason.Nathan@epa.gov>; Beland, Bianca <Bianca.Beland@ct.gov>; Matthew J. Sanford <msanford@slrconsulting.com>
Subject: RE: SPN 9058-00015 Quaker Farm Road Site Visit

EXTERNAL EMAIL: This email originated from outside of the organization. Do not click any links or open any attachments unless you trust the sender and know the content is safe.

Hi Farrah,
Thank you for the follow up. We're working on getting that inundation map together and should have that for you shortly.

SLR

Shelley Plude,MS, PE
Senior Structural Engineer, Bridge Design Lead

D475-244-2306
O203-271-1773
E splude@slrconsulting.com

SLR International Corporation
99 Realty Drive,Cheshire,CT06410

Follow us on LinkedIn

2020 ROSPA President's Award

Winners: RoSPA President's Award 2020

Confidentiality Notice and Disclaimer
This communication and any attachment(s) contain information which is confidential and may also be legally privileged. It is intended for the exclusive use of the recipient(s) to whom it is addressed. If you have received this communication in error, please e-mail us by return e-mail and then delete the e-mail from your system together with any copies of it. Any views or opinions are solely those of the author and do not represent those of SLR Management Ltd, or any of its subsidiaries, unless specifically stated.

From: Ashe, Farrah <Farrah.Ashe@ct.gov>
Sent: July 21, 2022 10:56 AM
To: Shelley Plude <splude@slrconsulting.com>
Cc: 'Skolnick, Charlotte R CIV USARMY CENAE (USA)' <Charlotte.R.Skolnick@usace.army.mil>; Margason, Nathan <Margason.Nathan@epa.gov>; Beland, Bianca <Bianca.Beland@ct.gov>
Subject: RE: SPN 9058-00015 Quaker Farm Road Site Visit

Hello Shelley,
I just wanted to close the loop with you that I did discuss the site visit with the USACE and EPA yesterday. Once you provide the areas for the existing and proposed condition for that lower storm (1 year, 1.5 year, or 2 year), if the secondary impacts/change is minimal, then we are all on the same page concurring with an SV. I will look for follow-up with those additional materials. As noted in the field, if these are greater than minimal, we can discuss options for wetland enhancements so the overall project maintains water quality in the area. USACE noted agreement with this framework.
Thank you,

Farrah Ashe
Environmental Analyst 2
Regulatory East
Land & Water Resources Division
Bureau of Water Protection & Land Reuse
Connecticut Department of Energy and Environmental Protection
79 Elm Street, Hartford, CT 06106-5127
P: 860.424.3169 | F: 860.424.4075

Connecticut Department of
ENERGY & ENVIRONMENTAL PROTECTION

https://portal.ct.gov/deep
Conserving, improving and protecting our natural resources and environment;
Ensuring a clean, affordable, reliable, and sustainable energy supply.

From: Shelley Plude <splude@slrconsulting.com>
Sent: Friday, July 15, 2022 9:20 AM
To: Ashe, Farrah <Farrah.Ashe@ct.gov>; Beland, Bianca <Bianca.Beland@ct.gov>; Charlotte.R.Skolnick@usace.army.mil; 'Olmstead, Peter D CIV USARMY CENAE (USA)' <Peter.D.Olmstead@usace.army.mil>; Margason, Nathan <Margason.Nathan@epa.gov>; Williams, Bruce <Bruce.Williams@ct.gov>; ghanover <ghanover@groton-ct.gov>; Matthew J. Sanford <msanford@slrconsulting.com>; Bill Stango <wstango@slrconsulting.com>; Roise, Michelle A. <Michelle.Roise@ct.gov>
Subject: RE: SPN 9058-00015 Quaker Farm Road Site Visit

EXTERNAL EMAIL: This email originated from outside of the organization. Do not click any links or open any attachments unless you trust the sender and know the content is safe.

Good morning,

I just wanted to follow up on our meeting for next week. I believe we've received responses from most participants, however, I don't think we have a representative from Army Corps confirmed. We had discussed potentially having our permit determination at this site visit. If USACE is unable to attend, when do you think you can make your official determination?
We will need to follow up with Fisheries at another time.
Thanks,
Shelley

SLR

Shelley Plude,MS, PE
Senior Structural Engineer, Bridge Design Lead

D475-244-2306
O203-271-1773
E splude@slrconsulting.com

SLR International Corporation
99 Realty Drive,Cheshire,CT06410

Follow us on LinkedIn
2020 ROSPA President's Award
Winners: RoSPA President's Award 2020

Confidentiality Notice and Disclaimer
This communication and any attachment(s) contain information which is confidential and may also be legally privileged. It is intended for the exclusive use of the recipient(s) to whom it is addressed. If you have received this communication in error, please e-mail us by return e-mail and then delete the e-mail from your system together with any copies of it. Any views or opinions are solely those of the author and do not represent those of SLR Management Ltd, or any of its subsidiaries, unless specifically stated.

-----Original Appointment-----
From: Shelley Plude
Sent: July 13, 2022 9:06 AM
To: Shelley Plude; Ashe, Farrah; Beland, Bianca; Charlotte.R.Skolnick@usace.army.mil; 'Olmstead, Peter D CIV USARMY CENAE (USA)'; 'Margason.Nathan@epa.gov'; Williams, Bruce; Hanover, Greg; Matthew J. Sanford; Bill Stango; Roise, Michelle A.
Subject: SPN 9058-00015 Quaker Farm Road Site Visit
When: July 19, 2022 1:00 PM-2:00 PM (UTC-05:00) Eastern Time (US & Canada).
Where: Quaker Farm Road, Groton, CT
Good morning,
I received responses to our poll from the majority of people who had expressed interest in attending this site visit so I wanted to go ahead an issue an invitation for the date/time that appeared to work for the majority of attendees. If we push out to the following week it appears we start running into more conflicts. The purpose of this meeting is to evaluate the site and hopefully come to a

determination on the required permits. Please let me know if you are unable to attend. Feel free to forward this invitation to anyone who may wish to be present.

Thank you,

Shelley

From: Ashe, Farrah
Sent on: September 27, 2022 3:33:33 PM
To: Shelley Plude; Matthew J. Sanford; Williams, Bruce
CC: Roise, Michelle A.; ghanover; Bill Stango; Beland, Bianca; Charlotte.R.Skolnick@usace.army.mil; Olmstead, Peter D CIV USARMY CENAE (USA)
Subject: RE: SPN 9058-0015 Quaker Farm Road Groton
Attachments: 11461.00018.s1922.memo.pdf (143.86 KB)

Thank you Shelley for following up with the attached information,
Can you please clarify the following with the proposed revised design:

1. With the proposed change in the invert/channel geometry, what is the freeboard provided at the 100-year frequency storm event? In the original presentation materials from the June 16, 2022 ICM, it was noted that the new structure would pass the 100-year frequency event with over 1' of freeboard. Is this still the case with this change, and if it is not, what elevation of freeboard will be provided at the 100-year frequency storm event?
2. Can you please note if the impact area values presented at the June 16, 2022 ICM have changed or remained the same? If they have changed, can you please include those new temporary and permanent wetland and watercourse impact values?
3. Can you note the material which will be utilized to shape/construct the modified channel? Will this be composed of natural streambed material?

I am including Bruce on this correspondence so he may view the new channel geometry and make comment if he has any concerns with the change as banded sunfish was noted as a species for this site/structure and Bruce noted that there are brook trout in this area as well.
Thank you,
Farrah Ashe
Environmental Analyst 2
Regulatory East
Land & Water Resources Division
Bureau of Water Protection & Land Reuse
Connecticut Department of Energy and Environmental Protection
79 Elm Street, Hartford, CT 06106-5127
P: 860.424.3169 | F: 860.424.4075

Connecticut Department of
ENERGY & ENVIRONMENTAL PROTECTION

https://portal.ct.gov/deep
Conserving, improving and protecting our natural resources and environment;
Ensuring a clean, affordable, reliable, and sustainable energy supply.

From: Shelley Plude <splude@slrconsulting.com>
Sent: Monday, September 19, 2022 3:32 PM
To: Ashe, Farrah <Farrah.Ashe@ct.gov>; Beland, Bianca <Bianca.Beland@ct.gov>; Charlotte.R.Skolnick@usace.army.mil; 'Olmstead, Peter D CIV USARMY CENAE (USA)' <Peter.D.Olmstead@usace.army.mil>
Cc: Roise, Michelle A. <Michelle.Roise@ct.gov>; Matthew J. Sanford <msanford@slrconsulting.com>; ghanover <ghanover@groton-ct.gov>; Bill Stango <wstango@slrconsulting.com>
Subject: SPN 9058-0015 Quaker Farm Road Groton

EXTERNAL EMAIL: This email originated from outside of the organization. Do not click any links or open any attachments unless you trust the sender and know the content is safe.

Good afternoon,
Attached is a memorandum discussing the impact of the culvert replacement on low level storm events as requested following our site visit. We have made some minor modifications to the channel invert and proposed channel cross section to create a low flow channel which will allow us to essentially maintain water surface elevations during the 1-year event. Please review and let us know if any further information is required for USACE and CTDEEP to provide their permit concurrence.
Thank you,
Shelley

From: Ashe, Farrah
Sent on: October 06, 2022 8:36:35 AM
To: Shelley Plude; Matthew J. Sanford; Olmstead, Peter D CIV USARMY CENAE (USA)
CC: Roise, Michelle A.; ghanover; Bill Stango; Beland, Bianca; Charlotte.R.Skolnick@usace.army.mil; Williams, Bruce
Subject: RE: SPN 9058-0015 Quaker Farm Road Groton

Thank for following up and answering those questions for me Shelley,
CT DEEP believes that the project is SV eligible with the revised design that you have provided. I believe that you should be all set to submit the SV package when you are ready. Thank you for making those revisions to eliminate secondary impacts associated with the change in water surface elevation and the adjacent wetland areas.
Peter or Charlotte please feel free to weigh in from the perspective of the USACE. This project was originally discussed at the June 16, 2022 ICM. A site visit was conducted on July 19, 2022.
Thank you,
Farrah

From: Shelley Plude <splude@slrconsulting.com>
Sent: Wednesday, October 5, 2022 4:20 PM
To: Ashe, Farrah <Farrah.Ashe@ct.gov>; Matthew J. Sanford <msanford@slrconsulting.com>; Williams, Bruce <Bruce.Williams@ct.gov>
Cc: Roise, Michelle A. <Michelle.Roise@ct.gov>; ghanover <ghanover@groton-ct.gov>; Bill Stango <wstango@slrconsulting.com>; Beland, Bianca <Bianca.Beland@ct.gov>; Charlotte.R.Skolnick@usace.army.mil; 'Olmstead, Peter D CIV USARMY CENAE (USA)' <Peter.D.Olmstead@usace.army.mil>
Subject: RE: SPN 9058-0015 Quaker Farm Road Groton

EXTERNAL EMAIL: This email originated from outside of the organization. Do not click any links or open any attachments unless you trust the sender and know the content is safe.

Good afternoon,
Our responses to your questions are below. Please let me know if you need anything further.
Thank you,
Shelley

SLR

Shelley Plude,MS, PE
Senior Structural Engineer, Bridge Design Lead

D475-244-2306
O203-271-1773
E splude@slrconsulting.com

SLR International Corporation
99 Realty Drive,Cheshire,CT06410

2022 ROSPA President's Award

Confidentiality Notice and Disclaimer
This communication and any attachment(s) contain information which is confidential and may also be legally privileged. It is intended for the exclusive use of the recipient(s) to whom it is addressed. If you have received this communication in error, please e-mail us by return e-mail and then delete the e-mail from your system together with any copies of it. Any views or opinions are solely those of the author and do not represent those of SLR Management Ltd, or any of its subsidiaries, unless specifically stated.

From: Ashe, Farrah <Farrah.Ashe@ct.gov>
Sent: September 27, 2022 3:34 PM
To: Shelley Plude <splude@slrconsulting.com>; Matthew J. Sanford <msanford@slrconsulting.com>; Williams, Bruce <Bruce.Williams@ct.gov>
Cc: Roise, Michelle A. <Michelle.Roise@ct.gov>; ghanover <ghanover@groton-ct.gov>; Bill Stango <wstango@slrconsulting.com>; Beland, Bianca <Bianca.Beland@ct.gov>; Charlotte.R.Skolnick@usace.army.mil; 'Olmstead, Peter D CIV USARMY CENAE (USA)' <Peter.D.Olmstead@usace.army.mil>
Subject: RE: SPN 9058-0015 Quaker Farm Road Groton

Thank you Shelley for following up with the attached information,
Can you please clarify the following with the proposed revised design:

1. With the proposed change in the invert/channel geometry, what is the freeboard provided at the 100-year frequency storm event? In the original presentation materials from the June 16, 2022 ICM, it was noted that the new structure would pass the 100-year frequency event with over 1' of freeboard. Is this still the case with this change, and if it is not, what elevation of freeboard will be provided at the 100-year frequency storm event?
   The revision to the channel invert and cross section did alter the 100-year design storm. The elevation has changed from 188.05 to 188.84. Despite the increase, there will still be 1-foot of freeboard relative to the low point in the roadway west of the bridge.
2. Can you please note if the impact area values presented at the June 16, 2022 ICM have changed or remained the same? If they have changed, can you please include those new temporary and permanent wetland and watercourse impact values?
   The impact areas have been revised. I've included a table below that indicates the previous and revised areas.

Regulated Resource Activities	*Previously Reported*	*Revised*
Permanent Impacts Below OHWL	*956 SF*	*730 SF*
Temporary Impacts Below OHWL	*75 SF*	*92 SF*
Permanent Impacts to State/Federal Wetlands	*615 SF*	*343 SF*
Temporary Impacts to State/Federal Wetlands	*15 SF*	*72 SF*
Fill in the Floodplain	*42 CY*	*40 CY*
Cut in the Floodplain	*83 CY*	*63 CY*
Net Cut/Fill in Floodplain	*41 CY (Net Cut)*	*23 CY (Net Cut)*

3. Can you note the material which will be utilized to shape/construct the modified channel? Will this be composed of natural streambed material?
   Yes. The material used will be native streambed material and the CTDOT standard specifications for "Excavation and Reuse of Streambed Material" and "Supplemental Streambed Material" will be used.

I am including Bruce on this correspondence so he may view the new channel geometry and make comment if he has any concerns with the change as banded sunfish was noted as a species for this site/structure and Bruce noted that there are brook trout in this area as well.
Thank you,

Farrah Ashe
Environmental Analyst 2
Regulatory East
Land & Water Resources Division
Bureau of Water Protection & Land Reuse
Connecticut Department of Energy and Environmental Protection
79 Elm Street, Hartford, CT 06106-5127
P: 860.424.3169 | F: 860.424.4075

Connecticut Department of
ENERGY & ENVIRONMENTAL PROTECTION

https://portal.ct.gov/deep
Conserving, improving and protecting our natural resources and environment;
Ensuring a clean, affordable, reliable, and sustainable energy supply.

From: Shelley Plude <splude@slrconsulting.com>
Sent: Monday, September 19, 2022 3:32 PM
To: Ashe, Farrah <Farrah.Ashe@ct.gov>; Beland, Bianca <Bianca.Beland@ct.gov>; Charlotte.R.Skolnick@usace.army.mil; 'Olmstead, Peter D CIV USARMY CENAE (USA)' <Peter.D.Olmstead@usace.army.mil>
Cc: Roise, Michelle A. <Michelle.Roise@ct.gov>; Matthew J. Sanford <msanford@slrconsulting.com>; ghanover <ghanover@groton-ct.gov>; Bill Stango <wstango@slrconsulting.com>
Subject: SPN 9058-0015 Quaker Farm Road Groton

EXTERNAL EMAIL: This email originated from outside of the organization. Do not click any links or open any attachments unless you trust the sender and know the content is safe.

Good afternoon,
Attached is a memorandum discussing the impact of the culvert replacement on low level storm events as requested following our site visit. We have made some minor modifications to the channel invert and proposed channel cross section to create a low flow channel

which will allow us to essentially maintain water surface elevations during the 1-year event. Please review and let us know if any further information is required for USACE and CTDEEP to provide their permit concurrence.

Thank you,

Shelley

Shelley Plude,MS, PE

Senior Structural Engineer, Bridge Design Lead

D 475-244-2306

O 203-271-1773

E splude@slrconsulting.com

SLR International Corporation

99 Realty Drive,Cheshire,CT06410

Confidentiality Notice and Disclaimer

This communication and any attachment(s) contain information which is confidential and may also be legally privileged. It is intended for the exclusive use of the recipient(s) to whom it is addressed. If you have received this communication in error, please e-mail us by return e-mail and then delete the e-mail from your system together with any copies of it. Any views or opinions are solely those of the author and do not represent those of SLR Management Ltd, or any of its subsidiaries, unless specifically stated.

Appendix C ESA Section 7 Agency Consultation Documentation

Quaker Farm Road Emergency Culvert Replacement

Application for Department of the Army, General Permit 19 Self-Verification Notification

Town of Groton

SLR Project No.: 141.11461.00018

April 10, 2024

EFH Mapper Report

EFH Data Notice

Essential Fish Habitat (EFH) is defined by textual descriptions contained in the fishery management plans developed by the regional fishery management councils. In most cases mapping data can not fully represent the complexity of the habitats that make up EFH. This report should be used for general interest queries only and should not be interpreted as a definitive evaluation of EFH at this location. A location-specific evaluation of EFH for any official purposes must be performed by a regional expert. Please refer to the following links for the appropriate regional resources.

Greater Atlantic Regional Office
Atlantic Highly Migratory Species Management Division

Query Results

Degrees, Minutes, Seconds: Latitude = 41º 23' 45" N, Longitude = 73º 59' 35" W
Decimal Degrees: Latitude = 41.396, Longitude = -72.007

The query location intersects with spatial data representing EFH and/or HAPCs for the following species/management units.

*** W A R N I N G ***

Please note under "Life Stage(s) Found at Location" the category "ALL" indicates that all life stages of that species share the same map and are designated at the queried location.

EFH

No additional Essential Fish Habitats (EFH) were identified at the report location.

Pacific Salmon EFH

No Pacific Salmon Essential Fish Habitat (EFH) were identified at the report location.

Atlantic Salmon

No Atlantic Salmon were identified at the report location.

HAPCs

No Habitat Areas of Particular Concern (HAPC) were identified at the report location.

EFH Areas Protected from Fishing

No EFH Areas Protected from Fishing (EFHA) were identified at the report location.

Spatial data does not currently exist for all the managed species in this area. The following is a list of species or management units for which there is no spatial data. ****For links to all EFH text descriptions see the complete data inventory: open data inventory -->**
All EFH species have been mapped for the Greater Atlantic region, **Atlantic Highly Migratory Species EFH**, Bigeye Sand Tiger Shark, Bigeye Sixgill Shark,

Spatial data does not currently exist for all the managed species in this area. The following is a list of species or management units for which there is no spatial data. ****For links to all EFH text descriptions see the complete data inventory: open data inventory -->**
Caribbean Sharpnose Shark, Galapagos Shark, Narrowtooth Shark, Sevengill Shark, Sixgill Shark, Smooth Hammerhead Shark, Smalltail Shark

Drawn Action Area & Overlapping S7 Consultation Areas

Area of Interest (AOI) Information

Area : 2,061.45 acres

Mar 26 2024 14:34:45 Eastern Daylight Time

No results within 1 mile of action area (Quaker Farm Road over Haleys Brook).

Summary

Name	Count	Area(acres)	Length(mi)
Atlantic Sturgeon	0	0	N/A
Shortnose Sturgeon	0	0	N/A
Atlantic Salmon	0	0	N/A
Sea Turtles	0	0	N/A
Atlantic Large Whales	0	0	N/A
In or Near Critical Habitat	0	0	N/A

United States Department of the Interior

FISH AND WILDLIFE SERVICE
New England Ecological Services Field Office
70 Commercial Street, Suite 300
Concord, NH 03301-5094
Phone: (603) 223-2541 Fax: (603) 223-0104

In Reply Refer To: 03/26/2024 17:03:23 UTC
Project Code: 2022-0048850
Project Name: Quaker Farm Road Emergency Culvert Replacement

Subject: List of threatened and endangered species that may occur in your proposed project location or may be affected by your proposed project

To Whom It May Concern:

Updated 4/12/2023 - Please review this letter each time you request an Official Species List, we will continue to update it with additional information and links to websites may change.

About Official Species Lists

The purpose of the Act is to provide a means whereby threatened and endangered species and the ecosystems upon which they depend may be conserved. Federal and non-Federal project proponents have responsibilities under the Act to consider effects on listed species.

The enclosed species list identifies threatened, endangered, proposed, and candidate species, as well as proposed and final designated critical habitat, that may occur within the boundary of your proposed project and/or may be affected by your proposed project. The species list fulfills the requirements of the U.S. Fish and Wildlife Service (Service) under section 7(c) of the Endangered Species Act (Act) of 1973, as amended (16 U.S.C. 1531 et seq.).

New information based on updated surveys, changes in the abundance and distribution of species, changed habitat conditions, or other factors could change this list. Please note that under 50 CFR 402.12(e) of the regulations implementing section 7 of the Act, the accuracy of this species list should be verified after 90 days. The Service recommends that verification be completed by visiting the IPaC website at regular intervals during project planning and implementation for updates to species lists and information. An updated list may be requested by returning to an existing project's page in IPaC.

Endangered Species Act Project Review

Please visit the "**New England Field Office Endangered Species Project Review and Consultation**" website for step-by-step instructions on how to consider effects on listed

species and prepare and submit a project review package if necessary:

https://www.fws.gov/office/new-england-ecological-services/endangered-species-project-review

NOTE Please do not use the **Consultation Package Builder** tool in IPaC except in specific situations following coordination with our office. Please follow the project review guidance on our website instead and reference your **Project Code** in all correspondence.

Northern Long-eared Bat - (**Updated 4/12/2023**) The Service published a final rule to reclassify the northern long-eared bat (NLEB) as endangered on November 30, 2022. The final rule went into effect on March 31, 2023. You may utilize the **Northern Long-eared Bat Rangewide Determination Key** available in IPaC. More information about this Determination Key and the Interim Consultation Framework are available on the northern long-eared bat species page:

https://www.fws.gov/species/northern-long-eared-bat-myotis-septentrionalis

For projects that previously utilized the 4(d) Determination Key, the change in the species' status may trigger the need to re-initiate consultation for any actions that are not completed and for which the Federal action agency retains discretion once the new listing determination becomes effective. If your project was not completed by March 31, 2023, and may result in incidental take of NLEB, please reach out to our office at newengland@fws.gov to see if reinitiation is necessary.

Additional Info About Section 7 of the Act
Under section 7(a)(2) of the Act and its implementing regulations (50 CFR 402 et seq.), Federal agencies are required to determine whether projects may affect threatened and endangered species and/or designated critical habitat. If a Federal agency, or its non-Federal representative, determines that listed species and/or designated critical habitat may be affected by the proposed project, the agency is required to consult with the Service pursuant to 50 CFR 402. In addition, the Federal agency also may need to consider proposed species and proposed critical habitat in the consultation. 50 CFR 402.14(c)(1) specifies the information required for consultation under the Act regardless of the format of the evaluation. More information on the regulations and procedures for section 7 consultation, including the role of permit or license applicants, can be found in the "Endangered Species Consultation Handbook" at:

https://www.fws.gov/service/section-7-consultations

In addition to consultation requirements under Section 7(a)(2) of the ESA, please note that under sections 7(a)(1) of the Act and its implementing regulations (50 CFR 402 et seq.), Federal agencies are required to utilize their authorities to carry out programs for the conservation of threatened and endangered species. Please contact NEFO if you would like more information.

Candidate species that appear on the enclosed species list have no current protections under the ESA. The species' occurrence on an official species list does not convey a requirement to

consider impacts to this species as you would a proposed, threatened, or endangered species. The ESA does not provide for interagency consultations on candidate species under section 7, however, the Service recommends that all project proponents incorporate measures into projects to benefit candidate species and their habitats wherever possible.

Migratory Birds

In addition to responsibilities to protect threatened and endangered species under the Endangered Species Act (ESA), there are additional responsibilities under the Migratory Bird Treaty Act (MBTA) and the Bald and Golden Eagle Protection Act (BGEPA) to protect native birds from project-related impacts. Any activity, intentional or unintentional, resulting in take of migratory birds, including eagles, is prohibited unless otherwise permitted by the U.S. Fish and Wildlife Service (50 C.F.R. Sec. 10.12 and 16 U.S.C. Sec. 668(a)). For more information regarding these Acts see:

https://www.fws.gov/program/migratory-bird-permit

https://www.fws.gov/library/collections/bald-and-golden-eagle-management

Please feel free to contact us at **newengland@fws.gov** with your **Project Code** in the subject line if you need more information or assistance regarding the potential impacts to federally proposed, listed, and candidate species and federally designated and proposed critical habitat.

Attachment(s): Official Species List

Attachment(s):

- Official Species List

OFFICIAL SPECIES LIST

This list is provided pursuant to Section 7 of the Endangered Species Act, and fulfills the requirement for Federal agencies to "request of the Secretary of the Interior information whether any species which is listed or proposed to be listed may be present in the area of a proposed action".

This species list is provided by:

New England Ecological Services Field Office
70 Commercial Street, Suite 300
Concord, NH 03301-5094
(603) 223-2541

PROJECT SUMMARY

Project Code: 2022-0048850
Project Name: Quaker Farm Road Emergency Culvert Replacement
Project Type: Culvert Repair/Replacement/Maintenance
Project Description: Culvert Replacement Project
Project Location:

The approximate location of the project can be viewed in Google Maps: https://www.google.com/maps/@41.39579835,-72.00683216028287,14z

Counties: New London County, Connecticut

ENDANGERED SPECIES ACT SPECIES

There is a total of 3 threatened, endangered, or candidate species on this species list.

Species on this list should be considered in an effects analysis for your project and could include species that exist in another geographic area. For example, certain fish may appear on the species list because a project could affect downstream species.

IPaC does not display listed species or critical habitats under the sole jurisdiction of NOAA Fisheries[1], as USFWS does not have the authority to speak on behalf of NOAA and the Department of Commerce.

See the "Critical habitats" section below for those critical habitats that lie wholly or partially within your project area under this office's jurisdiction. Please contact the designated FWS office if you have questions.

---

1. NOAA Fisheries, also known as the National Marine Fisheries Service (NMFS), is an office of the National Oceanic and Atmospheric Administration within the Department of Commerce.

MAMMALS

NAME	STATUS
Northern Long-eared Bat *Myotis septentrionalis* No critical habitat has been designated for this species. Species profile: https://ecos.fws.gov/ecp/species/9045	Endangered
Tricolored Bat *Perimyotis subflavus* No critical habitat has been designated for this species. Species profile: https://ecos.fws.gov/ecp/species/10515	Proposed Endangered

INSECTS

NAME	STATUS
Monarch Butterfly *Danaus plexippus* No critical habitat has been designated for this species. Species profile: https://ecos.fws.gov/ecp/species/9743	Candidate

CRITICAL HABITATS

THERE ARE NO CRITICAL HABITATS WITHIN YOUR PROJECT AREA UNDER THIS OFFICE'S JURISDICTION.

YOU ARE STILL REQUIRED TO DETERMINE IF YOUR PROJECT(S) MAY HAVE EFFECTS ON ALL ABOVE LISTED SPECIES.

IPAC USER CONTACT INFORMATION

Agency:	SLR International Corporation
Name:	Meaghan Fogarty
Address:	195 Church St
Address Line 2:	7th Floor
City:	New Haven
State:	CT
Zip:	06510
Email	mfogarty@slrconsulting.com
Phone:	2033447885

United States Department of the Interior

FISH AND WILDLIFE SERVICE
New England Ecological Services Field Office
70 Commercial Street, Suite 300
Concord, NH 03301-5094
Phone: (603) 223-2541 Fax: (603) 223-0104

In Reply Refer To: 03/26/2024 19:13:31 UTC
Project code: 2022-0048850
Project Name: Quaker Farm Road Emergency Culvert Replacement

Federal Nexus: yes
Federal Action Agency (if applicable):

Subject: Technical assistance for 'Quaker Farm Road Emergency Culvert Replacement'

Dear Meaghan Fogarty:

This letter records your determination using the Information for Planning and Consultation (IPaC) system provided to the U.S. Fish and Wildlife Service (Service) on March 26, 2024, for 'Quaker Farm Road Emergency Culvert Replacement' (here forward, Project). This project has been assigned Project Code 2022-0048850 and all future correspondence should clearly reference this number. **Please carefully review this letter. Your Endangered Species Act (Act) requirements are not complete.**

Ensuring Accurate Determinations When Using IPaC

The Service developed the IPaC system and associated species' determination keys in accordance with the Endangered Species Act of 1973 (ESA; 87 Stat. 884, as amended; 16 U.S.C. 1531 et seq.) and based on a standing analysis. All information submitted by the Project proponent into IPaC must accurately represent the full scope and details of the Project.

Failure to accurately represent or implement the Project as detailed in IPaC or the Northern Long-eared Bat Rangewide Determination Key (Dkey), invalidates this letter. ***Answers to certain questions in the DKey commit the project proponent to implementation of conservation measures that must be followed for the ESA determination to remain valid.***

Determination for the Northern Long-Eared Bat

Based upon your IPaC submission and a standing analysis, your project is not reasonably certain to cause incidental take of the northern long-eared bat. Unless the Service advises you within 15 days of the date of this letter that your IPaC-assisted determination was incorrect, this letter verifies that the Action is not likely to result in unauthorized take of the northern long-eared bat.

Other Species and Critical Habitat that May be Present in the Action Area

The IPaC-assisted determination for the northern long-eared bat does not apply to the following ESA-protected species and/or critical habitat that also may occur in your Action area:

- Monarch Butterfly *Danaus plexippus* Candidate
- Tricolored Bat *Perimyotis subflavus* Proposed Endangered

You may coordinate with our Office to determine whether the Action may cause prohibited take of the animal species listed above. Note that if a new species is listed that may be affected by the identified action before it is complete, additional review is recommended to ensure compliance with the Endangered Species Act.

Next Step

Consultation with the Service is necessary. The project has a federal nexus (e.g., Federal funds, permit, etc.), but you are not the federal action agency or its designated (in writing) non-federal representative. Therefore, the ESA consultation status is incomplete and no project activities should occur until consultation between the Service and the Federal action agency (or designated non-federal representative), is completed.

As the federal agency or designated non-federal representative deems appropriate, they should submit their determination of effects to the Service by doing the following.

1. Log into IPaC using an agency email account and click on My Projects, click "Search by record locator" to find this Project using **372-140728183**. (Alternatively, the originator of the project in IPaC can add the agency representative to the project by using the Add Member button on the project home page.)
2. Review the answers to the Northern Long-eared Bat Range-wide Determination Key to ensure that they are accurate.
3. Click on Review/Finalize to convert the ‘not likely to adversely affect’ consistency letter to a concurrence letter. Download the concurrence letter for your files if needed.

If no changes occur with the Project or there are no updates on listed species, no further consultation/coordination for this project is required for the northern long-eared bat. However, the Service recommends that project proponents re-evaluate the Project in IPaC if: 1) the scope, timing, duration, or location of the Project changes (includes any project changes or amendments); 2) new information reveals the Project may impact (positively or negatively) federally listed species or designated critical habitat; or 3) a new species is listed, or critical habitat designated. If any of the above conditions occurs, additional coordination with the Service should take place before project implements any changes which are final or commits additional resources.

If you have any questions regarding this letter or need further assistance, please contact the New England Ecological Services Field Office and reference Project Code 2022-0048850 associated with this Project.

Action Description
You provided to IPaC the following name and description for the subject Action.

1. Name

Quaker Farm Road Emergency Culvert Replacement

2. Description

The following description was provided for the project 'Quaker Farm Road Emergency Culvert Replacement':

> Culvert Replacement Project

The approximate location of the project can be viewed in Google Maps: https://www.google.com/maps/@41.39579835,-72.00683216028287,14z

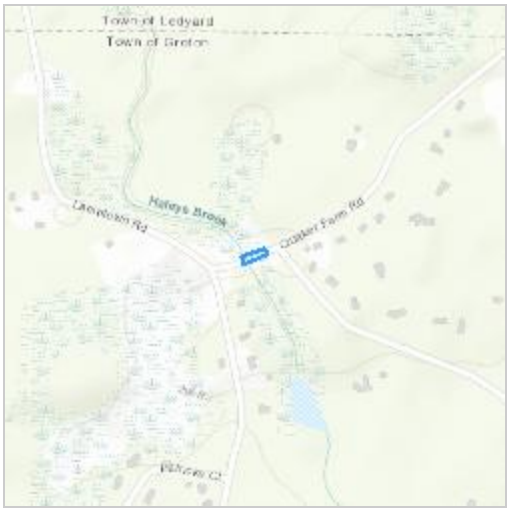

DETERMINATION KEY RESULT

Based on the answers provided, the proposed Action is consistent with a determination of “may affect, but not likely to adversely affect” for the Endangered northern long-eared bat (*Myotis septentrionalis*).

QUALIFICATION INTERVIEW

1. Does the proposed project include, or is it reasonably certain to cause, intentional take of the northern long-eared bat or any other listed species?

   Note: Intentional take is defined as take that is the intended result of a project. Intentional take could refer to research, direct species management, surveys, and/or studies that include intentional handling/encountering, harassment, collection, or capturing of any individual of a federally listed threatened, endangered or proposed species?

   No

2. Does any component of the action involve construction or operation of wind turbines?

   Note: For federal actions, answer ‘yes’ if the construction or operation of wind power facilities is either (1) part of the federal action or (2) would not occur but for a federal agency action (federal permit, funding, etc.).

   No

3. Is the proposed action authorized, permitted, licensed, funded, or being carried out by a Federal agency in whole or in part?

   Yes

4. Is the Federal Highway Administration (FHWA), Federal Railroad Administration (FRA), or Federal Transit Administration (FTA) funding or authorizing the proposed action, in whole or in part?

   No

5. Are you an employee of the federal action agency or have you been officially designated in writing by the agency as its designated non-federal representative for the purposes of Endangered Species Act Section 7 informal consultation per 50 CFR § 402.08?

   Note: This key may be used for federal actions and for non-federal actions to facilitate section 7 consultation and to help determine whether an incidental take permit may be needed, respectively. This question is for information purposes only.

   No

6. Is the lead federal action agency the Environmental Protection Agency (EPA) or Federal Communications Commission (FCC)? Is the Environmental Protection Agency (EPA) or Federal Communications Commission (FCC) funding or authorizing the proposed action, in whole or in part?

   No

7. Is the lead federal action agency the Federal Energy Regulatory Commission (FERC)?

   No

8. Have you determined that your proposed action will have no effect on the northern long-eared bat? Remember to consider the effects of any activities that would not occur but for the proposed action.

   If you think that the northern long-eared bat may be affected by your project or if you would like assistance in deciding, answer "No" below and continue through the key. If you have determined that the northern long-eared bat does not occur in your project's action area and/or that your project will have no effects whatsoever on the species despite the potential for it to occur in the action area, you may make a "no effect" determination for the northern long-eared bat.

   Note: Federal agencies (or their designated non-federal representatives) must consult with USFWS on federal agency actions that may affect listed species [50 CFR 402.14(a)]. Consultation is not required for actions that will not affect listed species or critical habitat. Therefore, this determination key will not provide a consistency or verification letter for actions that will not affect listed species. If you believe that the northern long-eared bat may be affected by your project or if you would like assistance in deciding, please answer "No" and continue through the key. Remember that this key addresses only effects to the northern long-eared bat. Consultation with USFWS would be required if your action may affect another listed species or critical habitat. The definition of Effects of the Action can be found here: https://www.fws.gov/media/northern-long-eared-bat-assisted-determination-key-selected-definitions

   No

9. [Semantic] Is the action area located within 0.5 miles of a known northern long-eared bat hibernaculum?

   Note: The map queried for this question contains proprietary information and cannot be displayed. If you need additional information, please contact your State wildlife agency.

   Automatically answered
   No

10. Does the action area contain any caves (or associated sinkholes, fissures, or other karst features), mines, rocky outcroppings, or tunnels that could provide habitat for hibernating northern long-eared bats?

    No

11. Does the action area contain or occur within 0.5 miles of (1) talus or (2) anthropogenic or naturally formed rock crevices in rocky outcrops, rock faces or cliffs?

    No

12. Is suitable summer habitat for the northern long-eared bat present within 1000 feet of project activities?
(If unsure, answer "Yes.")

    Note: If there are trees within the action area that are of a sufficient size to be potential roosts for bats (i.e., live trees and/or snags ≥3 inches (12.7 centimeter) dbh), answer "Yes". If unsure, additional information defining suitable summer habitat for the northern long-eared bat can be found at: https://www.fws.gov/media/northern-long-eared-bat-assisted-determination-key-selected-definitions

    Yes

13. Will the action cause effects to a bridge?

    No

14. Will the action result in effects to a culvert or tunnel?

    Yes

15. Do the interior dimensions of the culvert or tunnel equal or exceed 4.0 feet (1.3 meters) in height and 130 feet (40 meters) in length? Answer "No" if the affected culvert(s) or tunnel is smaller in either of these two dimensions.

    No

16. Does the action include the intentional exclusion of northern long-eared bats from a building or structure?

    Note: Exclusion is conducted to deny bats' entry or reentry into a building. To be effective and to avoid harming bats, it should be done according to established standards. If your action includes bat exclusion and you are unsure whether northern long-eared bats are present, answer "Yes." Answer "No" if there are no signs of bat use in the building/structure. If unsure, contact your local U.S. Fish and Wildlife Services Ecological Services Field Office to help assess whether northern long-eared bats may be present. Contact a Nuisance Wildlife Control Operator (NWCO) for help in how to exclude bats from a structure safely without causing harm to the bats (to find a NWCO certified in bat standards, search the Internet using the search term "National Wildlife Control Operators Association bats"). Also see the White-Nose Syndrome Response Team's guide for bat control in structures

    No

17. Does the action involve removal, modification, or maintenance of a human-made structure (barn, house, or other building) **known or suspected to contain roosting bats?**

    No

18. Will the action directly or indirectly cause construction of one or more new roads that are open to the public?

    Note: The answer may be yes when a publicly accessible road either (1) is constructed as part of the proposed action or (2) would not occur but for the proposed action (i.e., the road construction is facilitated by the proposed action but is not an explicit component of the project).

    No

19. Will the action include or cause any construction or other activity that is reasonably certain to increase average daily traffic on one or more existing roads?

    Note: For federal actions, answer 'yes' when the construction or operation of these facilities is either (1) part of the federal action or (2) would not occur but for an action taken by a federal agency (federal permit, funding, etc.). .

    No

20. Will the action include or cause any construction or other activity that is reasonably certain to increase the number of travel lanes on an existing thoroughfare?

    For federal actions, answer 'yes' when the construction or operation of these facilities is either (1) part of the federal action or (2) would not occur but for an action taken by a federal agency (federal permit, funding, etc.).

    No

21. Will the proposed action involve the creation of a new water-borne contaminant source (e.g., leachate pond pits containing chemicals that are not NSF/ANSI 60 compliant)?

    No

22. Will the proposed action involve the creation of a new point source discharge from a facility other than a water treatment plant or storm water system?

    No

23. Will the action include drilling or blasting?

    No

24. Will the action involve military training (e.g., smoke operations, obscurant operations, exploding munitions, artillery fire, range use, helicopter or fixed wing aircraft use)?

    No

25. Will the proposed action involve the use of herbicide or other pesticides (e.g., fungicides, insecticides, or rodenticides)?

    No

26. Will the action include or cause activities that are reasonably certain to cause chronic nighttime noise in suitable summer habitat for the northern long-eared bat? Chronic noise is noise that is continuous or occurs repeatedly again and again for a long time.

    Note: Additional information defining suitable summer habitat for the northern long-eared bat can be found at: https://www.fws.gov/media/northern-long-eared-bat-assisted-determination-key-selected-definitions

    No

27. Does the action include, or is it reasonably certain to cause, the use of artificial lighting within 1000 feet of suitable northern long-eared bat roosting habitat?

    Note: Additional information defining suitable roosting habitat for the northern long-eared bat can be found at: https://www.fws.gov/media/northern-long-eared-bat-assisted-determination-key-selected-definitions

    No

28. Will the action include tree cutting or other means of knocking down or bringing down trees, tree topping, or tree trimming?

    Yes

29. Does the action include emergency cutting or trimming of hazard trees in order to remove an imminent threat to human safety or property? See hazard tree note at the bottom of the key for text that will be added to response letters

    Note: A "hazard tree" is a tree that is an immediate threat to lives, public health and safety, or improved property and has a diameter breast height of six inches or greater.

    No

30. Are any of the trees proposed for cutting or other means of knocking down, bringing down, topping, or trimming suitable for northern long-eared bat roosting (i.e., live trees and/or snags ≥3 inches dbh that have exfoliating bark, cracks, crevices, and/or cavities)?

    No

31. Will the action result in the use of prescribed fire?

    No

32. Will the action cause noises that are louder than ambient baseline noises within the action area?

    No

PROJECT QUESTIONNAIRE

Enter the extent of the action area (in acres) from which trees will be removed - round up to the nearest tenth of an acre. For this question, include the entire area where tree removal will take place, even if some live or dead trees will be left standing.

0.1

Will all potential northern long-eared bat (NLEB) roost trees (trees ≥3 inches diameter at breast height, dbh) be cut, knocked, or brought down from any portion of the action area greater than or equal to 0.1 acre? If all NLEB roost trees will be removed from multiple areas, select ‘Yes’ if the cumulative extent of those areas meets or exceeds 0.1 acre.

No

Enter the extent of the action area (in acres) from which all potential NLEB roost trees will be removed. If all NLEB roost trees will be removed from multiple areas, entire the total extent of those areas. Round up to the nearest tenth of an acre.

0

For the area from which all potential northern long-eared bat (NLEB) roost trees will be removed, on how many acres (round to the nearest tenth of an acre) will trees be allowed to regrow? Enter ‘0’ if the entire area from which all potential NLEB roost trees are removed will be developed or otherwise converted to non-forest for the foreseeable future.

0

Will any snags (standing dead trees) ≥3 inches dbh be left standing in the area(s) in which all northern long-eared bat roost trees will be cut, knocked down, or otherwise brought down?

No

Will all project activities by completed by April 1, 2024?

No

IPAC USER CONTACT INFORMATION

Agency:	SLR International Corporation
Name:	Meaghan Fogarty
Address:	195 Church St
Address Line 2:	7th Floor
City:	New Haven
State:	CT
Zip:	06510
Email	mfogarty@slrconsulting.com
Phone:	2033447885

Appendix D SHPO & THPO Coordination Documentation

Quaker Farm Road Emergency Culvert Replacement

Application for Department of the Army, General Permit 19 Self-Verification Notification

Town of Groton

SLR Project No.: 141.11461.00018

April 10, 2024

From: Meaghan Fogarty
Sent on: June 02, 2022 11:03:47 AM
To: mary.dunne@ct.gov; mejohnson@mptn-nsn.gov; jquinn@moheganmail.com
CC: Matthew J. Sanford; Labadia, Catherine
Subject: SHPO Review Request - Quaker Farm Rd - Culvert Replacement
Attachments: Compiled_SHPO_THPO letter.pdf (8.2 MB)

Good morning,
Please find attached SHPO/THPO review request. A paper copy is being mailed today to the SHPO office to the attention of Environmental Review. We have cc'd the THPO's on this e-mail inquiry as well.
Feel free to reach out to me with any questions regarding the attached form and supporting materials.
Thank You,
Meaghan Fogarty

SLR

Meaghan Fogarty

O 203-344-7885
E mfogarty@slrconsulting.com

195 Church St.,New Haven,CT06510

Follow us on LinkedIn

Winners: RoSPA President's Award 2020

Confidentiality Notice and Disclaimer
This communication and any attachment(s) contain information which is confidential and may also be legally privileged. It is intended for the exclusive use of the recipient(s) to whom it is addressed. If you have received this communication in error, please e-mail us by return e-mail and then delete the e-mail from your system together with any copies of it. Any views or opinions are solely those of the author and do not represent those of SLR Management Ltd, or any of its subsidiaries, unless specifically stated.

July 5, 2022

Matthew Sanford
SLR International Corporation
99 Realty Drive
Cheshire, CT 06410
(sent via email only to msanford@slrconsulting.com)

Subject: Culvert Replacement
Quaker Farm Road
Groton, Connecticut

Dear Mr. Sanford,

The State Historic Preservation Office (SHPO) has reviewed the referenced project in response to your request for our comments regarding potential effects to historic properties. SHPO understands that the Town of Groton plans to replace the culvert carrying Quaker Farm Road over Haleys Brook. The existing crossing, constructed around 1945, consists of twin corrugated metal pipes with masonry headwalls and wingwalls. It will be replaced with a precast concrete three-sided box culvert. The review request is in support of permit applications to the United States Army Corps of Engineers.

There are no reported archeological sites in the vicinity of the proposed undertaking and it is unlikely that the proposed project would disturb significant archeological resources because construction will be confined to previously disturbed soils. The Quaker Farm Road culvert is an attractive example of a mid-twentieth century stream crossing with modest rustication to resemble an earlier masonry form. At this time, SHPO does not consider this structure eligible for inclusion on the National Register of Historic Places applying the criteria for evaluation (36CFR 60.4[a-d]). This culvert type may require additional evaluation in the future. Project plans indicate that the replacement bridge will have a simulated masonry parapet. SHPO recommends, if possible, that the existing material be made into a veneer and reused to the greatest extent possible in the new construction, including the parapet and wingwalls. Based on the information provided to our office, it is SHPO's opinion that no historic properties will be affected by this undertaking.

This office appreciates the opportunity to review and comment upon this project. These comments are provided in accordance with Section 106 of the National Historic Preservation Act, as amended. For additional information, please contact Catherine Labadia, Staff Archaeologist and Deputy State Historic Preservation Officer, at (860) 500-2329 or catherine.labadia@ct.gov.

Sincerely,

Jonathan Kinney
State Historic Preservation Officer

cc: Fogarty, SLR

Appendix E Photographic Log

Quaker Farm Road Emergency Culvert Replacement

Application for Department of the Army, General Permit 19 Self-Verification Notification

Town of Groton

SLR Project No.: 141.11461.00018

April 10, 2024

SLR

PHOTOGRAPHIC LOG

Client Name:	**Site Location:**	**Project No.**
Town of Groton	Quaker Farm Road, Groton, Connecticut	141.11461.00018

Photo No.	**Date:**
1	07/16/2021

Direction Photo Taken:
South

Description:
Palustrine scrub shrub wetland and Haleys Brook. Photo taken from Quaker Farm Road looking downstream.

Photo No.	**Date:**
2	07/16/2021

Direction Photo Taken:
East

Description:
Photo taken from above culvert looking east toward Quaker Farm Road.

SLR

PHOTOGRAPHIC LOG

Client Name:	**Site Location:**	**Project No.**
Town of Groton	Quaker Farm Road, Groton, Connecticut	141.11461.00018

Photo No.	**Date:**
3	07/16/2021

Direction Photo Taken:
West

Description:
Photo of unnamed stream looking up stream. This watercourse drains into Haleys Brook approximately 50 feet south of Quaker Farm Road.

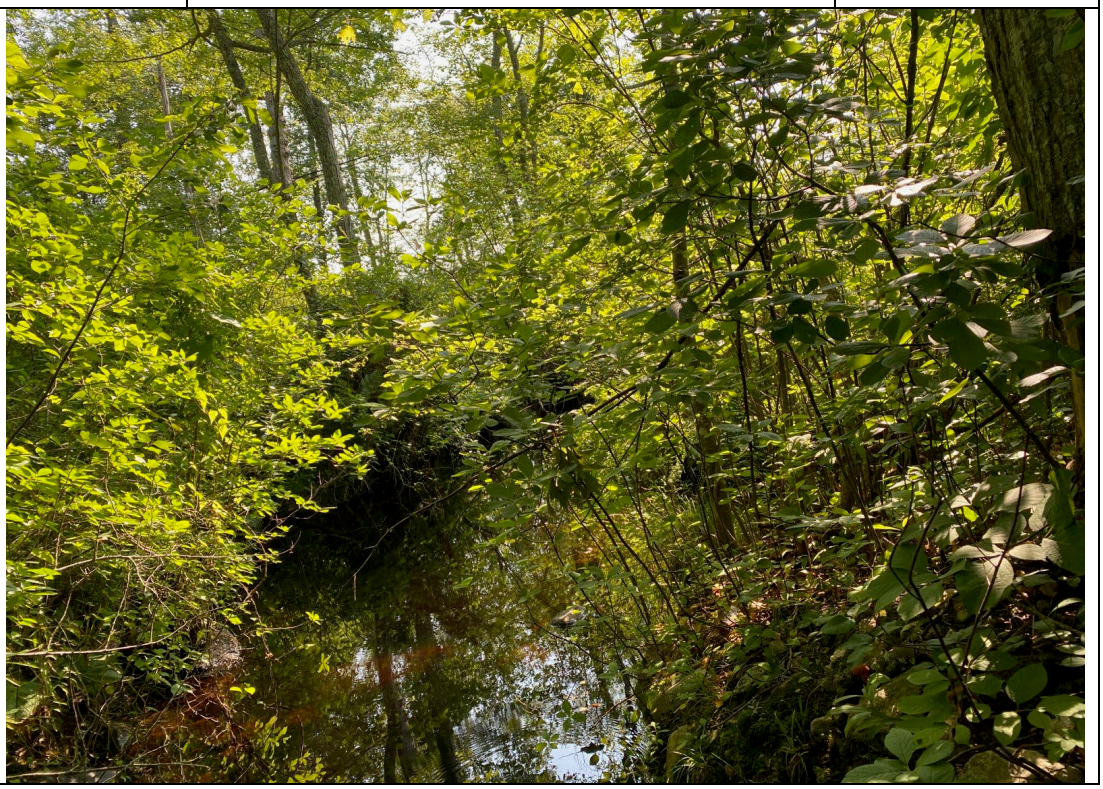

Photo No.	**Date:**
4	07/16/2021

Direction Photo Taken:
West

Description:
36-inch metal culvert draining an unnamed stream beneath Lambtown Road into the Palustrine Scrub Shrub Wetland and Haleys Brook downstream of the project area.

SLR

PHOTOGRAPHIC LOG

Client Name:	**Site Location:**	**Project No.**
Town of Groton	Quaker Farm Road, Groton, Connecticut	141.11461.00018

Photo No.	**Date:**
5	07/16/2021

Direction Photo Taken:
North

Description:
Photo of palustrine emergent wetland and Haleys Brook upstream of the Quaker Farm Road culvert.

Photo No.	**Date:**
6	7/16/2021

Direction Photo Taken:
Southeast

Description:
Two 48-inch metal culverts carrying Haleys Brook beneath Quaker Farm Road.

Appendix F Project Site Plans

Quaker Farm Road Emergency Culvert Replacement

Application for Department of the Army, General Permit 19 Self-Verification Notification

Town of Groton

SLR Project No.: 141.11461.00018

April 10, 2024

REPLACEMENT OF BRIDGE NO. 058015
QUAKERFARM ROAD OVER HALEYS BROOK

QUAKER FARM ROAD
GROTON, CONNECTICUT

CTDOT PROJECT NO. 9058-0015
SLR PROJECT NO. 141.11461.00018
MAY 1, 2022

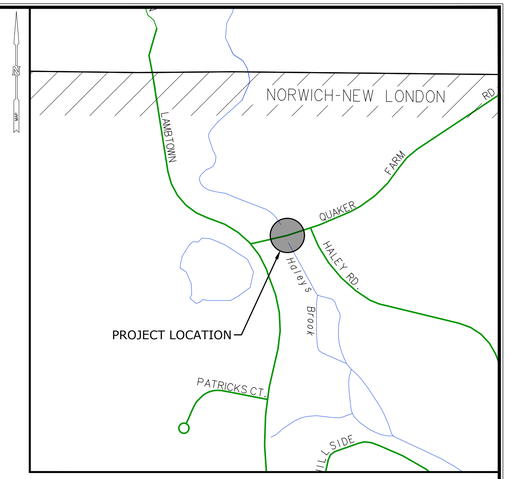

LOCATION MAP:

LIST OF DRAWINGS

NO.	NAME	TITLE
01	--	TITLE SHEET
02	N-01	NOTES & LEGEND
03	EX-01	EXISTING CONDITIONS & BASELINE INFORMATION
04	EX-02	REMOVALS PLAN
05	RWY-01	ROADWAY PLAN
06	PRO-01	ROADWAY & CHANNEL PROFILE
07	ROW-01	RIGHTS -OF-WAY PLAN
08	SE-01	SEDIMENT & EROSION CONTROL PLAN
09	STR-01	BRIDGE PLAN, ELEVATION & TYPICAL SECTION
10	STR-02	BORING LOGS
11 - 12	MPT-01 TO MPT-02	STAGED CONSTRUCTION PLAN
13 - 15	XSC-01 TO XSC-03	ROADWAY CROSS SECTIONS

CTDOT STANDARD HIGHWAY SHEETS

HW-INX_1	HIGHWAY STANDARD SHEET INDEX
HW-INX_2	HIGHWAY STANDARD SHEET INDEX
HW-0506_01	ENDWALLS, SLOPE PAVED INLETS AND OUTLETS
HW-05-07_07	TYPE "C" & "C-L" CATCH BASIN TOPS AND CURBS
HW-05-07_08	CATCH BASIN FRAMES AND GRATES
HW-910_20	MASH W-BEAM HARDWARE
HW-910_21	METAL BEAM RAIL (R-B MASH) GUIDERAIL
HW-910_26	THRIE-BEAM ATTACHMENT HARDWARE
HW-910_27	THRIE-BEAM ATTACHMENT
HW-911_01	R-B END ANCHORAGE TYPE I AND II

CTDOT STANDARD TRAFFIC SHEETS

TR-STD_INDEX	TRAFFIC STANDARD SHEET INDEX
TR_1208_02	METAL SIGN POSTS AND SIGN MOUNTING DETAILS
TR_1220_01	SIGNS FOR CONSTRUCTION AND PERMIT OPERATIONS
TR_1220_02	CONSTRUCTION SIGN SUPPORTS AND CHANNELIZING DEVICES
TR-1208_01	SIGN PLACEMENT AND RETROREFLECTIVE STRIP DETAILS
TR-1210_04	PAVEMENT MARKING LINES AND SYMBOLS
TR-1220_01	SIGNS FOR CONSTRUCTION AND PERMIT OPERATIONS

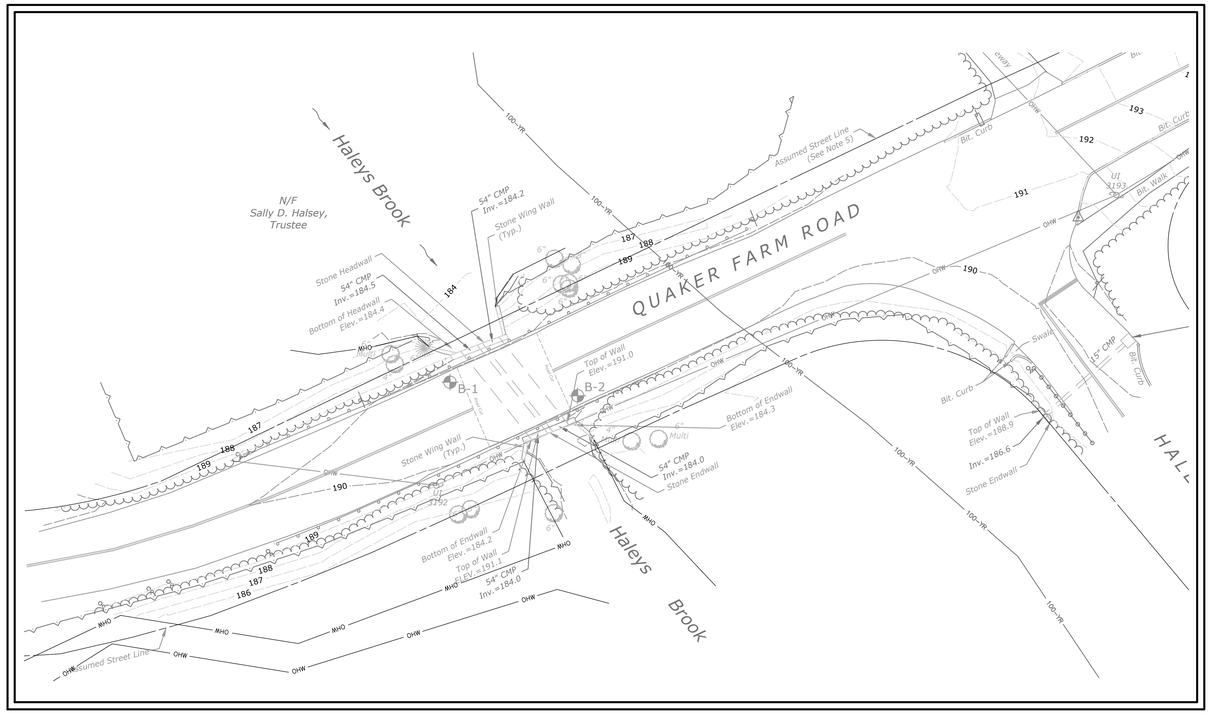

PROJECT SITE VICINITY MAP:

0' 10' 20'
0 1/2" 1"
SCALE 1" = 20'

PREPARED FOR:

TOWN OF GROTON
45 FORT HILL ROAD
GROTON, CONNECTICUT 06340

PREPARED BY:

SLR
99 REALTY DRIVE
CHESHIRE, CT 06410
203.271.1773
SLRCONSULTING.COM

811
Know what's **below.**
Call before you dig.
www.cbyd.com

Copyright SLR International Corporation - 2021

GENERAL NOTES

1. SLR CONSULTING ACCEPTS NO RESPONSIBILITY FOR THE ACCURACY OF MAPS AND DATA WHICH HAVE BEEN SUPPLIED BY OTHERS.
2. WETLAND LIMITS SHOWN HAVE BEEN DELINEATED ON JULY 16, 2021 BY MATTHEW SANFORD, RSS, PWS, OF SLR CONSULTING. THE CONTRACTOR SHALL PERFORM ALL WORK IN ACCORDANCE WITH THE "BEST MANAGEMENT PRACTICES FOR THE PROTECTION OF THE ENVIRONMENT" AS OUTLINED IN THE STANDARD SPECIFICATIONS.
3. THE PROPERTY LINES DEPICTED HAVE BEEN COMPILED FROM VARIOUS SOURCES INCLUDING TOWN OF GROTON LAND RECORDS AND ARE NOT TO BE CONSTRUED AS BEING OBTAINED AS THE RESULT OF A FIELD SURVEY, NOR DO THEY REPRESENT A PROPERTY/BOUNDARY OPINION.
4. ALL CONSTRUCTION MATERIALS AND METHODS SHALL CONFORM TO THE APPLICABLE SECTIONS OF THE STATE OF CONNECTICUT DEPARTMENT OF TRANSPORTATION STANDARD SPECIFICATIONS FOR ROADS, BRIDGES, FACILITIES AND INCIDENTAL CONSTRUCTION, FORM 818 (2020), SUPPLEMENTAL SPECIFICATIONS DATED JANUARY 2022, AND SPECIAL PROVISIONS.
5. THE CONTRACTOR SHALL BE AWARE OF THE WORK WHICH IS TO BE PERFORMED WITHIN AND ADJACENT TO PRIVATE PROPERTY RIGHT-OF-WAYS.
6. SEDIMENT AND EROSION CONTROL MEASURES AS DEPICTED ON THESE PLANS AND DESCRIBED WITHIN THE SEDIMENT AND EROSION CONTROL NARRATIVE SHALL BE IMPLEMENTED AND MAINTAINED UNTIL PERMANENT COVER AND STABILIZATION IS ESTABLISHED. ALL SEDIMENT AND EROSION CONTROL MEASURES SHALL CONFORM TO THE "GUIDELINES FOR SOIL EROSION AND SEDIMENT CONTROL, CONNECTICUT - REVISED 2002", AND IN ALL CASES BEST MANAGEMENT PRACTICES SHALL PREVAIL.
7. THE PLANS REQUIRE A CONTRACTOR'S WORKING KNOWLEDGE OF LOCAL, MUNICIPAL, WATER AUTHORITY, AND STATE CODES FOR UTILITY SYSTEMS. ANY CONFLICTS BETWEEN MATERIALS AND LOCATIONS SHOWN, AND LOCAL REQUIREMENTS SHALL BE BROUGHT TO THE ATTENTION OF THE ENGINEER PRIOR TO THE EXECUTION OF WORK. THE MUNICIPALITY WILL NOT BE HELD LIABLE FOR COSTS INCURRED TO IMPLEMENT OR CORRECT WORK WHICH DOES NOT CONFORM TO LOCAL CODE.
8. ALL FUEL, OIL, PAINT, OR OTHER HAZARDOUS MATERIALS SHOULD BE STORED IN A SECONDARY CONTAINER AND REMOVED TO A LOCKED INDOOR AREA WITH AN IMPERVIOUS FLOOR DURING NON-WORK HOURS.
9. CONSTRUCTION EQUIPMENT SHALL BE STORED OUTSIDE OF AREAS SUBJECT TO FLOODING.

UTILITIES

1. THE CONTRACTOR SHALL COORDINATE CONSTRUCTION WITH APPROPRIATE UTILITY COMPANIES REGARDING RELOCATION AND PROTECTION OF THEIR FACILITIES AND SCHEDULING OF SUCH WORK.

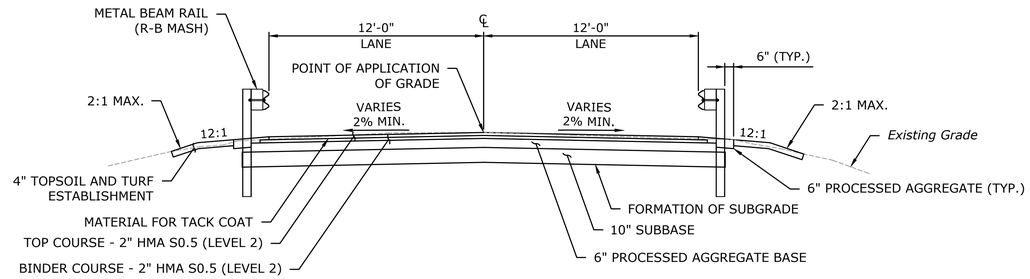

TYPICAL ROADWAY SECTION

SCALE: ¼" = 1'-0"

LEGEND

EXISTING		PROPOSED
	STREET LINE (G.I.S.)	
	PROPERTY LINE (G.I.S.)	
155	CONTOUR	155
×70	SPOT GRADE	+70.5
	WATERCOURSE	
	ORDINARY HIGH WATER	
	FEDERAL/STATE WETLAND & ORDINARY HIGH WATER	
	TREELINE	
	TREE	
	SHRUB	
	WIRE FENCE	
	GUIDERAIL	
OHW	OVERHEAD WIRE	
	CATCH BASIN	
	POST	
	UTILITY POLE	
	SIGN	
	CONTROL POINT	
	MAILBOX	
	CURB	
	CONSTRUCTION EASEMENT LINE	
	SEDIMENTATION EROSION CONTROL SYSTEM	
	CUT LIMIT	C
	FILL LIMIT	F
	BORING	B-1

STATE PROJECT NO. 9058-0015

Shelley E. Plude

P.E. CT# 0030683

SLR
99 REALTY DRIVE
CHESHIRE, CT 06410
203.271.1773
SLRCONSULTING.COM

DESCRIPTION	DATE	BY

NOTES & LEGEND

REPLACEMENT OF BRIDGE NO. 058015
QUAKERFARM ROAD OVER HALEYS BROOK

QUAKER FARM ROAD
GROTON, CONNECTICUT

SEP	WRS	SEP
DESIGNED	DRAWN	CHECKED

SCALE: AS SHOWN

DATE: MAY 1, 2022

PROJECT NO.: 141.11461.00018

DRAWING NO.: N-01

SHEET NO.: 02

Copyright SLR International Corporation - 2021

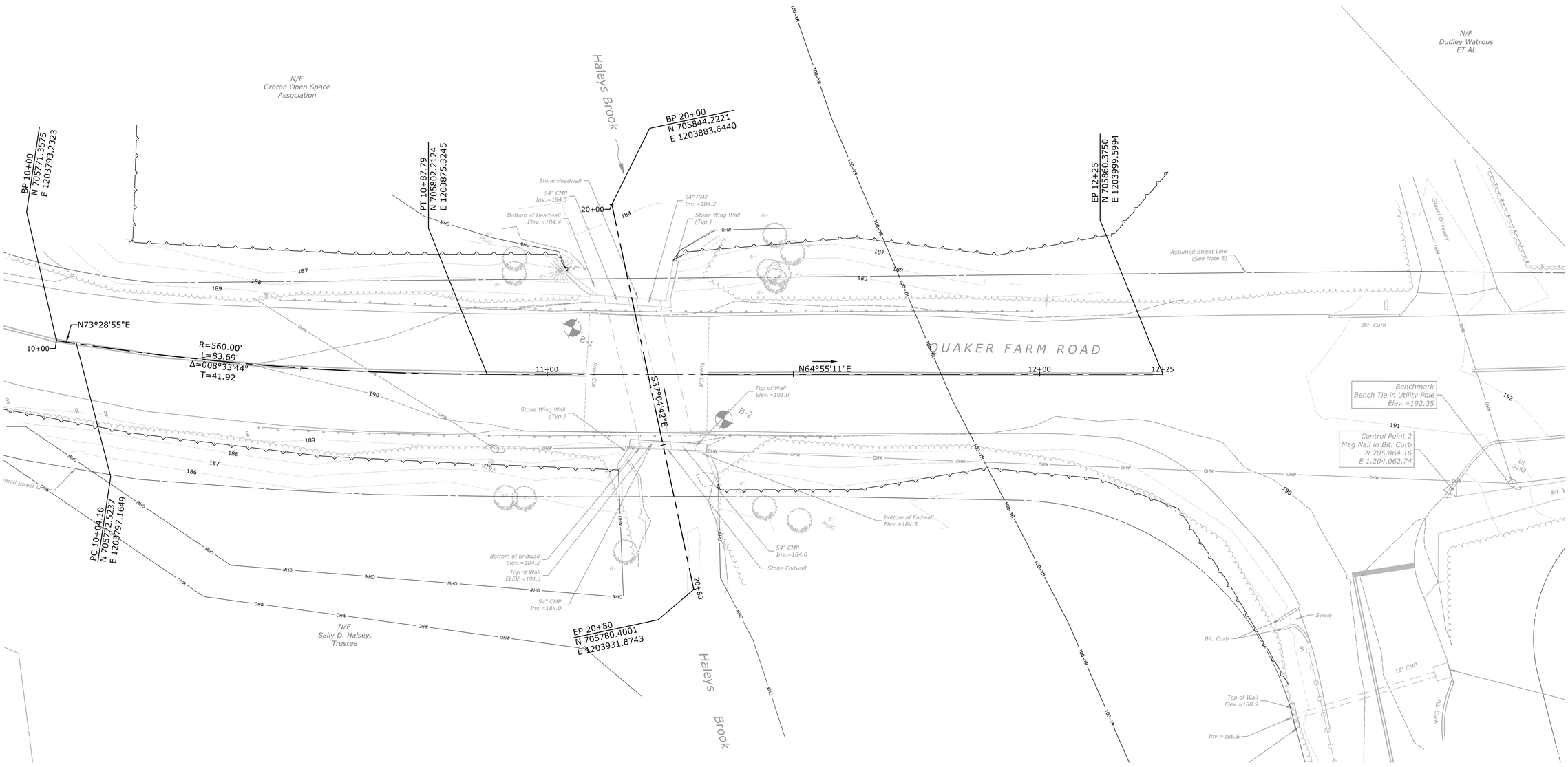

NOTES:

1. THIS SURVEY HAS BEEN PREPARED PURSUANT TO THE REGULATIONS OF CONNECTICUT STATE AGENCIES SECTIONS 20-300b-1 THROUGH 20-300b-20 AND THE "STANDARDS AND SUGGESTED METHODS AND PROCEDURES FOR SURVEYS AND MAPS IN THE STATE OF CONNECTICUT" AS ADOPTED BY THE CONNECTICUT ASSOCIATION OF LAND SURVEYORS, INC. ON AUGUST 29, 2019. IT IS A TOPOGRAPHIC SURVEY CONFORMING TO TOPOGRAPHIC ACCURACY CLASS T-2.

2. NORTH BASED UPON THE CONNECTICUT COORDINATE SYSTEM (NAD 1983).

3. ELEVATIONS, CONTOURS, AND BENCHMARK ARE BASED UPON NAVD 1988.

4. ALL UNDERGROUND UTILITIES MAY NOT BE SHOWN. UNDERGROUND UTILITY, STRUCTURE AND FACILITY LOCATIONS DEPICTED HEREON HAVE BEEN COMPILED, IN PART, FROM RECORD MAPPING AND OTHER DATA SUPPLIED BY RESPECTIVE UTILITY COMPANIES, GOVERNMENTAL AGENCIES AND/OR OTHER SOURCES. THESE LOCATIONS MUST BE CONSIDERED APPROXIMATE IN NATURE. ADDITIONALLY, OTHER SUCH FEATURES MAY EXIST ON THE SITE, THE EXISTENCE OF WHICH ARE UNKNOWN TO SLR INTERNATIONAL CORPORATION THE EXISTENCE, SIZE AND LOCATION OF ALL SUCH FEATURES MUST BE DETERMINED AND VERIFIED IN THE FIELD BY THE APPROPRIATE AUTHORITIES PRIOR TO BEGINNING CONSTRUCTION."CALL BEFORE YOU DIG" DIAL 811 OR 1-800-922-4455.

5. REFERENCE IS MADE TO "PERIMETER PROPERTY SURVEY PREPARED FOR THE GROTON OPEN SPACE ASSOCIATION, INC. OF THE LAND OF JULIA A. WEBER LAMBTOWN ROAD GROTON & LEDYARD CONNECTICUT" BY ERIC SEITZ, SCALE: 1"=200', MARCH 2014, SHEET 2 OF 2 (G.L.R. MAP S30-256)

STATE PROJECT NO. 9058-0015

Shelley E. Plude

P.E. CT# 0030683

SLR
99 REALTY DRIVE
CHESHIRE, CT 06410
203.271.1773
SLRCONSULTING.COM

DESCRIPTION	DATE	BY

EXISTING CONDITIONS & BASELINE INFORMATION

REPLACEMENT OF BRIDGE NO. 058015
QUAKERFARM ROAD OVER HALEYS BROOK

QUAKER FARM ROAD
GROTON, CONNECTICUT

SEP	WRS	SEP
DESIGNED	DRAWN	CHECKED

SCALE: 1" = 10'

DATE: MAY 1, 2022

PROJECT NO.: 141.11461.00018

DRAWING NO.: EX-01

SHEET NO.: 03

Copyright SLR International Corporation - 2021

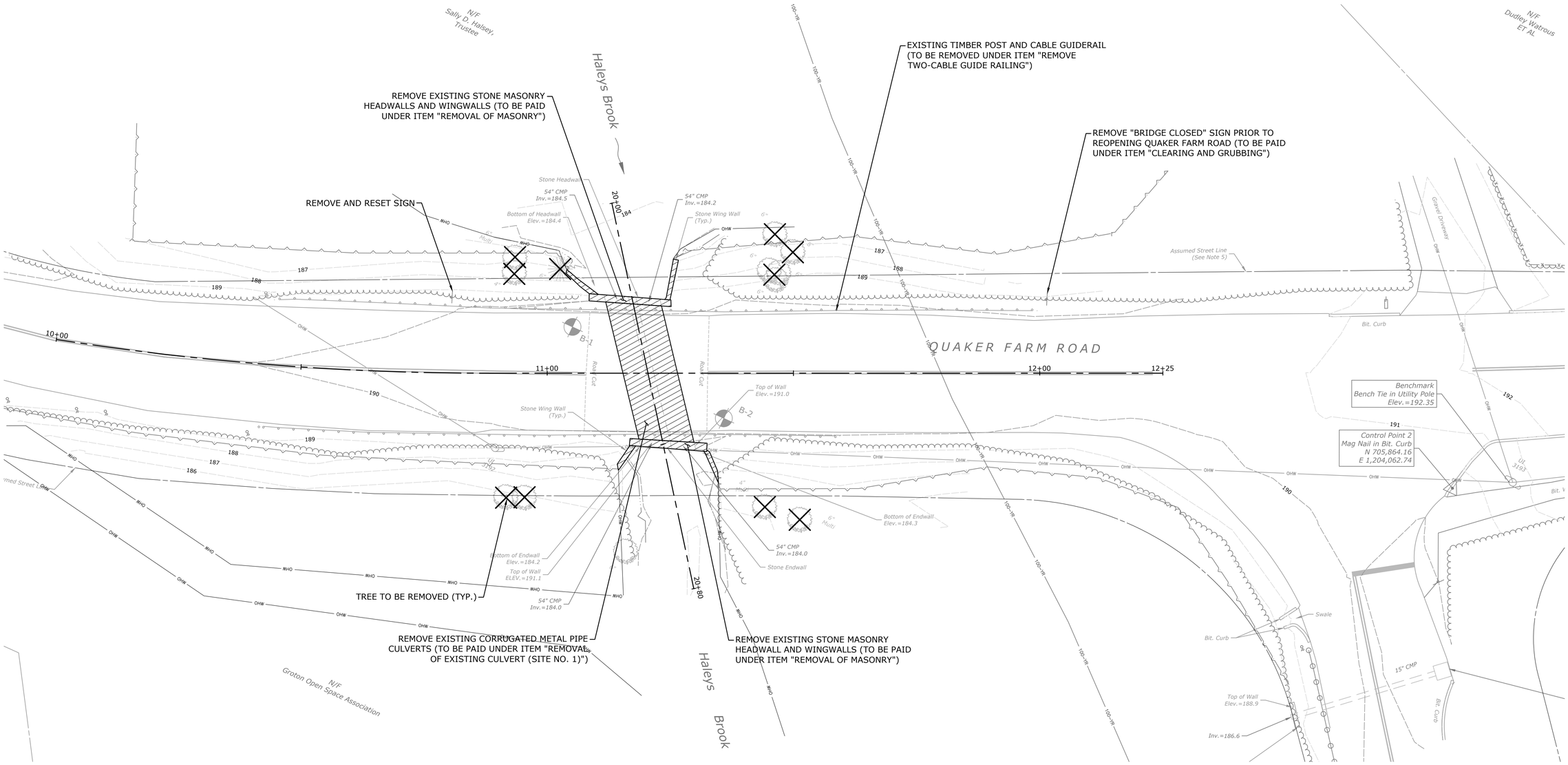

NOTES:

1. CONTRACTOR RESPONSIBLE FOR CUTTING TREES. STUMPS TO REMAIN OUTSIDE OF EXCAVATION LIMITS.

STATE PROJECT NO. 9058-0015

Shelley E. Plude

P.E. CT# 0030683

SLR
99 REALTY DRIVE
CHESHIRE, CT 06410
203.271.1773
SLRCONSULTING.COM

DESCRIPTION	DATE	BY

REMOVALS PLAN

REPLACEMENT OF BRIDGE NO. 058015
QUAKERFARM ROAD OVER HALEYS BROOK

QUAKER FARM ROAD
GROTON, CONNECTICUT

SEP	WRS	SEP
DESIGNED	DRAWN	CHECKED

SCALE: 1" = 10'

DATE: MAY 1, 2022

PROJECT NO.: 141.11461.00018

DRAWING NO.: EX-02

SHEET NO.: 04

Copyright SLR International Corporation - 2021

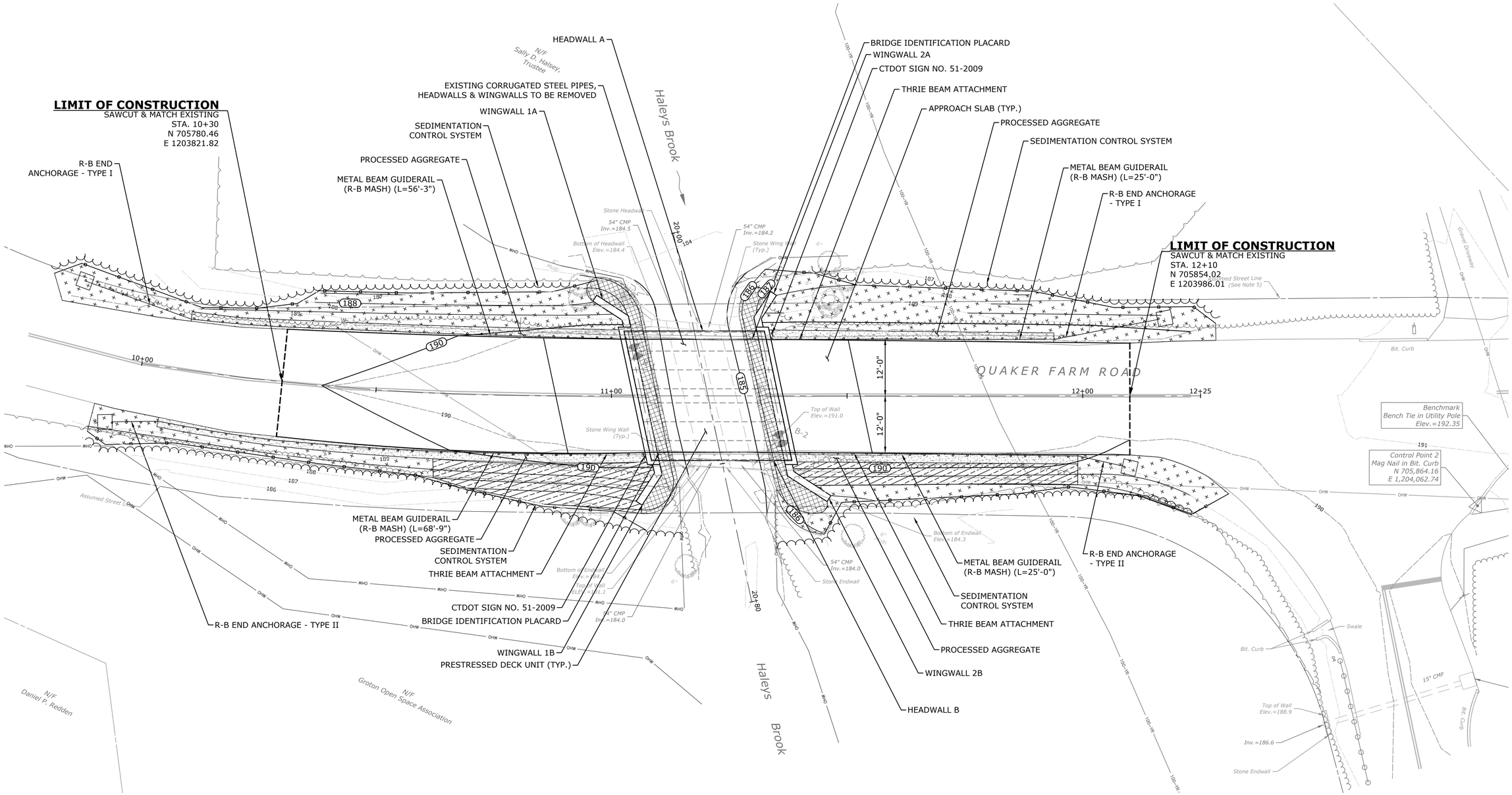

SCHEDULE OF SIGNS

CTDOT SIGN NO.	SIZE	LEGEND	LOCATION	ALUMINUM THICKNESS	POSTS	BACKGROUND COLOR	LEGEND COLOR
51-2009	18"x12"	HALEYS BROOK	STA. 11+07±, 13.0'± R	0.0800	1	GREEN	WHITE
N/A	12"x4"	058015	STA. 11+10±, 12.0± R	N/A	N/A	GREEN	WHITE
51-2009	18"x12"	HALEYS BROOK	STA. 11+30±, 12.0'± L	0.0800	1	GREEN	WHITE
N/A	12"x4"	058015	STA. 11+34±, 13.0'± L	N/A	N/A	GREEN	WHITE

HALEYS BROOK 12" 18"

CTDOT SIGN NO. 51-2009
NOT TO SCALE

058015 4" 12"

BRIDGE IDENTIFICATION PLACARD
NOT TO SCALE

BRIDGE IDENTIFICATION PLACARDS:

THE CONTRACTOR SHALL PROVIDE AND INSTALL NEW BRIDGE IDENTIFICATION PLACARDS ON THE SIGN POST BELOW SIGN 51-2009 ON THE LEADING ENDS OF THE BRIDGE AS INDICATED ON THE PLANS. THE SIGNS SHALL BE FABRICATED WITH 40 GAUGE ALUMINUM SHEET METAL. THE SIGNS SHALL BE 4"x12" WITH 3" WHITE REFLECTIVE BLOCK LETTERS ON GREEN REFLECTIVE SHEETING. EACH SIGN SHALL READ: 058015. THE FINAL LOCATION AND ATTACHMENT METHOD FOR THE SIGN SHALL BE APPROVED BY THE ENGINEER PRIOR TO INSTALLATION. ALL COSTS ASSOCIATED WITH PROVIDING AND INSTALLING THE BRIDGE IDENTIFICATION PLACARDS SHALL BE PAID UNDER THE ITEM #1208931 - SIGN FACE - SHEET ALUMINUM (TYPE IX RETROREFLECTIVE SHEETING).

SIGN NOTES:

1. POSTS - SEE STANDARD SHEET TR-1208_02 - "METAL SIGN POSTS AND SIGN MOUNTING DETAILS."
2. POSTS SHALL BE 4 LB/FT.
3. SIGNS SHALL BE FABRICATED FROM ONE CONTINUOUS PIECE OF SHEET ALUMINUM. SPLICING OF SHEET ALUMINUM WILL NOT BE ACCEPTED.
4. SIGNS SHALL BE PAID FOR UNDER ITEM "SIGN FACE - SHEET ALUMINUM (TYPE IX RETROREFLECTIVE SHEETING)".

LEGEND

- TOPSOIL & CONSERVATION SEEDING FOR SLOPES
- EROSION CONTROL MATTING & CONSERVATION SEEDING FOR SLOPES
- ROUNDED RIPRAP OVERLAIN WITH NATIVE STREAMBED MATERIAL
- PROCESSED AGGREGATE

STATE PROJECT NO. 9058-0015

Shelley E. Plude
P.E. CT# 0030683

SLR
99 REALTY DRIVE
CHESHIRE, CT 06410
203.271.1773
SLRCONSULTING.COM

DESCRIPTION	DATE	BY

ROADWAY PLAN

REPLACEMENT OF BRIDGE NO. 058015
QUAKERFARM ROAD OVER HALEYS BROOK

QUAKER FARM ROAD
GROTON, CONNECTICUT

SEP	WRS	SEP
DESIGNED	DRAWN	CHECKED

SCALE: 1"=10'
DATE: MAY 1, 2022
PROJECT NO.: 141.11461.00018
DRAWING NO.: RWY-01
SHEET NO.: 05

Copyright SLR International Corporation - 2021

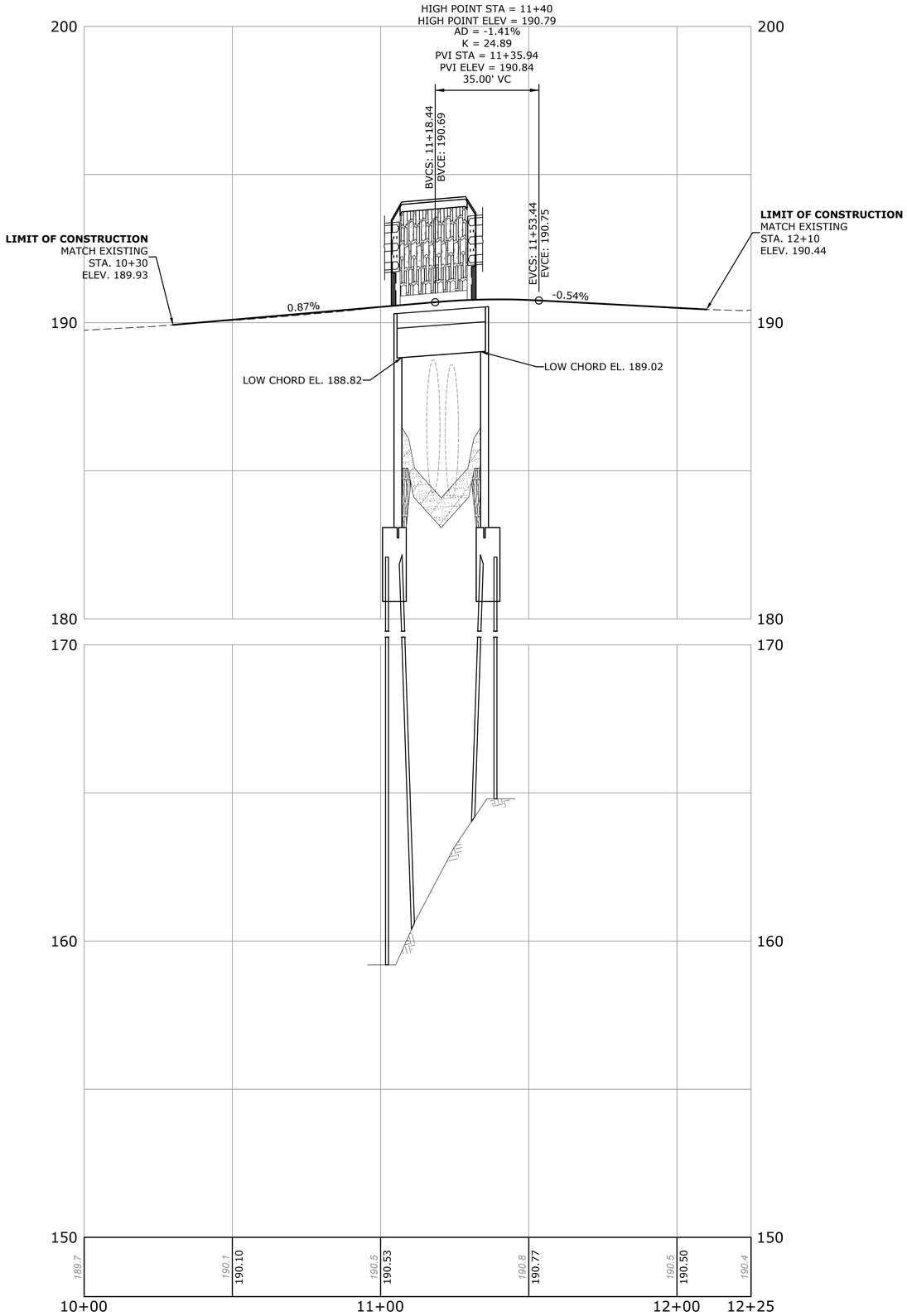

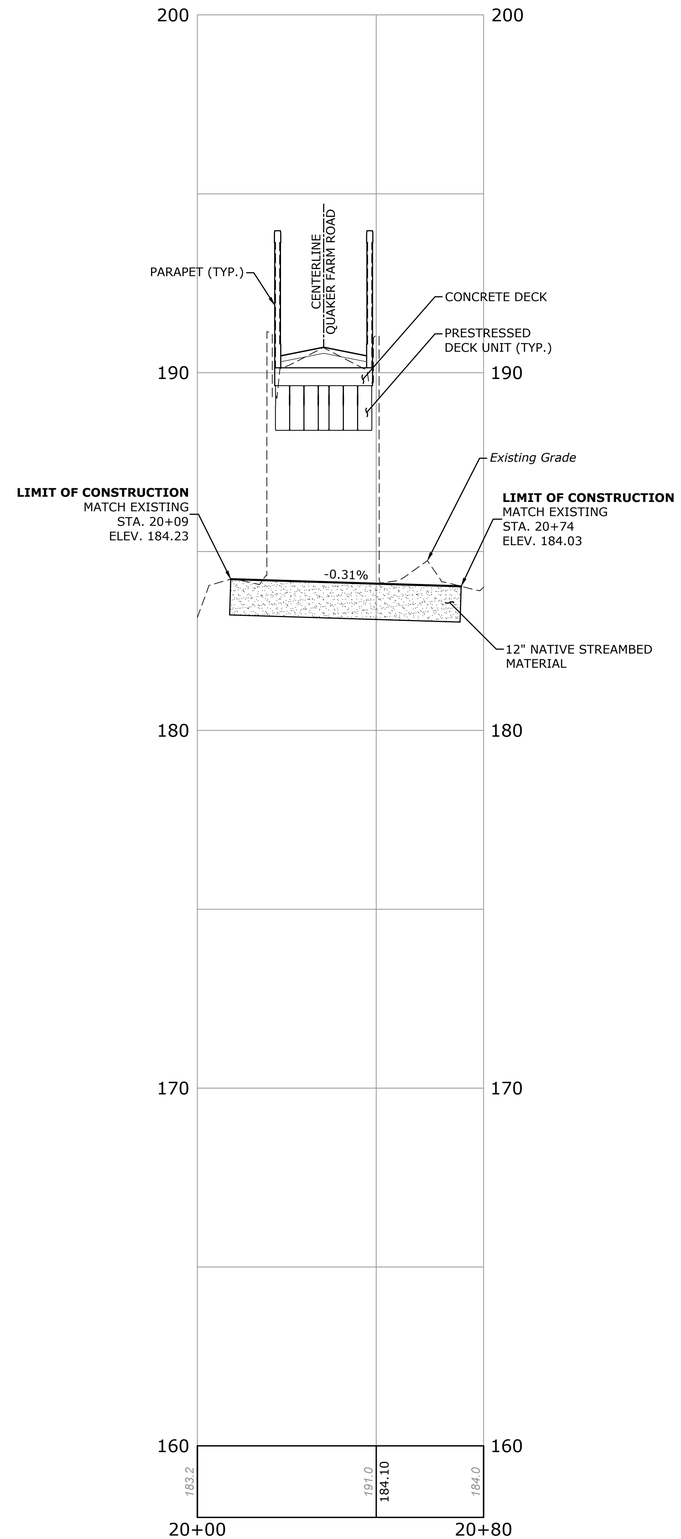

STATE PROJECT NO. 9058-0015

Shelley E. Plude

P.E. CT# 0030683

SLR

99 REALTY DRIVE
CHESHIRE, CT 06410
203.271.1773
SLRCONSULTING.COM

DESCRIPTION	DATE	BY

ROADWAY & CHANNEL PROFILE

REPLACEMENT OF BRIDGE NO. 058015
QUAKERFARM ROAD OVER HALEYS BROOK

QUAKER FARM ROAD
GROTON, CONNECTICUT

SEP	WRS	SEP
DESIGNED	DRAWN	CHECKED

SCALE: 1"=20'

DATE: MAY 1, 2022

PROJECT NO.: 141.11461.00018

DRAWING NO.: PRO-01

SHEET NO.: 06

Copyright SLR International Corporation - 2021

PROPERTY ACQUISITION LEGEND

Ⓐ	CONSTRUCTION EASEMENT FOR THE PURPOSE OF STORAGE OF EQUIPMENT AND MATERIALS, INSTALLATION OF TEMPORARY SEDIMENTATION & EROSION CONTROL SYSTEM, PLACEMENT OF TOPSOIL AND TURF ESTABLISHMENT, REMOVAL OF TREES AND INSTALLATION OF PROPOSED PLANTINGS DURING REPLACEMENT OF BRIDGE NO. 058015 QUAKER FARM ROAD OVER HALEYS BROOK CONSTRUCTION EASEMENT TAKEN UNDER THIS PARAGRAPH WILL BE RESTORED BY REMOVING ALL TEMPORARY CONSTRUCTION EQUIPMENT AND BY GRADING AND SEEDING ANY DISTURBED AREAS. SAID EASEMENT WILL BE EXTINGUISHED UPON COMPLETION OF THE PROJECT, UNLESS SOONER EXTINGUISHED BY THE STATE.
Ⓑ	CONSTRUCTION EASEMENT FOR THE PURPOSE OF STORAGE OF EQUIPMENT AND MATERIALS, INSTALLATION OF TEMPORARY SEDIMENTATION & EROSION CONTROL SYSTEM, REMOVAL OF TREES, PLACEMENT OF RIPRAP, AND CONSTRUCTION OF STONE WALL DURING REPLACEMENT OF BRIDGE NO. 058015 QUAKER FARM ROAD OVER HALEYS BROOK. CONSTRUCTION EASEMENT TAKEN UNDER THIS PARAGRAPH WILL BE RESTORED BY REMOVING ALL TEMPORARY CONSTRUCTION EQUIPMENT AND BY GRADING AND SEEDING ANY DISTURBED AREAS. SAID EASEMENT WILL BE EXTINGUISHED UPON COMPLETION OF THE PROJECT, UNLESS SOONER EXTINGUISHED BY THE STATE.

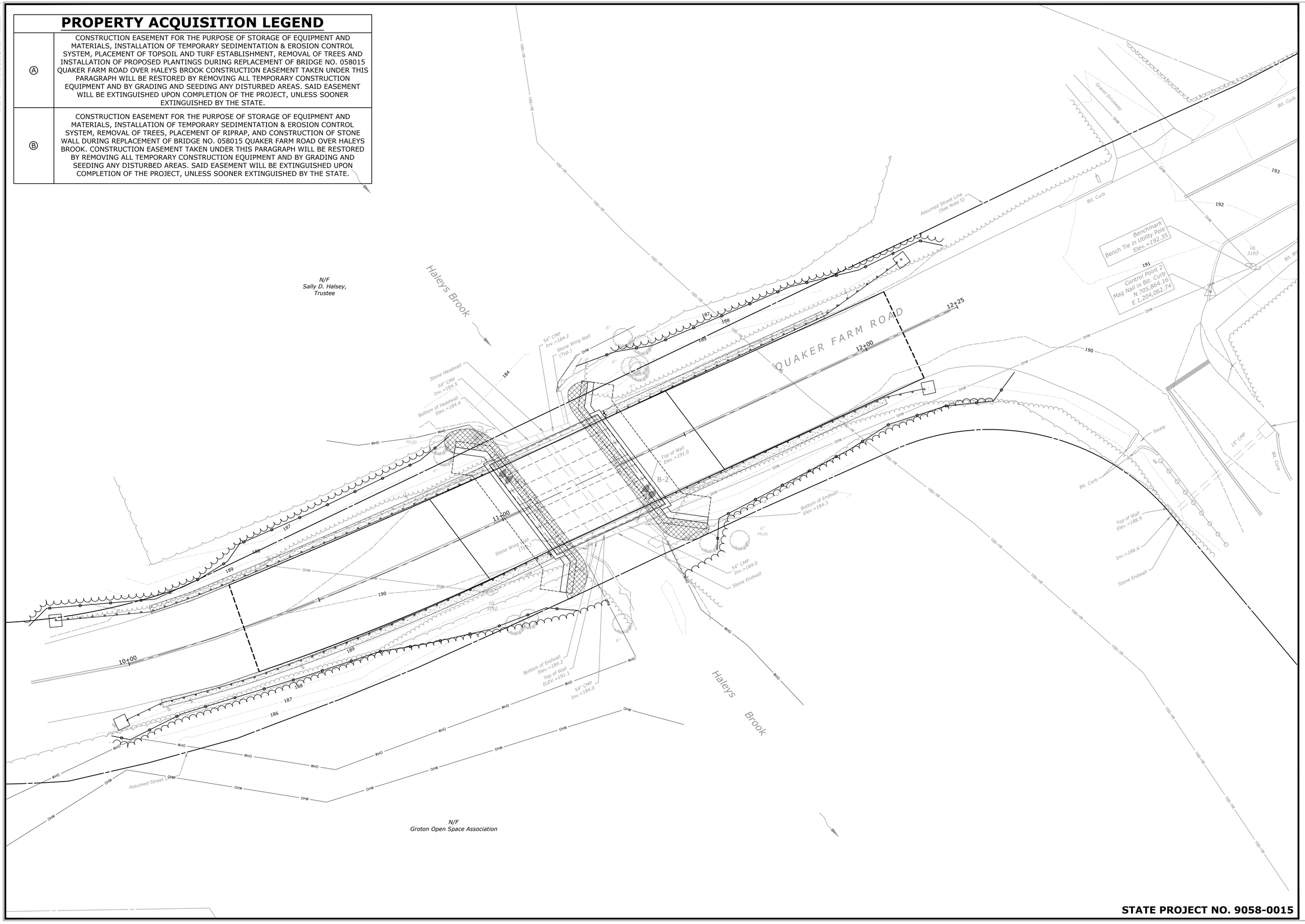

STATE PROJECT NO. 9058-0015

SLR
99 REALTY DRIVE
CHESHIRE, CT 06410
203.271.1773
SLRCONSULTING.COM

DESCRIPTION	DATE	BY

RIGHTS -OF-WAY PLAN

REPLACEMENT OF BRIDGE NO. 058015
QUAKERFARM ROAD OVER HALEYS BROOK

QUAKER FARM ROAD
GROTON, CONNECTICUT

SEP	WRS	SEP
DESIGNED	DRAWN	CHECKED

SCALE: 1"=5'

DATE: MAY 1, 2022

PROJECT NO.: 141.11461.00018

DRAWING NO.: ROW-01

SHEET NO.: 07

Copyright SLR International Corporation - 2021

SEDIMENT & EROSION CONTROL SPECIFICATIONS

GENERAL

THESE GUIDELINES SHALL APPLY TO ALL WORK CONSISTING OF ANY AND ALL TEMPORARY AND/OR PERMANENT MEASURES TO CONTROL WATER POLLUTION AND SOIL EROSION, AS MAY BE REQUIRED, DURING THE CONSTRUCTION OF THE PROJECT.

IN GENERAL, ALL CONSTRUCTION ACTIVITIES SHALL PROCEED IN SUCH A MANNER SO AS NOT TO POLLUTE ANY WETLANDS, WATERCOURSE, WATERBODY, AND CONDUIT CARRYING WATER, ETC. THE CONTRACTOR SHALL LIMIT, INSOFAR AS POSSIBLE, THE SURFACE AREA OF EARTH MATERIALS EXPOSED BY CONSTRUCTION METHODS AND IMMEDIATELY PROVIDE PERMANENT AND TEMPORARY POLLUTION CONTROL MEASURES TO PREVENT CONTAMINATION OF ADJACENT WETLANDS, WATERCOURSES, AND WATERBODIES, AND TO PREVENT, INSOFAR AS POSSIBLE, EROSION ON THE SITE.

LAND GRADING

GENERAL

1. THE RESHAPING OF THE GROUND SURFACE BY EXCAVATION AND FILLING OR A COMBINATION OF BOTH, TO OBTAIN PLANNED GRADES, SHALL PROCEED IN ACCORDANCE WITH THE FOLLOWING CRITERIA:
   a. THE CUT FACE OF EARTH EXCAVATION SHALL NOT BE STEEPER THAN TWO HORIZONTAL TO ONE VERTICAL (2:1).
   b. THE PERMANENT EXPOSED FACES OF FILLS SHALL NOT BE STEEPER THAN TWO HORIZONTAL TO ONE VERTICAL (2:1).
   c. THE CUT FACE OF ROCK EXCAVATION SHALL NOT BE STEEPER THAN ONE HORIZONTAL TO FOUR VERTICAL (1:4).
   d. PROVISION SHOULD BE MADE TO CONDUCT SURFACE WATER SAFELY TO STORM DRAINS TO PREVENT SURFACE RUNOFF FROM DAMAGING CUT FACES AND FILL SLOPES.
   e. EXCAVATIONS SHOULD NOT BE MADE SO CLOSE TO PROPERTY LINES AS TO ENDANGER ADJOINING PROPERTY WITHOUT PROTECTING SUCH PROPERTY FROM EROSION, SLIDING, SETTLING, OR CRACKING.
   f. NO FILL SHOULD BE PLACED WHERE IT WILL SLIDE OR WASH UPON THE PREMISES OF ANOTHER OWNER OR UPON ADJACENT WETLANDS, WATERCOURSES, OR WATERBODIES.

EROSION CHECKS

GENERAL

1. TEMPORARY PERVIOUS BARRIERS USING BALES OF HAY OR STRAW, HELD IN PLACE WITH STAKES DRIVEN THROUGH THE BALES AND INTO THE GROUND OR GEOTEXTILE FABRIC FASTENED TO A FENCE POST AND BURIED INTO THE GROUND, SHALL BE INSTALLED AND MAINTAINED AS REQUIRED TO CHECK EROSION AND REDUCE SEDIMENTATION.

CONSTRUCTION

1. BALES SHOULD BE PLACED IN A ROW WITH ENDS TIGHTLY ABUTTING THE ADJACENT BALES.
2. EACH BALE SHALL BE EMBEDDED INTO THE SOIL A MINIMUM OF FOUR INCHES (4").
3. BALES SHALL BE SECURELY ANCHORED IN PLACE BY WOOD STAKES OR REINFORCEMENT BARS DRIVEN THROUGH THE BALES AND INTO THE GROUND. THE FIRST STAKE IN EACH BALE SHALL BE ANGLED TOWARD THE PREVIOUSLY LAID BALE TO FORCE BALES TOGETHER.
4. GEOTEXTILE FABRIC SHALL BE SECURELY ANCHORED AT THE TOP OF A THREE FOOT (3') HIGH FENCE AND BURIED A MINIMUM OF FOUR INCHES (4") TO THE SOIL. SEAMS BETWEEN SECTIONS OF FILTER FABRIC SHALL OVERLAP A MINIMUM OF TWO FEET (2').

INSTALLATION AND MAINTENANCE

1. BALED HAY EROSION BARRIERS AND GEOTEXTILE FENCE SHALL BE INSTALLED AT THE LOCATION INDICATED ON THE PLAN AND IN ADDITIONAL AREAS AS MAY BE DEEMED APPROPRIATE DURING CONSTRUCTION.
2. ALL EROSION CHECKS SHALL BE MAINTAINED UNTIL ADJACENT AREAS ARE STABILIZED.
3. INSPECTION SHALL BE FREQUENT (AT MINIMUM MONTHLY AND BEFORE AND AFTER HEAVY RAIN) AND REPAIR OR REPLACEMENT SHALL BE MADE PROMPTLY AS NEEDED.
4. EROSION CHECKS SHALL BE REMOVED WHEN THEY HAVE SERVED THEIR USEFULNESS SO AS NOT TO BLOCK OR IMPEDE STORMWATER FLOW OR DRAINAGE.

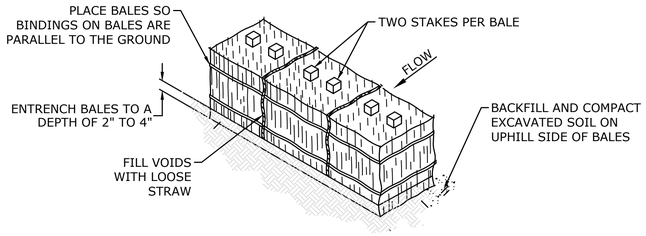

1. IDEALLY, BALES SHOULD BE ENTRENCHED 2 TO 4 INCHES AND TIGHTLY BUTTED TOGETHER. BALES CAN BE SUCCESSFULLY PLACED WITHOUT A TRENCH IF GOOD GROUND CONTACT IS MADE. REMOVE HEAVY BRUSH AND FILL ALL VOIDS WITH LOOSE STRAW.
2. BALES SHALL BE ONLY USED AS A TEMPORARY BARRIER AND FOR NO LONGER THAN 60 DAYS.
3. WHEN SEDIMENTATION DEPOSITS REACH WITHIN 3" OF THE TOP OF BALES, REMOVE SEDIMENTATION OR ADD ADDITIONAL BALES ON SEDIMENTATION DIRECTION BEHIND FIRST ROW OF BALES AS DIRECTED BY THE ENGINEER.
4. UPON ESTABLISHMENT OF GROUND COVER ON DISTURBED AREAS AND WHEN DIRECTED BY THE ENGINEER, HAY BALES WILL BE REMOVED AND USED AS MULCH. ANY SEDIMENTATION WILL BE THINLY SPREAD UPON ESTABLISHED GROUND COVER.

HAYBALE BARRIER PROTECTION

NOT TO SCALE

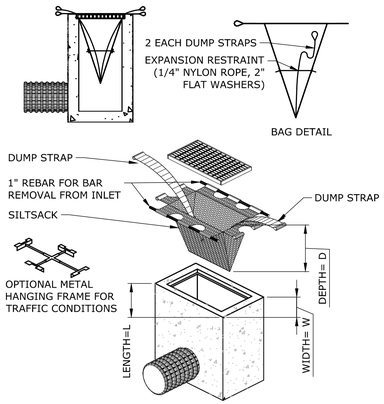

SEDIMENT CONTROL SYSTEM AT CATCH BASIN

NOT TO SCALE

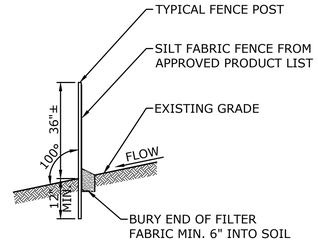

SEDIMENTATION CONTROL SYSTEM

NOT TO SCALE

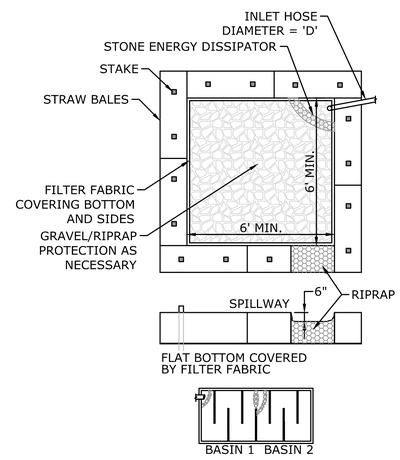

TEMPORARY DEWATERING BASIN

NOT TO SCALE

NOTE

1. IF PUMPING VOLUME EXCEEDS BASIN CAPACITY, BASIN MAY BE USED IN TANDEM OR TIERS.
2. INCREASE RIPRAP SIZE ON BASIN BOTTOM AS NECESSARY TO MAINTAIN SEDIMENT-FREE DISCHARGE WATERS.
3. TEMPORARY DEWATERING BASIN SHALL BE PAID FOR UNDER "HANDLING WATER".

STATE PROJECT NO. 9058-0015

Shelley E. Plude

P.E. CT# 0030683

SLR
99 REALTY DRIVE
CHESHIRE, CT 06410
203.271.1773
SLRCONSULTING.COM

DESCRIPTION	DATE	BY

SEDIMENT & EROSION CONTROL PLAN

REPLACEMENT OF BRIDGE NO. 058015
QUAKERFARM ROAD OVER HALEYS BROOK

QUAKER FARM ROAD
GROTON, CONNECTICUT

SEP	WRS	SEP
DESIGNED	DRAWN	CHECKED

SCALE: NOT TO SCALE

DATE: MAY 1, 2022

PROJECT NO.: 141.11461.00018

DRAWING NO.: SE-01

SHEET NO.: 08

Copyright SLR International Corporation - 2021

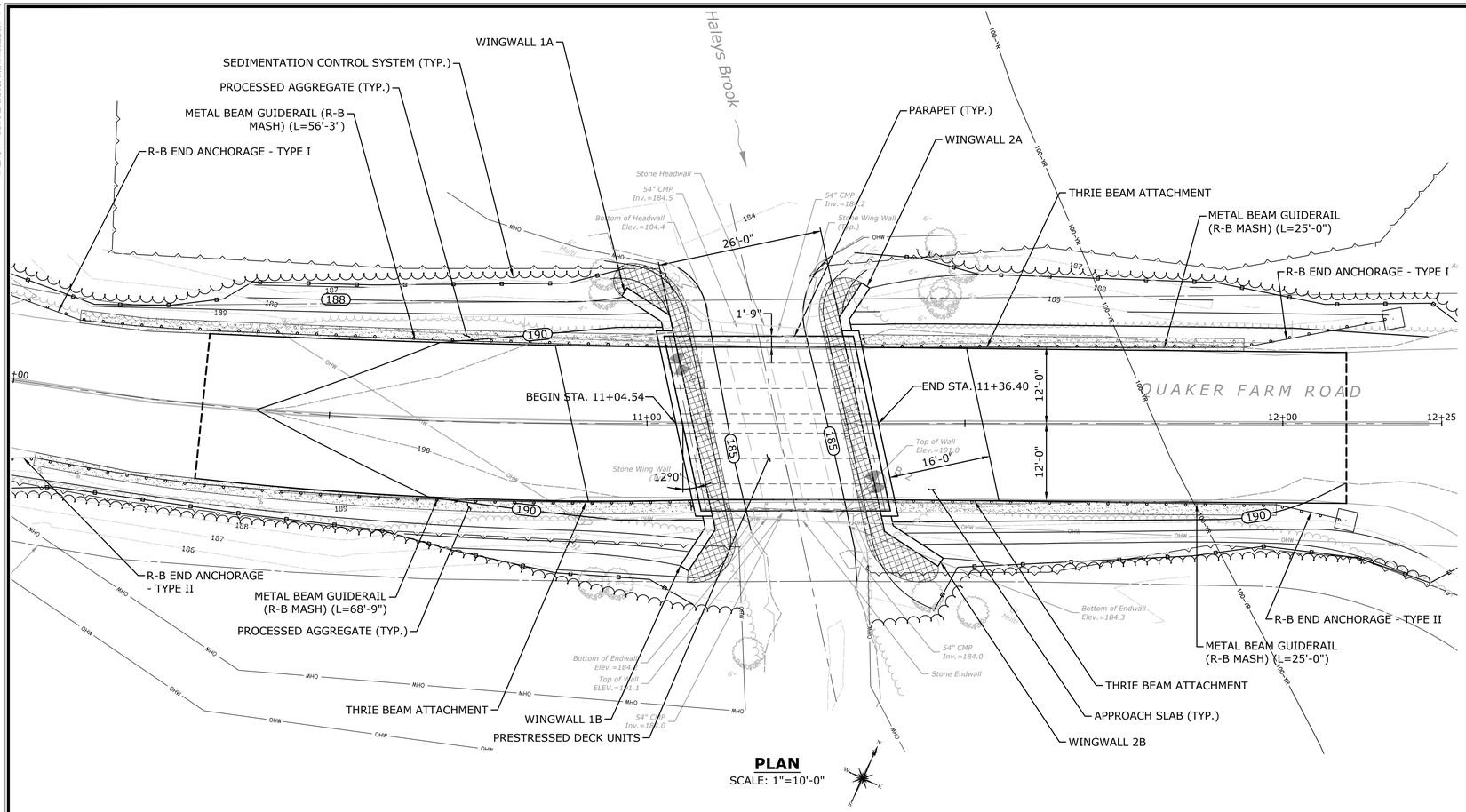

PLAN
SCALE: 1"=10'-0"

GENERAL NOTES

1. SPECIFICATIONS: CONNECTICUT DEPARTMENT OF TRANSPORTATION FORM 818 (2020), SUPPLEMENTAL SPECIFICATIONS DATED JANUARY 2022 AND SPECIAL PROVISIONS.

2. DESIGN SPECIFICATIONS: AASHTO LRFD DESIGN SPECIFICATIONS, 8TH EDITION, 2017, AS SUPPLEMENTED BY THE CONNECTICUT DEPARTMENT OF TRANSPORTATION BRIDGE DESIGN MANUAL (2003) WITH INTERIM REVISIONS UP TO AND INCLUDING 2019.

3. MATERIAL STRENGTHS:

   CONCRETE:
   CLASS PCC04460 — f'c = 4,000 PSI
   CLASS PCC04462 — f'c = 4,000 PSI
   PRESTRESSED CONCRETE PCC06561 — f'c = 6,500 PSI

   THE CONCRETE STRENGTH USED IN DESIGN (f'c) OF THE CONCRETE COMPONENTS IS NOTED ABOVE. THE COMPRESSIVE STRENGTH OF THE CONCRETE IN THE CONSTRUCTED COMPONENTS SHALL CONFORM TO THE REQUIREMENTS OF SECTION 6.01 - CONCRETE FOR STRUCTURES AND M.03 - PORTLAND CEMENT CONCRETE.

   REINFORCEMENT:
   ASTM A615 GRADE 60 — fy = 60,000 PSI

4. LIVE LOAD: HL-93, LEGAL AND PERMIT VEHICLES

5. FUTURE PAVING ALLOWANCE: NONE

6. BITUMINOUS CONCRETE OVERLAY: 2" HMA S0.5, 1" HMA S0.25

7. EXISTING DIMENSIONS: DIMENSIONS AND ELEVATIONS OF THE EXISTING STRUCTURE SHOWN ON THESE PLANS ARE FOR GENERAL REFERENCE ONLY AND ARE NOT GUARANTEED. THE CONTRACTOR SHALL TAKE ALL FIELD MEASUREMENTS NECESSARY TO ASSURE PROPER FIT OF THE FINISH WORK AND SHALL ASSUME FULL RESPONSIBILITY FOR THEIR ACCURACY. WHEN SHOP DRAWINGS BASED ON FIELD MEASUREMENTS ARE SUBMITTED FOR APPROVAL, THE FIELD MEASUREMENTS SHALL ALSO BE SUBMITTED FOR REFERENCE BY THE REVIEWER.

CONCRETE NOTES

1. REMAIN-IN-PLACE FORMS: THE USE OF REMAIN-IN-PLACE FORMS ON THIS STRUCTURE IS NOT ALLOWED.

2. THE FOLLOWING PAY ITEMS AND CONCRETE CLASSES ARE REQUIRED FOR CAST-IN-PLACE BRIDGE COMPONENTS:

ITEM	BRIDGE COMPONENTS	PCC CLASS
FOOTING CONCRETE	ABUTMENT AND WINGWALL FOOTINGS	PCC03340
ABUTMENT AND WALL CONCRETE	ABUTMENT AND WINGWALL STEMS	PCC04460
APPROACH SLAB CONCRETE	APPROACH SLABS	PCC04462
BRIDGE DECK CONCRETE	BRIDGE DECK	PCC04462
PARAPET CONCRETE	PARAPETS	PCC04462

3. EXPOSED EDGES: EXPOSED EDGES OF CONCRETE SHALL BE BEVELED 1"x1" UNLESS DIMENSIONED OTHERWISE.

4. CONCRETE COVER: ALL REINFORCEMENT SHALL HAVE TWO INCHES COVER UNLESS DIMENSIONED OTHERWISE.

5. REINFORCEMENT: ALL REINFORCEMENT SHALL BE GALVANIZED AFTER FABRICATION UNLESS NOTED OTHERWISE. ALL REINFORCEMENT SHALL CONFORM TO THE REQUIREMENTS OF ASTM A767, CLASS 1, INCLUDING SUPPLEMENTAL REQUIREMENTS. THE COST OF FURNISHING AND PLACING THIS REINFORCEMENT SHALL BE INCLUDED IN THE ITEM "DEFORMED STEEL BARS - GALVANIZED."

6. CONSTRUCTION JOINTS: CONSTRUCTION JOINTS, OTHER THAN THOSE SHOWN ON THE PLANS, WILL NOT BE PERMITTED WITHOUT THE PRIOR APPROVAL OF THE ENGINEER.

NOTICE TO BRIDGE INSPECTORS

The Department's Bridge Safety procedure require this bridge to be inspected for, but not limited to, all appropriate components indicated in the governing manuals for bridge inspection. Attention must be given to inspecting the following special components and details. (The listing for components for specific attention shall not be construed to reduce the importance of inspection of any other component of the structure.) The frequency of inspection of this structure shall be in accordance with the governing manuals for bridge inspection, unless otherwise directed by the Manager of Bridge Safety and Evaluation.

COMPONENT OR DETAIL	BRIDGE SHEET REFERENCE
NONE	

HYDRAULIC DATA

DRAINAGE AREA	2.75 SQ. MI.
DESIGN FREQUENCY	100-YR
DESIGN DISCHARGE	390 CFS
UPSTREAM DESIGN WATER SURFACE EL.	188.05 FT
DOWNSTREAM DESIGN WATER SURFACE EL.	187.03 FT
OVERTOPPING FREQUENCY	>500-YR
OVERTOPPING DISCHARGE	>590 CFS
WORST CASE SCOUR SUB-STRUCTURE	WEST ABUTMENT
MAXIMUM SCOUR ELEVATION	179.5
AVERAGE DAILY FLOW	5 CFS
AVERAGE SPRING FLOW	10 CFS

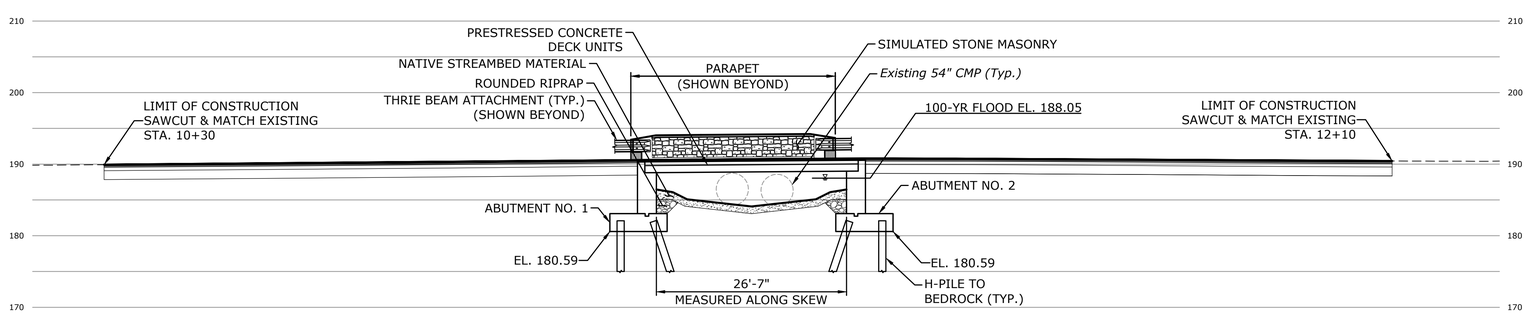

BASELINE ELEVATION
SCALE: 1"=10'-0"

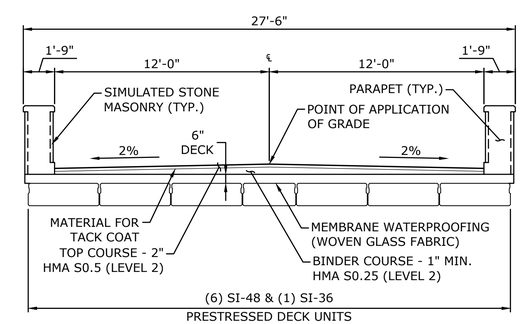

TYPICAL BRIDGE SECTION
SCALE: 1/4" = 1'-0"

STATE PROJECT NO. 9058-0015

Shelley E. Plude
P.E. CT# 0030683

SLR
99 REALTY DRIVE
CHESHIRE, CT 06410
203.271.1773
SLRCONSULTING.COM

DESCRIPTION	DATE	BY

ALT. 3 - PRESTRESSED CONCRETE DECK UNITS

REPLACEMENT OF BRIDGE NO. 058015
QUAKER FARM ROAD OVER HALEYS BROOK

QUAKER FARM ROAD
GROTON, CONNECTICUT

SEP	WRS	SEP
DESIGNED	DRAWN	CHECKED

SCALE: AS SHOWN
DATE: SEPTEMBER 09, 2021
PROJECT NO.: 11461.00018
DRAWING NO.: STR-01
SHEET NO.: 09

Copyright SLR International Corporation - 2021

BORING LOG

SLR International Corporation
99 Realty Drive, Cheshire, CT 06410
203.271.1773 | www.slrconsulting.com

PROJECT:	QUAKER FARM ROAD BRIDGE OVER HALEYS BROOK	**BORING NO.:** B-1	**SHEET:** 1 of 2
LOCATION:	QUAKER FARM ROAD, GROTON, CONNECTICUT	**CONTRACTOR:** GENERAL BORINGS, INC.	
PROJ. NO:	141.11461.00018	**FOREMAN:** J. WYANT	
CLIENT:	TOWN OF GROTON	**INSPECTOR:** R. HENDERSON	
DATE:	JUNE 10, 2021	**GROUND SURFACE ELEVATION:** ±190.0'	

EQUIPMENT:	AUGER	CASING	SAMPLER	COREBRL.	GROUNDWATER DEPTH (FT.)			TYPE OF RIG:
TYPE	HSA	-	SS	-	DATE	TIME	WATER DEPTH	TRUCK W/ AUTOMATIC HAMMER
SIZE ID (IN.)	3 1/4	-	1 3/8	-	2021-06-10	9:00 AM	±5.0'	RIG MODEL:
HMR. WT (LB.)	-	-	140	-				DIEDRICH D-50
HMR. FALL (IN.)	-	-	30	-				

Depth (FT)	SAMPLE NUMBER	RECOVERY (IN)	BLOWS PER 6"	SOIL AND ROCK CLASSIFICATION-DESCRIPTION BURMISTER SYSTEM (SOIL) U.S. CORPS OF ENGINEERS SYSTEM (ROCK)	DEPTH (FT.)	STRATUM DESCRIPTION	ELEV. (FT.)	Remark
				Top 6": ASPHALT. Bottom 6": Light brown, fine to coarse SAND, little fine to coarse Gravel, trace Silt.	0.5'	ASPHALT	189.5'	
1								
2	S-1	12	8	S-1: Medium dense, light brown, fine to coarse SAND, little fine to coarse Gravel, trace Silt.				
			11					
			6					
3			6	S-2: Medium dense, light brown, fine to coarse SAND, little Silt, trace fine to coarse Gravel.				
4	S-2	8	8			FILL		
			7					
			3		5.0'	G.W.T ▼	185.0'	
5			8	S-3: Medium dense, brown, fine to coarse SAND and fine to coarse GRAVEL, little Silt.				
6	S-3	3	8					
			3					
7			3					
8					8.5'		181.5'	
9								
10								
11	S-4	16	9	S-4: Medium dense, gray, fine to coarse SAND, some fine to coarse Gravel, some Silt.				
			7					
			9					
12			9					
13						GLACIAL TILL		
14								
15								
16	S-5	10	10	S-5: Dense, gray-brown, fine to coarse SAND, some fine to coarse Gravel, little Silt.				
			16					
			15					
17			19					
18					18.5'		171.5'	
19								
20								
21	S-6	8	13	S-6: Dense, brown, fine to coarse SAND and fine to coarse GRAVEL, some Silt.		WEATHERED BEDROCK		
			22					
			24					
22			23					

Remarks:

NON-PLASTIC (SPT-N)	PLASTIC (SPT-N)	SAMPLE TYPE	PROPORTIONS
0-4 = VERY LOOSE	0-2 = VERY SOFT	C = ROCK CORE	trace = <10%
4-10 = LOOSE	2-4 = SOFT	S = SPLIT SPOON	little = 10% - 20%
10-30 = MEDIUM DENSE	4-8 = MEDIUM	UP = UNDISTURBED PISTON	some = 20% - 35%
30-50 = DENSE	8-15 = STIFF	UT = UNDISTURBED THINWALL	and = 35% - 50%
50+ = VERY DENSE	15-30 = VERY STIFF		
	30 + = HARD		

BORING LOG

SLR International Corporation
99 Realty Drive, Cheshire, CT 06410
203.271.1773 | www.slrconsulting.com

PROJECT:	QUAKER FARM ROAD BRIDGE OVER HALEYS BROOK	**BORING NO.:** B-2	**SHEET:** 1 of 2
LOCATION:	QUAKER FARM ROAD, GROTON, CONNECTICUT	**CONTRACTOR:** GENERAL BORINGS, INC.	
PROJ. NO:	141.11461.00018	**FOREMAN:** J. WYANT	
CLIENT:	TOWN OF GROTON	**INSPECTOR:** R. HENDERSON	
DATE:	JUNE 10, 2021	**GROUND SURFACE ELEVATION:** ±190.0'	

EQUIPMENT:	AUGER	CASING	SAMPLER	COREBRL.	GROUNDWATER DEPTH (FT.)			TYPE OF RIG:
TYPE	HSA	-	SS	-	DATE	TIME	WATER DEPTH	TRUCK W/ AUTOMATIC HAMMER
SIZE ID (IN.)	3 1/4	-	1 3/8	-	2021-06-10	12:00 PM	±5.0'	RIG MODEL:
HMR. WT (LB.)	-	-	140	-				DIEDRICH D-50
HMR. FALL (IN.)	-	-	30	-				

Depth (FT)	SAMPLE NUMBER	RECOVERY (IN)	BLOWS PER 6"	SOIL AND ROCK CLASSIFICATION-DESCRIPTION BURMISTER SYSTEM (SOIL) U.S. CORPS OF ENGINEERS SYSTEM (ROCK)	DEPTH (FT.)	STRATUM DESCRIPTION	ELEV. (FT.)	Remark
				Top 6": ASPHALT. Bottom 6": Light brown, fine to coarse SAND, little fine to coarse Gravel, trace Silt.	0.5'	ASPHALT	189.5'	
1								
2	S-1	12	12	S-1: Medium dense, light brown, fine to coarse SAND, little fine to coarse Gravel, trace Silt.				
			13					
			9					
3			7	S-2: Dense, light brown, fine to coarse SAND, little fine to coarse Gravel, trace Silt.				
4	S-2	12	10			FILL		
			14					
			19					
5			15		5.0'	G.W.T ▼	185.0'	
6	S-3	10	18	S-3: Medium dense, brown, fine to coarse SAND, some fine to coarse Gravel, little Silt.				
			11					
			9					
7			8					
8					8.5'		181.5'	
9								
10								
11	S-4	18	12	S-4: Dense, brown, fine to coarse SAND, some fine to coarse Gravel, little Silt.				
			13					
			17					
12			13					
13								
14								
15								
16	S-5	12	6	S-5: Medium dense, brown, fine to coarse SAND and fine to coarse GRAVEL, trace Silt.		GLACIAL TILL		
			12					
			17					
17			17					
18								
19								
20								
21	S-6	10	17	S-6: Very dense, brown, fine to coarse SAND and fine to coarse GRAVEL, trace Silt.				
			33					
			49					
22			27					

Remarks:

NON-PLASTIC (SPT-N)	PLASTIC (SPT-N)	SAMPLE TYPE	PROPORTIONS
0-4 = VERY LOOSE	0-2 = VERY SOFT	C = ROCK CORE	trace = <10%
4-10 = LOOSE	2-4 = SOFT	S = SPLIT SPOON	little = 10% - 20%
10-30 = MEDIUM DENSE	4-8 = MEDIUM	UP = UNDISTURBED PISTON	some = 20% - 35%
30-50 = DENSE	8-15 = STIFF	UT = UNDISTURBED THINWALL	and = 35% - 50%
50+ = VERY DENSE	15-30 = VERY STIFF		
	30 + = HARD		

BORING LOG

SLR International Corporation
99 Realty Drive, Cheshire, CT 06410
203.271.1773 | www.slrconsulting.com

PROJECT:	QUAKER FARM ROAD BRIDGE OVER HALEYS BROOK	**BORING NO.:** B-1	**SHEET:** 2 of 2
LOCATION:	QUAKER FARM ROAD, GROTON, CONNECTICUT	**CONTRACTOR:** GENERAL BORINGS, INC.	
PROJ. NO:	141.11461.00018	**FOREMAN:** J. WYANT	
CLIENT:	TOWN OF GROTON	**INSPECTOR:** R. HENDERSON	
DATE:	JUNE 10, 2021	**GROUND SURFACE ELEVATION:** ±190.0'	

EQUIPMENT:	AUGER	CASING	SAMPLER	COREBRL.	GROUNDWATER DEPTH (FT.)			TYPE OF RIG:
TYPE	HSA	-	SS	-	DATE	TIME	WATER DEPTH	TRUCK W/ AUTOMATIC HAMMER
SIZE ID (IN.)	3 1/4	-	1 3/8	-	2021-06-10	9:00 AM	±5.0'	RIG MODEL:
HMR. WT (LB.)	-	-	140	-				DIEDRICH D-50
HMR. FALL (IN.)	-	-	30	-				

Depth (FT)	SAMPLE NUMBER	RECOVERY (IN)	BLOWS PER 6"	SOIL AND ROCK CLASSIFICATION-DESCRIPTION BURMISTER SYSTEM (SOIL) U.S. CORPS OF ENGINEERS SYSTEM (ROCK)	DEPTH (FT.)	STRATUM DESCRIPTION	ELEV. (FT.)	Remark
24								
25								
26	S-7	12	18	S-7: Dense, gray-brown, fine to coarse SAND, some Silt, trace fine Gravel.				
			23					
			23					
27			18			WEATHERED BEDROCK		
28								
29								
30								
31	S-8	9	18	S-8: Very dense, gray, fine to coarse SAND, some Silt, trace fine Gravel.				
			50/3"		30.8'		159.2	
32				Bottom of Exploration ±30.8'				
33								
34								
35								
36								
37								
38								
39								
40								
41								
42								
43								
44								
45								

Remarks:

NON-PLASTIC (SPT-N)	PLASTIC (SPT-N)	SAMPLE TYPE	PROPORTIONS
0-4 = VERY LOOSE	0-2 = VERY SOFT	C = ROCK CORE	trace = <10%
4-10 = LOOSE	2-4 = SOFT	S = SPLIT SPOON	little = 10% - 20%
10-30 = MEDIUM DENSE	4-8 = MEDIUM	UP = UNDISTURBED PISTON	some = 20% - 35%
30-50 = DENSE	8-15 = STIFF	UT = UNDISTURBED THINWALL	and = 35% - 50%
50+ = VERY DENSE	15-30 = VERY STIFF		
	30 + = HARD		

BORING LOG

SLR International Corporation
99 Realty Drive, Cheshire, CT 06410
203.271.1773 | www.slrconsulting.com

PROJECT:	QUAKER FARM ROAD BRIDGE OVER HALEYS BROOK	**BORING NO.:** B-2	**SHEET:** 2 of 2
LOCATION:	QUAKER FARM ROAD, GROTON, CONNECTICUT	**CONTRACTOR:** GENERAL BORINGS, INC.	
PROJ. NO:	141.11461.00018	**FOREMAN:** J. WYANT	
CLIENT:	TOWN OF GROTON	**INSPECTOR:** R. HENDERSON	
DATE:	JUNE 10, 2021	**GROUND SURFACE ELEVATION:** ±190.0'	

EQUIPMENT:	AUGER	CASING	SAMPLER	COREBRL.	GROUNDWATER DEPTH (FT.)			TYPE OF RIG:
TYPE	HSA	-	SS	-	DATE	TIME	WATER DEPTH	TRUCK W/ AUTOMATIC HAMMER
SIZE ID (IN.)	3 1/4	-	1 3/8	-	2021-06-10	12:00 PM	±5.0'	RIG MODEL:
HMR. WT (LB.)	-	-	140	-				DIEDRICH D-50
HMR. FALL (IN.)	-	-	30	-				

Depth (FT)	SAMPLE NUMBER	RECOVERY (IN)	BLOWS PER 6"	SOIL AND ROCK CLASSIFICATION-DESCRIPTION BURMISTER SYSTEM (SOIL) U.S. CORPS OF ENGINEERS SYSTEM (ROCK)	DEPTH (FT.)	STRATUM DESCRIPTION	ELEV. (FT.)	Remark
					23.5'	GLACIAL TILL	166.5'	
24								
25						WEATHERED BEDROCK		
26	S-7	2	50/2"	S-7: Dense, brown, fine to coarse GRAVEL, some fine to coarse Sand, trace Silt.	25.2'		164.8'	1
27				Bottom of Exploration ±25.2'				
28								
29								
30								
31								
32								
33								
34								
35								
36								
37								
38								
39								
40								
41								
42								
43								
44								
45								

Remarks: 1. Auger refusal at ±25.2 feet.

NON-PLASTIC (SPT-N)	PLASTIC (SPT-N)	SAMPLE TYPE	PROPORTIONS
0-4 = VERY LOOSE	0-2 = VERY SOFT	C = ROCK CORE	trace = <10%
4-10 = LOOSE	2-4 = SOFT	S = SPLIT SPOON	little = 10% - 20%
10-30 = MEDIUM DENSE	4-8 = MEDIUM	UP = UNDISTURBED PISTON	some = 20% - 35%
30-50 = DENSE	8-15 = STIFF	UT = UNDISTURBED THINWALL	and = 35% - 50%
50+ = VERY DENSE	15-30 = VERY STIFF		
	30 + = HARD		

STATE PROJECT NO. 9058-0015

Shelley E. Plude

P.E. CT# 0030683

SLR
99 REALTY DRIVE
CHESHIRE, CT 06410
203.271.1773
SLRCONSULTING.COM

DESCRIPTION	DATE	BY

BORING LOGS

REPLACEMENT OF BRIDGE NO. 058015
QUAKERFARM ROAD OVER HALEYS BROOK

QUAKER FARM ROAD
GROTON, CONNECTICUT

---	---	---
DESIGNED	DRAWN	CHECKED

SCALE: NOT TO SCALE

DATE: MAY 1, 2022

PROJECT NO.: 141.11461.00018

DRAWING NO.: STR-02

SHEET NO.: 10

Copyright SLR International Corporation - 2021

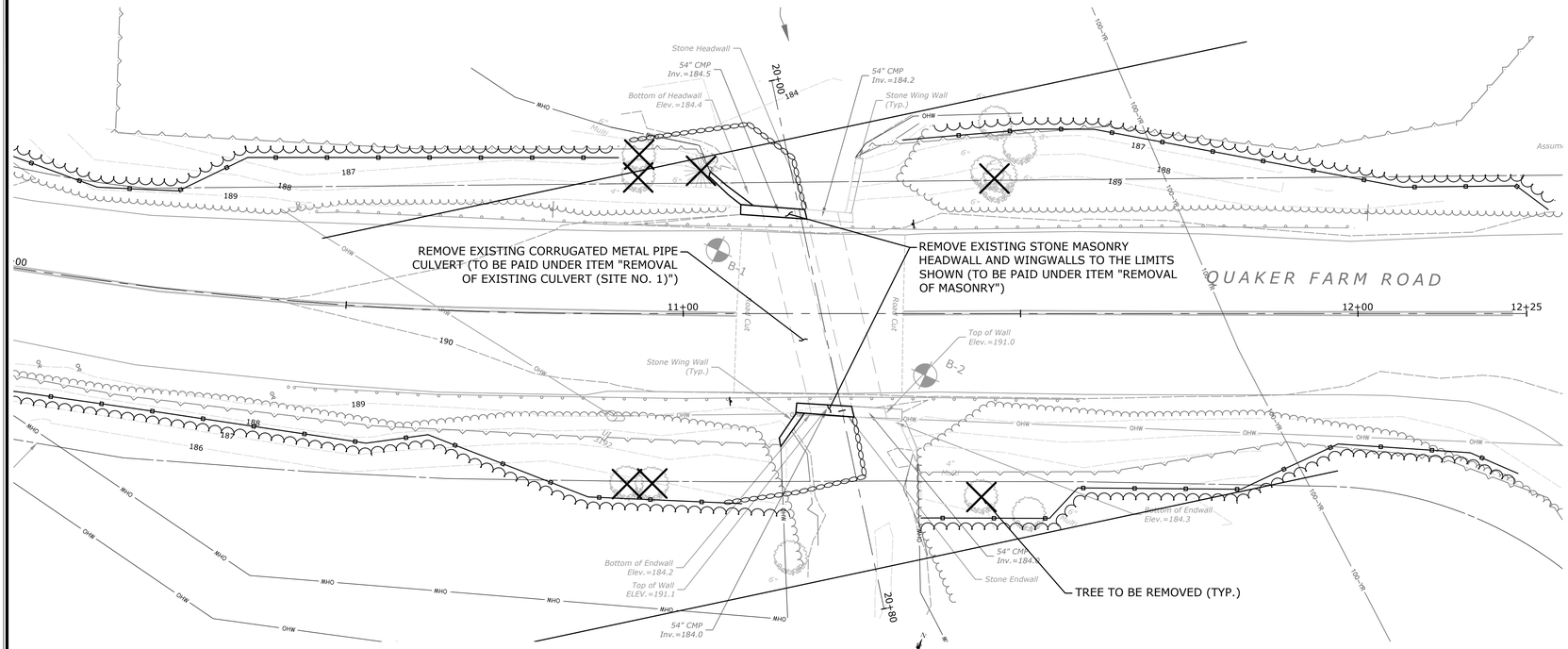

STAGE I
SCALE: 1" = 10'

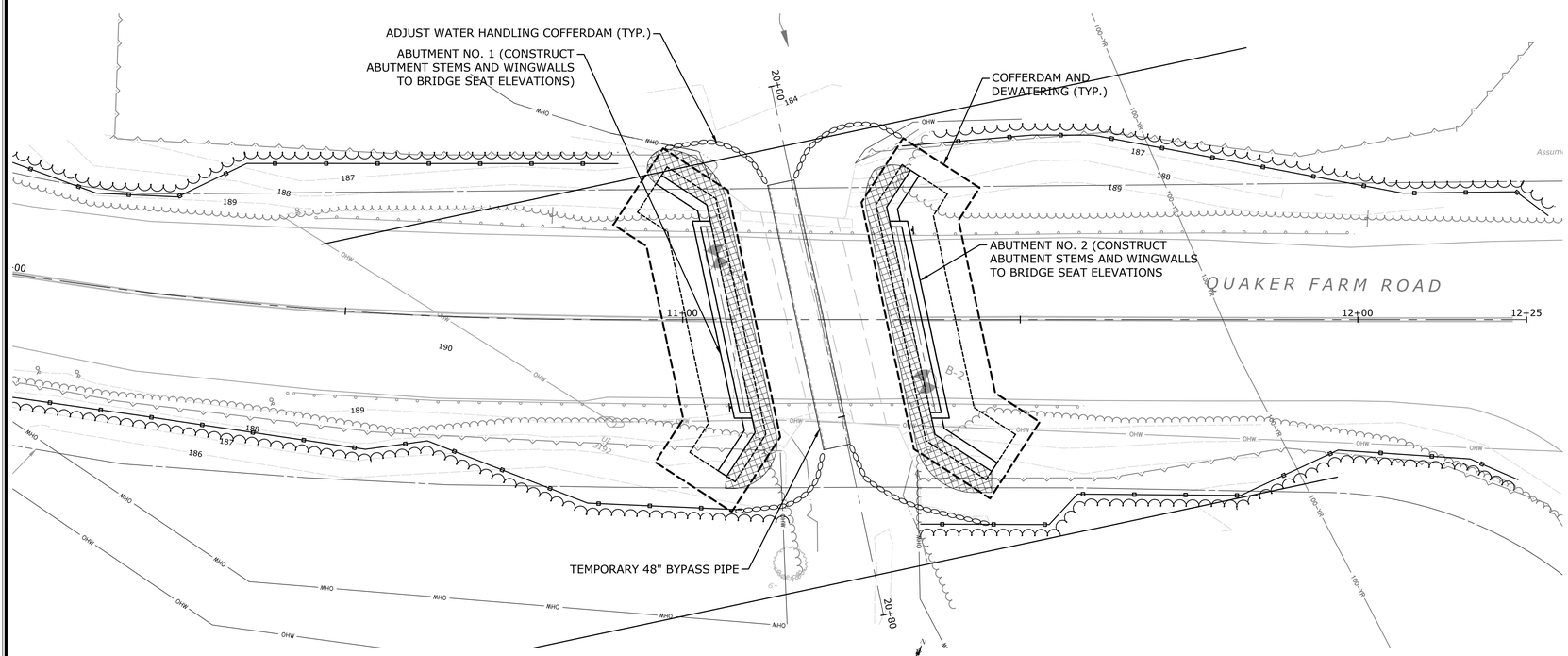

STAGE II
SCALE: 1" = 10'

SUGGESTED CONSTRUCTION SEQUENCE

UTILITY COORDINATION STAGE

PRIOR TO THE START OF CONSTRUCTION, THE CONTRACTOR SHALL COORDINATE WITH THE APPLICABLE UTILITIES TO RELOCATE THE EXISTING AERIAL UTILITIES WITHIN THE PROJECT LIMITS.

STAGE I

1. INSTALL SEDIMENTATION CONTROL SYSTEM.
2. PERFORM CLEARING AND GRUBBING AS SHOWN ON THE PLANS.
3. INSTALL WATER HANDLING COFFERDAM AS SHOWN.
4. REMOVE EXISTING STONE MASONRY HEADWALLS AND WINGWALLS TO THE LIMITS SHOWN.
5. REMOVE WESTERN CORRUGATED METAL PIPE CULVERT.

STAGE II

2. INSTALL 48" TEMPORARY BYPASS PIPE AND ADJUST WATER HANDLING COFFERDAM AS SHOWN.
3. REMOVE REMAINING CORRUGATED METAL PIPE CULVERT.
4. INSTALL COFFERDAM AND DEWATERING FOR ABUTMENT AND WINGWALL FOUNDATIONS.
5. INSTALL PILES FOR ABUTMENT NOS. 1 AND 2.
6. CONSTRUCT ABUTMENT STEMS AND WINGWALLS.
7. REMOVE COFFERDAM AND DEWATERING. BACKFILL ABUTMENTS AND WINGWALLS.
8. PLACE CHANNEL MATERIAL AND ESTABLISH FINISHED CHANNEL GRADE. ADJUST TEMPORARY 48" BYPASS PIPE AND WATER HANDLING COFFERDAM AS REQUIRED.
9. REMOVE TEMPORARY 48" BYPASS PIPE AND WATER HANDLING COFFERDAM.

STATE PROJECT NO. 9058-0015

SLR
99 REALTY DRIVE
CHESHIRE, CT 06410
203.271.1773
SLRCONSULTING.COM

DESCRIPTION	DATE	BY

STAGED CONSTRUCTION PLAN

REPLACEMENT OF BRIDGE NO. 058015
QUAKERFARM ROAD OVER HALEYS BROOK

QUAKER FARM ROAD
GROTON, CONNECTICUT

SEP	WRS	SEP
DESIGNED	DRAWN	CHECKED

SCALE: AS SHOWN
DATE: MAY 1, 2022
PROJECT NO.: 141.11461.00018
DRAWING NO.: MPT-01
SHEET NO.: 11

Copyright SLR International Corporation - 2021

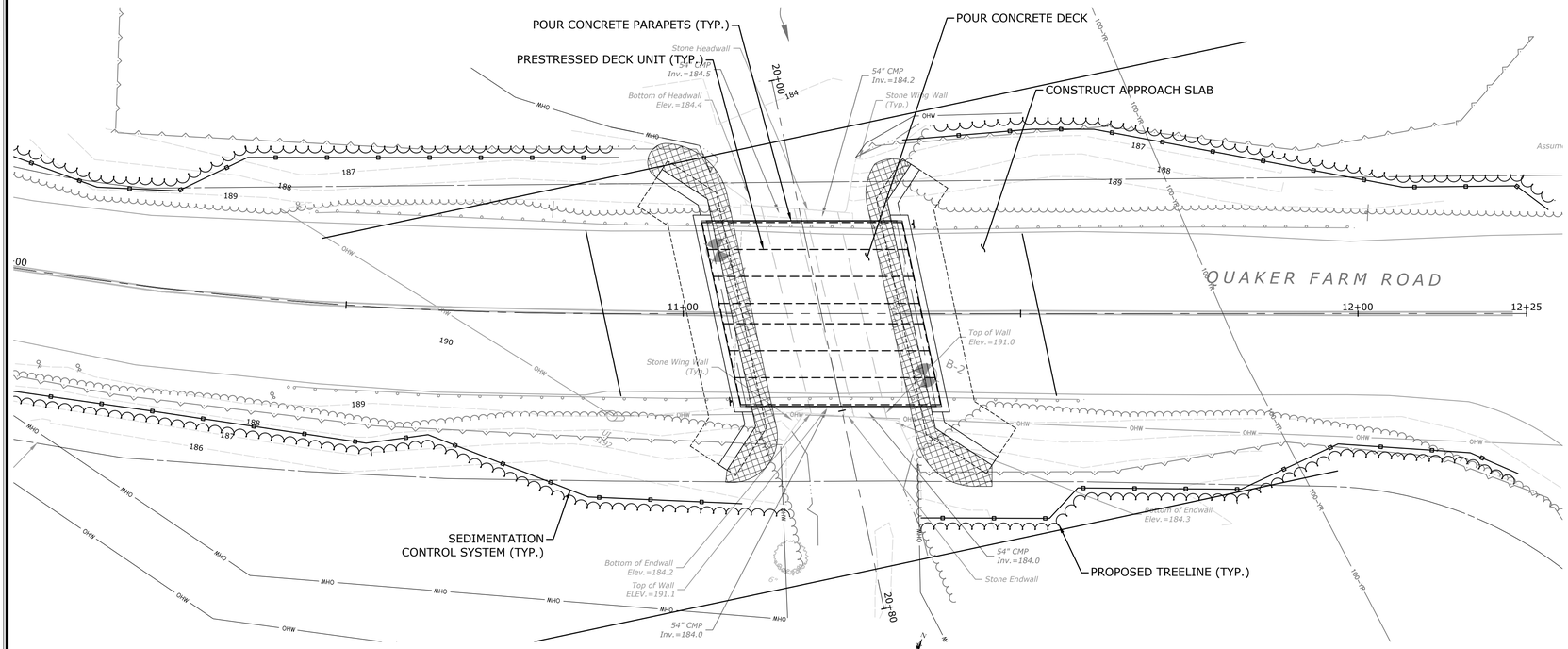

STAGE III
SCALE: 1" = 10'

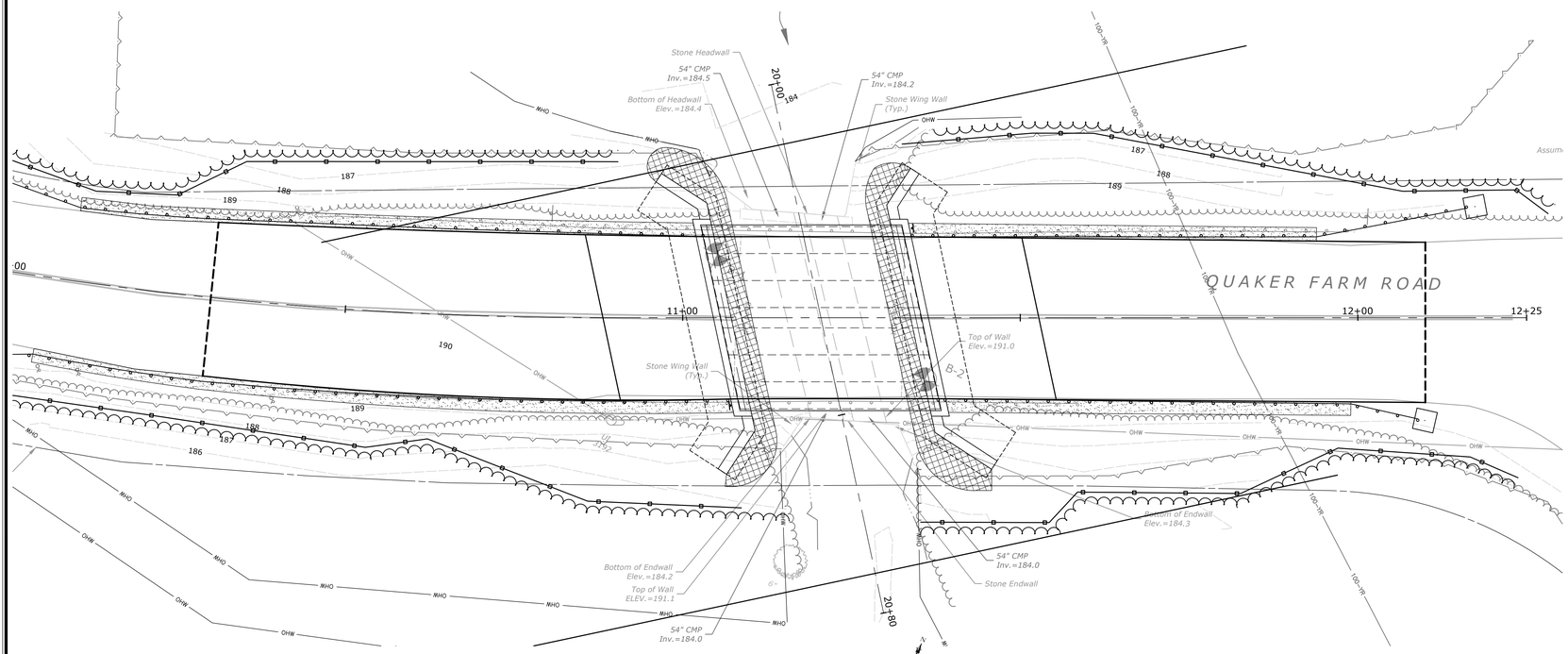

STAGE IV
SCALE: 1" = 10'

STAGE III

1. INSTALL PRESTRESSED DECK UNITS.
2. POUR CONCRETE DECK.
3. CONSTRUCT APPROACH SLABS.
4. POUR CONCRETE PARAPETS.
5. INSTALL MEMBRANE WATERPROOFING.

STAGE IV

1. COMPLETE ROADWAY RECONSTRUCTION AND PAVE.
2. INSTALL APPROACH GUIDERAIL AND BRIDGE RAIL.
3. FINALIZE GRADING.
4. INSTALL PLANTINGS AND PLACE TOPSOIL, TURF ESTABLISHMENT, AND NEW ENGLAND CONSERVATION/WILDLIFE MIX AS SHOWN ON THE PLANS.
5. REMOVE SEDIMENTATION AND EROSION CONTROL SYSTEMS.
6. REMOVE EXISTING ROAD CLOSURE SIGNAGE AND REOPEN QUAKER FARM ROAD TO TRAFFIC.

GENERAL NOTES

1. CONTRACTOR MAY PROPOSE ALTERNATE CONSTRUCTION SEQUENCE FOR APPROVAL BY ENGINEER.
2. THE CONTRACTOR'S ATTENTION IS DRAWN TO THE BORING LOGS AND THE PRESENCE OF GROUNDWATER. THE CONTRACTOR SHALL DEWATER TO CONSTRUCT THE WORK IN THE DRY. FOR THE INSTALLATION OF THE CONCRETE FOOTINGS, THE COST OF DEWATERING THE WORK AREA WILL BE PAID UNDER THE ITEM "COFFERDAM AND DEWATERING."
3. THE CONTRACTOR SHALL BE RESPONSIBLE TO DETERMINING APPROPRIATE MEANS AND METHODS, MATERIAL SELECTION, DESIGN, AND MAINTENANCE OF A COFFERDAM AND DEWATERING SYSTEM AS NEEDED FOR THE INSTALLATION OF THE INTEGRAL ABUTMENTS.

STATE PROJECT NO. 9058-0015

SLR
99 REALTY DRIVE
CHESHIRE, CT 06410
203.271.1773
SLRCONSULTING.COM

DESCRIPTION	DATE	BY

STAGED CONSTRUCTION PLAN

REPLACEMENT OF BRIDGE NO. 058015
QUAKERFARM ROAD OVER HALEYS BROOK

QUAKER FARM ROAD
GROTON, CONNECTICUT

SEP	WRS	SEP
DESIGNED	DRAWN	CHECKED

SCALE: AS SHOWN
DATE: MAY 1, 2022
PROJECT NO.: 141.11461.00018
DRAWING NO.: MPT-02
SHEET NO.: 12

Copyright SLR International Corporation - 2021

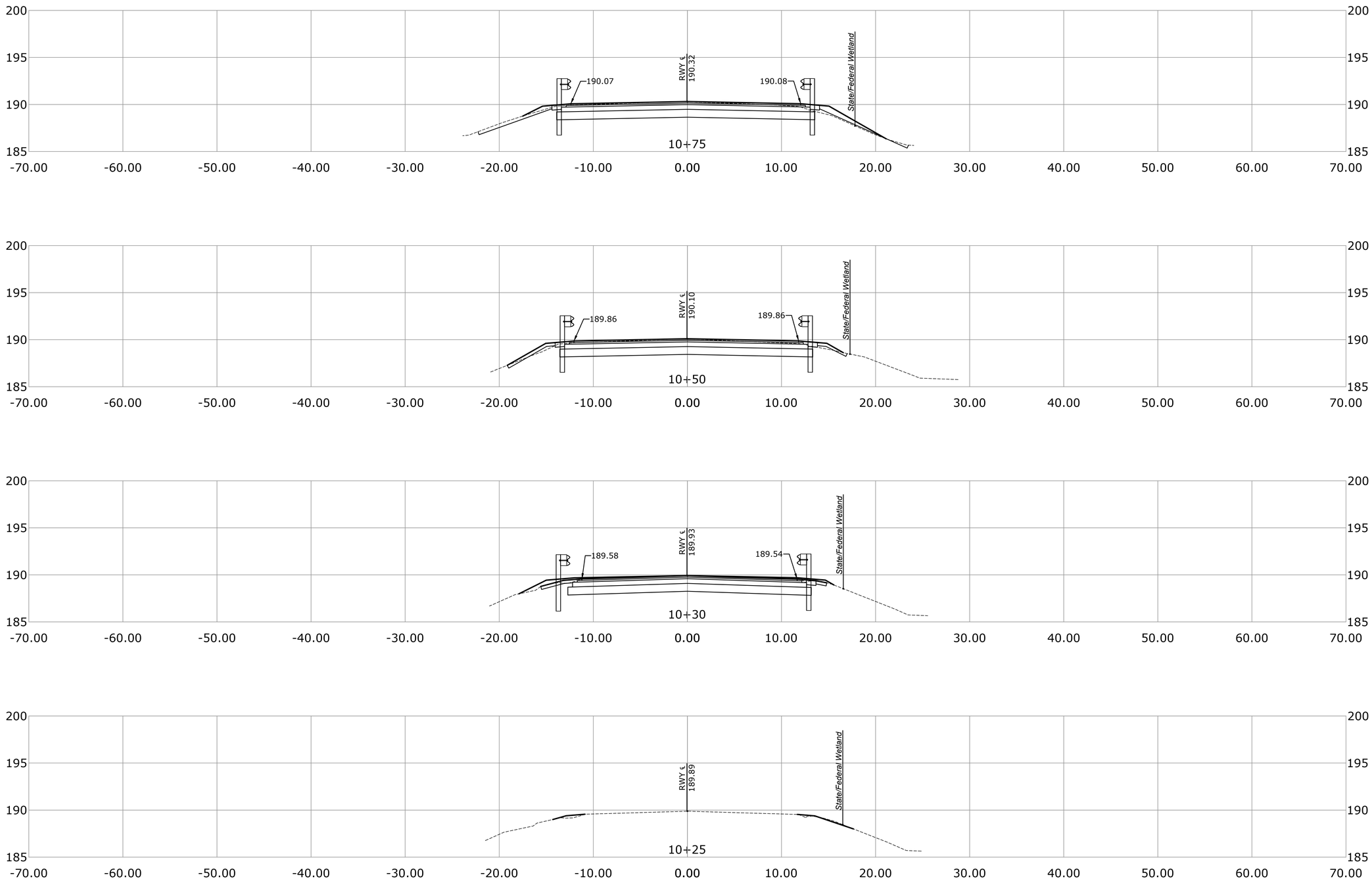

STATE PROJECT NO. 9058-0015

SLR

99 REALTY DRIVE
CHESHIRE, CT 06410
203.271.1773
SLRCONSULTING.COM

DESCRIPTION	DATE	BY

ROADWAY CROSS SECTIONS

REPLACEMENT OF BRIDGE NO. 058015
QUAKERFARM ROAD OVER HALEYS BROOK

QUAKER FARM ROAD
GROTON, CONNECTICUT

SEP	WRS	SEP
DESIGNED	DRAWN	CHECKED

SCALE: 1"=5'

DATE: MAY 1, 2022

PROJECT NO.: 141.11461.00018

DRAWING NO.: XSC-01

SHEET NO.: 13

Copyright SLR International Corporation - 2021

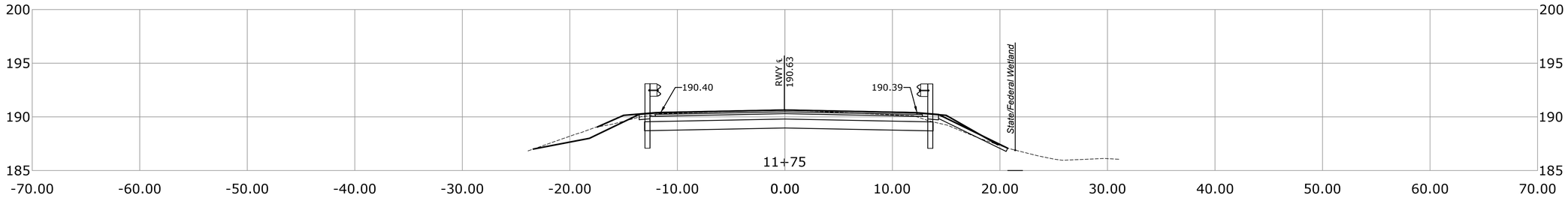

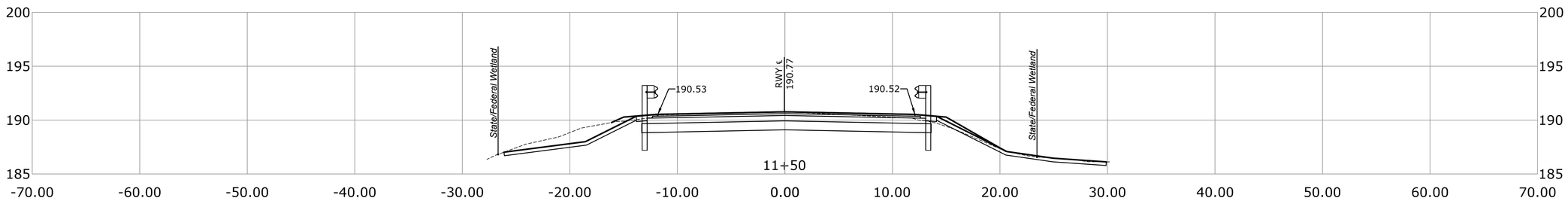

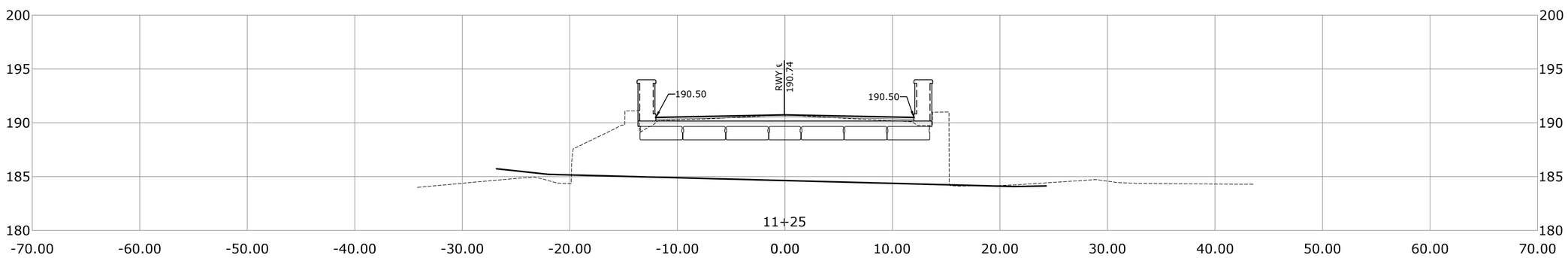

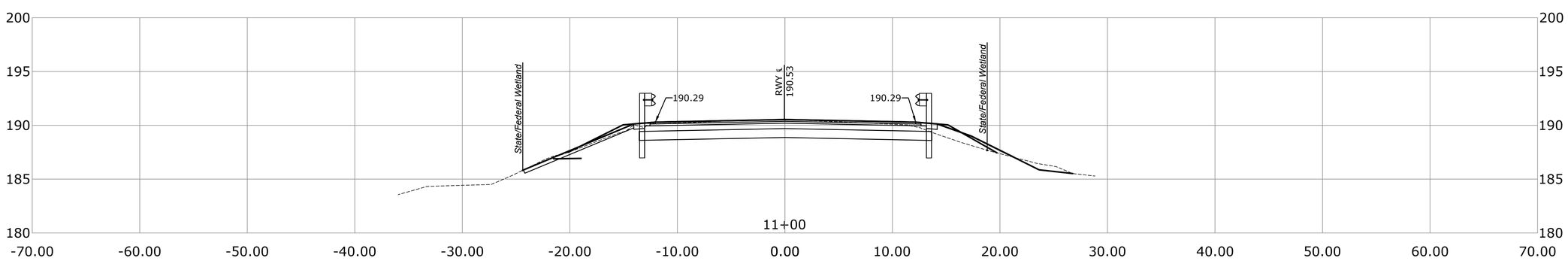

STATE PROJECT NO. 9058-0015

SLR
99 REALTY DRIVE
CHESHIRE, CT 06410
203.271.1773
SLRCONSULTING.COM

DESCRIPTION	DATE	BY

ROADWAY CROSS SECTIONS

REPLACEMENT OF BRIDGE NO. 058015
QUAKERFARM ROAD OVER HALEYS BROOK

QUAKER FARM ROAD
GROTON, CONNECTICUT

SEP	WRS	SEP
DESIGNED	DRAWN	CHECKED

SCALE: 1"=5'

DATE: MAY 1, 2022

PROJECT NO.: 141.11461.00018

DRAWING NO.: XSC-02

SHEET NO.: 14

Copyright SLR International Corporation - 2021

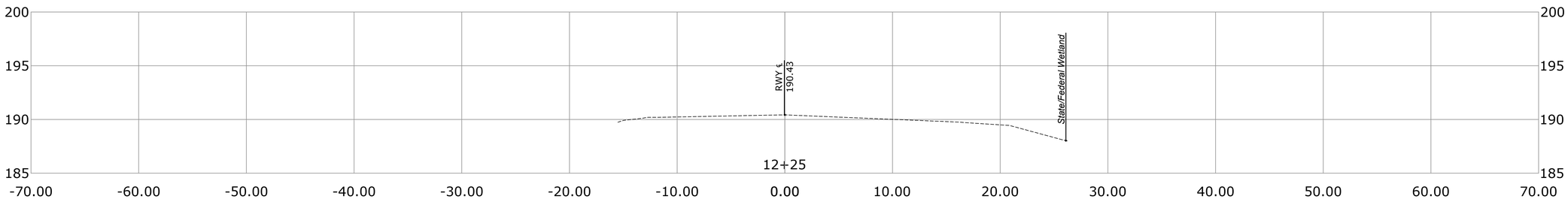

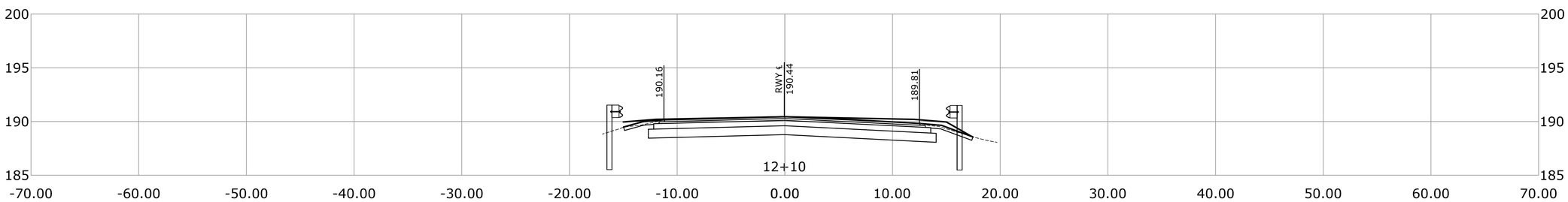

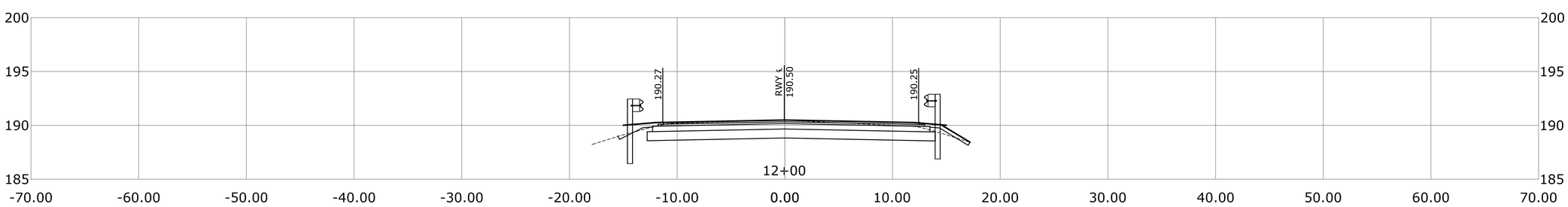

STATE PROJECT NO. 9058-0015

SLR

99 REALTY DRIVE
CHESHIRE, CT 06410
203.271.1773
SLRCONSULTING.COM

DESCRIPTION	DATE	BY

ROADWAY CROSS SECTIONS

REPLACEMENT OF BRIDGE NO. 058015
QUAKERFARM ROAD OVER HALEYS BROOK

QUAKER FARM ROAD
GROTON, CONNECTICUT

SEP	WRS	SEP
DESIGNED	DRAWN	CHECKED

SCALE: 1"=5'

DATE: MAY 1, 2022

PROJECT NO.: 141.11461.00018

DRAWING NO.: XSC-03

SHEET NO.: 15

Copyright SLR International Corporation - 2021

Making Sustainability Happen

Construction Contracts - Required Contract Provisions
(State Funded Only Contracts)

Index

1. Specific Equal Employment Opportunity Responsibilities

2. Contract Wage Rates

3. Americans with Disabilities Act of 1990, as Amended

4. Connecticut Statutory Labor Requirements

    a. Construction, Alteration or Repair of Public Works Projects; Wage Rates
    b. Debarment List - Limitation on Awarding Contracts
    c. Construction Safety and Health Course
    d. Awarding of Contracts to Occupational Safety and Health Law Violators Prohibited
    e. Residents Preference in Work on Other Public Facilities (Not Applicable to Federal Aid Contracts)

5. Tax Liability - Contractor's Exempt Purchase Certificate (CERT – 141)

6. Executive Orders (State of CT)

7. Non-Discrimination Requirement and Certification (pursuant to section 4a-60 and 4a-60a of the Connecticut General Statutes, as revised)

8. Whistleblower Provision

9. Connecticut Freedom of Information Act

    a. Disclosure of Records
    b. Confidential Information

10. Service of Process

11. Substitution of Securities for Retainages on State Contracts and Subcontracts

12. Health Insurance Portability and Accountability Act of 1996 (HIPAA)

13. Forum and Choice of Law

14. Summary of State Ethics Laws

15. Audit and Inspection of Plants, Places of Business and Records

16. Campaign Contribution Restriction

17. Tangible Personal Property

18. Bid Rigging and/or Fraud – Notice to Contractor

19. Consulting Agreements Representation

20. Sovereign Immunity

21. Large State Contract Representation for Contractor

22. Large State Contract Representation for Official or Employee of State Agency

23. Iran Investment Energy Certification

24. Access to Contract and State Data

25. Affirmative Action Policy Statement

26. Compliance with Consumer Data Privacy and Online Monitoring

Index of Exhibits

EXHIBIT A - Specific Equal Employment Opportunity Responsibilities (page 16)
EXHIBIT B - Affirmative Action Policy Statement (page 26)
EXHIBIT C - Health Insurance Portability and Accountability Act of 1996 (HIPAA) (page 30)
EXHIBIT D - State Wage Rates and Other Related Information (page 38)

1. Specific Equal Employment Opportunity Responsibilities

The Contractor shall comply with the Specific Equal Employment Opportunity requirements, as applicable, attached at Exhibit A and hereby made part of this Contract.

2. Contract Wage Rates

The Contractor shall comply with:

The State wage rate requirements indicated in Exhibit D hereof are hereby made part of this Contract.

Prevailing Wages for Work on State Highways; Annual Adjustments. With respect to contracts for work on state highways and bridges on state highways, the Contractor shall comply with the provisions of Section 31-54 and 31-55a of the Connecticut General Statutes, as revised.

As required by section 1.05.12 (Payrolls) of the State of Connecticut, Department of Transportation's Standard Specification for Roads, Bridges and Incidental Construction (FORM 818), as may be revised, every Contractor or subcontractor performing project work on a federal aid project is required to post the relevant prevailing wage rates as determined by the United States Secretary of Labor. The wage rate determinations shall be posted in prominent and easily accessible places at the work site.

3. Americans with Disabilities Act of 1990, as Amended

This provision applies to those Contractors who are or will be responsible for compliance with the terms of the Americans with Disabilities Act of 1990, as amended (42 U.S.C. 12101 et seq.), (Act), during the term of the Contract. The Contractor represents that it is familiar with the terms of this Act and that it is in compliance with the Act. Failure of the Contractor to satisfy this standard as the same applies to performance under this Contract, either now or during the term of the Contract as it may be amended, will render the Contract voidable at the option of the State upon notice to the contractor. The Contractor warrants that it will hold the State harmless and indemnify the State from any liability which may be imposed upon the State as a result of any failure of the Contractor to be in compliance with this Act, as the same applies to performance under this Contract.

4. Connecticut Statutory Labor Requirements

(a) Construction, Alteration or Repair of Public Works Projects; Wage Rates. The Contractor shall comply with Section 31-53 of the Connecticut General Statutes, as revised. The wages paid on an hourly basis to any person performing the work of any mechanic, laborer or worker on the work herein contracted to be done and the amount of payment or contribution paid or payable on behalf of each such person to

any employee welfare fund, as defined in subsection (i) of section 31-53 of the Connecticut General Statutes, shall be at a rate equal to the rate customary or prevailing for the same work in the same trade or occupation in the town in which such public works project is being constructed. Any contractor who is not obligated by agreement to make payment or contribution on behalf of such persons to any such employee welfare fund shall pay to each mechanic, laborer or worker as part of such person's wages the amount of payment or contribution for such person's classification on each pay day.

(b) Debarment List. Limitation on Awarding Contracts. The Contractor shall comply with Section 3l-53a of the Connecticut General Statutes, as revised.

(c) Construction Safety and Health Course. The Contractor shall comply with section 31-53b of the Connecticut General Statutes, as revised. The contractor shall furnish proof to the Labor Commissioner with the weekly certified payroll form for the first week each employee begins work on such project that any person performing the work of a mechanic, laborer or worker pursuant to the classifications of labor under section 31-53 of the Connecticut General Statutes, as revised, on such public works project, pursuant to such contract, has completed a course of at least ten hours in duration in construction safety and health approved by the federal Occupational Safety and Health Administration or, has completed a new miner training program approved by the Federal Mine Safety and Health Administration in accordance with 30 CFR 48 or, in the case of telecommunications employees, has completed at least ten hours of training in accordance with 29 CFR 1910.268.

Any employee required to complete a construction safety and health course as required that has not completed the course, shall have a maximum of fourteen (14) days to complete the course. If the employee has not been brought into compliance, they shall be removed from the project until such time as they have completed the required training.

Any costs associated with this notice shall be included in the general cost of the contract. In addition, there shall be no time granted to the contractor for compliance with this notice. The contractor's compliance with this notice and any associated regulations shall not be grounds for claims as outlined in Section 1.11 – "Claims".

(d) Awarding of Contracts to Occupational Safety and Health Law Violators Prohibited. The Contract is subject to Section 31-57b of the Connecticut General Statutes, as revised.

(e) Residents Preference in Work on Other Public Facilities. NOT APPLICABLE TO FEDERAL AID CONTRACTS. Pursuant to Section 31-52a of the Connecticut General Statutes, as revised, in the employment of mechanics, laborers or workmen to perform the work specified herein, preference shall be given to residents of the state who are, and continuously for at least six months prior to the date hereof have been, residents of this state, and if no such person is available, then to residents of other states.

5. Tax Liability - Contractor's Exempt Purchase Certificate (CERT – 141)

The Contractor shall comply with Chapter 219 of the Connecticut General Statutes pertaining to tangible personal property or services rendered that is/are subject to sales tax. The Contractor is responsible for determining its tax liability. If the Contractor purchases materials or supplies pursuant to the Connecticut Department of Revenue Services' "Contractor's Exempt Purchase Certificate (CERT-141)," as may be revised, the Contractor acknowledges and agrees that title to such materials and supplies installed or placed in the project will vest in the State simultaneously with passage of title from the retailers or vendors thereof, and the Contractor will have no property rights in the materials and supplies purchased.

Forms and instructions are available anytime by: Internet: Visit the DRS website at www.ct.gov/DRS to download and print Connecticut tax forms; or Telephone: Call 1-800-382- 9463 (Connecticut calls outside the Greater Hartford calling area only) and select Option 2 or call 860-297-4753 (from anywhere).

6. Executive Orders and Other Enactments

(a) All references in this Contract to any Federal, State, or local law, statute, public or special act, executive order, ordinance, regulation or code (collectively, "Enactments") shall mean Enactments that apply to the Contract at any time during its term, or that may be made applicable to the Contract during its term. This Contract shall always be read and interpreted in accordance with the latest applicable wording and requirements of the Enactments. Unless otherwise provided by Enactments, the Contractor is not relieved of its obligation to perform under this Contract if it chooses to contest the applicability of the Enactments or the Client Agency's authority to require compliance with the Enactments.

(b) This Contract is subject to the provisions of Executive Order No. Three of Governor Thomas J. Meskill, promulgated June 16, 1971, concerning labor employment practices, Executive Order No. Seventeen of Governor Thomas J. Meskill, promulgated February 15, 1973, concerning the listing of employment openings and Executive Order No. Sixteen of Governor John G. Rowland promulgated August 4, 1999, concerning violence in the workplace, all of which are incorporated into and are made a part of this Contract as if they had been fully set forth in it.

(c) This Contract may be subject to (1) Executive Order No. 14 of Governor M. Jodi Rell, promulgated April 17, 2006, concerning procurement of cleaning products and services; and (2) Executive Order No. 61 of Governor Dannel P. Malloy promulgated December 13, 2017, concerning the Policy for the Management of State Information Technology Projects, as issued by the Office of Policy and Management, Policy ID IT-SDLC-17-04. If any of the Executive Orders referenced in this subsection is applicable, it is deemed to be incorporated into and made a part of this Contract as if fully set forth in it.

7. Non-Discrimination

(a) For purposes of this Section, the following terms are defined as follows:

i. "Commission" means the Commission on Human Rights and Opportunities;

ii. "Contract" and “contract” include any extension or modification of the Contract or contract;

iii. "Contractor" and “contractor” include any successors or assigns of the Contractor or contractor;

iv. "Gender identity or expression" means a person's gender-related identity, appearance or behavior, whether or not that gender-related identity, appearance or behavior is different from that traditionally associated with the person's physiology or assigned sex at birth, which gender-related identity can be shown by providing evidence including, but not limited to, medical history, care or treatment of the gender-related identity, consistent and uniform assertion of the gender-related identity or any other evidence that the gender- related identity is sincerely held, part of a person's core identity or not being asserted for an improper purpose;

v. “good faith" means that degree of diligence which a reasonable person would exercise in the performance of legal duties and obligations;

vi. "good faith efforts" shall include, but not be limited to, those reasonable initial efforts necessary to comply with statutory or regulatory requirements and additional or substituted efforts when it is determined that such initial efforts will not be sufficient to comply with such requirements;

vii. "marital status" means being single, married as recognized by the state of Connecticut, widowed, separated or divorced;

viii. "mental disability" means one or more mental disorders, as defined in the most recent edition of the American Psychiatric Association's "Diagnostic and Statistical Manual of Mental Disorders", or a record of or regarding a person as having one or more such disorders;

ix. "minority business enterprise" means any small contractor or supplier of materials fifty- one percent or more of the capital stock, if any, or assets of which is owned by a person or persons: (1) who are active in the daily affairs of the enterprise, (2) who have the power to direct the management and policies of the enterprise, and (3) who are members of a minority, as such term is defined in subsection (a) of Connecticut General Statutes § 32- 9n; and

x. "public works contract" means any agreement between any individual, firm or corporation and the State or any political subdivision of the State other than a municipality for construction, rehabilitation, conversion, extension, demolition or repair of a public building, highway or other changes or improvements in real property, or which is financed in whole or in part by the State, including, but not limited to, matching expenditures, grants, loans, insurance or guarantees.

For purposes of this Section, the terms “Contract” and “contract” do not include a contract where each contractor is (1) a political subdivision of the state, including, but not limited to, a municipality, unless the contract is a municipal public works contract or quasi-public agency project contract, (2) any other state, including but not limited to any federally

recognized Indian tribal governments, as defined in C.G.S. § 1-267, (3) the federal government, (4) a foreign government, or (5) an agency of a subdivision, state or government described in the immediately preceding enumerated items (1), (2), (3),or (4).

(b) (1) The Contractor agrees and warrants that in the performance of the Contract such Contractor will not discriminate or permit discrimination against any person or group of persons on the grounds of race, color, religious creed, age, marital status, national origin, ancestry, sex, gender identity or expression, status as a veteran, status as a victim of domestic violence, intellectual disability, mental disability or physical disability, including, but not limited to, blindness, unless it is shown by such Contractor that such disability prevents performance of the work involved, in any manner prohibited by the laws of the United States or of the State of Connecticut; and the Contractor further agrees to take affirmative action to ensure that applicants with job-related qualifications are employed and that employees are treated when employed without regard to their race, color, religious creed, age, marital status, national origin, ancestry, sex, gender identity or expression, status as a veteran, status as a victim of domestic violence, intellectual disability, mental disability or physical disability, including, but not limited to, blindness, unless it is shown by the Contractor that such disability prevents performance of the work involved;
(2) the Contractor agrees, in all solicitations or advertisements for employees placed by or on behalf of the Contractor, to state that it is an "affirmative action-equal opportunity employer" in accordance with regulations adopted by the Commission; (3) the Contractor agrees to provide each labor union or representative of workers with which the Contractor has a collective bargaining Agreement or other contract or understanding and each vendor with which the Contractor has a contract or understanding, a notice to be provided by the Commission, advising the labor union or workers' representative of the Contractor's commitments under this section and to post copies of the notice in conspicuous places available to employees and applicants for employment; (4) the Contractor agrees to comply with each provision of this Section and Connecticut General Statutes §§ 46a-68e and 46a-68f and with each regulation or relevant order issued by said Commission pursuant to Connecticut General Statutes
§§ 46a-56, 46a-68e and 46a-68f; and (5) the Contractor agrees to provide the Commission on Human Rights and Opportunities with such information requested by the Commission, and permit access to pertinent books, records and accounts, concerning the employment practices and procedures of the Contractor as relate to the provisions of this Section and Connecticut General Statutes § 46a-56. If the contract is a public works contract, the Contractor agrees and warrants that he will make good faith efforts to employ minority business enterprises as subcontractors and suppliers of materials on such public works projects.

(c) Determination of the Contractor's good faith efforts shall include, but shall not be limited to, the following factors: The Contractor's employment and subcontracting policies, patterns and practices; affirmative advertising, recruitment and training; technical assistance activities and such other reasonable activities or efforts as the Commission may prescribe that are designed to ensure the participation of minority business enterprises in public works projects.

(d) The Contractor shall develop and maintain adequate documentation, in a manner

prescribed by the Commission, of its good faith efforts.

(e) The Contractor shall include the provisions of subsection (b) of this Section in every subcontract or purchase order entered into in order to fulfill any obligation of a contract with the State and such provisions shall be binding on a subcontractor, vendor or manufacturer unless exempted by regulations or orders of the Commission. The Contractor shall take such action with respect to any such subcontract or purchase order as the Commission may direct as a means of enforcing such provisions including sanctions for noncompliance in accordance with Connecticut General Statutes §46a-56; provided if such Contractor becomes involved in, or is threatened with, litigation with a subcontractor or vendor as a result of such direction by the Commission, the Contractor may request the State of Connecticut to enter into any such litigation or negotiation prior thereto to protect the interests of the State and the State may so enter.

(f) The Contractor agrees to comply with the regulations referred to in this Section as they exist on the date of this Contract and as they may be adopted or amended from time to time during the term of this Contract and any amendments thereto.

(g) (1) The Contractor agrees and warrants that in the performance of the Contract such Contractor will not discriminate or permit discrimination against any person or group of persons on the grounds of sexual orientation, in any manner prohibited by the laws of the United States or the State of Connecticut, and that employees are treated when employed without regard to their sexual orientation; (2) the Contractor agrees to provide each labor union or representative of workers with which such Contractor has a collective bargaining Agreement or other contract or understanding and each vendor with which such Contractor has a contract or understanding, a notice to be provided by the Commission on Human Rights and Opportunities advising the labor union or workers' representative of the Contractor's commitments under this section, and to post copies of the notice in conspicuous places available to employees and applicants for employment;
(3) the Contractor agrees to comply with each provision of this section and with each regulation or relevant order issued by said Commission pursuant to Connecticut General Statutes § 46a-56; and (4) the Contractor agrees to provide the Commission on Human Rights and Opportunities with such information requested by the Commission, and permit access to pertinent books, records and accounts, concerning the employment practices and procedures of the Contractor which relate to the provisions of this Section and Connecticut General Statutes § 46a-56.

(h) The Contractor shall include the provisions of the foregoing paragraph in every subcontract or purchase order entered into in order to fulfill any obligation of a contract with the State and such provisions shall be binding on a subcontractor, vendor or manufacturer unless exempted by regulations or orders of the Commission. The Contractor shall take such action with respect to any such subcontract or purchase order as the Commission may direct as a means of enforcing such provisions including sanctions for noncompliance in accordance with Connecticut General Statutes § 46a-56; provided, if such Contractor becomes involved in, or is threatened with, litigation with a subcontractor or vendor as a result of such direction by the Commission, the

Contractor may request the State of Connecticut to enter into any such litigation or negotiation prior thereto to protect the interests of the State and the State may so enter.

(i) Pursuant to subsection (c) of section 4a-60 and subsection (b) of section 4a-60a of the Connecticut General Statutes, the Contractor, for itself and its authorized signatory of this Contract, affirms that it understands the obligations of this section and that it will maintain a policy for the duration of the Contract to assure that the Contract will be performed in compliance with the nondiscrimination requirements of such sections. The Contractor and its authorized signatory of this Contract demonstrate their understanding of this obligation by (A) having provided an affirmative response in the required online bid or response to a proposal question which asks if the contractor understands its obligations under such sections, (B) signing this Contract, or (C) initialing this nondiscrimination affirmation in the following box: ☐

8. Whistleblower Provision

The following clause is applicable if the Contract has a value of Five Million Dollars ($5,000,000) or more.

Whistleblowing. This Contract may be subject to the provisions of Section 4-61dd of the Connecticut General Statutes. In accordance with this statute, if an officer, employee or appointing authority of the Contractor takes or threatens to take any personnel action against any employee of the Contractor in retaliation for such employee's disclosure of information to any employee of the contracting state or quasi-public agency or the Auditors of Public Accounts or the Attorney General under the provisions of subsection (a) of such statute, the Contractor shall be liable for a civil penalty of not more than five thousand dollars for each offense, up to a maximum of twenty per cent of the value of this Contract.
Each violation shall be a separate and distinct offense and in the case of a continuing violation, each calendar day's continuance of the violation shall be deemed to be a separate and distinct offense. The State may request that the Attorney General bring a civil action in the Superior Court for the Judicial District of Hartford to seek imposition and recovery of such civil penalty. In accordance with subsection (f) of such statute, each large state contractor, as defined in the statute, shall post a notice of the provisions of the statute relating to large state contractors in a conspicuous place which is readily available for viewing by the employees of the Contractor.

9. Connecticut Freedom of Information Act

(a) Disclosure of Records. This Contract may be subject to the provisions of section 1-218 of the Connecticut General Statutes. In accordance with this statute, each contract in excess of two million five hundred thousand dollars between a public agency and a person for the performance of a governmental function shall (a) provide that the public agency is entitled to receive a copy of records and files related to the performance of the governmental function, and (b) indicate that such records and files are subject to FOIA and may be disclosed by the public agency pursuant to FOIA. No request to inspect or copy such records or files shall be valid unless the request is made to the public agency in accordance with FOIA. Any complaint by a person who is denied the right to inspect or copy such records or files shall be brought to the Freedom of Information Commission in accordance with the provisions of sections 1-205 and 1-206 of the Connecticut General

Statutes.

(b) Confidential Information. The State will afford due regard to the Contractor's request for the protection of proprietary or confidential information which the State receives from the Contractor. However, all materials associated with the Contract are subject to the terms of the FOIA and all corresponding rules, regulations and interpretations. In making such a request, the Contractor may not merely state generally that the materials are proprietary or confidential in nature and not, therefore, subject to release to third parties. Those particular sentences, paragraphs, pages or sections that the Contractor believes are exempt from disclosure under the FOIA must be specifically identified as such. Convincing explanation and rationale sufficient to justify each exemption consistent with the FOIA must accompany the request. The rationale and explanation must be stated in terms of the prospective harm to the competitive position of the Contractor that would result if the identified material were to be released and the reasons why the materials are legally exempt from release pursuant to the FOIA. To the extent that any other provision or part of the Contract conflicts or is in any way inconsistent with this section, this section controls and shall apply, and the conflicting provision or part shall not be given effect. If the Contractor indicates that certain documentation is submitted in confidence, by specifically and clearly marking the documentation as "CONFIDENTIAL," DOT will first review the Contractor's claim for consistency with the FOIA (that is, review that the documentation is actually a trade secret or commercial or financial information and not required by statute), and if determined to be consistent, will endeavor to keep such information confidential to the extent permitted by law. See, *e.g.*, Conn. Gen. Stat. §1-210(b)(5) (A-B). The State, however, has no obligation to initiate, prosecute or defend any legal proceeding or to seek a protective order or other similar relief to prevent disclosure of any information that is sought pursuant to a FOIA request. Should the State withhold such documentation from a Freedom of Information requester and a complaint be brought to the Freedom of Information Commission, the Contractor shall have the burden of cooperating with DOT in defense of that action and in terms of establishing the availability of any FOIA exemption in any proceeding where it is an issue. In no event shall the State have any liability for the disclosure of any documents or information in its possession which the State believes are required to be disclosed pursuant to the FOIA or other law.

10. Service of Process

The Contractor, if not a resident of the State of Connecticut, or, in the case of a partnership, the partners, if not residents, hereby appoints the Secretary of State of the State of Connecticut, and his successors in office, as agent for service of process for any action arising out of or as a result of this Contract; such appointment to be in effect throughout the life of this Contract and six (6) years thereafter.

11. Substitution of Securities for Retainages on State Contracts and Subcontracts

This Contract is subject to the provisions of Section 3-ll2a of the General Statutes of the State

of Connecticut, as revised.

12. Health Insurance Portability and Accountability Act of 1996 (HIPAA)

The Contractor shall comply, if applicable, with the Health Insurance Portability and Accountability Act of 1996 and, pursuant thereto, the provisions attached at Exhibit B, and hereby made part of this Contract.

13. Forum and Choice of Law

Forum and Choice of Law. The parties deem the Contract to have been made in the City of Hartford, State of Connecticut. Both parties agree that it is fair and reasonable for the validity and construction of the Contract to be, and it shall be, governed by the laws and court decisions of the State of Connecticut, without giving effect to its principles of conflicts of laws. To the extent that any immunities provided by Federal law or the laws of the State of Connecticut do not bar an action against the State, and to the extent that these courts are courts of competent jurisdiction, for the purpose of venue, the complaint shall be made returnable to the Judicial District of Hartford only or shall be brought in the United States District Court for the District of Connecticut only, and shall not be transferred to any other court, provided, however, that nothing here constitutes a waiver or compromise of the sovereign immunity of the State of Connecticut. The Contractor waives any objection which it may now have or will have to the laying of venue of any Claims in any forum and further irrevocably submits to such jurisdiction in any suit, action or proceeding.

14. Summary of State Ethics Laws

Pursuant to the requirements of section 1-101qq of the Connecticut General Statutes (a) the State has provided to the Contractor the summary of State ethics laws developed by the State Ethics Commission pursuant to section 1-81b of the Connecticut General Statutes, which summary is incorporated by reference into and made a part of this Contract as if the summary had been fully set forth in this Contract; (b) the Contractor represents that the chief executive officer or authorized signatory of the Contract and all key employees of such officer or signatory have read and understood the summary and agree to comply with the provisions of state ethics law; (c) prior to entering into a contract with any subcontractors or consultants, the Contractor shall provide the summary to all subcontractors and consultants and each such contract entered into with a subcontractor or consultant on or after July 1, 2021, shall include a representation that each subcontractor or consultant and the key employees of such subcontractor or consultant have read and understood the summary and agree to comply with the provisions of state ethics law; (d) failure to include such representations in such contracts with subcontractors or consultants shall be cause for termination of the Contract; and (e) each contract with such contractor, subcontractor or consultant shall incorporate such summary by reference as a part of the contract terms.

15. Audit and Inspection of Plants, Places of Business and Records

(a) The State and its agents, including, but not limited to, the Connecticut Auditors of Public Accounts, Attorney General and State's Attorney and their respective agents, may, at reasonable hours, inspect and examine all of the parts of the Contractor's and

Contractor Parties' plants and places of business which, in any way, are related to, or involved in, the performance of this Contract. For the purposes of this Section, "Contractor Parties" means the Contractor's members, directors, officers, shareholders, partners, managers, principal officers, representatives, agents, servants, consultants, employees or any one of them or any other person or entity with whom the Contractor is in privity of oral or written contract and the Contractor intends for such other person or entity to Perform under the Contract in any capacity.

(b) The Contractor shall maintain and shall require each of the Contractor Parties to maintain, accurate and complete Records. The Contractor shall make all of its and the Contractor Parties' Records available at all reasonable hours for audit and inspection by the State and its agents.

(c) The State shall make all requests for any audit or inspection in writing and shall provide the Contractor with at least twenty-four (24) hours' notice prior to the requested audit and inspection date. If the State suspects fraud or other abuse, or in the event of an emergency, the State is not obligated to provide any prior notice.

(d) The Contractor shall keep and preserve or cause to be kept and preserved all of its and Contractor Parties' Records until three (3) years after the latter of (i) final payment under this Agreement, or (ii) the expiration or earlier termination of this Agreement, as the same may be modified for any reason. The State may request an audit or inspection at any time during this period. If any Claim or audit is started before the expiration of this period, the Contractor shall retain or cause to be retained all Records until all Claims or audit findings have been resolved.

(e) The Contractor shall cooperate fully with the State and its agents in connection with an audit or inspection. Following any audit or inspection, the State may conduct, and the Contractor shall cooperate with an exit conference.

(f) The Contractor shall incorporate this entire Section verbatim into any contract or other agreement that it enters into with any Contractor Party.

16. Campaign Contribution Restriction

For all State contracts, defined in section 9-612 of the Connecticut General Statutes as having a value in a calendar year of $50,000 or more, or a combination or series of such agreements or contracts having a value of $100,000 or more, the authorized signatory to this Contract represents that they have received the State Elections Enforcement Commission's notice advising state contractors of state campaign contribution and solicitation prohibitions, and will inform its principals of the contents of the notice.

17. Tangible Personal Property

(a) The Contractor on its behalf and on behalf of its Affiliates, as defined below, shall comply with the provisions of Conn. Gen. Stat. §12-411b, as follows:

(1) For the term of the Contract, the Contractor and its Affiliates shall collect and remit to the State of Connecticut, Department of Revenue Services, any Connecticut use tax due under the provisions of Chapter 219 of the Connecticut General Statutes for items of tangible personal property sold by the Contractor or by any of its Affiliates in the same manner as if the Contractor and such Affiliates were engaged in the business of selling tangible personal property for use in Connecticut and had sufficient nexus under the provisions of Chapter 219 to be required to collect Connecticut use tax;

(2) A customer's payment of a use tax to the Contractor or its Affiliates relieves the customer of liability for the use tax;

(3) The Contractor and its Affiliates shall remit all use taxes they collect from customers on or before the due date specified in the Contract, which may not be later than the last day of the month next succeeding the end of a calendar quarter or other tax collection period during which the tax was collected;
(4) The Contractor and its Affiliates are not liable for use tax billed by them but not paid to them by a customer; and
(5) Any Contractor or Affiliate who fails to remit use taxes collected on behalf of its customers by the due date specified in the Contract shall be subject to the interest and penalties provided for persons required to collect sales tax under chapter 219 of the general statutes.

(b) For purposes of this section of the Contract, the word "Affiliate" means any person, as defined in section 12-1 of the general statutes, that controls, is controlled by, or is under common control with another person. A person controls another person if the person owns, directly or indirectly, more than ten per cent of the voting securities of the other person. The word "voting security" means a
security that confers upon the holder the right to vote for the election of members of the board of directors or similar governing body of the business, or that is convertible into, or entitles the holder to receive, upon its exercise, a security that confers such a right to vote. "Voting security" includes a general partnership interest.

(c) The Contractor represents and warrants that each of its Affiliates has vested in the Contractor plenary authority to so bind the Affiliates in any agreement with the State of Connecticut. The Contractor on its own behalf and on behalf of its Affiliates shall also provide, no later than 30 days after receiving a request by the State's contracting authority, such information as the State may require to ensure, in the State's sole determination, compliance with the provisions of Chapter 219 of the Connecticut General Statutes, including, but not limited to, §12-411b.

18. Bid Rigging and/or Fraud – Notice to Contractor

The Connecticut Department of Transportation is cooperating with the U.S. Department of Transportation and the Justice Department in their investigation into highway construction contract bid rigging and/or fraud.

A toll-free "HOT LINE" telephone number 800-424-9071 has been established to receive information from contractors, subcontractors, manufacturers, suppliers or anyone with knowledge of bid rigging and/or fraud, either past or current. The "HOT LINE" telephone number will be available during normal working hours (8:00 am – 5:00 pm EST). Information will be treated confidentially, and anonymity respected.

19. Consulting Agreement Representation

Pursuant to section 4a-81 of the Connecticut General Statutes, the person signing this Contract on behalf of the Contractor represents, to their best knowledge and belief and subject to the penalty of false statement as provided in section 53a-157b of the Connecticut General Statutes, that the Contractor has not entered into any consulting agreements in connection with this Contract, except for the agreements listed below or in an attachment to this Contract. "Consulting agreement" means any written or oral agreement to retain the services, for a fee, of a consultant for the purposes of (A) providing counsel to a contractor, vendor, consultant or other entity seeking to conduct, or conducting, business with the State, (B) contacting, whether in writing or orally, any executive, judicial, or administrative office

of the State, including any department, institution, bureau, board, commission, authority, official or employee for the purpose of solicitation, dispute resolution, introduction, requests for information, or (C) any other similar activity related to such contracts. "Consulting agreement" does not include any agreements entered into with a consultant who is registered under the provisions of chapter 10 of the Connecticut General Statutes as of the date such contract is executed in accordance with the provisions of section 4a-81 of the Connecticut General Statutes.

_____

Consultant's Name and Title Name of Firm (if applicable)

_____ _____ _____

Start Date End Date Cost

The basic terms of the consulting agreement are: _____

_____

_____

Description of Services Provided:

Is the consultant a former State employee or former public official? ☐ YES ☐ NO

If YES:_____ _____

Name of Former State Agency Termination Date of Employment

20. Sovereign Immunity

The parties acknowledge and agree that nothing in the Solicitation or the Contract shall be construed as a modification, compromise or waiver by the State of any rights or defenses of any immunities provided by Federal law or the laws of the State of Connecticut to the State or any of its officers and employees, which they may have had, now have or will have with respect to all matters arising out of the Contract. To the extent that this section conflicts with any other section, this section shall govern.

21. Large State Contract Representation for Contractor

Pursuant to section 4-252 of the Connecticut General Statutes and Acting Governor Susan Bysiewicz Executive Order No. 21-2, promulgated July 1, 2021, the Contractor, for itself and on behalf of all of its principals or key personnel who submitted a bid or proposal, represents:

(1) That no gifts were made by (A) the Contractor, (B) any principals and key personnel of the Contractor, who participate substantially in preparing bids, proposals or negotiating State contracts, or (C) any agent of the Contractor or

principals and key personnel, who participates substantially in preparing bids, proposals or negotiating State contracts, to (i) any public official or State employee of the State agency or quasi- public agency soliciting bids or proposals for State contracts, who participates substantially in the preparation of bid solicitations or requests for proposals for State contracts or the negotiation or award of State contracts, or (ii) any public official or State employee of any other State agency, who has supervisory or appointing authority over such State agency or quasi-public agency;

(2) That no such principals and key personnel of the Contractor, or agent of the Contractor or of such principals and key personnel, knows of any action by the Contractor to circumvent such prohibition on gifts by providing for any other principals and key personnel, official, employee or agent of the Contractor to provide a gift to any such public official or State employee; and

(3) That the Contractor is submitting bids or proposals without fraud or collusion with any person.

22. Large State Contract Representation for Official or Employee of State Agency

Pursuant to section 4-252 of the Connecticut General Statutes and Acting Governor Susan Bysiewicz Executive Order No. 21-2, promulgated July 1, 2021, the State agency official or employee represents that the selection of the person, firm or corporation was not the result of collusion, the giving of a gift or the promise of a gift, compensation, fraud or inappropriate influence from any person.

23. Iran Investment Energy Certification

(a) Pursuant to section 4-252a of the Connecticut General Statutes, the Contractor certifies that it has not made a direct investment of twenty million dollars or more in the energy sector of Iran on or after October 1, 2013, as described in Section 202 of the Comprehensive Iran Sanctions, Accountability and Divestment Act of 2010, and has not increased or renewed such investment on or after said date.

(b) If the Contractor makes a good faith effort to determine whether it has made an investment described in subsection (a) of this section, then the Contractor shall not be deemed to be in breach of the Contract or in violation of this section. A "good faith effort" for purposes of this subsection includes a determination that the Contractor is not on the list of persons who engage in certain investment activities in Iran created by the Department of General Services of the State of California pursuant to Division 2, Chapter 2.7 of the California Public Contract Code. Nothing in this subsection shall be construed to impair the ability of the State agency or quasi-public agency to pursue a breach of contract action for any violation of the provisions of the Contract.

24. Access to Contract and State Data

The Contractor shall provide to the Client Agency access to any data, as defined in Conn. Gen Stat. Sec. 4e-1, concerning the Contract and the Client Agency that are in the possession or control of the Contractor upon demand and shall provide the data to the Client Agency in a format prescribed by the Client Agency and the State Auditors of Public Accounts at no additional cost.

25. Affirmative Action Policy Statement

The Contractor shall comply with the Affirmative Action Policy Statement, as applicable, attached at Exhibit B and hereby made part of this Contract.

26. Compliance with Consumer Data Privacy and Online Monitoring

Pursuant to section 4e-72a of the Connecticut General Statutes, Contractor shall at all times comply with all applicable provisions of sections 42-515 to 42-525, inclusive, of the Connecticut General Statutes, as the same may be revised or modified.

EXHIBIT A

CONNECTICUT REQUIRED
SPECIFIC EQUAL EMPLOYMENT OPPORTUNITY RESPONSIBILITIES
October 2023

1. <u>General:</u>

a) Equal employment opportunity requirements not to discriminate and to take affirmative action to assure equal employment opportunity as required by Executive Order 11246, Executive Order 11375 are set forth in Required Contract Provisions (Form PR-1273 or 1316, as appropriate) and these Special Provisions which are imposed pursuant to Section 140 of Title 23 U.S.C., as established by Section 22 of the Federal-Aid Highway Act of 1968, 49 CFR
Part 21, 4a-60a and 46a-68c to46a-68f of the Connecticut General Statutes. The requirements set forth in these Special Provisions shall constitute the specific affirmative action requirements for project activities under this contract and supplement the equal employment opportunity requirements set forth in the Required Contract Provisions.

b) "Company" refers to any entity doing business with the Connecticut Department of Transportation and includes but is not limited to the following:

Contractors and Subcontractors
Consultants and Subconsultants
Suppliers of Materials and Vendors (where applicable)
Municipalities (where applicable)
Utilities (where applicable)

c) The Company will work with the Connecticut Department of Transportation (CTDOT) and the Federal Government in carrying out equal employment opportunity obligations and in their review of his/her activities under the contract.

d) The Company and all his/her subcontractors or subconsultants holding subcontracts not including material suppliers, of $10,000 or more, will comply with the following minimum specific requirement activities of equal employment opportunity: (The equal employment opportunity requirements of Executive Order 11246, as set forth in volume 60, Chapter 4, Section 1, subsection 1 of the Federal-Aid Highway Program Manual, are applicable to material suppliers as well as contractors and subcontractors.) The company will include these requirements in every subcontract of $10,000 or more with such modification of language as necessary to make them binding on the subcontractor or subconsultant.

e) CTDOT shall require each contractor with contracts of $10,000 or more or who have fifty or more employees and are awarded a public works contract, to comply with all existing procedures of CTDOT's Contract Compliance Program.

2. <u>Equal Employment Opportunity Policy:</u>

a) Companies with contracts, agreements or purchase orders valued at $10,000 or more or who have fifty or more employees are required to comply with the Affirmative Action contract requirements. By signing a contract with CTDOT the contractor's commits to complying with federal and state requirements to provide equal employment opportunity to all persons without regard to their race, color, religion, creed, sex, gender identity or expression, marital status, age, national origin, ancestry, status as a veteran, intellectual disability, mental disability, learning disability or physical disability, including but not limited to blindness, unless such disability prevents performance of the work involved and to promote the full realization of equal employment opportunity through a positive and continuous efforts.

3. <u>Project Workforce Utilization Goals:</u>

These goals are applicable to all construction projects performed in the covered area work (whether the project is federal or state funded). If the contractor performs construction work in a geographical area located outside of the covered area, it shall apply the goals established for the geographical area where the work is actually performed.

a. Appendix A establishes the goals for minority and female utilization in all crafts statewide on all State Funded construction projects.

b. Appendix B establishes the goals for minority and female utilization in all crafts statewide on Federally assisted or funded construction projects.

Whenever the Contractor, or any Subcontractor at any tier, subcontracts a portion of the work involving any construction trade, it shall physically include in each subcontract in excess of $10,000 the provisions of these specifications which contain the applicable goals for minority and female participation.

The goals for minority and female participation are expressed in percentage terms for the contractor's aggregate workforce in each trade on all construction work in the covered area, are as follows:

State Utilization Goals See Appendix A
Federal Utilization Goals See Appendix B

4. Executive Order 11246

The Contractor's compliance with Executive Order 11246 and 41-CFR Part 60-4 shall be based on its implementation of the specific affirmative action obligations required by the specifications set forth in 41 CFR 60-4.3(A) and its efforts to meet the goals established for the geographical area where the contract is to be performed. The hours of minority and female employment and training must be substantially uniform throughout the length of the contract, and in each trade, and the contractor shall make a good faith effort to employ minorities and women evenly on each of its projects. The transfer of minority or female employees or trainees from contractor to contractor or from project to project for the sole purpose of meeting the contractor's goals shall be a violation of the contract, the Executive Order and the regulations in 41 CFR Part 60-4. Compliance with the goals will be measured against the total work hour performed.

If the Contractor is participating (pursuant to 41 CFR 60-4.5) in a Hometown Plan approved by the U.S. Department of Labor in the covered area either individually or through an association, its affirmative action obligations on all work in the Plan area (including goals and timetables) shall be in accordance with that Plan for those trades which have unions participating in the Plan.
Contractors must be able to demonstrate their participation in and compliance with the provisions of any such Hometown Plan. Each Contractor or Subcontractor participating in an approved Plan is individually required to comply with its obligations under the EEO clause, and to make a good faith effort to achieve each goal under the Plan in each trade in which it has employees. The overall good faith performance by other Contractors or subcontractors toward a goal in an approved Pan does not excuse any covered Contractor's of subcontractor's failure to take good faith efforts to achieve the plan goals and timetables.

The Contractor shall implement the specific affirmative action standards provided in a through p of these specifications. The goals set forth in the solicitation from which this contract resulted are expressed as percentages of the total hours of employment and training of minority and female utilization the Contractor should reasonably be able to achieve in each construction trade in which it has employees in the covered area. Covered Construction contractors performing construction work in geographical areas where they do not have a federal or federally assisted construction contract shall apply the minority and female goals established for the geographical area where the work is being performed. Goals are published periodically in the Federal

Register in notice form and such notices may be obtained from any Office of Federal Contract Compliance Programs (OFCCP) Office or from Federal procurement contracting officers. The Contractor is expected to make substantially uniform progress in meeting its goals in each craft during the period specified.

Neither the provisions of any collective bargaining agreement, nor the failure by a union with whom the Contractor has a collective bargaining agreement, to refer either minorities or women shall excuse the Contractors obligations under these specifications, Executive Order 11246, or the regulations promulgated pursuant hereto.

In order for the nonworking training hours of apprentices and trainees to be counted in meeting the workforce utilization goals, such apprentices and trainees must be employed by the Contractor during the training period, and the Contractor must have made a commitment to employ the apprentices and trainees at the completion of their training, subject to the availability of employment opportunities. Trainees must be trained pursuant to training programs approved by the
U.S. Department of Labor.

The Contractor shall take specific affirmative actions to ensure equal employment opportunity. The evaluation of the Contractor's compliance with these specifications shall be based upon its effort to achieve maximum results from its actions. The Contractor shall document these efforts fully, and shall implement affirmative action steps at least as extensive as the following:

a) Ensure and maintain a working environment free of harassment, intimidation, and coercion at all sites; and in all facilities at which the Contractor's employees are assigned to work. The Contractor, where possible, will assign two or more women to each construction project. The Contractor shall specifically ensure that all foremen, superintendents, and other on-site supervisory personnel are aware of and carry out the Contractor's obligation to maintain such a working environment, with specific attention to minority or female individuals working at such sites or in such facilities.

b) Establish and maintain a current list of minority and female recruitment sources, provide written notification to minority and female recruitment sources and to community organizations when the Contractor or its unions have employment opportunities available, and maintain a record of the organizations' responses.

c) Maintain a current file of the names, addresses and telephone numbers of each minority and female off the street applicant and minority or female referral from a union, a recruitment source or community organization and of what action was taken with respect to each such individual. If such individual was sent to the union hiring hall for referral and was not referred back to the Contractor by the union or, if referred, not employed by the Contractor, this shall be documented in the file with the reason thereafter; along with whatever additional actions the Contractor may have taken.

d) Provide immediate written notification to CTDOT when the Union or Unions with which the Contractor has a collective bargaining agreement has not referred to the Contractor a minority person or women sent by the Contractor, or when the Contractor has other

information that the Union referral process has impeded the Contractor's efforts to meet its obligations.

e) Develop on-the-job training opportunities and/or participate in training programs that which expressly target minorities and women, including upgrading programs and apprenticeship and trainee programs relevant to the Contractor's employment needs, especially those programs funded or approved by the Department of Labor. The Contractor shall provide notice of these programs to the sources compiled under b above.

f) Disseminate the Contractor's EEO policy by providing notice of the policy to unions and training programs and requesting their cooperation in assisting the Contractor in meeting its EEO obligations. Review at least annually, the company EEO Policy and affirmative action obligations with all employees having any responsibility for hiring, assignments, layoffs, terminations, or other employment decisions, prior to the initiation of construction work at any job site. A written record shall be made and maintained identifying the time and place of these meetings, persons attending, subject matter discussed, and disposition of the subject matter.

g) Disseminate the Contractor's EEO Policy externally by including it in any advertising in the news media, specifically including minority and female news media, and providing written notification to and discussing the Contractor's EEO policy with other Contractors and subcontractors with whom the Contractor does or anticipates doing business.

h) Direct its recruitment efforts, both oral and written, to minority female and community organizations, to schools with minority and female students and to minority and female recruitment and training organizations serving the Contractor's recruitment area and employment needs. Not later than one month prior to the date for the acceptance of applications for apprenticeship or other training by any recruitment source, the contractor shall send written notification to organizations such as the above, describing the openings, screening procedures and tests to be used in the selection process.

i) Encourage present minority and female employees to recruit other minority persons and women and, where reasonable, provide after school, summer and vacation employment to minority and female youth both on the project worksite and in other areas of the Contractor's workforce.

j) Validate all tests and other selection requirements where there is an obligation to do so under 41 CFR Part 60-3.

k) Conduct, at least annually, an inventory and evaluation at least of all minority and female personnel for promotional opportunities and encourage these employees to seek or to prepare for opportunities through appropriate training opportunities.

l) Ensure that seniority practices, job classifications, work assignments and other personnel practices, do not have a discriminatory effect by continually monitoring all personnel and employment related activities to ensure that the EEO policy and the Contractor's obligations under these specifications are being carried out.

m) Ensure that all facilities and company activities are nonsegregated except that separate or single user toilet and necessary changing facilities shall be provided to assure privacy between the sexes.

n) Document and maintain a record of all solicitations of offers for subcontracts from minority and female construction contractors and suppliers, including circulation of solicitations to minority and female contractor associations and other business associations.

o) Conduct a review at least annually of all supervisors' adherence to and performance under the Contractor's EEO policies and affirmative action obligations:

Contractors are encouraged to participate in voluntary associations which assist in fulfilling one or more of their affirmative action obligations (a through p). The efforts of a contractor association, joint contractor union, contractor community, or other similar group of which the contractor is a member and participant, may be asserted as fulfilling any one or more of its obligations under a through p of these specifications provided that the contractor actively participates in the group, makes every effort to assure that the group has a positive impact on the employment of minorities and women in the industry, ensures that the concrete benefits of the program are reflected in the Contractor's minority and female work-force participation, makes a good faith effort to meet with individual goals and timetables, and can provide access to documentation which demonstrates the effectiveness of actions taken on behalf of the Contractor. The obligation to comply is the Contractor's and failure of such a group to fulfill an obligation shall not be a defense for the Contractor's noncompliance.

A single goal for minorities and a separate single goal for women have been established. The Contractor, however, is required to provide equal employment opportunity and to take affirmative action for all minority groups, both male and female, and all women, both minority and non- minority. Consequently, the Contractor may be in violation of Executive Order 11246 if a particular group is employed in a substantially disparate manner, (for example, even though the Contractor has achieved its goals for women generally, the Contractor may be in violation of the Executive Order if a specific minority group of women is under-utilized).

The Contractor shall not use the goals and timetables or affirmative action standards to discriminate against any person because of race, color, religion, sex, or national origin.

The Contractor shall not enter into any Subcontract with any person or firm debarred from Government contracts pursuant to Executive Order 11246.

The Contractor shall carry out such sanctions and penalties for violation of these specifications and of the Equal Opportunity Clause, including suspension, termination and cancellation of existing subcontracts as may be imposed or ordered pursuant to Executive Order 11246, as amended, and its implementing regulations by the Office of Federal Contract Compliance Programs. Any Contractor who fails to carry out such sanctions and penalties shall be in violation of these specifications and Executive Order 11246, as amended.

The Contractor, in fulfilling its obligations under these specifications, shall implement specific affirmative action steps so as to achieve maximum results from its efforts to ensure equal

employment opportunity.

The Contractor shall designate a responsible official to monitor all employment related activity to ensure that the company EEO policy is being carried out, to submit reports relating to the provisions h e r e o f as may be required by the Government and to keep records. Records shall at least include for each employee the name, address, telephone numbers, construction trade, union affiliation if any, employee identification number when assigned, social security number, race, sex, status, (e.g. mechanic, apprentice, trainee, helper, or laborer) dates of changes in status, hours worked per week in the indicated trade, rate of pay, and locations at which the work was performed. Records shall be maintained in an easily understandable and retrievable form; however, to the degree that existing records satisfy this requirement, contractors shall not be required to maintain separate records.

Nothing herein provided shall be construed as a limitation upon the application of their laws which establish different standards of compliance or upon the application of requirements for the hiring of local or other area residents (e.g., those under the Public Works Employment Act of 1977 and the Community Development Block Grant Program). The Director of the Office of Federal Contract Compliance Programs, from time to time, shall issue goals and timetables for minority and female utilization which shall be based on appropriate work- force, demographic or other relevant data and which shall cover construction projects or construction contracts performed in specific geographical areas. The goals, which shall be applicable to each construction trade in a covered contractor's or timetables, shall be published as notices in the Federal Register, and shall be inserted by the Contracting officers and applicants, as applicable, in the Notice required by 41 CFR 60-4.2.

5. <u>Subcontracting:</u>

a. The Company will use his/her best efforts to solicit bids from and to utilize minority group subcontractors or subcontractors with meaningful minority group and female representation among their employees. Companies shall obtain lists of minority-owned construction firms from the Office of Equity.

b. The Company will use its best efforts to ensure subcontractor compliance with their equal employment opportunity obligations.

6. <u>Records and Reports:</u>

a. The Company will keep such records as are necessary to determine compliance with equal employment opportunity obligations. The records kept by the Company will be designed to indicate:

1. The number of minority and non-minority group members and women employed in each classification on the project.
2. The progress and efforts being made in cooperation with unions to increase employment opportunities for minorities and women; (applicable only to contractors who rely in whole or in part on unions as a source of their work force),
3. The progress and efforts being made in locating, hiring, training, qualifying, and upgrading minority and female employees; and
4. The progress and efforts being made in securing the services of minority group

subcontractors or subcontractors with meaningful minority and female representation among their employees.

5. Records of internal and external communication and outreach to document its affirmative efforts.

b. All such records must be retained for a period of three years following completion of the contract work and shall be available at reasonable times and places for inspection by authorized representatives of CTDOT and/or the United States Department of Transportation.

c. **For Federal Highway Administration funded projects only:**
The Company will submit an annual report to CTDOT each July or as otherwise directed, for the duration of the project, indicating the number of minorities, women, and non-minority group employees currently engaged in each work classification required by the contract work. This information is to be reported on Form PR 1391. If on-the-job training is being required by "Training Special Provision", the Company will be required to furnish Form FHWA 1409 and 1415 as required by CTDOT.

STATE FUNDED PROJECTS (only)

APPENDIX A
(Labor Market Goals)

LABOR MARKET AREA GOAL ***Minority***
Female

Bridgeport				**22.7%**
1.4%				
Ansonia	Beacon Falls	Bridgeport	Derby	
Easton	Fairfield	Milford	Monroe	
Oxford	Seymour	Shelton	Stratford	
Trumbull				

Danbury				**10.7%**
3.8%				
Bethel	Bridgewater	Brookfield	Danbury	
Kent	New Fairfield	New Milford	Newtown	
Redding	Ridgefield	Roxbury	Sherman	
Washington				

Danielson				**4.3%**
1.8%				
Brooklyn	Eastford	Hampton	Killingly	
Pomfret	Putnam	Scotland	Sterling	
Thompson	Voluntown	Union	Woodstock	

Hartford				**13.7%**
2.1%				
Andover	Ashford	Avon	Barkhamsted	
Belin	Bloomfield	Bolton	Bristol	
Burlington	Canton	Chaplin	Colchester	
Columbia	Coventry	Cromwell	Durham	
East Granby	East Haddam	East Hampton	East Hartford	
East Windsor	Ellington	Enfield	Farmington	
Glastonbury	Granby	Haddam	Hartford	
Harwinton	Hebron	Lebanon	Manchester	
Mansfield	Marlborough	Middlefield	Middletown	
Newington	Plainville	Plymouth	Portland	
Rocky Hill	Simsbury	Somers	South Windsor	
Southington	Stafford	Suffield	Tolland	
Vernon	West Hartford	Wethersfield	Willington	
Winchester	Windham	Windsor	Windsor Locks	

Lower River				**4.3%**
1.8%				
Chester	Deep River	Essex	Old Lyme	
Westbrook				

LABOR MARKET AREA GOAL ***Minority***
Female

New Haven				**17.9%**
3.1%				
Bethany	Branford	Cheshire	Clinton	
East Haven	Guilford	Hamden	Killingworth	
Madison	Meriden	New Haven	North Branford	
North Haven	Orange	Wallingford	West Haven	
Woodbridge				

New London				**7.4%**
3.1%				
Bozrah	Canterbury	East Lyme	Franklin	
Griswold	Groton	Ledyard	Lisbon	
Montville	New London	North Stonington	Norwich	
Old Lyme	Old Saybrook	Plainfield	Preston	
Salem	Sprague	Stonington	Waterford	
Hopkinton	RI – Westerly Rhode Island			

Stamford				**33.2%**
2.1%				
Darien	Greenwich	New Canaan	Norwalk	
Stamford	Weston	Westport	Wilton	

Torrington				**4.3%**
1.8%				
Canaan	Colebrook	Cornwall	Goshen	
Hartland	Kent	Litchfield	Morris	
Norfolk	North Canaan	Salisbury	Sharon	
Torrington	Warren			

Waterbury				**12.4%**
1.6%				
Bethlehem	Middlebury	Naugatuck	Prospect	
Southbury	Thomaston	Waterbury	Watertown	
Wolcott	Woodbury			

EXHIBIT B

AFFIRMATIVE ACTION POLICY STATEMENT (October 2023)

It is the policy of this firm to assure that applicants are employed, and that employees are treated during employment, without regard to an individual's race, color, religion, creed, sex, gender identity or expression, marital status, national origin, age, ancestry, status as a veteran, intellectual disability, mental disability, learning disability or physical disability, including but not limited to blindness, unless such disability prevents performance of the work involved and to promote the full realization of equal employment opportunity through positive and continuous affirmative efforts. Such action shall include employment, promotion, demotion or transfer, recruitment or recruitment advertising, layoff or terminations, rates of pay or other forms of compensation, selection for training/apprenticeship, pre- apprenticeship opportunities, and on-the-job training opportunities.

This firm will implement, monitor, enforce and achieve full compliance with this Affirmative Action Policy Statement in conjunction with the applicable Federal and State laws, regulations, executive orders, and contract provisions, including but not limited to those listed below:

Dissemination of Policy:

All members of the firm who are authorized to hire, supervise, promote, and discharge employees, or who recommend such action, or who are substantially involved in such action, will be made fully cognizant of, and will implement, this firm's Equal Employment Opportunity (EEO) policy and contractual responsibilities to provide EEO in each grade and classification of employment. These actions shall include:

1. Periodic meetings of supervisory and personnel office employees will be conducted before the start of work and then not less often than once every six months, at which time the firm's EEO policy and its implementation will be reviewed and explained. These meetings will be conducted by the EEO officer.
2. All new supervisory or personnel office employees will be given a thorough indoctrination by the EEO Officer, covering all major aspects of the contractor's EEO obligations within thirty days following their reporting for duty with the contractor.
3. All personnel who are engaged in direct recruitment for the firm will be instructed by the EEO Officer of the contractor's procedures for locating and hiring minority group employees.
4. Notices and posters setting forth the firm's EEO policy will be placed in areas readily accessible to employees, applicants for employment and potential employees.
5. The firm's EEO policy and the procedures to implement such policy will be brought to the attention of employees by means of meetings, employee handbooks, or other appropriate means.
6. Sexual Harassment Prevention Resources including training and remedies must be available to all employees. See Connecticut General Assembly Public Acts 19–16 and 19–93.

Recruitment:

When advertising for employees, the firm will include in all advertisements the notation; "An Affirmative Action/Equal Opportunity Employer." All such advertisements will be placed in publications having a large circulation among minority groups in the area where the workforce would normally be derived.

1. The firm will, unless precluded by a valid bargaining agreement, conduct systematic and direct recruitment through public and private employee referral sources likely to yield qualified minority and female applicants. To meet this requirement, the firm will identify referral sources and establish procedures for recruitment to obtain the referral of minority and female applicants.
2. In the event the firm has a valid bargaining agreement providing for exclusive hiring referrals, he/she is expected to observe the provisions of that agreement to the extent that the system permits the contractor's compliance with EEO contract provisions. (The United States Department of Labor has held that where implementation of such agreements has had the effect of discriminating against minorities or women, or obligates the contractor to do the same, such implementation violates Executive Order 11246, as amended.) The firm will encourage his/her present employees to refer minority group applicants for employment. Information and procedures with regard to referring minority group applicants will be discussed with employees.

Personnel Actions:

Wages, working conditions, and employee benefits shall be established and administered, and personnel actions of every type, including hiring, upgrading, promotion, transfer, demotion, layoff, and termination, shall be taken without regard to an individual's race, color, religion, creed, sex, gender identity or expression, marital status, national origin, age, ancestry, status as a veteran, intellectual disability, mental disability, learning disability or physical disability, including but not limited to blindness, unless such disability prevents performance of the work involved. The following procedures shall be followed:

1. The firm will conduct periodic inspections of project sites to insure that working conditions and employee facilities do not indicate discriminatory treatment of personnel.
2. The firm will periodically review selected personnel actions in depth to determine whether there is evidence of discrimination. Where evidence is found, the contractor will promptly take correction action. If the review indicates that the discrimination may extend beyond the actions reviewed, such corrective action shall include all affected persons.
3. The firm shall periodically evaluate the spread of wages paid within each classification to determine any evidence of discriminatory wage practices.
4. The firm will promptly investigate all complaints of alleged discrimination made to the firm and will take appropriate corrective action within a reasonable time. If the investigation indicates that the discrimination may affect persons other than the complainant, such corrective actions shall include such other persons. Upon completion of each investigation, the contractor will inform every complainant of all of his avenues of appeal.

Training and Promotion:
The firm will assist in locating, qualifying, and increasing the skills of minorities and women. The firm will utilize the following tools to identify training and promotional opportunities in the firm:

1. The firm will advise employees and applicants for employment of available training programs and the entrance requirements.
2. The firm will periodically review the training and promotion of minority group and female employees and will encourage eligible employees to apply for such training and promotion.

Unions:
If the firm relies in whole or in part upon unions as a source of employees, the contractor will use his/her best efforts to obtain the cooperation of such unions to increase opportunities for minority groups and women within the unions, and to effect referrals by such unions of minority and female employees. Actions by the firm either directly or through a contractor's association acting as agent will include the procedures set forth below:

1. The firm will use best efforts to develop, in cooperation with the unions, joint training programs aimed toward qualifying more minority group members and women for membership in the unions and increasing the skills of minority group employees and women so that they may qualify for higher paying employment.
2. The firm will use best efforts to incorporate an EEO clause into each union agreement to the extent that such union will be contractually bound to refer applicants without regard to their to an individual's race, color, religion, creed, sex, gender identity or expression, marital status, national origin, age, ancestry, status as a veteran, intellectual disability, mental disability,
   learning disability or physical disability, including but not limited to blindness, unless such disability prevents performance of the work involved.
3. The firm is to obtain information as to the referral practices and policies of the labor union except that to the extent that such information is within the exclusive possession of the labor union and such labor union refuses to furnish the information to the contractor, the contractor shall notify the Connecticut Department of Transportation (CTDOT) of the efforts made to obtain the information.
4. In the event the union is unable to provide the firm with a reasonable flow of minority and women referrals within the time limit set forth in the collective bargaining agreement, the contractor will, through independent recruitment efforts, fill the employment vacancies. (The United States Department of Labor has held that it shall be no excuse that the union with which the contractor has a collective bargaining agreement providing for exclusive referral failed to refer minority employees.) In the event the union referral practice prevents the contractor from meeting the obligations under Executive Order 11246 as amended, and in compliance with 23 CFR Part 230, the firm will notify CTDOT.

Selection of Subcontractors:
The firm will not discriminate on the grounds race, color, religion, sex, sexual orientation, gender identity or expression, marital status, national origin, ancestry, age, intellectual

disability, learning disability, physical disability, including, but not limited to, blindness, or status as a veteran in the selection and retention of subcontractors, including procurement of materials and leases of equipment.

1. The firm shall use his/her best efforts to ensure subcontractor/subconsultant compliance with Federal and State Equal Opportunity (EO) and EEO requirements.

Records and Reports:
The Contractor shall keep records as necessary to document compliance with EO/EEO requirements. Such reports shall be retained for a period of three years following completion of the contract work and shall be available at reasonable times and places for inspection by authorized representatives of CTDOT and/or the United States Department of Transportation. The following records should be maintained:

6. The number of minority and non-minority group members and women employed in each work classification;
7. The progress and efforts being made in cooperation with unions, when applicable to increase the employment opportunities for minorities and women;
8. The documentation showing progress and efforts being made in locating, hiring, training, qualifying, and upgrading minority and female employees; and
9. Complaints of Discrimination.

In implementing this policy and ensuring that affirmative action is being provided, each time a hiring opportunity occurs this firm will contact and request referrals from minority and female organizations, referral sources, and media sources. All advertising will emphasize that the firm is "An Affirmative Action/Equal Opportunity Employer."

In order to substantiate this firm's efforts and affirmative actions to provide equal opportunity, the firm will maintain and submit, as requested, documentation such as referral request correspondence, copies of advertisements utilized and follow-up documentation to substantiate that efforts were made in good faith. This firm will maintain the necessary internal audit procedures and record keeping systems to report the firm's affirmative action efforts.

It is understood by Owner/CEO/President of the firm and the firm's Equal Employment Opportunity Officer and supervisory and managerial personnel that failure to effectively implement, monitor and enforce this firm's affirmative action program and/or failure to adequately document and submit as required, the affirmative actions taken and efforts made to recruit and hire minority and female applicants in accordance with our affirmative action program in each instance of hire, will result in this firm being required to recommit itself to a modified and more stringent affirmative action program as a condition of approval. It is recognized that this policy is a contractual requirement and is a prerequisite for performing services for the contracting agency. This policy in addition to CTDOT's EO/EEO contract provisions and requirements, shall constitute the CTDOT Affirmative Program requirements.

The ultimate responsibility for the full implementation of this firm's Affirmative Action

Program rests with the Chief Executive Officer of this firm.

Rev. 4/24/2019

EXHIBIT C

Health Insurance Portability and Accountability Act of 1996 ("HIPAA").

(a) If the Contactor is a Business Associate under the requirements of the Health Insurance Portability and Accountability Act of 1996 ("HIPAA"), the Contractor must comply with all terms and conditions of this Section of the Contract. If the Contractor is not a Business Associate under HIPAA, this Section of the Contract does not apply to the Contractor for this Contract.

(b) The Contractor is required to safeguard the use, publication and disclosure of information on all applicants for, and all clients who receive, services under the Contract in accordance with all applicable federal and state law regarding confidentiality, which includes but is not limited to HIPAA, more specifically with the Privacy and Security Rules at 45 C.F.R. Part 160 and Part 164, subparts A, C, and E; and

(c) The State of Connecticut Agency named on page 1 of this Contract (hereinafter the "Department") is a "covered entity" as that term is defined in 45 C.F.R. § 160.103; and

(d) The Contractor, on behalf of the Department, performs functions that involve the use or disclosure of "individually identifiable health information," as that term is defined in 45
C.F.R. § 160.103; and

(e) The Contractor is a "business associate" of the Department, as that term is defined in 45 C.F.R. § 160.103; and

(f) The Contractor and the Department agree to the following in order to secure compliance with the HIPAA, the requirements of Subtitle D of the Health Information Technology for Economic and Clinical Health Act (hereinafter the HITECH Act), (Pub. L. 111-5, sections13400 to 13423), and more specifically with the Privacy and Security Rules at 45 C.F.R. Part 160 and Part 164, subparts A, C, and E.

(g) Definitions

(1) "Breach shall have the same meaning as the term is defined in section 13400 of the HITECH Act (42 U.S.C. §17921(1))

(2) "Business Associate" shall mean the Contractor.

(3) "Covered Entity" shall mean the Department of the State of Connecticut named on page 1

of this Contract.

(4) "Designated Record Set" shall have the same meaning as the term "designated record set" in 45 C.F.R. § 164.501.

(5) "Electronic Health Record" shall have the same meaning as the term is defined in section 13400 of the HITECH Act (42 U.S.C. §17921(5))

(6) "Individual" shall have the same meaning as the term "individual"' in 45 C.F.R. § 160.103 and shall include a person who qualifies as a personal representative as defined in 45 C.F.R. § 164.502(g).

(7) "Privacy Rule" shall mean the Standards for Privacy of Individually Identifiable Health Information at 45 C.F.R. part 160 and parts 164, subparts A and E.

(8) "Protected Health Information" or "PHI" shall have the same meaning as the term "protected health information" in 45 C.F.R. § 160.103, limited to information created or received by the Business Associate from or on behalf of the Covered Entity.

(9) "Required by Law"' shall have the same meaning as the term "required by law" in 45 C.F.R. § 164.103.

(10) "Secretary" shall mean the Secretary of the Department of Health and Human Services or his designee.

(11) "More stringent" shall have the same meaning as the term "more stringent" in 45 C.F.R. § 160.202.

(12) "This Section of the Contract" refers to the HIPAA Provisions stated herein, in their entirety.

(13) "Security Incident" shall have the same meaning as the term "security incident" in 45 C.F.R.§ 164.304.

(14) "Security Rule" shall mean the Security Standards for the Protection of Electronic Protected Health Information at 45 C.F.R. part 160 and parts 164, subpart A and C.

(15) "Unsecured protected health information" shall have the same meaning as the term as defined in section 13402(h)(1)(A) of HITECH. Act. (42 U.S.C. §17932(h)(1)(A)).

(h) Obligations and Activities of Business Associates.

(1) Business Associate agrees not to use or disclose PHI other than as permitted or required by this Section of the Contract or as Required by Law.

(2) Business Associate agrees to use appropriate safeguards to prevent use or disclosure of PHI other than as provided for in this Section of the Contract.

(3) Business Associate agrees to use administrative, physical and technical safeguards that reasonably and appropriately protect the confidentiality, integrity, and availability of electronic protected health information that it creates, receives, maintains, or transmits on behalf of the Covered Entity.

(4) Business Associate agrees to mitigate, to the extent practicable, any harmful effect that is known to the Business Associate of a use or disclosure of PHI by Business Associate in violation of this Section of the Contract.

(5) Business Associate agrees to report to Covered Entity any use or disclosure of PHI not provided for by this Section of the Contract or any security incident of which it becomes aware.

(6) Business Associate agrees to ensure that any agent, including a subcontractor, to whom it provides PHI received from, or created or received by Business Associate, on behalf of the Covered Entity, agrees to the same restrictions and conditions that apply through this Section of the Contract to Business Associate with respect to such information.

(7) Business Associate agrees to provide access, at the request of the Covered Entity, and in the time and manner agreed to by the parties, to PHI in a Designated Record Set, to Covered Entity or, as directed by Covered Entity, to an Individual in order to meet the requirements under 45 C.F.R. § 164.524.

(8) Business Associate agrees to make any amendments to PHI in a Designated Record Set that the Covered Entity directs or agrees to pursuant to 45 C.F.R. § 164.526 at the request of the Covered Entity, and in the time and manner agreed to by the parties.

(9) Business Associate agrees to make internal practices, books, and records, including policies and procedures and PHI, relating to the use and disclosure of PHI received from, or created or received by, Business Associate on behalf of Covered Entity, available to Covered Entity or to the Secretary in a time and manner agreed to by the parties or designated by the Secretary, for purposes of the Secretary determining Covered Entity's compliance with the Privacy Rule.

(10) Business Associate agrees to document such disclosures of PHI and information related to such disclosures as would be required for Covered Entity to respond to a request by an Individual for an accounting of disclosures of PHI in accordance with 45 C.F.R. § 164.528 and section 13405 of the HITECH Act (42 U.S.C. § 17935) and any regulations promulgated thereunder.

(11) Business Associate agrees to provide to Covered Entity, in a time and manner agreed to by the parties, information collected in accordance with clause h. (10) of this Section of the Contract, to permit Covered Entity to respond to a request by an Individual for an

accounting of disclosures of PHI in accordance with 45 C.F.R. § 164.528 and section 13405 of the HITECH Act (42 U.S.C. § 17935) and any regulations promulgated thereunder. Business Associate agrees at the Covered Entity's direction to provide an accounting of disclosures of PHI directly to an individual in accordance with 45 C.F.R. § 164.528 and section 13405 of the HITECH Act (42 U.S.C. § 17935) and any regulations promulgated thereunder.

(12)Business Associate agrees to comply with any state or federal law that is more stringent than the Privacy Rule.

(13) Business Associate agrees to comply with the requirements of the HITECH Act relating to privacy and security that are applicable to the Covered Entity and with the requirements of 45 C.F.R. sections 164.504(e), 164.308, 164.310, 164.312, and 164.316.

(14) In the event that an individual requests that the Business Associate (a) restrict disclosures of PHI; (b) provide an accounting of disclosures of the individual's PHI; or (c) provide a copy of the individual's PHI in an electronic health record, the Business Associate agrees to notify the covered entity, in writing, within two business days of the request.

(15) Business Associate agrees that it shall not, directly or indirectly, receive any remuneration in exchange for PHI of an individual without (1) the written approval of the covered entity, unless receipt of remuneration in exchange for PHI is expressly authorized by this Contract and (2) the valid authorization of the individual, except for the purposes provided under section 13405(d)(2) of the HITECH Act,(42 U.S.C. § 17935(d)(2)) and in any accompanying regulations

(16) Obligations in the Event of a Breach

A. The Business Associate agrees that, following the discovery of a breach of unsecured protected health information, it shall notify the Covered Entity of such breach in accordance with the requirements of section 13402 of HITECH (42 U.S.C. 17932(b) and the provisions of this Section of the Contract.
B. Such notification shall be provided by the Business Associate to the Covered Entity without unreasonable delay, and in no case later than 30 days after the breach is discovered by the Business Associate, except as otherwise instructed in writing by a law enforcement official pursuant to section 13402 (g) of HITECH (42 U.S.C. 17932(g)). A breach is considered discovered as of the first day on which it is, or reasonably should have been, known to the Business Associate. The notification shall include the identification and last known address, phone number and email address of each individual (or the next of kin of the individual if the individual is deceased) whose unsecured protected health information has been or is reasonably believed by the Business Associate to have been, accessed, acquired, or disclosed during such breach.
C. The Business Associate agrees to include in the notification to the Covered Entity at

least the following information:

1. A brief description of what happened, including the date of the breach and the date of the discovery of the breach, if known.

2. A description of the types of unsecured protected health information that were involved in the breach (such as full name, Social Security number, date of birth, home address, account number, or disability code).

3. The steps the Business Associate recommends that individuals take to protect themselves from potential harm resulting from the breach.

4. A detailed description of what the Business Associate is doing to investigate the breach, to mitigate losses, and to protect against any further breaches.

5. Whether a law enforcement official has advised either verbally or in writing the Business Associate that he or she has determined that notification or notice to individuals or the posting required under section 13402 of the HITECH Act would impede a criminal investigation or cause damage to national security and; if so, include contact information for said official.

D. Business Associate agrees to provide appropriate staffing and have established procedures to ensure that individuals informed by the Covered Entity of a breach by the Business Associate have the opportunity to ask questions and contact the Business Associate for additional information regarding the breach. Such procedures shall include a toll-free telephone number, an e-mail address, a posting on its Web site and a postal address. Business Associate agrees to include in the notification of a breach by the Business Associate to the Covered Entity, a written description of the procedures that have been established to meet these requirements. Costs of such contact procedures will be borne by the Contractor.

E. Business Associate agrees that, in the event of a breach, it has the burden to demonstrate that it has complied with all notification's requirements set forth above, including evidence demonstrating the necessity of a delay in notification to the Covered Entity.

(i) Permitted Uses and Disclosure by Business Associate.

(1) General Use and Disclosure Provisions Except as otherwise limited in this Section of the Contract, Business Associate may use or disclose PHI to perform functions, activities, or services for, or on behalf of, Covered Entity as specified in this Contract, provided that such use or disclosure would not violate the Privacy Rule if done by Covered Entity or the minimum necessary policies and procedures of the Covered Entity.

(2) Specific Use and Disclosure Provisions

(A) Except as otherwise limited in this Section of the Contract, Business Associate may use PHI for the proper management and administration of Business Associate or to carry out the legal responsibilities of Business Associate.

(B) Except as otherwise limited in this Section of the Contract, Business Associate may disclose PHI for the proper management and administration of Business Associate, provided that disclosures are Required by Law, or Business Associate obtains reasonable assurances from the person to whom the information is disclosed that it will remain confidential and used or further disclosed only as Required by Law or for the purpose for which it was disclosed to the person, and the person notifies Business Associate of any instances of which it is aware in which the confidentiality of the information has been breached.

(C) Except as otherwise limited in this Section of the Contract, Business Associate may use PHI to provide Data Aggregation services to Covered Entity as permitted by 45 C.F.R. § 164.504(e)(2)(i)(B).

(j) Obligations of Covered Entity.

(1) Covered Entity shall notify Business Associate of any limitations in its notice of privacy practices of Covered Entity, in accordance with 45 C.F.R. § 164.520, or to the extent that such limitation may affect Business Associate's use or disclosure of PHI.

(2) Covered Entity shall notify Business Associate of any changes in, or revocation of, permission by Individual to use or disclose PHI, to the extent that such changes may affect Business Associate's use or disclosure of PHI.

(3) Covered Entity shall notify Business Associate of any restriction to the use or disclosure of PHI that Covered Entity has agreed to in accordance with 45 C.F.R. § 164.522, to the extent that such restriction may affect Business Associate's use or disclosure of PHI.

(k) Permissible Requests by Covered Entity. Covered Entity shall not request Business Associate to use or disclose PHI in any manner that would not be permissible under the Privacy Rule if done by the Covered Entity, except that Business Associate may use and disclose PHI for data aggregation, and management and administrative activities of Business Associate, as permitted under this Section of the Contract.

(l) Term and Termination.

(1) Term. The Term of this Section of the Contract shall be effective as of the date the Contract is effective and shall terminate when the information collected in accordance with clause h. (10) of this Section of the Contract is provided to the Covered Entity and all of the PHI provided by Covered Entity to Business Associate, or created or received by Business Associate on behalf of Covered Entity, is destroyed or returned to Covered Entity, or, if it is infeasible to return or destroy PHI, protections are extended to such

information, in accordance with the termination provisions in this Section. Termination for Cause Upon Covered Entity's knowledge of a material breach by Business Associate, Covered Entity shall either:

(A) Provide an opportunity for Business Associate to cure the breach or end the violation and terminate the Contract if Business Associate does not cure the breach or end the violation within the time specified by the Covered Entity; or

(B) Immediately terminate the Contract if Business Associate has breached a material term of this Section of the Contract and cure is not possible; or

(C) If neither termination nor cure is feasible, Covered Entity shall report the violation to the Secretary.

(2) Effect of Termination

(A) Except as provided in (l)(2) of this Section of the Contract, upon termination of this Contract, for any reason, Business Associate shall return or destroy all PHI received from Covered Entity or created or received by Business Associate on behalf of Covered Entity. Business Associate shall also provide the information collected in accordance with clause h. (10) of this Section of the Contract to the Covered Entity within ten business days of the notice of termination. This provision shall apply to PHI that is in the possession of subcontractors or agents of Business Associate. Business Associate shall retain no copies of the PHI.

(B) In the event that Business Associate determines that returning or destroying the PHI is infeasible, Business Associate shall provide to Covered Entity notification of the conditions that make return or destruction infeasible. Upon documentation by Business Associate that return or destruction of PHI is infeasible, Business Associate shall extend the protections of this Section of the Contract to such PHI and limit further uses and disclosures of PHI to those purposes that make return or destruction infeasible, for as long as Business Associate maintains such PHI. Infeasibility of the return or destruction of PHI includes, but is not limited to, requirements under state or federal law that the Business Associate maintains or preserves the PHI or copies thereof.

(m) Miscellaneous Provisions.

(1) Regulatory References. A reference in this Section of the Contract to a section in the Privacy Rule means the section as in effect or as amended.

(2) Amendment. The Parties agree to take such action as in necessary to amend this Section of the Contract from time to time as is necessary for Covered Entity to comply with requirements of the Privacy Rule and the Health Insurance Portability and Accountability Act of 1996, Pub. L. No. 104-191.

(3) Survival. The respective rights and obligations of Business Associate shall survive the termination of this Contract. Effect on Contract. Except as specifically required to implement the purposes of this Section of the Contract, all other terms of the Contract shall remain in force and effect.

(4) Construction. This Section of the Contract shall be construed as broadly as necessary to implement and comply with the Privacy Standard. Any ambiguity in this Section of the Contract shall be resolved in favor of a meaning that complies, and is consistent with, the Privacy Standard.

(5) Disclaimer. Covered Entity makes no warranty or representation that compliance with this Section of the Contract will be adequate or satisfactory for Business Associate's own purposes. Covered Entity shall not be liable to Business Associate for any claim, civil or criminal penalty, loss or damage related to or arising from the unauthorized use or disclosure of PHI by Business Associate or any of its officers, directors, employees, contractors or agents, or any third party to whom Business Associate has disclosed PHI contrary to the provisions of this Contract or applicable law. Business Associate is solely responsible for all decisions made, and actions taken, by Business Associate regarding the safeguarding, use and disclosure of PHI within its possession, custody or control.

(6) Indemnification. The Business Associate shall indemnify and hold the Covered Entity harmless from and against any and all claims, liabilities, judgments, fines, assessments, penalties, awards and any statutory damages that may be imposed or assessed pursuant to HIPAA, as amended or the HITECH Act, including, without limitation, attorney's fees, expert witness fees, costs of investigation, litigation or dispute resolution, and costs awarded thereunder, relating to or arising out of any violation by the Business Associate and its agents, including subcontractors, of any obligation of Business Associate and its agents, including subcontractors, under this section of the contract, under HIPAA, the HITECH Act, the Privacy Rule and the Security Rule.

EXHIBIT D

State Wages and Other Related Information

Please refer to the Department of Labor website for the latest updates, annual adjusted wage rate increases, certified payroll forms and applicable statutes.
http://www.ctdol.state.ct.us/wgwkstnd/prevailwage.htm

Prevailing Wage Law Poster Language

THIS IS A PUBLIC WORKS PROJECT Covered by the
PREVAILING WAGE LAW CT General Statutes Section 31-53

If you have QUESTIONS regarding your wages CALL (860) 263-6790

Section 31-55 of the CT State Statutes requires every contractor or

subcontractor
performing work for the state to post in a prominent place the prevailing wages as determined by the Labor Commissioner.

Informational Bulletin

THE 10-HOUR OSHA CONSTRUCTION SAFETY AND HEALTH COURSE
(applicable to
public building contracts entered into on or after July 1, 2007, where the total cost of all work to be performed is at least $100,000)

(1) This requirement was created by Public Act No. 06-175, which is codified in Section 31-53b of the Connecticut General Statutes (pertaining to the prevailing wage statutes);

(2) The course is required for public building construction contracts (projects funded in whole or in part by the state or any political subdivision of the state) entered into on or after July 1, 2007; It is required of private employees (not state or municipal employees) and apprentices who perform manual labor for a general contractor or subcontractor on a public building project where the total cost of all work to be performed is at least $100,000;

(3) The ten-hour construction course pertains to the ten-hour Outreach Course conducted in accordance with federal OSHA Training Institute standards, and, for telecommunications workers, a ten-hour training course conducted in accordance with federal OSHA standard, 29 CFR 1910.268;

(4) The internet website for the federal OSHA Training

Institute is
http://www.osha.gov/fso/ote/training/edcenters/fact_sheet.htm
l;

(5) The statutory language leaves it to the contractor and its employees to determine who pays for the cost of the ten-hour Outreach Course;

(6) Within 30 days of receiving a contract award, a general contractor must furnish proof to the Labor Commissioner that all employees and apprentices performing manual labor on the project will have completed such a course;

(7) Proof of completion may be demonstrated through either: (a) the presentation of a bona fide student course completion card issued by the federal OSHA Training Institute; or (2) the presentation of documentation provided to an employee by a trainer certified by the Institute pending the actual issuance of the completion card;

(8) Any card with an issuance date more than 5 years prior to the commencement date of the construction project shall not constitute proof of compliance;

(9) Each employer shall affix a copy of the construction safety course completion card to the certified payroll submitted to the contracting agency in accordance with Conn. Gen. Stat. § 31- 53(f) on which such employee's name first appears;

(10) Any employee found to be in non-compliance shall be subject to removal from the worksite if such employee does not provide satisfactory proof of course completion to the Labor Commissioner by the fifteenth day after the date the employee is determined to be in noncompliance;

(11) Any such employee who is determined to be in noncompliance may continue to work on a public building construction project for a maximum of fourteen consecutive calendar days while bringing his or her status into compliance;

(12) The Labor Commissioner may make complaint to the prosecuting authorities regarding any employer or agent of the employer, or officer or agent of the corporation who files a false certified payroll with respect to the status of an employee who is performing manual labor on a public building construction project;

(13) The statute provides the minimum standards required for the completion of a safety course by manual laborers on public construction contracts; any contractor can exceed these minimum requirements; and Regulations clarifying the statute are currently in the regulatory process and shall be posted on the CTDOL website as soon as they are adopted in final form.

(14) Any questions regarding this statute may be directed to the Wage and Workplace Standards Division of the Connecticut Labor Department via the internet website of http://www.ctdol.state.ct.us/wgwkstnd/wgemenu.htm; or by telephone at (860)263-6790.

THE ABOVE INFORMATION IS PROVIDED EXCLUSIVELY AS AN EDUCATIONAL RESOURCE AND IS NOT INTENDED AS A SUBSTITUTE FOR LEGAL INTERPRETATIONS WHICH MAY ULTMATELY ARISE CONCERNIG THE CONSTRUCTION OF THE STATUTE OR THE REGULATIONS.

November 29, 2006

Notice

To All Mason Contractors and Interested Parties Regarding Construction Pursuant to Section 31-53 of the Connecticut General Statutes (Prevailing Wage)

The Connecticut Labor Department Wage and Workplace Standards Division is empowered to enforce the prevailing wage rates on projects covered by the above referenced statute. Over the past few years, the Division has withheld enforcement of the rate in effect for workers who operate a forklift on a prevailing wage rate project due to a potential jurisdictional dispute. The rate listed in the schedules and in our Occupational Bulletin (see enclosed) has been as follows:

Forklift Operator:

- Laborers (Group 4) Mason Tenders - operates forklift solely to assist a mason to a maximum height of nine feet only.

- Power Equipment Operator (Group 9) - operates forklift to assist any trade and to assist a mason to a height over nine feet.

The U.S. Labor Department conducted a survey of rates in Connecticut, but it has not been published and the rate in effect remains as outlined in the above Occupational Bulletin.

Since this is a classification matter and not one of jurisdiction, effective January 1, 2007, the Connecticut Labor Department will enforce the rate on each schedule in accordance with our statutory authority.

Your cooperation in filing appropriate and accurate certified payrolls is appreciated.

CONNECTICUT DEPARTMENT OF LABOR
WAGE AND WORKPLACE STANDARDS
DIVISION CONTRACTORS WAGE
CERTIFICATION FORM
Construction Manager at Risk/General Contractor/Prime Contractor

CONNECTICUT DEPARTMENT OF LABOR
WAGE AND WORKPLACE STANDARDS
DIVISION CONTRACTORS WAGE
CERTIFICATION FORM
Construction Manager at Risk/General Contractor/Prime Contractor

I,__of_____,

Officer, Owner, Authorized Rep. Company Name

do hereby certify that the _____
Company Name

_____
Street

_____
City

and all of its subcontractors will pay all workers on the

_____
Project Name and Number

_____
Street and City

the wages as listed in the schedule of prevailing rates required for such project (a copy of which is attached hereto).

_____
Signature

Subscribed and sworn to before me this_____day of_____,_____.

_____
Notary Public

Return to: Connecticut Department of Labor
Wage & Workplace Standards
Division 200 Folly Brook Blvd.
Wethersfield, CT 06109

Rate Schedule Issued (Date):_____

Information Bulletin
Occupational Classifications

The Connecticut Department of Labor has the responsibility to properly determine "job classification" on prevailing wage projects covered under C.G.S. Section 31-53(d).

Note: This information is intended to provide a sample of some occupational classifications for guidance purposes only. It is not an all-inclusive list of each occupation's duties. This list is being provided only to highlight some areas where a contractor may be unclear regarding the proper classification. If unsure, the employer should seek guidelines for CTDOL.

Below are additional clarifications of specific job duties performed for certain classifications:

- **ASBESTOS WORKERS**

Applies all insulating materials, protective coverings, coatings and finishes to all types of mechanical systems.

- **ASBESTOS INSULATOR**

Handle, install apply, fabricate, distribute, prepare, alter, repair, dismantle, heat and frost insulation, including penetration and fire stopping work on all penetration fire stop systems.

- **BOILERMAKERS**

Erects hydro plants, incomplete vessels, steel stacks, storage tanks for water, fuel, etc. Builds incomplete boilers, repairs heat exchanges and steam generators.

- **BRICKLAYERS, CEMENT MASONS, CEMENT FINISHERS, MARBLE MASONS, PLASTERERS, STONE MASONS, PLASTERERS. STONE MASONS, TERRAZZO WORKERS, TILE SETTERS**

Lays building materials such as brick, structural tile and concrete cinder, glass, gypsum, terra cotta block. Cuts, tools and sets marble, sets stone, finishes concrete, applies decorative steel, aluminum and plastic tile, applies cements, sand, pigment and marble chips to floors, stairways, etc.

- **CARPENTERS, MILLWRIGHTS. PILEDRIVERMEN. LATHERS. RESILEINT FLOOR LAYERS, DOCK BUILDERS, DIKERS, DIVER TENDERS**

Constructs, erects, installs and repairs structures and fixtures of wood, plywood and wallboard. Installs, assembles, dismantles, moves industrial machinery. Drives piling into ground to provide foundations for structures such as buildings and bridges, retaining walls for earth embankments, such as cofferdams. Fastens wooden, metal or rockboard lath to walls, ceilings and partitions of buildings, acoustical tile layer, concrete form builder. Applies firestopping materials on fire resistive joint systems only. Installation of curtain/window walls only where attached to wood or metal studs. Installation of insulated material of all types whether blown, nailed or attached in other ways to walls, ceilings and floors of buildings. Assembly and installation of modular furniture/furniture systems. Free-standing furniture is not covered. This includes free standing: student chairs, study top desks, book box desks, computer furniture, dictionary stand, atlas stand, wood shelving, two-position information access station, file cabinets, storage cabinets, tables, etc.

☐ LABORER, CLEANING

• The clean up of any construction debris and the general (heavy/light) cleaning, including sweeping, wash down, mopping, wiping of the construction facility and its furniture, washing, polishing, and dusting.

☐ DELIVERY PERSONNEL

If delivery of supplies/building materials is to one common point and stockpiled there, prevailing wages are not required. If the delivery personnel are involved in the distribution of the material to multiple locations within the construction site, then they would have to be paid prevailing wages for the type of work performed: laborer, equipment operator, electrician, ironworker, plumber, etc.

An example of this would be where delivery of drywall is made to a building and the delivery personnel distribute the drywall from one "stockpile" location to further sub-locations on each floor. Distribution of material around a construction site is the job of a laborer or tradesman, and not a delivery personnel.

☐ ELECTRICIANS

Install, erect, maintenance, alteration or repair of any wire, cable, conduit, etc., which generates, transforms, transmits or uses electrical energy for light, heat, power or other purposes, including the Installation or maintenance of telecommunication, LAN wiring or computer equipment, and low voltage wiring. *License required per Connecticut General Statutes: E-1,2 L-5,6 C-5,6 T-1,2 L-1,2 V-1,2,7,8,9.

☐ ELEVATOR CONSTRUCTORS

Install, erect, maintenance and repair of all types of elevators, escalators, dumb waiters and moving walks. ***License required by Connecticut General Statutes: R-1, 2, 5, 6.**

☐ FORKLIFT OPERATOR

Laborers Group 4) Mason Tenders - operates forklift solely to assist a mason to a maximum height of nine (9) feet only.

Power Equipment Operator Group 9 - operates forklift to assist any trade, and to assist a mason to a height over nine (9) feet.

☐ GLAZIERS

Glazing wood and metal sash, doors, partitions, and 2 story aluminum storefronts. Installs glass windows, skylights, store fronts and display cases or surfaces such as building fronts, interior walls, ceilings and table tops and metal store fronts. Installation of aluminum window walls and curtain walls is the "joint" work of glaziers and ironworkers, which require equal composite workforce.

☐ IRONWORKERS

Erection, installation and placement of structural steel, precast concrete, miscellaneous iron, ornamental iron, metal curtain wall, rigging and reinforcing steel. Handling, sorting, and installation of reinforcing steel (rebar). Metal bridge rail (traffic), metal bridge handrail, and decorative security fence installation. Installation of aluminum window walls and curtain walls is the "joint" work of glaziers and ironworkers which require equal composite workforce.

☐ INSULATOR

Installing fire stopping systems/materials for "Penetration Firestop Systems": transit to cables, electrical conduits, insulated pipes, sprinkler pipe penetrations, ductwork behind radiation, electrical cable trays, fire rated pipe penetrations, natural polypropylene, HVAC ducts, plumbing bare metal, telephone and communication wires, and boiler room ceilings.

☐ LABORERS

Acetylene burners, asphalt rakers, chain saw operators, concrete and power buggy operator, concrete saw operator, fence and guard rail erector (except metal bridge rail (traffic), decorative security fence (non-metal).

installation.), hand operated concrete vibrator operator, mason tenders, pipelayers (installation of storm drainage or sewage lines on the street only), pneumatic drill operator, pneumatic gas and electric drill operator, powermen and wagon drill operator, air track operator, block paver, curb setters, blasters, concrete spreaders.

☐ PAINTERS

Maintenance, preparation, cleaning, blasting (water and sand, etc.), painting or application of

any protective coatings of every description on all bridges and appurtenances of highways, roadways, and railroads. Painting, decorating, hardwood finishing, paper hanging, sign writing, scenic artw o r k and drywall hhg for any and all types of building and residential work.

LEAD PAINT REMOVAL

Painter's Rate 1. Removal of lead paint from bridges. 2. Removal of lead paint as preparation of any surface to be repainted. 3. Where removal is on a Demolition project prior to reconstruction. • Laborer's Rate 1. Removal of lead paint from any surface NOT to be repainted. 2. Where removal is on a TOTAL Demolition project only.

PLUMBERS AND PIPEFITTERS

Installation, repair, replacement, alteration or maintenance of all plumbing, heating, cooling and piping. ***License required per Connecticut General Statutes: P-1,2,6,7,8,9 J1,2,3,4 SP-1,2 S- 1,2,3,4,5,6,7,8 B-1,2,3,4 D-1,2,3,4.**

POWER EQUIPMENT OPERATORS

Operates several types of power construction equipment such as compressors, pumps, hoists, derricks, cranes, shovels, tractors, scrapers or motor graders, etc. Repairs and maintains equipment.
***License required, crane operators only, per Connecticut General Statutes.**

ROOFERS

Covers roofs with composition shingles or sheets, wood shingles, slate or asphalt and gravel to waterproof roofs, including preparation of surface. (demolition or removal of any type of roofing and or clean-up of any and all areas where a roof is to be relaid.)

SHEETMETAL WORKERS

Fabricate, assembles, installs and repairs sheet metal products and equipment in such areas as ventilation, air-conditioning, warm air heating, restaurant equipment, architectural sheet metal work, sheet metal roofing, and aluminum gutters. Fabrication, handling, assembling, erecting, altering, repairing, etc. of coated metal material panels and composite metal material panels when used on building exteriors and interiors as soffits, facia, louvers, partitions, canopies, cornice, column covers, awnings, beam covers, cladding, sunshades, lighting troughs, spires, ornamental roofing, metal ceilings, mansards, copings, ornamental and ventilation hoods, vertical and horizontal siding panels, trim, etc. The sheet metal classification also applies to the vast variety of coated metal material panels and composite metal material panels that have evolved over the years as an alternative to conventional ferrous and non-ferrous metals like steel, iron, tin, copper, brass, bronze, aluminum, etc. Fabrication, handling, assembling, erecting, altering, repairing, etc. of architectural metal roof, standing seam roof, composite metal roof, metal and composite bathroom/toilet partitions, aluminum gutters, metal and

composite lockers and shelving, kitchen equipment, and walk-in coolers. To include testing and air –balancing ancillary to installation and construction.

- **SPRINKLER FITTERS**

Installation, alteration, maintenance and repair of fire protection sprinkler systems.
***License required per Connecticut General Statutes: F-1, 2, 3, 4.**

- **TILE MARBLE AND TERRAZZO FINISHERS**

Assists and tends the tile setter, marble mason and terrazzo worker in the performance of their duties.

- **TRUCK DRIVERS**

~How to pay truck drivers delivering asphalt is under REVISION~

Truck Drivers are required to be paid prevailing wage for time spent "working" directly on the site. These drivers remain covered by the prevailing wage for any time spent transporting between the actual construction location and facilities (such as fabrication, plants, mobile factories, batch plant, borrow pits, job headquarters, tool yards, etc.) dedicated exclusively, or nearly so, to performance of the contract or project, which are so located in proximity to the actual construction location that it is reasonable to include them. ***License required, drivers only, per Connecticut General Statutes**.
For example:

• Material men and deliverymen are not covered under prevailing wage as long as they are not directly involved in the construction process. If, they unload the material, they would then be covered by prevailing wage for the classification they are performing work in: laborer, equipment operator, etc.
• Hauling material off site is not covered provided they are not dumping it at a location outlined above.
• Driving a truck on site and moving equipment or materials on site would be considered covered work, as this is part of the construction process.

- Any questions regarding the proper classification should be directed to:

Public Contract Compliance Unit
Wage and Workplace Standards Division
Connecticut Department of Labor
200 Folly Brook Blvd, Wethersfield, CT 06109 (860) 263-6543.

Connecticut Department of Labor
Wage and Workplace Standards Division

FOOTNOTES

Please Note: If the "Benefits" listed on the schedule for the following occupations includes a letter(s) (+ a or + a+b for instance), refer to the information below.

Benefits to be paid at the appropriate prevailing wage rate for the listed occupation.

If the "Benefits" section for the occupation lists only a dollar amount, disregard the information below.

Bricklayers, Cement Masons, Cement Finishers, Concrete Finishers, Stone Masons
(Building Construction) and (Residential- Hartford, Middlesex, New Haven, New London and Tolland Counties)

a. Paid Holiday: Employees shall receive 4 hours for Christmas Eve holiday provided the employee works the regularly scheduled day before and after the holiday. Employers may schedule work on Christmas Eve and employees shall receive pay for actual hours worked in addition to holiday pay.

Elevator Constructors: Mechanics

a. Paid Holidays: New Year's Day, Memorial Day, Independence Day, Labor Day, Veterans' Day, Thanksgiving Day, Christmas Day, plus the Friday after Thanksgiving.

b. Vacation: Employer contributes 8% of basic hourly rate for 5 years or more of service or 6% of basic hourly rate for 6 months to 5 years of service as vacation pay credit.

Glaziers

a. Paid Holidays: Labor Day and Christmas Day.

Power Equipment Operators
(Heavy and Highway Construction & Building Construction)

a. Paid Holidays: New Year's Day, Good Friday, Memorial Day, Independence Day, Labor Day, Thanksgiving Day and Christmas Day, provided the employee works 3 days during the week in which the holiday falls, if scheduled, and if scheduled, the working day before and the working day after the holiday. Holidays falling on Saturday may be observed on Saturday, or if the employer so elects, on the preceding Friday.

Ironworkers

a. Paid Holiday: Labor Day provided employee has been on the payroll for

the 5 consecutive work days prior to Labor Day.

Laborers (Tunnel Construction)

a. Paid Holidays: New Year's Day, Memorial Day, Independence Day, Labor Day, Thanksgiving Day and Christmas Day. No employee shall be eligible for holiday pay when he fails, without cause, to work the regular work day preceding the holiday or the regular work day following the holiday.

Roofers

a. Paid Holidays: July 4th, Labor Day, and Christmas Day provided the employee is employed 15 days prior to the holiday.

Sprinkler Fitters

a. Paid Holidays: Memorial Day, July 4th, Labor Day, Thanksgiving Day and Christmas Day, provided the employee has been in the employment of a contractor 20 working days prior to any such paid holiday.

Truck Drivers

(Heavy and Highway Construction & Building Construction)

a. Paid Holidays: New Year's Day, Memorial Day, Independence Day, Labor Day, Thanksgiving Day, Christmas day, and Good Friday, provided the employee has at least 31 calendar days of service and works the last scheduled day before and the first scheduled day after the holiday, unless excused.

Rev. 7/1/19

SEE BELOW FOR STATE WAGE RATES

Minimum Rates and Classifications for
Heavy/Highway Construction

ID#: 25-8159

Connecticut Department of Labor
Wage and Workplace Standards Division

By virtue of the authority vested in the Labor Commissioner under provisions of Section 31-53 of the General Statutes of Connecticut, as amended, the following are declared to be the prevailing rates and welfare payments and will apply only where the contract is advertised for bid within 20 days of the date on which the rates are established. Any contractor or subcontractor not obligated by agreement to pay to the welfare and pension fund shall pay this amount to each employee as part of his/her hourly wages.

Project Number:
Project Town: Groton
State#: 9058-0015
FAP#:
Project: Replacement of Bridge No. 058015 Quaker Farm Road over Haleys Brook

CLASSIFICATION	Hourly Rate	Benefits
1) Boilermaker	48.21	30.01
1a) Bricklayer, Cement Masons, Cement Finishers, Plasterers, Stone Masons	43.14	34.74
2) Carpenters, Piledrivermen	42.03	29.19
2a) Diver Tenders	42.03	29.19
2b) Divers Effluent	67.52	29.19
3) Divers	50.49	29.19
03a) Millwrights	43.25	29.13
03b) Carpenter-Welder	42.53	29.19
03c) Carpenter: Working with creosote lumber or acid	43.03	29.19

As of: August 8, 2025

4) Painters: (Bridge Construction) Brush, Roller, Blasting (Sand, Water, etc.), Spray	59.7	26.65
4a) Painters: Brush and Roller	39.57	26.50
4b) Painters: Spray	42.57	26.50
4bc) Painters: Spray Helper	40.57	26.50
4c) Painters: Steel Only	41.57	26.50
4d) Painters: Blast	44.57	26.50
4de) Painter: Blast Helper	40.57	26.50
4e) Painters: Tanks, Tower and Swingstage etc.	41.57	26.50
4f) Elevated Tanks (60 feet and above)	48.57	26.50
5) Electrician (Trade License required: E-1,2 L-5,6 C-5,6 T-1,2 L-1,2 V-1,2,7,8,9)	46.4	36.66+3% of gross wage
6) Ironworkers: Ornamental, Reinforcing, Structural, and Precast Concrete Erection	45.25	43.62 + a
7) Plumbers (Trade License required: (P-1,2,6,7,8,9 J-1,2,3,4 SP-1,2) and Pipefitters (Including HVAC Work) (Trade License required: S-1,2,3,4,5,6,7,8 B-1,2,3,4 D-1,2,3,4 G-1, G-2, G-8, G-9)	50.58	36.30
----LABORERS---- -		
8) Group 1: General Laborers and concrete specialist	35.7	28.85

As of: August 8, 2025

8) Group 1a: Acetylene Burners (Hours worked with a torch)	36.7	28.85
9) Group 2: Chain saw operators, fence and guard rail erectors, pneumatic tool operators, powdermen	35.95	28.85
10) Group 3: Pipelayers	36.2	28.85
11) Group 4: Jackhammer/Pavement breaker (handheld); mason tenders (cement/concrete), catch basin builders, asphalt rakers, air track operators, block paver, curb setter and forklift operators	36.2	28.85
12) Group 5: Toxic waste removal (non-mechanical systems)	37.7	28.85
13) Group 6: Blasters	37.45	28.85
Group 7: Asbestos/lead removal, non-mechanical systems (does not include leaded joint pipe)	38.7	28.85
Group 8: Traffic control signalmen	21.42	28.85
Group 9: Hydraulic Drills	36.45	28.85
Group 10: Toxic Waste Removers A or B With PPE	38.7	28.85
----LABORERS (TUNNEL CONSTRUCTION, FREE AIR). Shield Drive and Liner Plate Tunnels in Free Air.----		
13a) Miners, Motormen, Mucking Machine Operators, Nozzle Men, Grout Men, Shaft & Tunnel Steel & Rodmen, Shield & Erector, Arm Operator, Cable Tenders	37.93	28.85 + a
13b) Brakemen, Trackmen, Miners' Helpers and all other men	36.96	28.85 + a

As of: August 8, 2025

----CLEANING, CONCRETE AND CAULKING TUNNEL----

14) Concrete Workers, Form Movers, and Strippers	36.96	28.85 + a
15) Form Erectors	37.29	28.85 + a

----ROCK SHAFT LINING, CONCRETE, LINING OF SAME AND TUNNEL IN FREE AIR:----

16) Brakemen, Trackmen, Tunnel Laborers, Shaft Laborers, Miners Helpers	36.96	28.85 + a
17) Laborers Topside, Cage Tenders, Bellman	36.85	28.85 + a
18) Miners	37.93	28.85 + a

----TUNNELS, CAISSON AND CYLINDER WORK IN COMPRESSED AIR: ----

18a) Blaster	44.42	28.85 + a
19) Brakemen, Trackmen, Groutman, Laborers, Outside Lock Tender, Gauge Tenders	44.22	28.85 + a
20) Change House Attendants, Powder Watchmen, Top on Iron Bolts	42.24	28.85 + a
21) Mucking Machine Operator, Grout Boss, Track Boss	45.01	28.85 + a

----TRUCK DRIVERS----(*see note below)

Block Truck	37.48	32.68 + a

As of: August 8, 2025

2 Axle	36.16	32.68 + a
Helpers	34.66	32.68 + a
Three Axle Trucks; Two Axle Mixer	36.27	32.68 + a
Three Axle Mixer	36.33	32.68 + a
Four Axle Trucks	36.39	32.68 + a
Four Axle Mixer	37.19	32.68 + a
5 Axle	36.39	32.68 + a
5 Axle Mixer	37.19	32.68 + a
Heavy Duty Trailer (40 tons and over)	38.66	32.68 + a
Heavy Duty Trailer (up to 40 tons)	37.39	32.68 + a
Snorkle Truck	36.54	32.68 + a
Swivel Dump and Tack Truck	36.39	32.68 + a
Euclids and Semi Trailer	36.44	32.68 + a

----POWER EQUIPMENT OPERATORS----

Group 1: Crane Handling or Erecting Structural Steel or Stone, Hoisting Engineer (2 drums or over). (Trade License Required)	58.19	29.80 + a
Group 1a: Front End Loader (7 cubic yards or over); Work Boat 26 ft. and over.	53.33	29.80 + a
Group 2: Cranes (100 ton rate capacity and over); Bauer Drill/Caisson. (Trade License Required)	57.78	29.80 + a
Group 2a: Cranes (under 100 ton rated capacity).	56.79	29.80 + a
Group 2b: Excavator over 2 cubic yards; Pile Driver ($3.00 premium when operator controls hammer).	52.92	29.80 + a
Group 3: Excavator; Gradall; Master Mechanic; Hoisting Engineer (all types of equipment where a drum and cable are used to hoist or drag material regardless of motive power of operation), Rubber Tire Excavator (Drott-1085 or similar);Grader Operator; Bulldozer Fine Grade (slopes, shaping, laser or GPS, etc.). (Trade License Required)	51.92	29.80 + a
Group 4: Trenching Machines; Lighter Derrick; CMI Machine or Similar; Koehring Loader (Skooper).	51.42	29.80 + a
Group 5: Specialty Railroad Equipment; Asphalt Paver; Asphalt Spreader; Asphalt Reclaiming Machine; Line Grinder; Concrete Pumps; Drills with Self Contained Power Units; Boring Machine; Post Hole Digger; Auger; Pounder; Well Digger; Milling Machine (over 24" mandrel)	50.63	29.80 + a
Group 5 continued: Side Boom; Combination Hoe and Loader; Directional Driller.	50.63	29.80 + a
Group 6: Front End Loader (3 up to 7 cubic yards); Bulldozer (rough grade dozer).	50.22	29.80 + a
Group 7: Asphalt Roller; Concrete Saws and Cutters (ride on types); Vermeer Concrete Cutter; Stump Grinder; Scraper; Snooper; Skidder; Milling Machine (24" and under Mandrel)	49.77	29.80 + a

As of: August 8, 2025

Group 8: Mechanic, Grease Truck Operator, Hydroblaster, Barrier Mover, Power Stone Spreader; Welder; Work Boat under 26 ft.; Transfer Machine.	49.25	29.80 + a
Group 9: Front End Loader (under 3 cubic yards), Skid Steer Loader regardless of attachments (Bobcat or Similar); Fork Lift, Power Chipper; Landscape Equipment (including hydroseeder), Vacuum Excavation Truck and Hydrovac Excavation Truck (27 HG pressure or greater).	48.67	29.80 + a
Group 10: Vibratory Hammer, Ice Machine, Diesel and Air Hammer, etc.	45.96	29.80 + a
Group 11: Conveyor, Earth Roller; Power Pavement Breaker (whiphammer), Robot Demolition Equipment.	45.96	29.80 + a
Group 12: Wellpoint Operator.	45.87	29.80 + a
Group 13: Compressor Battery Operator.	45.12	29.80 + a
Group 14: Elevator Operator; Tow Motor Operator (Solid Tire No Rough Terrain).	43.6	29.80 + a
Group 15: Generator Operator; Compressor Operator; Pump Operator; Welding Machine Operator; Heater Operator.	43.06	29.80 + a
Group 16: Maintenance Engineer.	42.2	29.80 + a
Group 17: Portable Asphalt Plant Operator; Portable Crusher Plant Operator; Portable Concrete Plant Operator., Portable Grout Plant Operator, Portable Water Filtration Plant Operator.	47.91	29.80 + a
Group 18: Power Safety Boat; Vacuum Truck; Zim Mixer; Sweeper; (minimum for any job requiring CDL license).	44.7	29.80 + a
Surveyor: Chief of Party	48.16	29.80 + a
Surveyor: Assistant Chief of Party	44.41	29.80 + a

As of: August 8, 2025

Surveyor: Instrument Man	42.73	29.80 + a
Surveyor: Rodman or Chairman	36.78	29.80 + a

**NOTE: SEE BELOW

----LINE CONSTRUCTION----(Railroad Construction and Maintenance)----

20) Lineman, Cable Splicer, Technician	57.6	32.85
21) Heavy Equipment Operator	51.84	29.95
22) Equipment Operator, Tractor Trailer Driver, Material Men	48.96	29.01
23) Driver Groundmen	43.2	26.84
23a) Groundman Experienced	31.68	13.91

----OUTSIDE LINE CONSTRUCTION----

24) Driver Groundmen	42.09	26.84
25) Groundmen	30.87	13.91
26) Heavy Equipment Operators	50.51	29.95
27) Linemen, Cable Splicers, Dynamite Men	56.12	32.85

As of: August 8, 2025

28) Material Men, Tractor Trailer Drivers, Equipment Operators	47.7	29.01
29) Technician	56.12	32.85
----COMMUNICATION----		
Sales & Service Technician: To include but not limited to: Installation, Repair, Splicing and Maintenance	48.84	18.07
----DREDGING----		
Class A1: Mechanical Dredge Operator	45.26	17.22+a+b
Class B1: Maintenance Engineer	39.14	16.78+a+b
Class C1: Mate/Welder	35.83	16.54+a+b
Class D: Deckhand	28.81	16.03+a+b

Welders: Rate for craft to which welding is incidental.
Surveyors: Hazardous material removal: $3.00 per hour premium.
*Note: Hazardous waste removal work receives additional $1.25 per hour for truck drivers.
**Note: Hazardous waste premium $3.00 per hour over classified rate.
Truck Drivers: Trainers Premium: $3.00 over wage rate.
Truck Drivers: Night Premium - Mixer Drivers: $2.00 over wage rate.

Crane with 150 ft. boom (including jib) - $1.50 extra
Crane with 200 ft. boom (including jib) - $2.50 extra
Crane with 250 ft. boom (including jib) - $5.00 extra
Crane with 300 ft. boom (including jib) - $7.00 extra
Crane with 400 ft. boom (including jib) - $10.00 extra

As of: August 8, 2025

All classifications that indicate a percentage of the fringe benefits must be calculated at the percentage rate times the "base hourly rate".

Apprentices duly registered under the Commissioner of Labor's regulations on "Work Training Standards for Apprenticeship and Training Programs" Section 31-51-d-1 to 12, are allowed to be paid the appropriate percentage of the prevailing journeymen hourly base and the full fringe benefit rate, providing the work site ratio shall not be less than one full-time journeyperson instructing and supervising the work of each apprentice in a specific trade.

~~Connecticut General Statute Section 31-55a: Annual Adjustments to wage rates by contractors doing state work ~~

The Prevailing wage rates applicable to this project are subject to annual adjustments each July 1st for the duration of the project.
Each contractor shall pay the annual adjusted prevailing wage rate that is in effect each July 1st, as posted by the Department of Labor.
It is the contractor's responsibility to obtain the annual adjusted prevailing wage rate increases directly from the Department of Labor's website.
The annual adjustments will be posted on the Department of Labor's Web page: www.ct.gov/dol. For those without internet access, please contact the division listed below.
The Department of Labor will continue to issue the initial prevailing wage rate schedule to the Contracting Agency for the project.
All subsequent annual adjustments will be posted on our Web Site for contractor access.
Contracting Agencies are under no obligation pursuant to State labor law to pay any increase due to the annual adjustment provision.

Effective October 1, 2005 - Public Act 05-50: any person performing the work of any mechanic, laborer, or worker shall be paid prevailing wage

All Person who perform work ON SITE must be paid prevailing wage for the appropriate mechanic, laborer, or worker classification.

All certified payrolls must list the hours worked and wages paid to All Persons who perform work ON SITE regardless of their ownership i.e.: (Owners, Corporate Officers, LLC Members, Independent Contractors, et. al)

Reporting and payment of wages is required regardless of any contractual relationship alleged to exist between the contractor and such person.

~~Unlisted classifications needed for work not included within the scope of the classifications listed may be added after award only as provided in the labor standards contract clause (29 CFR 5.5 (a) (1) (ii)).

Please direct any questions which you may have pertaining to classification of work and payment of prevailing wages to the Wage and Workplace Standards Division, telephone (860)263-6790.

As of: August 8, 2025

COMMISSION ON HUMAN RIGHTS AND OPPORTUNITIES
CONTRACT COMPLIANCE REGULATIONS
NOTIFICATION TO BIDDERS

(Revised 09/3/15)

The contract to be awarded is subject to contract compliance requirements mandated by Sections 4a-60 and 4a-60a of the Connecticut General Statutes; and, when the awarding agency is the State, Sections 46a-71(d) and 46a-81i(d) of the Connecticut General Statutes. There are Contract Compliance Regulations codified at Section 46a-68j-21 through 43 of the Regulations of Connecticut State Agencies, which establish a procedure for awarding all contracts covered by Sections 4a-60 and 46a-71(d) of the Connecticut General Statutes.

According to Section 46a-68j-30(9) of the Contract Compliance Regulations, every agency awarding a contract subject to the contract compliance requirements has an obligation to "aggressively solicit the participation of legitimate minority business enterprises as bidders, contractors, subcontractors and suppliers of materials." "Minority business enterprise" is defined in Section 4a-60 of the Connecticut General Statutes as a business wherein fifty-one percent or more of the capital stock, or assets belong to a person or persons: "(1) Who are active in daily affairs of the enterprise; (2) who have the power to direct the management and policies of the enterprise; and (3) who are members of a minority, as such term is defined in subsection (a) of Section 32-9n." "Minority" groups are defined in Section 32-9n of the Connecticut General Statutes as "(1) Black Americans . . . (2) Hispanic Americans . . . (3) persons who have origins in the Iberian Peninsula . . . (4)Women . . . (5) Asian Pacific Americans and Pacific Islanders; (6) American Indians . . ." An individual with a disability is also a minority business enterprise as provided by Section 4a-60g of the Connecticut General Statutes. The above definitions apply to the contract compliance requirements by virtue of Section 46a-68j-21(11) of the Contract Compliance Regulations.

The awarding agency will consider the following factors when reviewing the bidder's qualifications under the contract compliance requirements:

(a) the bidder's success in implementing an affirmative action plan;
(b) the bidder's success in developing an apprenticeship program complying with Sections 46a-68-1 to 46a-68-17 of the Administrative Regulations of Connecticut State Agencies, inclusive;
(c) the bidder's promise to develop and implement a successful affirmative action plan;
(d) the bidder's submission of employment statistics contained in the "Employment Information Form", indicating that the composition of its workforce is at or near parity when compared to the racial and sexual composition of the workforce in the relevant labor market area; and
(e) the bidder's promise to set aside a portion of the contract for legitimate minority business enterprises. See Section 46a-68j-30(10)(E) of the Contract Compliance Regulations.

INSTRUCTIONS AND OTHER INFORMATION

The following BIDDER CONTRACT COMPLIANCE MONITORING REPORT must be completed in full, signed, and submitted with the bid for this contract. The contract awarding agency and the Commission on Human Rights and Opportunities will use the information contained thereon to determine the bidders compliance to Sections 4a-60 and 4a-60a CONN. GEN. STAT., and Sections 46a-68j-23 of the Regulations of Connecticut State Agencies regarding equal employment opportunity, and the bidder's good faith efforts to include minority business enterprises as subcontractors and suppliers for the work of the contract.

1) Definition of Small Contractor

Section 4a-60g CONN. GEN. STAT. defines a small contractor as a company that has been doing business under the same management and control and has maintained its principal place of business in Connecticut for a one year period immediately prior to its application for certification under this section, had gross revenues not exceeding fifteen million dollars in the most recently completed fiscal year, and at least fifty-one percent of the ownership of which is held by a person or persons who are active in the daily affairs of the company, and have the power to direct the management and policies of the company, except that a nonprofit corporation shall be construed to be a small contractor if such nonprofit corporation meets the requirements of subparagraphs (A) and (B) of subdivision 4a-60g CONN. GEN. STAT.

2) Description of Job Categories (as used in Part IV Bidder Employment Information) (Page 2)

MANAGEMENT: Managers plan, organize, direct, and control the major functions of an organization through subordinates who are at the managerial or supervisory level. They make policy decisions and set objectives for the company or departments. They are not usually directly involved in production or providing services. Examples include top executives, public relations managers, managers of operations specialties (such as financial, human resources, or purchasing managers), and construction and engineering managers.

BUSINESS AND FINANCIAL OPERATIONS: These occupations include managers and professionals who work with the financial aspects of the business. These occupations include accountants and auditors, purchasing agents, management analysts, labor relations specialists, and budget, credit, and financial analysts.

MARKETING AND SALES: Occupations related to the act or process of buying and selling products and/or services such as sales engineer, retail sales workers and sales representatives including wholesale.

LEGAL OCCUPATIONS: In-House Counsel who is charged with providing legal advice and services in regards to legal issues that may arise during the course of standard business practices. This category also includes assistive legal occupations such as paralegals, legal assistants.

COMPUTER SPECIALISTS: Professionals responsible for the computer operations within a company are grouped in this category. Examples of job titles in this category include computer programmers, software engineers, database administrators, computer scientists, systems analysts, and computer support specialists

ARCHITECTURE AND ENGINEERING: Occupations related to architecture, surveying, engineering, and drafting are included in this category. Some of the job titles in this category include electrical and electronic engineers, surveyors, architects, drafters, mechanical engineers, materials engineers, mapping technicians, and civil engineers.

OFFICE AND ADMINISTRATIVE SUPPORT: All clerical-type work is included in this category. These jobs involve the preparing, transcribing, and preserving o f written communications and records; collecting accounts; gathering and distributing information; operating office machines and electronic data processing equipment; and distributing mail. Job titles listed in this category include telephone operators, bill and account collectors, customer service representatives, dispatchers, secretaries and administrative assistants, computer operators and clerks (such as payroll, shipping, stock, mail and file).

BUILDING AND GROUNDS CLEANING AND MAINTENANCE: This category includes occupations involving landscaping, housekeeping, and janitorial services. Job titles found in this category include supervisors of landscaping or housekeeping, janitors, maids, grounds maintenance workers, and pest control workers.

CONSTRUCTION AND EXTRACTION: This category includes construction trades and related occupations. Job titles found in this category include boilermakers, masons (all types), carpenters, construction laborers, electricians, plumbers (and related trades), roofers, sheet metal workers, elevator installers, hazardous materials removal workers, paperhangers, and painters. Paving, surfacing, and tamping equipment operators; drywall and ceiling tile installers; and carpet, floor and tile installers and finishers are also included in this category. First line supervisors, foremen, and helpers in these trades are also grouped in this category.

INSTALLATION, MAINTENANCE AND REPAIR: Occupations involving the installation, maintenance, and repair of equipment are included in this group. Examples of job titles found here are heating, ac, and refrigeration mechanics and installers; telecommunication line installers and repairers; heavy vehicle and mobile equipment service technicians and mechanics; small engine mechanics; security and fire alarm systems installers; electric/electronic repair, industrial, utility and transportation equipment; millwrights; riggers; and manufactured building and mobile home installers. First line supervisors, foremen, and helpers for these jobs are also included in the category.

MATERIAL MOVING WORKERS: The job titles included in this group are Crane and tower operators; dredge, excavating, and lading machine operators; hoist and winch operators; industrial truck and tractor operators; cleaners of vehicles and equipment; laborers and freight, stock, and material movers, hand; machine feeders and offbearers; packers and packagers, hand; pumping station operators; refuse and recyclable material collectors; and miscellaneous material moving workers.

PRODUCTION WORKERS: The job titles included in this category are chemical production machine setters, operators and tenders; crushing/grinding workers; cutting workers; inspectors, testers sorters, samplers, weighers; precious stone/metal workers; painting workers; cementing/gluing machine operators and tenders; etchers/engravers; molders, shapers and casters except for metal and plastic; and production workers.

3) Definition of Racial and Ethnic Terms (as used in Part IV Bidder Employment Information) (Page 3)

White (not of Hispanic Origin)-All persons having origins in any of the original peoples of Europe, North Africa, or the Middle East. Black (not of Hispanic Origin)-All persons having origins in any of the Black racial groups of Africa. Hispanic- All persons of Mexican, Puerto Rican, Cuban, Central or South American, or other Spanish culture or origin, regardless of race.	Asian or Pacific Islander- All persons having origins in any of the original peoples of the Far East, Southeast Asia, the Indian subcontinent, or the Pacific Islands. This area includes China, India, Japan, Korea, the Philippine Islands, and Samoa. American Indian or Alaskan Native- All persons having origins in any of the original peoples of North America, and who maintain cultural identification through tribal affiliation or community recognition.

BIDDER CONTRACT COMPLIANCE MONITORING REPORT

PART 1 – Bidder Information

Company Name: Street Address: City & State: Chief Executive:	Bidder Federal Employer Identification Number: Or Social Security Number:
Major Business Activity: (brief description)	Bidder Identification (response optional/definitions on page 1) -Bidder is a small contractor? Yes No -Bidder is a minority business enterprise? Yes No (If yes, check ownership category) Black Hispanic Asian American American Indian/Alaskan Native Iberian Peninsula Individual(s) with a Physical Disability Female -Bidder is certified as above by State of CT? Yes No
Bidder Parent Company: (If any)	
Other Locations in CT: (If any)	

PART II - Bidder Nondiscrimination Policies and Procedures

1. Does your company have a written Affirmative Action/Equal Employment Opportunity statement posted on company bulletin boards? Yes No	7. Do all of your company contracts and purchase orders contain non-discrimination statements as required by Sections 4a-60 & 4a-60a Conn. Gen. Stat.? Yes No
2. Does your company have the state-mandated sexual harassment prevention in the workplace policy posted on company bulletin boards? Yes No	8. Do you, upon request, provide reasonable accommodation to employees, or applicants for employment, who have physical or mental disability? Yes No
3. Do you notify all recruitment sources in writing of your company's Affirmative Action/Equal Employment Opportunity employment policy? Yes No	9. Does your company have a mandatory retirement age for all employees? Yes No
4. Do your company advertisements contain a written statement that you are an Affirmative Action/Equal Opportunity Employer? Yes No	10. If your company has 50 or more employees, have you provided at least two (2) hours of sexual harassment training to all of your supervisors? Yes No N/A
5. Do you notify the Ct. State Employment Service of all employment openings with your company? Yes No	11. If your company has apprenticeship programs, do they meet the Affirmative Action/Equal Employment Opportunity requirements of the apprenticeship standards of the Ct. Dept. of Labor? Yes No N/A
6. Does your company have a collective bargaining agreement with workers? Yes No 6a. If yes, do the collective bargaining agreements contain non-discrimination clauses covering all workers? Yes No 6b. Have you notified each union in writing of your commitments under the nondiscrimination requirements of contracts with the state of CT? Yes No	12. Does your company have a written affirmative action Plan? Yes No If no, please explain. 13. Is there a person in your company who is responsible for equal employment opportunity? Yes No If yes, give name and phone number:

Part III - Bidder Subcontracting Practices

1. Will the work of this contract include subcontractors or suppliers? Yes ☐ No ☐

1a. If yes, please list all subcontractors and suppliers and report if they are a small contractor and/or a minority business enterprise. (defined on page 1 / use additional sheet if necessary)

1b. Will the work of this contract require additional subcontractors or suppliers other than those identified in 1a. above? Yes ☐ No ☐

PART IV - Bidder Employment Information

Date:

JOB CATEGORY *	OVERALL TOTALS	WHITE (not of Hispanic origin)		BLACK (not of Hispanic origin)		HISPANIC		ASIAN or PACIFIC ISLANDER		AMERICAN INDIAN or ALASKAN NATIVE	
		Male	Female	Male	Female	Male	Female	Male	Female	Male	Female
Management											
Business & Financial Ops											
Marketing & Sales											
Legal Occupations											
Computer Specialists											
Architecture/Engineering											
Office & Admin Support											
Bldg/ Grounds Cleaning/Maintenance											
Construction & Extraction											
Installation , Maintenance & Repair											
Material Moving Workers											
Production Occupations											
TOTALS ABOVE											
Total One Year Ago											
FORMAL ON THE JOB TRAINEES (ENTER FIGURES FOR THE SAME CATEGORIES AS ARE SHOWN ABOVE)											
Apprentices											
Trainees											

*NOTE: JOB CATEGORIES CAN BE CHANGED OR ADDED TO (EX. SALES CAN BE ADDED OR REPLACE A CATEGORY NOT USED IN YOUR COMPANY)

1. Which of the following recruitment sources are used by you? (Check yes or no, and report percent used)				2. Check (X) any of the below listed requirements that you use as a hiring qualification (X)		3. Describe below any other practices or actions that you take which show that you hire, train, and promote employees without discrimination
SOURCE	YES	NO	% of applicants provided by source			
State Employment Service	☐	☐			Work Experience	
Private Employment Agencies	☐	☐			Ability to Speak or Write English	
Schools and Colleges	☐	☐			Written Tests	
Newspaper Advertisement	☐	☐			High School Diploma	
Walk Ins	☐	☐			College Degree	
Present Employees	☐	☐			Union Membership	
Labor Organizations	☐	☐			Personal Recommendation	
Minority/Community Organizations	☐	☐			Height or Weight	
Others (please identify)	☐	☐			Car Ownership	
	☐	☐			Arrest Record	
	☐	☐			Wage Garnishments	

Certification (Read this form and check your statements on it CAREFULLY before signing). I certify that the statements made by me on this BIDDER CONTRACT COMPLIANCE MONITORING REPORT are complete and true to the best of my knowledge and belief, and are made in good faith. I understand that if I knowingly make any misstatements of facts, I am subject to be declared in non-compliance with Section 4a-60, 4a-60a, and related sections of the CONN. GEN. STAT.

(Signature)	(Title)	(Date Signed)	(Telephone)

STATE OF CONNECTICUT
COMMISSION ON HUMAN RIGHTS AND OPPORTUNITIES

NOTICE CONCERNING CONTRACT COMPLIANCE RESPONSIBILITIES

TO ALL LABOR UNIONS, WORKERS REPRESENTATIVES AND VENDORS:

Any contract this contractor has with the State of Connecticut or political subdivisions of the state, other than municipalities, shall be performed in accordance with CONN. GEN. STAT. Section 4a-60 and Section 4a-60a.

This means that this contractor:

1. Agrees to provide the Commission on Human Rights and Opportunities (CHRO) with any information concerning this contractor's employment practices and procedures which relates to the Commission's responsibilities under CONN. GEN. STAT. Sections 4a-60 or 46a-56 or Section 4a-60a.; and

2. Agrees to include the provisions of CONN. GEN. STAT. Section 46a-60(a) and Section 4a-60a in each and every subcontract and purchase order and to take whatever action the CHRO deems necessary to enforce these provisions.

WITH REGARD TO RACE, COLOR, RELIGIOUS CREED, AGE, MARITAL STATUS, NATIONAL ORIGIN, ANCESTRY, SEX, MENTAL RETARDATION OR PHYSICAL DISABILITY, this means that this contractor:

1. Shall not discriminate or permit discrimination against anyone;

2. Shall take affirmative action so that persons applying for employment are hired on the basis of job-related qualifications and that employees once hired are treated without regard to their race, color, religious creed, age, marital status, national origin, ancestry, sex, mental retardation or physical disability, unless the contractor can show that the disability prevents performance of the work involved;

3. Shall state in all advertisements for employees that it is an affirmative action-equal opportunity employer;

4. Shall comply with CONN. GEN. STAT. Sections 4a-60, 46a-68e and 46a-68f and with each regulation or relevant order issued by the CHRO under CONN. GEN. STAT. Sections 46a-56, 46a-68e and
46a-68f; and

5. Shall make, if the contract is a public works contract, good faith efforts to employ minority business enterprises as subcontractors and suppliers of materials.

WITH REGARD TO SEXUAL ORIENTATION, GENDER IDENTITY OR EXPRESSION:

1. The contractor will not discriminate or permit discrimination against anyone, and employees will be treated without regard to their sexual orientation, gender identity or expression once employed; and

2. The contractor agrees to fully comply with Section 4a-60a and each regulation or relevant order issued by the CHRO under CONN. GEN. STAT. Section 46a-56.

Persons having questions about this notice or their rights under the law are urged to contact the:

COMMISSION ON HUMAN RIGHTS AND OPPORTUNITIES
AFFIRMATIVE ACTION AND CONTRACT COMPLIANCE
UNIT

450 Columbus Boulevard, Suite 2
Hartford, CT 06103
(860) 541-4709

COPIES OF THIS NOTICE SHALL BE POSTED IN CONSPICUOUS PLACES AVAILABLE TO ALL EMPLOYEES AND APPLICANTS FOR EMPLOYMENT