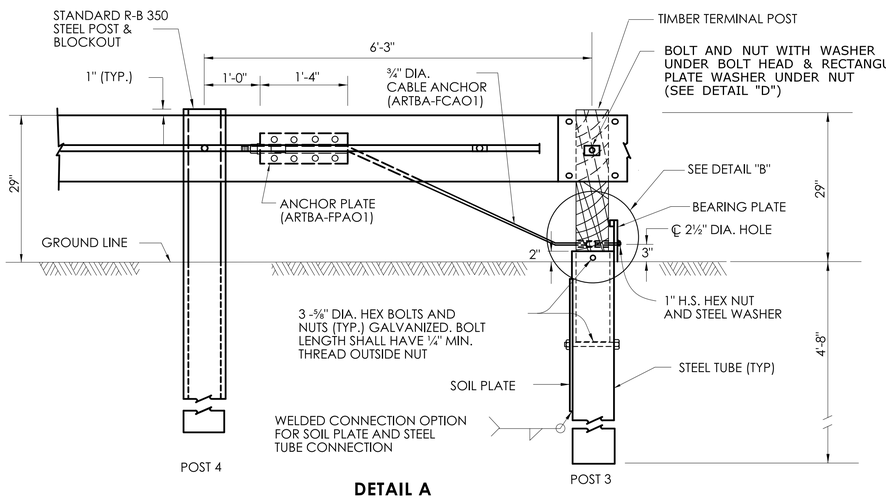

DETAIL A

CABLE ANCHORAGE ASSEMBLY

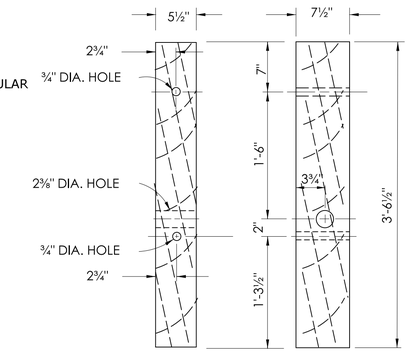

DETAIL C

TIMBER TERMINAL POST

(ARTBA-PDFO1)

(SEE NOTE 2)

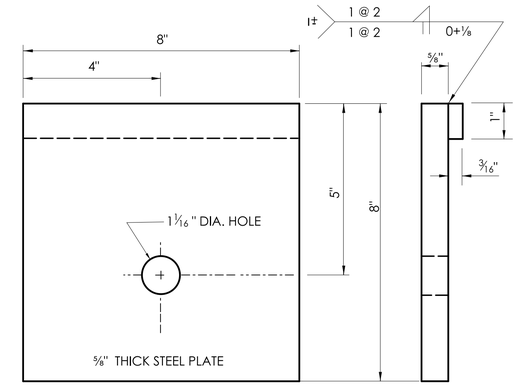

BEARING PLATE

(ARTBA-FPBO1)

GENERAL NOTES:

1. APPROACH END R-B TERMINAL SECTION SHALL ONLY BE USED ON LOW SPEED (<45 MPH) ROADWAYS.
2. POSTS 1, 2 AND 3 ARE TIMBER TERMINAL POSTS (DETAIL "C") WITH STEEL TUBES. POSTS 4 AND 5 ARE STANDARD R-B 350 STEEL POSTS WITH BLOCKOUTS.
3. REFER TO CTDOT STANDARD SPECIFICATIONS FOR MATERIAL AND GENERAL CONSTRUCTION METHODS.
4. MINIMUM RAIL HEIGHT FOR NEW CONSTRUCTION SHALL BE 29" +/- 1".

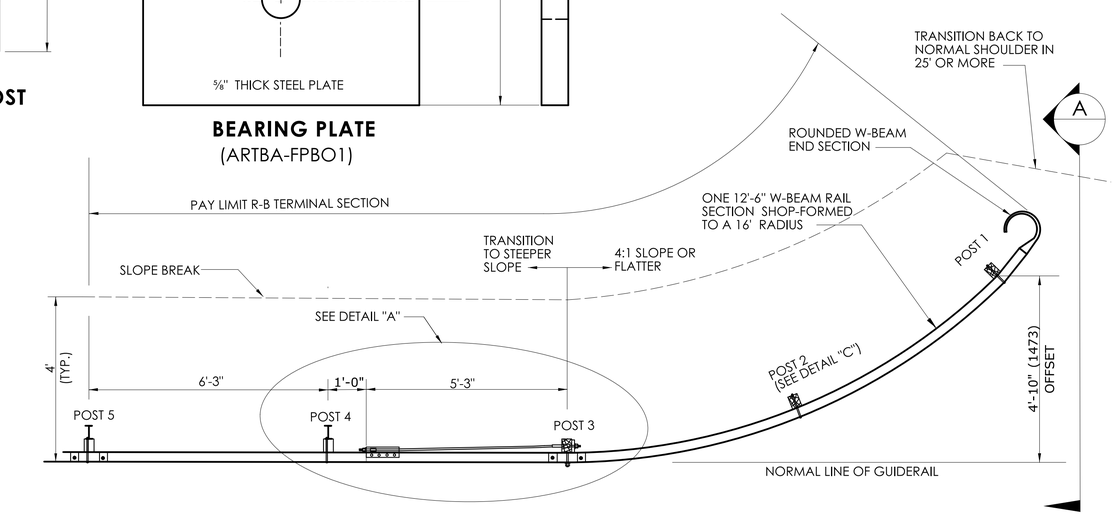

APPROACH END
(TRAILING END NOT SHOWN)

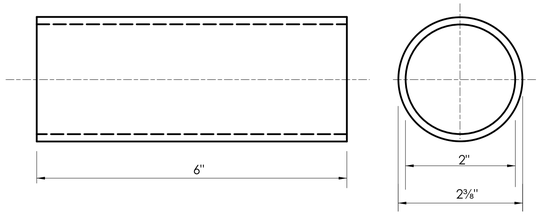

BREAKAWAY TERMINAL POST SLEEVE

(ARTBA-FMMO2)

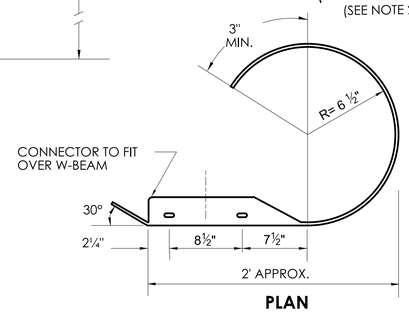

PLAN

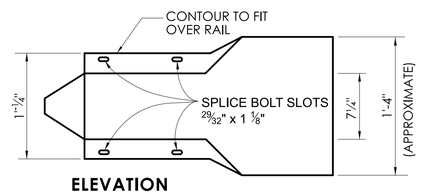

ELEVATION

ROUNDED W-BEAM END SECTION

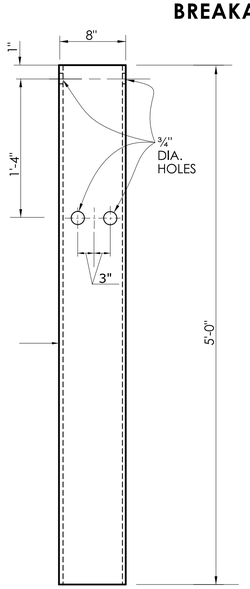

STEEL TUBE

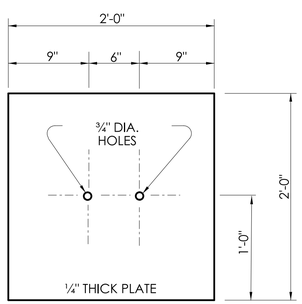

SOIL PLATE

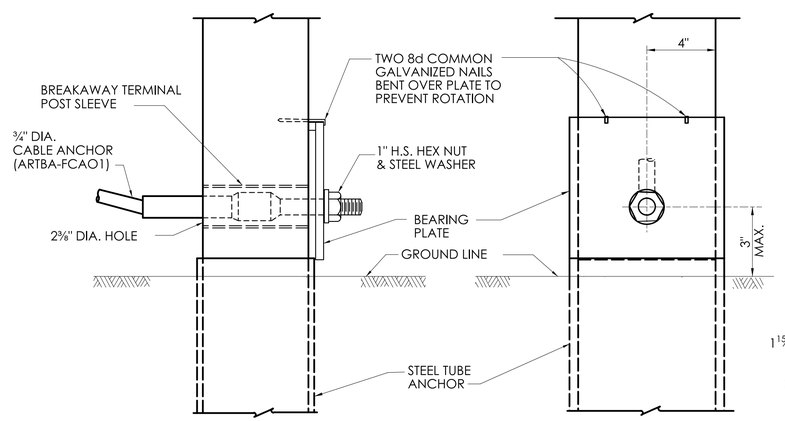

DETAIL B

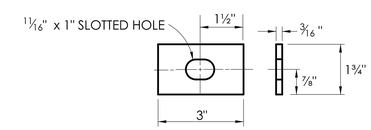

DETAIL D

RECTANGULAR PLATE WASHER

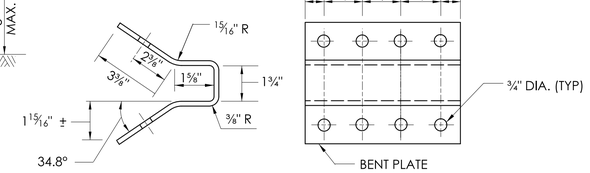

ANCHOR PLATE

(ARTBA-FPAO1)

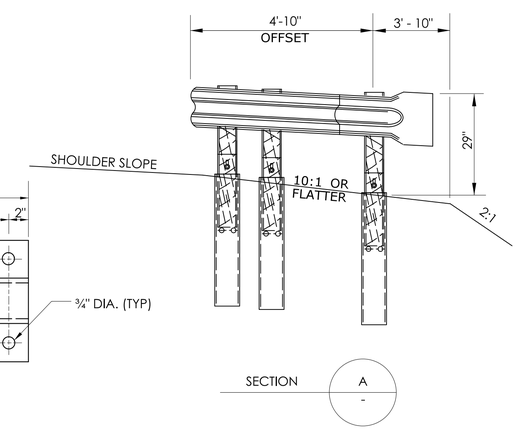

	NOT TO SCALE	SIGNATURE BLOCK: OFFICE OF ENGINEERING 2800 BERLIN TURNPIKE NEWINGTON, CT 06111	SUBMITTED BY: Digitally signed by Leo Fontaine, P.E. Date: 2024.12.19 15:00:10-05'00'	APPROVED BY: Digitally signed by Michael N. Calabrese, P.E. Date: 2025.01.29 12:25:22-05'00'	CTDOT CONNECTICUT DEPARTMENT OF TRANSPORTATION	CTDOT STANDARD SHEET	STANDARD SHEET TITLE: R-B TERMINAL SECTION	STANDARD SHEET NO.: HW-910_17

PLOTTED DATE: 10/23/2024