GENERAL NOTE:

1. THE LENGTH OF THE ANTI-TRACKING PAD SHALL BE INCREASED AS DIRECTED FOR SITES COMPOSED OF CLAY OR SILTS.

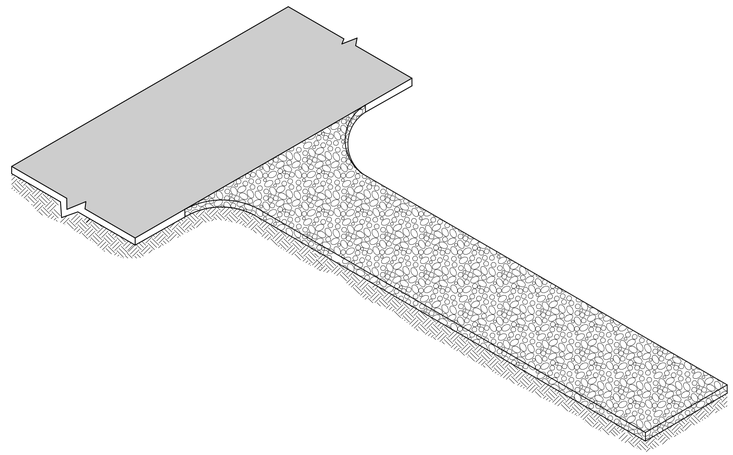

ANTI-TRACKING PAD

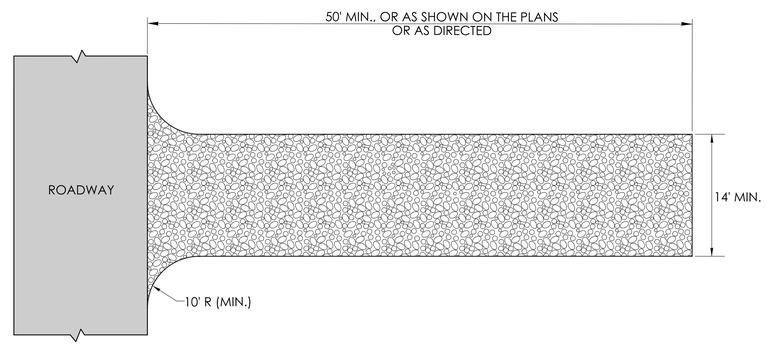

PLAN

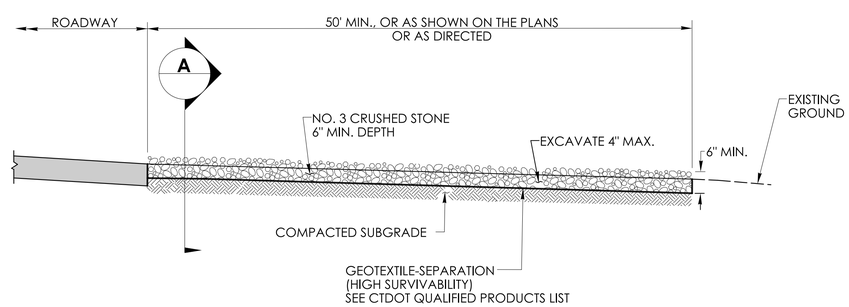

ELEVATION

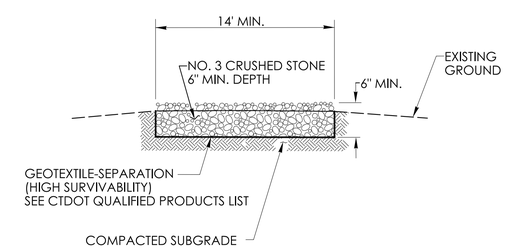

SECTION A

	NOT TO SCALE	SIGNATURE BLOCK: OFFICE OF ENGINEERING 2800 BERLIN TURNPIKE NEWINGTON, CT 06111	SUBMITTED BY: Digitally signed by Leo Fontaine, P.E. Date: 2024.12.16 10:14:01-05'00'	APPROVED BY: Digitally signed by Michael N. Calabrese, P.E. Date: 2025.01.21 12:24:22-05'00'	CTDOT CONNECTICUT DEPARTMENT OF TRANSPORTATION	CTDOT STANDARD SHEET	STANDARD SHEET TITLE: ANTI-TRACKING PAD	STANDARD SHEET NO.: HW-211_01

PLOTTED DATE: 10/22/2024