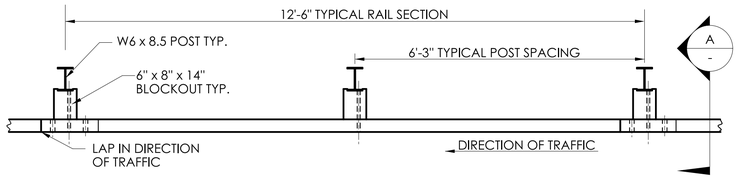

PLAN

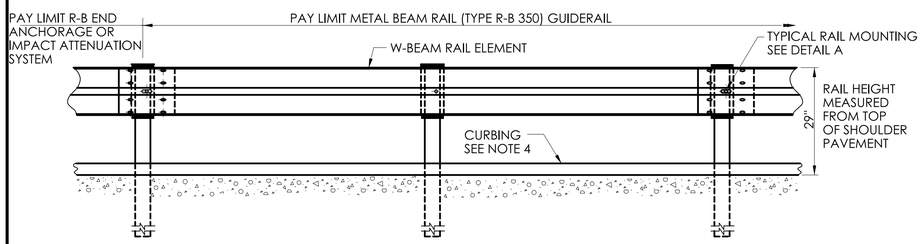

ELEVATION

METAL BEAM RAIL (TYPE R-B 350)

CONDITION 1 :

IF SOIL DEPTH IS ≤ 18" DEEP (A) DRILL 20" DIA. HOLE 24" INTO LEDGE. (B)

CONDITION 2 :

IF SOIL DEPTH IS > 18" DEEP (A) DRILL 8" DIA. HOLE 1' INTO LEDGE (B) OR TO THE DEPTH OF FULL EMBEDMENT OF 42⅛" WHICHEVER IS LESS.

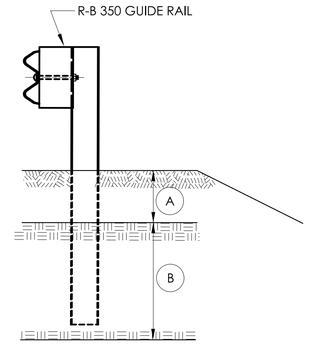

ELEVATION
(SEE NOTE 8)

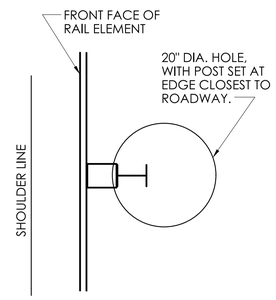

PLAN
CONDITION 1
(SEE NOTE 8)

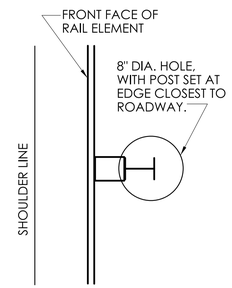

PLAN
CONDITION 2
(SEE NOTE 8)

DRILLING IN ROCK FOR GUIDERAIL POSTS

GENERAL NOTES:

1. SEE SHEET HW-910_01 FOR HARDWARE AND DELINEATOR DETAILS.
2. MAXIMUM DESIGN DEFLECTION FOR R-B 350 GUIDERAIL AT THE STANDARD POST SPACING OF 6'-3" IS 4'-3". DEFLECTION REQUIREMENT IS MEASURED FROM THE BACK OF POST TO THE FACE OF OBJECT.
3. FOR CURVES WITH RADII OF 150' OR LESS, ALL RAIL ELEMENTS SHALL BE SHOP FABRICATED TO THE PROPER RADIUS AND GALVANIZED AFTER FABRICATION. RADIUS RAIL WHEN REQUIRED AND NOTED ON THE PLANS, IS INCLUDED IN THE PAY ITEM FOR GUIDERAIL.
4. RAIL HEIGHT WITH CURBING SHALL BE MEASURED FROM THE TOP OF PAVEMENT. ON HIGH SPEED ROADWAYS (>45mph), 4" CURBING MAY BE USED IN CONJUNCTION WITH GUIDERAIL AND THE RAIL ELEMENT SHALL BE PLACED FLUSH WITH THE FACE OF CURB. ON LOW SPEED ROADWAYS (<45mph) , 6" CURBING MAY BE USED IN CONJUNCTION WITH GUIDERAIL AND THE RAIL ELEMENT SHALL BE PLACED A MAXIMUM OF 9" BEHIND THE FACE OF CURB.
5. THREE BLOCKOUTS MAY BE USED FOR ONE POST ONLY. TWO BLOCKOUTS MAY BE USED FOR A SERIES OF POSTS. THE COST OF ADDITIONAL BLOCKOUTS AND LONGER BOLTS SHALL BE INCLUDED IN THE BID PRICE PER FOOT OF GUIDERAIL. EXTRA BLOCKOUTS AT TRANSITION TO BRIDGE PARAPETS SHOULD BE AVOIDED.
6. W-BEAM GUIDERAIL MAY BE PLACED 1' OR MORE FROM THE EDGE OF PAVEMENT ONLY ON SLOPES 10:1 OR FLATTER AND WITHOUT CURBING. IF THE RAIL IS INSTALLED WITHIN 2' OF THE EDGE OF PAVEMENT, THE RAIL HEIGHT IS MEASURED FROM THE SHOULDER SLOPE EXTENDED TO THE RAIL. IF THE RAIL IS INSTALLED BEYOND 2' FROM THE EDGE OF PAVEMENT, THE RAIL HEIGHT IS MEASURED FROM THE GROUND DIRECTLY BELOW THE RAIL.
7. ALL R-B 350 GUIDERAIL TYPES INSTALLED ON EXPRESSWAYS AND RAMPS SHALL USE CLASS B, TYPE-II (10 GAUGE) W-BEAM RAIL ELEMENTS.
8. 20" DIA. EXCAVATED HOLE SHALL BE BACKFILLED WITH SUITABLE MATERIAL, OR GRANULAR FILL COMPACTED IN 6" LIFTS BEFORE DRIVING POST OR POSTS MAY BE SET IN EXCAVATED HOLE AND BACKFILLED WITH CONTROLLED LOW STRENGTH MATERIAL (CLSM). 8" DIA. HOLE SHALL BE BACKFILLED WITH SUITABLE MATERIAL.
9. AS DIRECTED BY THE ENGINEER AND WHERE PAVEMENT FOR RAILING IS NOT BEING INSTALLED, A MIN. 6" DEPTH OF PROCESSED AGGREGATE SHALL BE INSTALLED FROM THE PAVEMENT EDGE OR BACK OF CURB TO A MINIMUM OF 2' BEHIND THE GUIDERAIL POST AND COMPACTED IN 6" LIFTS.
10. MINIMUM RAIL HEIGHT FOR NEW CONSTRUCTION SHALL BE 29" ± 1".

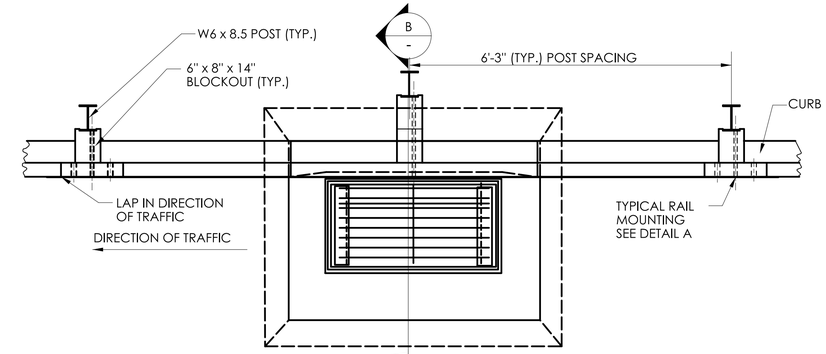

PLAN

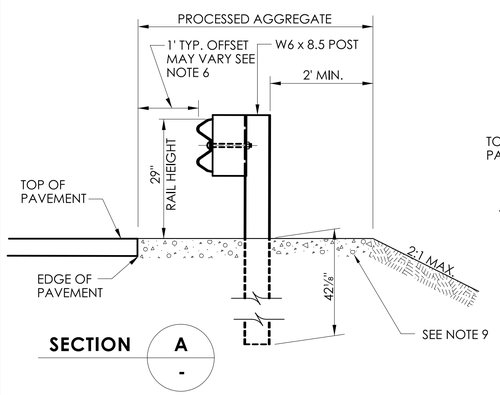

SECTION A -

NO CURB APPLICATION

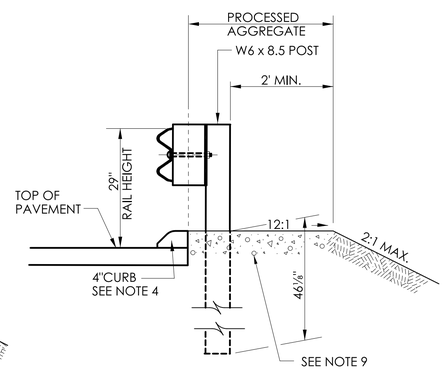

SECTION A -

CURB APPLICATION

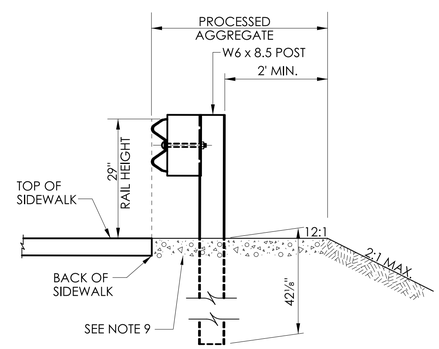

SECTION A -

SIDEWALK APPLICATION

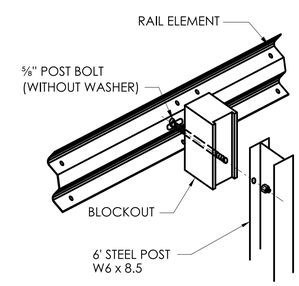

DETAIL A
RAIL MOUNTING

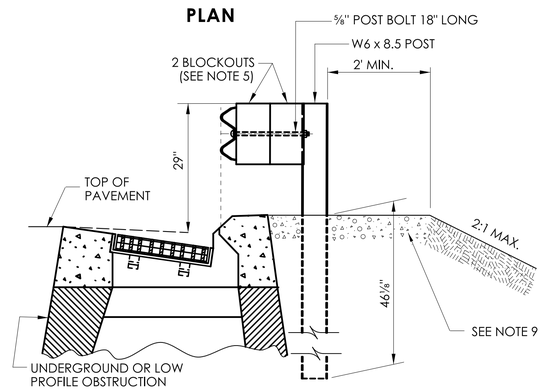

SECTION B -

MULTIPLE BLOCKOUT APPLICATION (MAY BE USED TO AVOID UNDERGROUND OR LOW PROFILE OBSTRUCTION)

	NOT TO SCALE	SIGNATURE BLOCK: OFFICE OF ENGINEERING 2800 BERLIN TURNPIKE NEWINGTON, CT 06111	SUBMITTED BY: Digitally signed by Leo Fontaine, P.E. Date: 2024.12.16 14:18:32-05'00'	APPROVED BY: Digitally signed by Michael N. Calabrese, P.E. Date: 2025.01.21 13:48:55-05'00'	CTDOT CONNECTICUT DEPARTMENT OF TRANSPORTATION	CTDOT STANDARD SHEET	STANDARD SHEET TITLE: METAL BEAM RAIL (TYPE R-B 350) GUIDERAIL	STANDARD SHEET NO.: HW-910_02

PLOTTED DATE: 10/22/2024