GENERAL NOTES:

1. SEE CHARTS ON HW-505_01a FOR REINFORCING BARS.
2. ALL THE HORIZONTAL BARS SHOWN ARE NO. 4 BARS AND ALL THE VERTICAL BARS SHOWN ARE NO. 4 BENT BARS.
3. ALL BARS SHALL HAVE A 3" MIN. COVER AND ALSO STOP 3" FROM THE PIPE OPENING AND HAVE 12" MAX. SPACING.
4. PROVIDE A 1" CHAMFER ON ALL EXPOSED EDGES OR AS SHOWN.
5. THE LENGTH AND QUANTITY OF NO. 4 BARS - SHORT (NOMINAL LENGTH) VARY FOR EACH WALL SIZE. THESE BARS ARE SHOWN FOR REFERENCE ONLY.

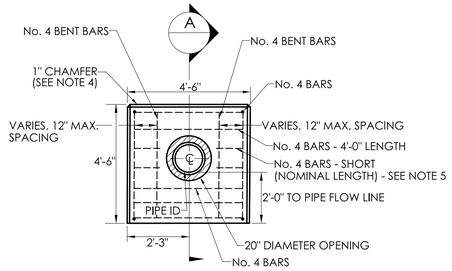

FRONT ELEVATION (FOR 12" RCP)

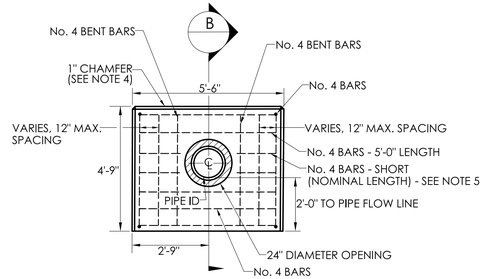

FRONT ELEVATION (FOR 15" RCP)

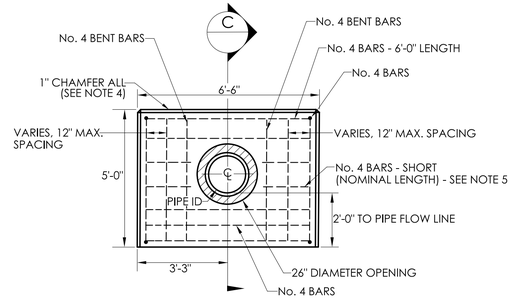

FRONT ELEVATION (FOR 18" RCP)

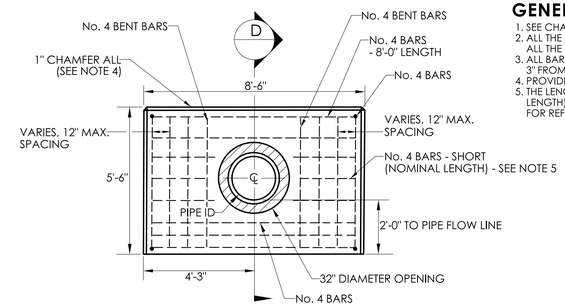

FRONT ELEVATION (FOR 24" RCP)

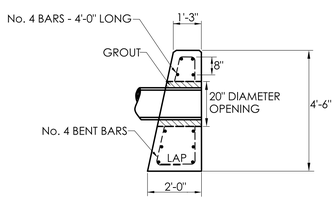

SECTION A (FOR 12" RCP)

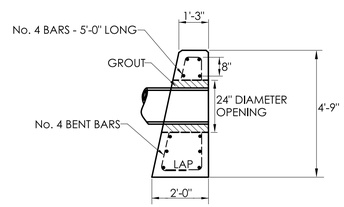

SECTION B (FOR 15" RCP)

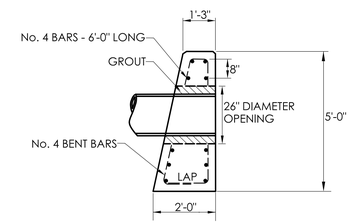

SECTION C (FOR 18" RCP)

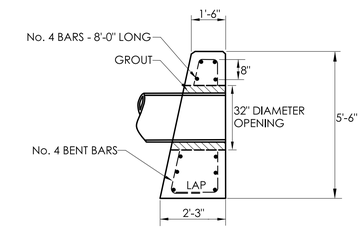

SECTION D (FOR 24" RCP)

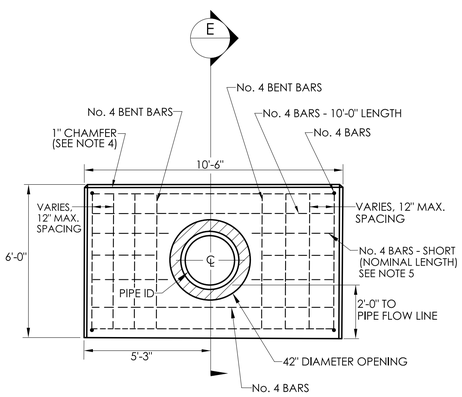

FRONT ELEVATION (FOR 30" RCP)

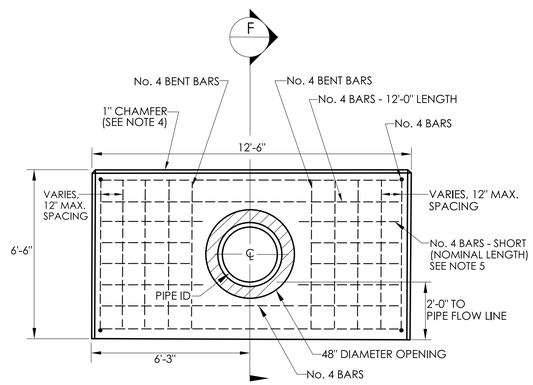

FRONT ELEVATION (FOR 36" RCP)

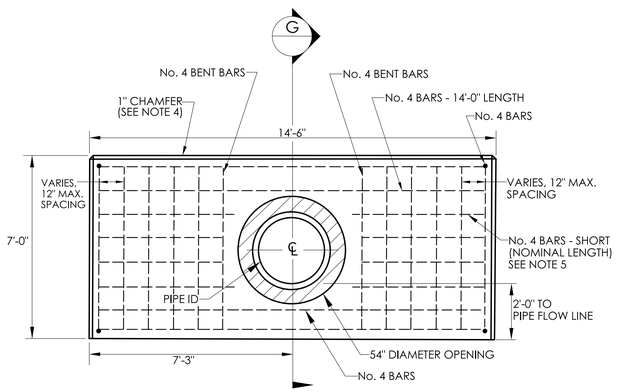

FRONT ELEVATION (FOR 42" RCP)

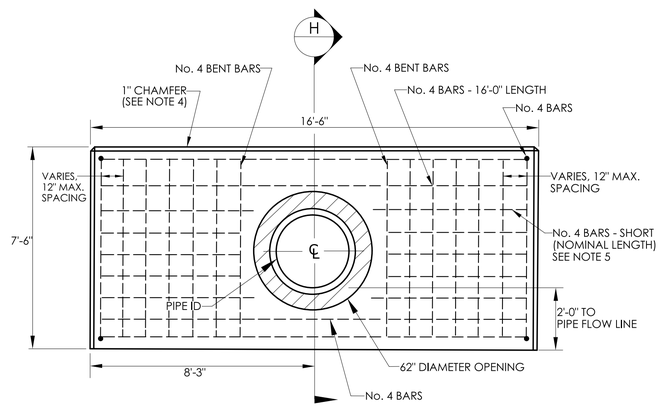

FRONT ELEVATION (FOR 48" RCP)

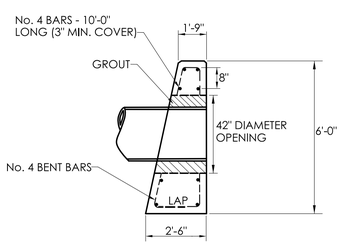

SECTION E (FOR 30" RCP)

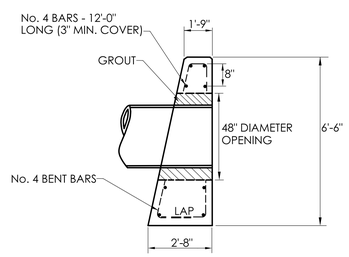

SECTION F (FOR 36" RCP)

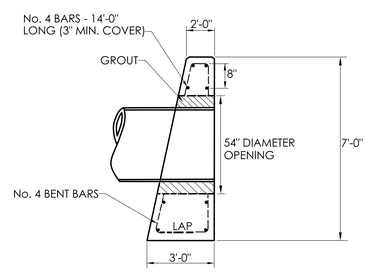

SECTION G (FOR 42" RCP)

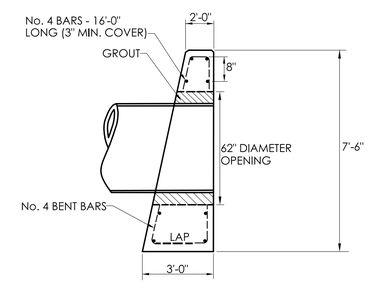

SECTION H (FOR 48" RCP)

	NOT TO SCALE	SIGNATURE BLOCK: OFFICE OF ENGINEERING 2800 BERLIN TURNPIKE NEWINGTON, CT 06111	SUBMITTED BY: Digitally signed by Leo Fontaine, P.E. Date: 2024.12.16 10:11:02-05'00'	APPROVED BY: Digitally signed by Michael N. Calabrese, P.E. Date: 2025.01.21 12:31:55-05'00'	CTDOT CONNECTICUT DEPARTMENT OF TRANSPORTATION	CTDOT STANDARD SHEET	STANDARD SHEET TITLE: STEEL REINFORCING FOR STRAIGHT ENDWALLS (FOR 2'-0" DIFFERENCE FROM BASE TO FLOW LINE)	STANDARD SHEET NO.: HW-505_01b

PLOTTED DATE: 10/22/2024