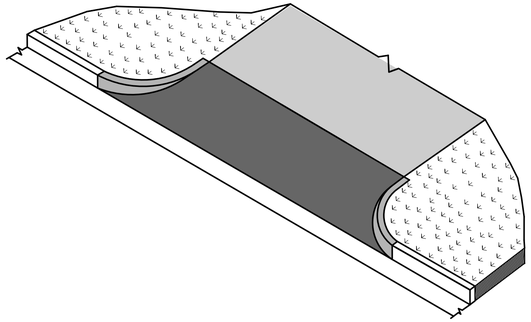

CONCRETE DRIVEWAY RAMP

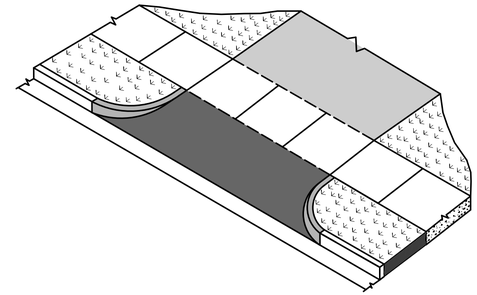

CONCRETE DRIVEWAY RAMP
WITH A PEDESTRIAN SIDEWALK SETBACK

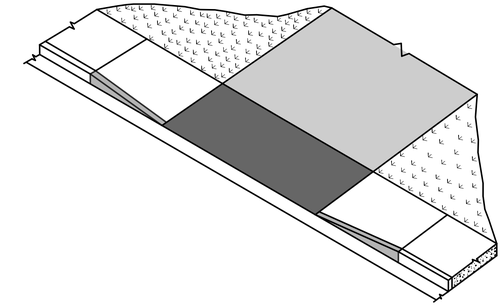

CONCRETE DRIVEWAY RAMP
WITH PEDESTRIAN SIDEWALK AT THE CURB

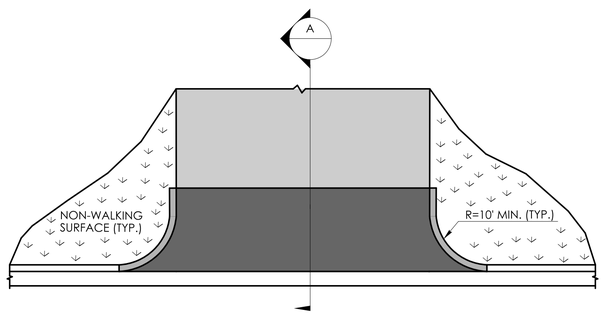

PLAN

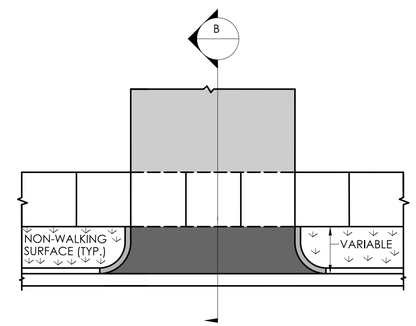

PLAN

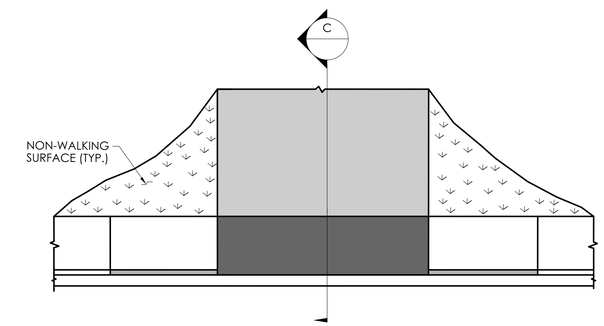

PLAN

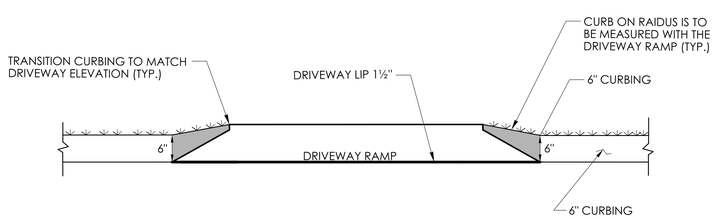

ELEVATION

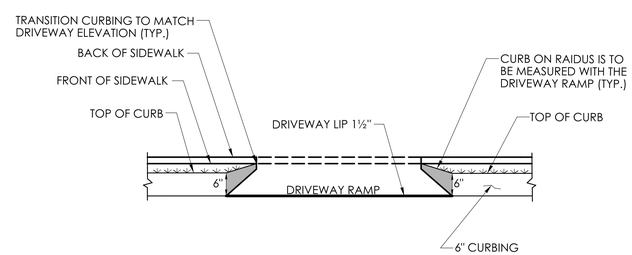

ELEVATION

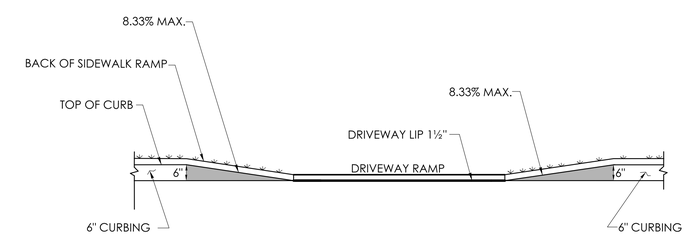

ELEVATION

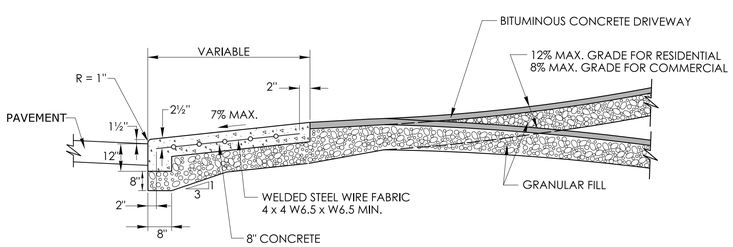

SECTION A

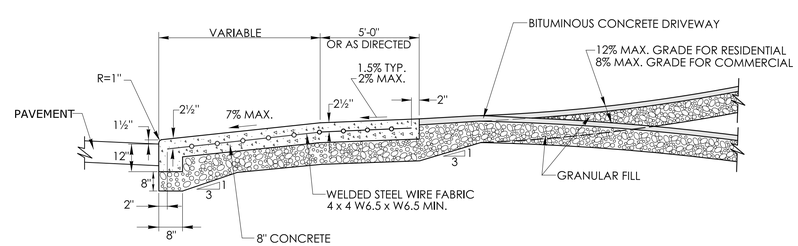

SECTION B

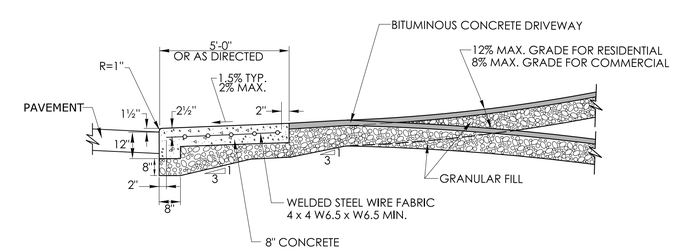

SECTION C

4/19/24 updated version

	NOT TO SCALE	SIGNATURE BLOCK: OFFICE OF ENGINEERING 2800 BERLIN TURNPIKE NEWINGTON, CT 06111	SUBMITTED BY: Digitally signed by Leo Fontaine, P.E. Date: 2024.12.19 15:10:16-05'00'	APPROVED BY: Digitally signed by Michael N. Calabrese, P.E. Date: 2025.01.29 12:48:28-05'00'	CTDOT CONNECTICUT DEPARTMENT OF TRANSPORTATION	CTDOT STANDARD SHEET	STANDARD SHEET TITLE: **CONCRETE DRIVEWAY RAMPS**	STANDARD SHEET NO.: **HW-924_01**

PLOTTED DATE: 11/25/2024