MASSACHUSETTS DEPARTMENT OF TRANSPORTATION
HIGHWAY DIVISION

PLAN AND PROFILE OF

CHURCH STREET

(BRIDGE NO. E-10-011)

IN THE TOWN OF

ERVING

FRANKLIN COUNTY

FEDERAL AID PROJECT NO. NHP(BNNHS)-0032(050)X

ERVING
CHURCH STREET BRIDGE REPLACEMENT

STATE	FED. AID PROJ. NO.	SHEET NO.	TOTAL SHEETS
MA	NHP(BNNHS)-0032(050)X	1	33
PROJECT FILE NO.	612982		

TITLE SHEET & INDEX

THESE PLANS ARE SUPPLEMENTED BY THE LATEST EDITIONS OF THE FOLLOWING PUBLICATIONS, AS IDENTIFIED IN THE CONTRACT SPECIAL PROVISIONS: THE MASSDOT CONSTRUCTION STANDARD DETAILS, THE MASSDOT STANDARD DRAWINGS FOR SIGNS AND SUPPORTS, THE MASSDOT STANDARD DRAWINGS FOR TRAFFIC SIGNALS AND HIGHWAY LIGHTING, THE MASSDOT OVERHEAD SIGNAL STRUCTURE AND FOUNDATION STANDARD DRAWINGS, THE MASSDOT TRAFFIC MANAGEMENT PLANS AND DETAIL DRAWINGS, AND THE ANSI AMERICAN STANDARD FOR NURSERY STOCK.

INDEX

SHEET NO.	DESCRIPTION
1	TITLE SHEET & INDEX
2	LEGEND, ABBREVIATIONS & GENERAL NOTES
3	TYPICAL SECTION & PAVEMENT NOTES
4	CONSTRUCTION PLAN
5	PROFILE
6	CURB TIE & GRADING PLAN
7	TRAFFIC SIGN & PAVEMENT MARKING PLAN
8-10	DETOUR PLANS
11	UTILITY PLAN
12-13	CONSTRUCTION DETAILS
14-31	BRIDGE PLANS
32-33	CROSS SECTIONS

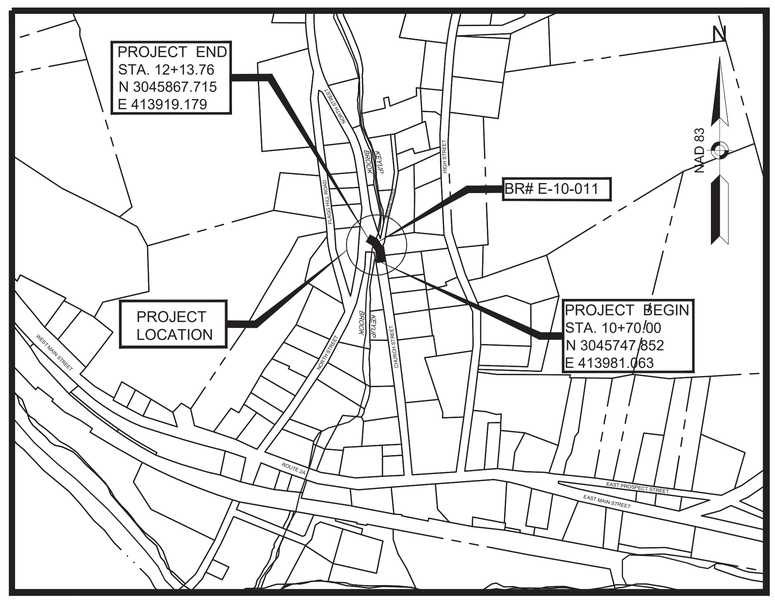

0 300 600 900 1200

SCALE: 1" = 300'

LENGTH OF PROJECT = 143.76 FEET = 0.027 MILES

DESIGN DESIGNATION (CHURCH STREET)

DESIGN SPEED	25 MPH
AADT (2021)	1113
AADT (2031)	1247
K	13%
D	51%
T (PEAK HOUR)	8.6%
T (AVERAGE DAY)	3.8%
DHV	145
DDHV	74
FUNCTIONAL CLASSIFICATION	RURAL MAJOR COLLECTOR

COMMONWEALTH OF MASSACHUSETTS
SCOTT R. BRUSO
STRUCTURAL
No. 48061
REGISTERED PROFESSIONAL ENGINEER

Scott Bruso Digitally signed by Scott Bruso Date: 2025.08.26 09:36:58 -04'00'

Weston & Sampson
712 Brook Street, Suite 103
Rocky Hill, CT 06067
860.513.1473
www.westonandsampson.com

DATE	DESCRIPTION	REV #

massDOT
Massachusetts Department of Transportation
Highway Division

APPROVED

Carrie Lavallee, P.E. — Carrie Lavallee, P.E. 2025.09.02 11:56:31 -04'00' — 09/02/2025

CHIEF ENGINEER — **DATE**

612982_HD1-3(TITLE, LEGEND & NOTES, TYPICAL).DWG Plotted on 25-Aug-2025 3:06 PM

GENERAL NOTES:

1. TOPOGRAPHICAL INFORMATION BASED ON AN ON THE GROUND SURVEY PERFORMED BY WESTON & SAMPSON IN APRIL 2021. SURVEY NOTES ARE RECORDED IN MASSDOT SURVEY FIELD NOTEBOOK (33649). WETLAND FLAGGING WAS PERFORMED BY WESTON & SAMPSON IN APRIL, 2021 AND SUPPLEMENTED BY CHAPPELL ENGINEERING ASSOCIATES, LLC IN NOVEMBER 2023.
2. MASSDOT GEODETIC SURVEY SET THE HORIZONTAL AND VERTICAL CONTROL FOR THE PROJECT ON 5/28/2015. HORIZONTAL AND VERTICAL CONTROL WAS ESTABLISHED BY GPS OBSERVATION ON 5/28/2015. HORIZONTAL CONTROL WAS ESTABLISHED BY GPS OBSERVATION ON POINTS 1522 AND 1523 AND IS BASED ON THE NORTH AMERICAN DATUM OF 1983 (NAD 83). VERTICAL CONTROL WAS ESTABLISHED ON POINTS 1522 AND 1523 BY DIFFERENTIAL LEVELING FROM MAGS DISK #5845 AND IS BASED ON THE NORTH AMERICAN VERTICAL DATUM OF 1988 (NAVD 88).
3. THE LOCATIONS OF EXISTING UNDERGROUND UTILITIES ARE SHOWN IN AN APPROXIMATE WAY ONLY AND HAVE NOT BEEN INDEPENDENTLY VERIFIED BY THE OWNER OR ITS REPRESENTATIVE. THE CONTRACTOR SHALL DETERMINE THE EXACT LOCATION OF ALL EXISTING UTILITIES BEFORE COMMENCING WORK, AND AGREES TO BE FULLY RESPONSIBLE FOR ANY AND ALL DAMAGES WHICH MIGHT BE OCCASIONED BY THE CONTRACTOR'S FAILURE TO EXACTLY LOCATE AND PRESERVE ANY AND ALL UNDERGROUND UTILITIES. THE CONTRACTOR SHALL DIG TEST PITS WITH THE LOCATIONS BEING APPROVED BY THE ENGINEER PRIOR TO COMMENCEMENT OF WORK TO EXACTLY LOCATE EXISTING UTILIITES.
4. WHERE AN EXISTING UTILITY IS FOUND TO CONFLICT WITH THE PROPOSED WORK, THE LOCATION, ELEVATION AND SIZE OF THE UTILITY SHALL BE ACCURATELY DETERMINED WITHOUT DELAY BY THE CONTRACTOR AND THE INFORMATION FURNISHED TO THE ENGINEER FOR RESOLUTION OF THE CONFLICT.
5. THE CONTRACTOR SHALL MAKE ALL ARRANGEMENTS FOR THE ALTERATION AND ADJUSTMENT OF GAS, ELECTRIC, TELEPHONE AND ANY OTHER PRIVATE UTILITIES BY THE UTILITY OWNER. ANY ALTERATIONS SHALL BE INCIDENTAL TO THE PROJECT. THE CONTRACTOR IS RESPONSIBLE FOR THE TEMPORARY SUPPORT OF ALL UTILITIES TO REMAIN IN PLACE AND SHALL DESCRIBE IN WRITING, TO THE SATISFACTION OF THE ENGINEER, HIS METHOD OF TEMPORARY SUPPORT.
6. AREAS OUTSIDE THE LIMITS OF PROPOSED WORK DISTURBED BY THE CONTRACTOR'S OPERATIONS SHALL BE RESTORED BY THE CONTRACTOR TO THEIR ORIGINAL CONDITION AT THE CONTRACTOR'S EXPENSE.
7. THE TERM "PROPOSED (PROP)" INDICATES WORK TO BE CONSTRUCTED USING NEW MATERIALS OR, WHERE APPLICABLE, RE-USING EXISTING MATERIALS IDENTIFIED AS "REMOVE AND RESET (R&R)".
8. ALL EXISTING STATE, COUNTY AND TOWN LOCATION LINES AND PRIVATE PROPERTY LINES HAVE BEEN ESTABLISHED FROM AVAILABLE INFORMATION AND THEIR EXACT LOCATION ARE NOT GUARANTEED.
9. ALL EXCESS MATERIAL FROM ROADWAY RECONSTRUCTION OR THE EXCAVATION PROCESS SHALL BE REUSED ON SITE OR REMOVED FROM THE SITE AND DISPOSED OF IN A LEGAL AND PROPER MANNER.
10. THE CONTRACTOR SHALL CALL DIGSAFE AT 1-888-344-7233 AT LEAST 72 HOURS, SATURDAYS, AND HOLIDAYS EXCLUDED, PRIOR TO EXCAVATING AT ANY LOCATION. A COPY OF THE DIGSAFE PROJECT REFERENCE NUMBER(S) SHALL BE GIVEN TO THE TOWN PRIOR TO EXCAVATION.
11. MASSDOT WILL GENERALLY PROVIDE SURVEY WORK AS OUTLINED IN THE 2023 STANDARD SPECIFICATIONS FOR HIGHWAYS AND BRIDGES, SECTION 5.07, CONSTRUCTION STAKINGS. THE CONTRACTOR SHOULD EMPLOY QUALIFIED PERSONNEL FOR ANY ADDITIONAL LAYOUT.
12. JOINTS BETWEEN HOT MIX ASPHALT TRENCH PAVEMENT AND SAWCUT EXISTING PAVEMENT SHALL BE SEALED WITH BITUMEN AND BACKSANDED.
13. IF DEEMED NECESSARY DUE TO THE WORK, THE CONTRACTOR SHALL COORDINATE WITH THE TOWN OF ERVING HIGHWAY DEPARTMENT, THE ERVING FIRE DEPARTMENT, AND THE ENGINEER FOR APPROVAL OF SHUTTING DOWN ANY EXISTING WATER MAINS AND SHALL ALSO OBTAIN APPROVAL FOR DISRUPTING ANY EXISTING SEWER FLOWS.
14. THE CONTRACTOR SHALL BE AWARE THAT ONLY TOWN PERSONNEL ARE ALLOWED TO OPERATE WATER GATES AND HYDRANTS. ANY REQUESTS TO OPERATE THE GATES SHALL BE COORDINATED THROUGH THE ENGINEER.
15. THE CONTRACTOR SHALL COORDINATE ANY WORK FOR THE PROJECT WITH ALL ADJACENT/CONCURRENT PROJECTS AND CONTRACTORS.
16. THE CONTRACTOR SHALL INSTALL PRIOR TO COMMENCEMENT OF WORK, MAINTAIN, AND REMOVE AT THE END OF THE PROJECT INLET SEDIMENT CONTROL BAGS IN ALL CATCH BASINS, WITHIN OR ADJACENT TO THE PROJECT LIMITS. THE CONTRACTOR SHALL ALSO MAINTAIN SILT FENCE AND COMPOST FILTER TUBES AS SHOWN ON THE PLANS THROUGHOUT THE DURATION OF THE PROJECT AND REMOVE AT THE END.
17. ANY GRASS AREAS DISTURBED BY THE WORK SHALL BE RESTORED WITH LOAM AND SEED.
18. ANY LANDSCAPED AREAS DISTURBED BY THE WORK SHALL BE RESTORED TO EXISTING CONDITIONS WITH EXISTING OR NEW GROUND COVER MATERIALS AS DIRECTED BY THE ENGINEER. ANY PLANTS, SHRUBS, OR FLOWERS DISTURBED BY THE WORK SHALL BE RESET TO EXISTING CONDITIONS OR REPLACED WITH NEW PLANTS, SHRUBS, OR FLOWERS AS DIRECTED BY THE ENGINEER. ALL WORK TO RESTORE LANDSCAPE AREAS, NEW GROUND COVER MATERIALS, NEW PLANTS, NEW SHRUBS, OR NEW FLOWERS REQUIRED BY THE ENGINEER SHALL BE INCIDENTAL TO THE PROJECT.
19. CONTRACTOR TO COORDINATE WITH UTILITY POLE OWNERS IN AREAS WHERE UNDERGROUND UTILITY WORK IS WITHIN CLOSE PROXIMITY AND POSSIBLE UTILITY POLE SHORING IS REQUIRED WHILE INSTALLING PROPOSED UTILITIES.
20. RAISE AND ADJUST FRAMES AND GRATES, FRAMES AND COVERS AND GATE BOXES PRIOR TO PAVEMENT OVERLAY, IF REQUIRED.
21. CONTRACTOR IS RESPONSIBLE FOR REPLACING ANY PROPERTY PINS THAT ARE DAMAGED OR DESTROYED DURING CONSTRUCTION, TO THEIR LOCATION JUST PRIOR TO CONSTRUCTION.

PAVEMENT MARKINGS SYMBOLS

EXISTING	PROPOSED	DESCRIPTION
		PAVEMENT ARROW - WHITE
ONLY	ONLY	LEGEND "ONLY" - WHITE
	SL	STOP LINE
	CW	CROSSWALK
	SWL	SOLID WHITE LINE
	SYL	SOLID YELLOW LINE
	BWL	BROKEN WHITE LINE
	BYL	BROKEN YELLOW LINE
	DWL	DOTTED WHITE LINE
	DYL	DOTTED YELLOW LINE
	DWLEx	DOTTED WHITE LINE EXTENSION
	DYLEx	DOTTED YELLOW LINE EXTENSION
	DBWL	DOUBLE WHITE LINE
	DBYL	DOUBLE YELLOW LINE

GENERAL SYMBOLS

EXISTING	PROPOSED	DESCRIPTION
JB	JB	JERSEY BARRIER
CB	CB	CATCH BASIN
		CATCH BASIN CURB INLET
FP	FP	FLAG POLE
GP	GP	GAS PUMP
MB	MB	MAIL BOX
		POST SQUARE
		POST CIRCULAR
WELL	WELL	WELL
EHH	EHH	ELECTRIC HANDHOLE
		FENCE GATE POST
GG	GG	GAS GATE
BHL #	BHL #	BORING HOLE
MW #	MW #	MONITORING WELL
TP #	TP #	TEST PIT
		HYDRANT
		LIGHT POLE
CO.BD.		COUNTY BOUND
		GPS POINT
C	C	CABLE MANHOLE
D	D	DRAINAGE MANHOLE
E	E	ELECTRIC MANHOLE
G	G	GAS MANHOLE
M	M	MISC MANHOLE
S	S	SEWER MANHOLE
T	T	TELEPHONE MANHOLE
W	W	WATER MANHOLE
MHB	MHB	MASSACHUSETTS HIGHWAY BOUND
MON		MONUMENT
SB		STONE BOUND
TB		TOWN OR CITY BOUND
		TRAVERSE OR TRIANGULATION STATION
TPL or GUY	TPL or GUY	TROLLEY POLE OR GUY POLE
HTP		TRANSMISSION POLE
UFB	UFB	UTILITY POLE W/ FIREBOX
UPDL	UPDL	UTILITY POLE WITH DOUBLE LIGHT
ULT	ULT	UTILITY POLE W / 1 LIGHT
UPL	UPL	UTILITY POLE
		BUSH
•SIZE & TYPE		TREE
		STUMP
		SWAMP / MARSH
WG	WG	WATER GATE
PM	PM	PARKING METER
		OVERHEAD CABLE/WIRE
		CURBING
100 99		CONTOURS (ON-THE-GROUND SURVEY DATA)
100 99		CONTOURS (PHOTOGRAMMETRIC DATA)
		UNDERGROUND DRAIN PIPE (DOUBLE LINE 24 INCH AND OVER)
		UNDERGROUND ELECTRIC DUCT (DOUBLE LINE 24 INCH AND OVER)
		UNDERGROUND GAS MAIN (DOUBLE LINE 24 INCH AND OVER)
		UNDERGROUND SEWER MAIN (DOUBLE LINE 24 INCH AND OVER)
		UNDERGROUND TELEPHONE DUCT (DOUBLE LINE 24 INCH AND OVER)
		UNDERGROUND WATER MAIN (DOUBLE LINE 24 INCH AND OVER)
		BALANCED STONE WALL
		GUARD RAIL - STEEL POSTS
		GUARD RAIL - WOOD POSTS
		GUARD RAIL - DOUBLE FACE - STEEL POSTS
		GUARD RAIL - DOUBLE FACE - WOOD POSTS
		CHAIN LINK OR METAL FENCE
		WOOD FENCE
		HAY BALES/SILT FENCE
		TREE LINE
		SAWCUT LINE
		TOP OR BOTTOM OF SLOPE
		LIMIT OF EDGE OF PAVEMENT OR COLD PLANE AND OVERLAY
		BANK OF RIVER OR STREAM
		BORDER OF WETLAND
		100 FT WETLAND BUFFER
		200 FT RIVERFRONT BUFFER
		STATE HIGHWAY LAYOUT
		TOWN OR CITY LAYOUT
		COUNTY LAYOUT
		RAILROAD SIDELINE
		TOWN OR CITY BOUNDARY LINE
		PROPERTY LINE OR APPROXIMATE PROPERTY LINE
		EASEMENT

ABBREVIATIONS

GENERAL

AADT	ANNUAL AVERAGE DAILY TRAFFIC
ABAN	ABANDON
ADJ	ADJUST
APPROX.	APPROXIMATE
A.C.	ASPHALT CONCRETE
ACCM PIPE	ASPHALT COATED CORRUGATED METAL PIPE
BIT.	BITUMINOUS
BC	BOTTOM OF CURB
BD.	BOUND
BL	BASELINE
BLDG	BUILDING
BM	BENCHMARK
BO	BY OTHERS
BOS	BOTTOM OF SLOPE
BR.	BRIDGE
CB	CATCH BASIN
CBCI	CATCH BASIN WITH CURB INLET
CC	CEMENT CONCRETE
CCM	CEMENT CONCRETE MASONRY
CEM	CEMENT
CI	CURB INLET
CIP	CAST IRON PIPE
CLF	CHAIN LINK FENCE
CL	CENTERLINE
CMP	CORRUGATED METAL PIPE
CSP	CORRUGATED STEEL PIPE
CO.	COUNTY
CONC	CONCRETE
CONT	CONTINUOUS
CONST	CONSTRUCTION
CR GR	CROWN GRADE
DHV	DESIGN HOURLY VOLUME
DI	DROP INLET
DIA	DIAMETER
DIP	DUCTILE IRON PIPE
DW	STEADY DON'T WALK - PORTLAND ORANGE
DWY	DRIVEWAY
ELEV (or EL.)	ELEVATION
EMB	EMBANKMENT
EOP	EDGE OF PAVEMENT
EXIST (or EX)	EXISTING
EXC	EXCAVATION
F&C	FRAME AND COVER
F&G	FRAME AND GRATE
FDN.	FOUNDATION
FLDSTN	FIELDSTONE
GAR	GARAGE
GD	GROUND
GG	GAS GATE
GI	GUTTER INLET
GIP	GALVANIZED IRON PIPE
GRAN	GRANITE
GRAV	GRAVEL
GRD	GUARD
HDW	HEADWALL
HMA	HOT MIX ASPHALT
HOR	HORIZONTAL
HYD	HYDRANT
INV	INVERT
JCT	JUNCTION
L	LENGTH OF CURVE
LB	LEACH BASIN
LP	LIGHT POLE
LT	LEFT
MAX	MAXIMUM
MB	MAILBOX
MH	MANHOLE
MHB	MASSACHUSETTS HIGHWAY BOUND
MIN	MINIMUM
NIC	NOT IN CONTRACT
NO.	NUMBER
PC	POINT OF CURVATURE
PCC	POINT OF COMPOUND CURVATURE
PCR	PEDESTRIAN CURB RAMP
P.G.L.	PROFILE GRADE LINE
PI	POINT OF INTERSECTION
POC	POINT ON CURVE
POT	POINT ON TANGENT
PRC	POINT OF REVERSE CURVATURE
PROJ	PROJECT
PROP	PROPOSED
PSB	PLANTABLE SOIL BORROW
PT	POINT OF TANGENCY
PVC	POINT OF VERTICAL CURVATURE
PVI	POINT OF VERTICAL INTERSECTION
PVT	POINT OF VERTICAL TANGENCY
PVMT	PAVEMENT

ERVING
CHURCH STREET BRIDGE REPLACEMENT

STATE	FED. AID PROJ. NO.	SHEET NO.	TOTAL SHEETS
MA	NHP(BNNHS)-0032(050)X	2	33
PROJECT FILE NO.	612982		

LEGEND & ABBREVIATIONS

ABBREVIATIONS (cont.)

GENERAL

PWW	PAVED WATER WAY
R	RADIUS OF CURVATURE
R&D	REMOVE AND DISPOSE
RCP	REINFORCED CONCRETE PIPE
RD	ROAD
RDWY	ROADWAY
REM	REMOVE
RET	RETAIN
RET WALL	RETAINING WALL
ROW	RIGHT OF WAY
RR	RAILROAD
R&R	REMOVE AND RESET
R&S	REMOVE AND STACK
RT	RIGHT
SB	STONE BOUND
SHLD	SHOULDER
SMH	SEWER MANHOLE
ST	STREET
STA	STATION
SSD	STOPPING SIGHT DISTANCE
SHLO	STATE HIGHWAY LAYOUT LINE
SW	SIDEWALK
T	TANGENT DISTANCE OF CURVE/TRUCK %
TAN	TANGENT
TEMP	TEMPORARY
TC	TOP OF CURB
TOS	TOP OF SLOPE
TYP	TYPICAL
UP	UTILITY POLE
VAR	VARIES
VERT	VERTICAL
VC	VERTICAL CURVE
WG	WATER GATE
WIP	WROUGHT IRON PIPE
WM	WATER METER/WATER MAIN
X-SECT	CROSS SECTION

TRAFFIC SIGNAL ABBREVIATIONS

CAB	CABINET
CCVE	CLOSED CIRCUIT VIDEO EQUIPMENT
DW	STEADY UPRAISED HAND
FDW	FLASHING UPRAISED HAND
FR	FLASHING CIRCULAR RED
FRL	FLASHING RED LEFT ARROW
FRR	FLASHING RED RIGHT ARROW
FY	FLASHING CIRCULAR YELLOW
FYL	FLASHING YELLOW LEFT ARROW
FYR	FLASHING YELLOW RIGHT ARROW
G	STEADY CIRCULAR GREEN
GL	STEADY GREEN LEFT ARROW
GR	STEADY GREEN RIGHT ARROW
GSL	STEADY GREEN SLASH LEFT ARROW
GSR	STEADY GREEN SLASH RIGHT ARROW
GV	STEADY GREEN VERTICAL ARROW
OL	OVERLAP
PED	PEDESTRIAN
PTZ	PAN, TILT, ZOOM
R	STEADY CIRCULAR RED
RL	STEADY RED LEFT ARROW
RR	STEADY RED RIGHT ARROW
TR SIG	TRAFFIC SIGNAL
TSC	TRAFFIC SIGNAL CONDUIT
W	STEADY WALKING PERSON
Y	STEADY CIRCULAR YELLOW
YL	STEADY YELLOW LEFT ARROW

612982_HD1-3(TITLE, LEGEND & NOTES, TYPICAL).DWG Plotted on 18-Aug-2025 3:06 PM

ERVING
CHURCH STREET BRIDGE REPLACEMENT

STATE	FED. AID PROJ. NO.	SHEET NO.	TOTAL SHEETS
MA	NHP(BNNHS)-0032(050)X	3	33
PROJECT FILE NO.	612982		

TYPICAL SECTIONS AND PAVEMENT NOTES

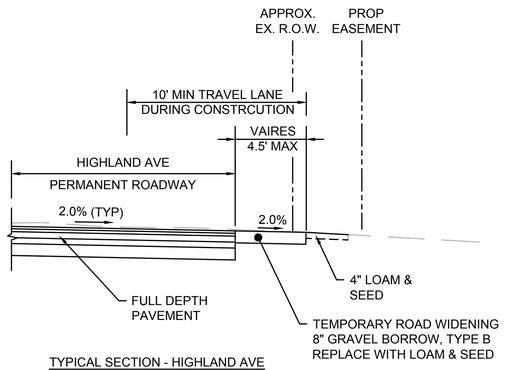

TYPICAL SECTION - HIGHLAND AVE
TEMPORARY ROAD WIDENING
SCALE: 1"=4'

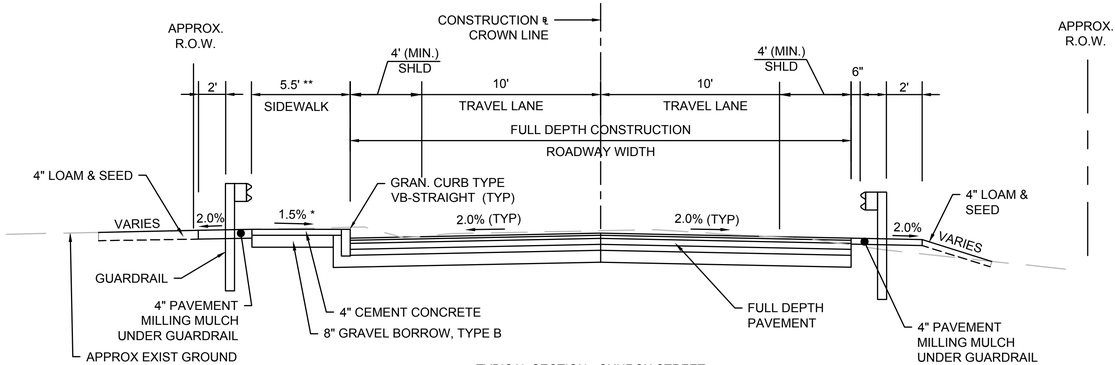

TYPICAL SECTION - CHURCH STREET
STA. 10+70.00 TO STA. 12+13.76
SCALE: 1"=4'

* TOLERANCE FOR CONSTRUCTION ±0.5%

** TRANSITION TO MATCH EXISTING SIDEWALK FROM STA 10+87 TO 11+13

PAVEMENT NOTES:

PROPOSED FULL DEPTH RECONSTRUCTION:

1½" SUPERPAVE BRIDGE SURFACE COURSE - 9.5 (SSC-B-9.5) OVER
ASPHALT EMULSION FOR TACK COAT OVERLAY
2" SUPERPAVE INTERMEDIATE COURSE - 12.5 (SIC-12.5) OVER
ASPHALT EMULSION FOR TACK COAT OVERLAY
4" SUPERPAVE BASE COURSE - 37.5 (SBC-37.5)
4" DENSE GRADED CRUSHED STONE
8" GRAVEL BORROW, TYPE B

CEMENT CONCRETE WALK AND WHEELCHAIR RAMP:

4" CEMENT CONCRETE OVER
8" GRAVEL BORROW, TYPE B

PROPOSED HOT MIX ASPHALT DRIVEWAY:

SURFACE: 1.50" SURFACE COURSE OVER
2.50" INTERMEDIATE COURSE

FOUNDATION: 8" GRAVEL BORROW, TYPE B

TACK COAT SHALL BE APPLIED AT RATE OF 0.06 - 0.08 GALLON PER SQUARE YARD OVER SMOOTH PAVED SURFACES.

612982_HD1-3(TITLE, LEGEND & NOTES, TYPICAL).DWG Plotted on 18-Aug-2025 3:06 PM

ERVING
CHURCH STREET BRIDGE REPLACEMENT

STATE	FED. AID PROJ. NO.	SHEET NO.	TOTAL SHEETS
MA	NHP(BNNHS)-0032(050)X	4	33
PROJECT FILE NO.	612982		

CONSTRUCTION PLAN

HIGHWAY GUARD DETAILS

STA 10+44 TO STA 10+55 LT, TRAILING ANCHORAGE
STA 10+55 TO STA 10+83 LT, TL-3
STA 10+83 TO STA 11+17 LT, TRANSITION TO BRIDGE RAIL
STA 11+62 RT, TRANSITION TO BRIDGE RAIL,
TRANSITION TO NCHRP 350 GUARDRAIL
STA 11+91 TO STA 12+17 RT, TRANSITION TO BRIDGE RAIL
STA 51+33 TO STA 51+89 RT, TL-3
STA 51+89 TO STA 52+00 RT, TRAILING ANCHORAGE
STA 49+87 TO STA 50+22 RT, TRANSITION TO NCHRP 350 GUARDRAIL
STA 50+22 TO STA 50+34 RT, TL-3
STA 50+34 TO STA 50+67 RT, TRANSITION TO BRIDGE RAIL

TRAFFIC SIGNAL CONDUIT

NONE

WATER SUPPLY ALTERATIONS

NONE

DRAINAGE DETAILS

NONE

NORTH STREET CONSTRUCTION BASELINE DATA

NUMBER	STARTING STATION	NORTHING	EASTING	CURVE DATA	LINE DATA	ENDING STATION	NORTHING	EASTING
L4	50+00.00	3045764.850	413899.406		N7°43'37"E 11.33'	50+11.33	3045776.074	413900.928
L5	50+11.33	3045776.074	413900.928		N7°02'36"E 24.33'	50+35.66	3045800.223	413903.912
C2	50+35.66	3045800.223	413903.912	R=2280.00' Δ=0°28'45" L=19.07' T=9.53'		50+54.73	3045819.170	413906.067
L6	50+54.73	3045819.170	413906.067		N4°14'58"E 11.46'	50+66.19	3045830.602	413906.916
L7	50+66.19	3045830.602	413906.916		N4°11'56"E 16.19'	50+82.38	3045846.747	413908.102
L8	50+82.38	3045846.747	413908.102		N4°13'12"E 51.61'	51+33.99	3045898.216	413911.899
C3	51+33.99	3045898.216	413911.899	R=600.00' Δ=13°14'33" L=138.68' T=69.65'		52+72.66	3046036.461	413906.102
L9	52+72.66	3046036.461	413906.102		N9°01'21"W 20.34'	52+93.01	3046056.550	413902.912

CHURCH ST CONSTRUCTION BASELINE DATA

NUMBER	STARTING STATION	NORTHING	EASTING	CURVE DATA	LINE DATA	ENDING STATION	NORTHING	EASTING
L1	10+00.00	3045678.263	413988.741		N6°17'46"W 70.00'	10+70.00	3045747.839	413981.064
L2	10+70.00	3045747.839	413981.064		N5°13'46"W 39.19'	11+09.18	3045786.863	413977.493
C1	11+09.18	3045786.863	413977.493	R=98.00' Δ=66°20'28" L=113.47' T=64.06'		12+22.66	3045870.905	413910.882
L3	12+22.66	3045870.905	413910.882		N71°34'14"W 1.03'	12+23.68	3045871.229	413909.908

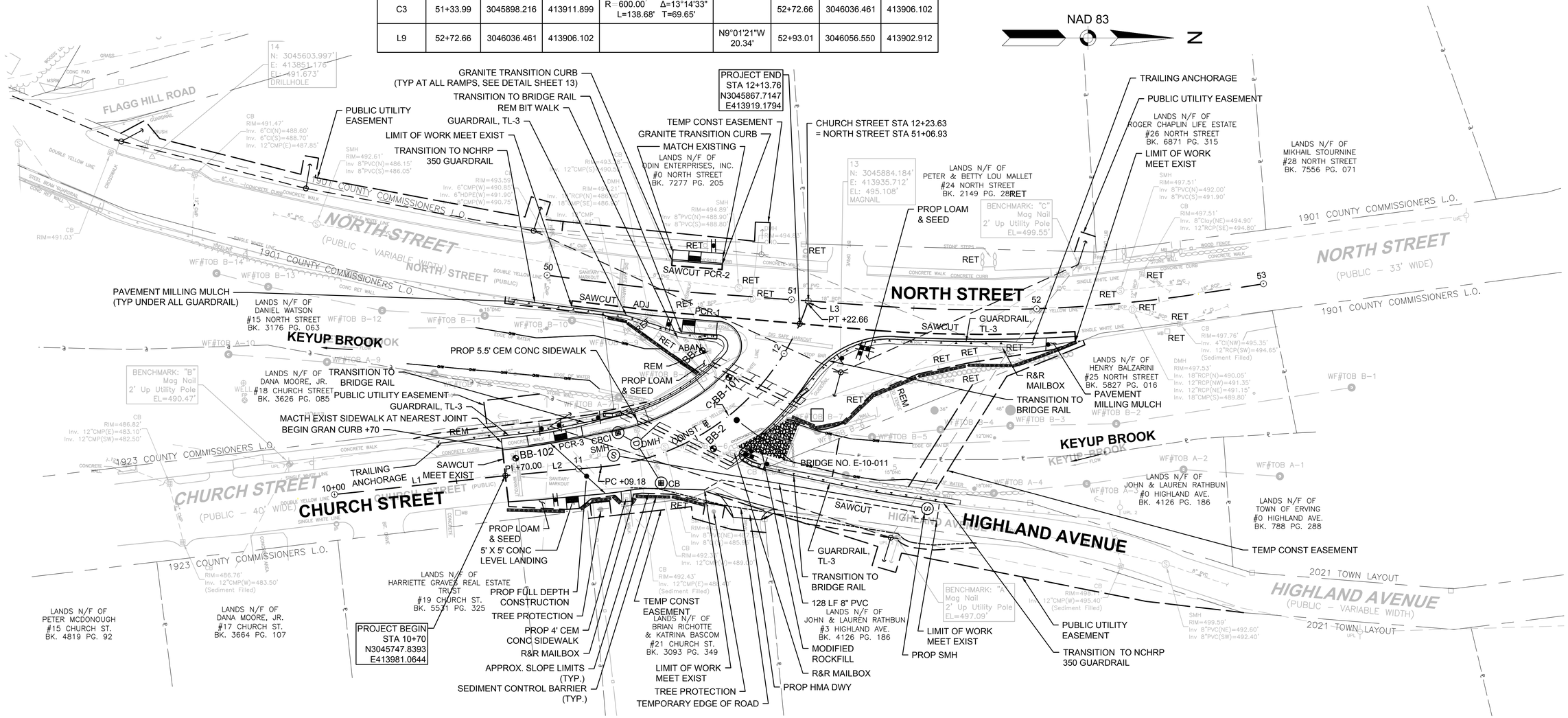

FOR PROFILE SEE SHEET 5

612982_HD4-5(CONSTRUCTION PLAN & PROFILE).DWG Plotted on 18-Aug-2025 3:06 PM

ERVING
CHURCH STREET BRIDGE REPLACEMENT

STATE	FED. AID PROJ. NO.	SHEET NO.	TOTAL SHEETS
MA	NHP(BNNHS)-0032(050)X	5	33
PROJECT FILE NO.	612982		

PROFILE

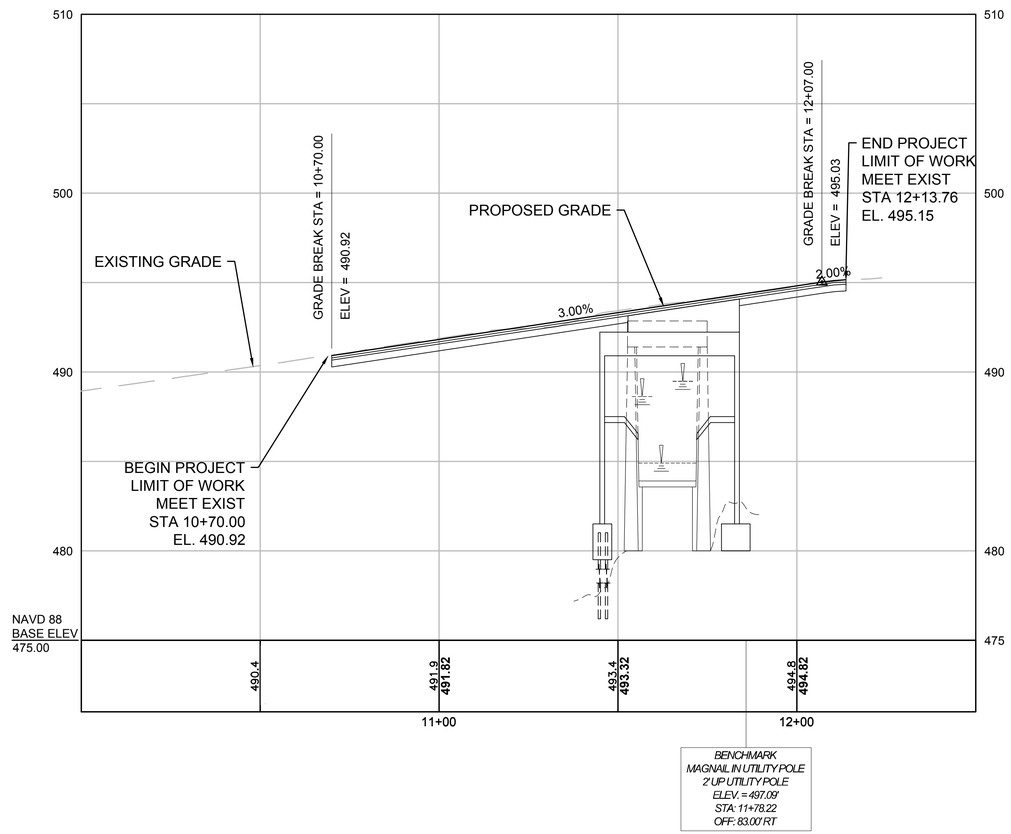

HOR. SCALE IN FEET
20 0 20 40
4 0 4 8
VER. SCALE IN FEET

FOR CONSTRUCTION PLAN SEE SHEET 4

612982_HD4-5(CONSTRUCTION PLAN & PROFILE).DWG Plotted on 18-Aug-2025 3:06 PM

ERVING
CHURCH STREET BRIDGE REPLACEMENT

STATE	FED. AID PROJ. NO.	SHEET NO.	TOTAL SHEETS
MA	NHP(BNNHS)-0032(050)X	6	33
PROJECT FILE NO.	612982		

CURB TIE AND GRADING PLAN

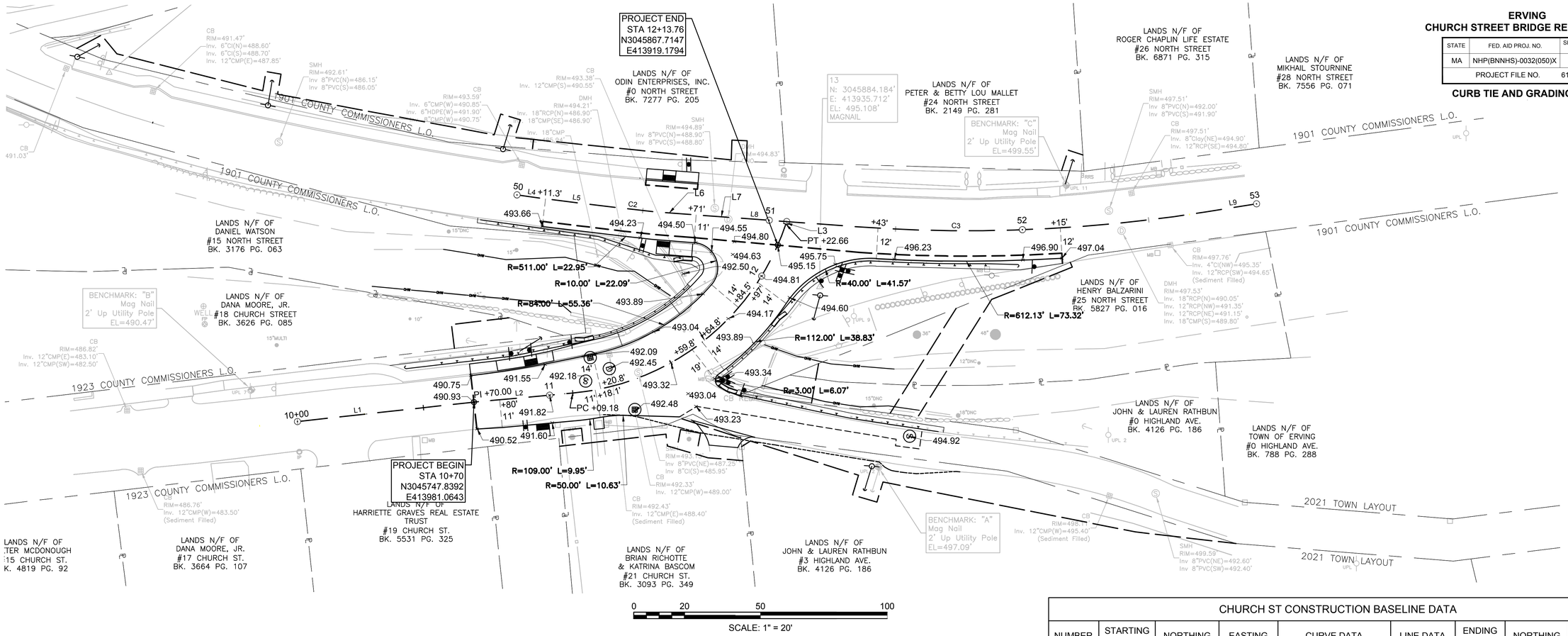

CHURCH ST CONSTRUCTION BASELINE DATA								
NUMBER	STARTING STATION	NORTHING	EASTING	CURVE DATA	LINE DATA	ENDING STATION	NORTHING	EASTING
L1	10+00.00	3045678.263	413988.741		N6°17'46"W 70.00'	10+70.00	3045747.839	413981.064
L2	10+70.00	3045747.839	413981.064		N5°13'46"W 39.19'	11+09.18	3045786.863	413977.493
C1	11+09.18	3045786.863	413977.493	R=98.00' Δ=66°20'28" L=113.47' T=64.06'		12+22.66	3045870.905	413910.882
L3	12+22.66	3045870.905	413910.882		N71°34'14"W 1.03'	12+23.68	3045871.229	413909.908

NORTH STREET CONSTRUCTION BASELINE DATA								
NUMBER	STARTING STATION	NORTHING	EASTING	CURVE DATA	LINE DATA	ENDING STATION	NORTHING	EASTING
L4	50+00.00	3045764.850	413899.406		N7°43'37"E 11.33'	50+11.33	3045776.074	413900.928
L5	50+11.33	3045776.074	413900.928		N7°02'36"E 24.33'	50+35.66	3045800.223	413903.912
C2	50+35.66	3045800.223	413903.912	R=2280.00' Δ=0°28'45" L=19.07' T=9.53'		50+54.73	3045819.170	413906.067
L6	50+54.73	3045819.170	413906.067		N4°14'58"E 11.46'	50+66.19	3045830.602	413906.916
L7	50+66.19	3045830.602	413906.916		N4°11'56"E 16.19'	50+82.38	3045846.747	413908.102
L8	50+82.38	3045846.747	413908.102		N4°13'12"E 51.61'	51+33.99	3045898.216	413911.899
C3	51+33.99	3045898.216	413911.899	R=600.00' Δ=13°14'33" L=138.68' T=69.65'		52+72.66	3046036.461	413906.102
L9	52+72.66	3046036.461	413906.102		N9°01'21"W 20.34'	52+93.01	3046056.550	413902.912

612982_HDR(CURB TIE & GRADING PLAN).DWG Plotted on 18-Aug-2025 3:07 PM

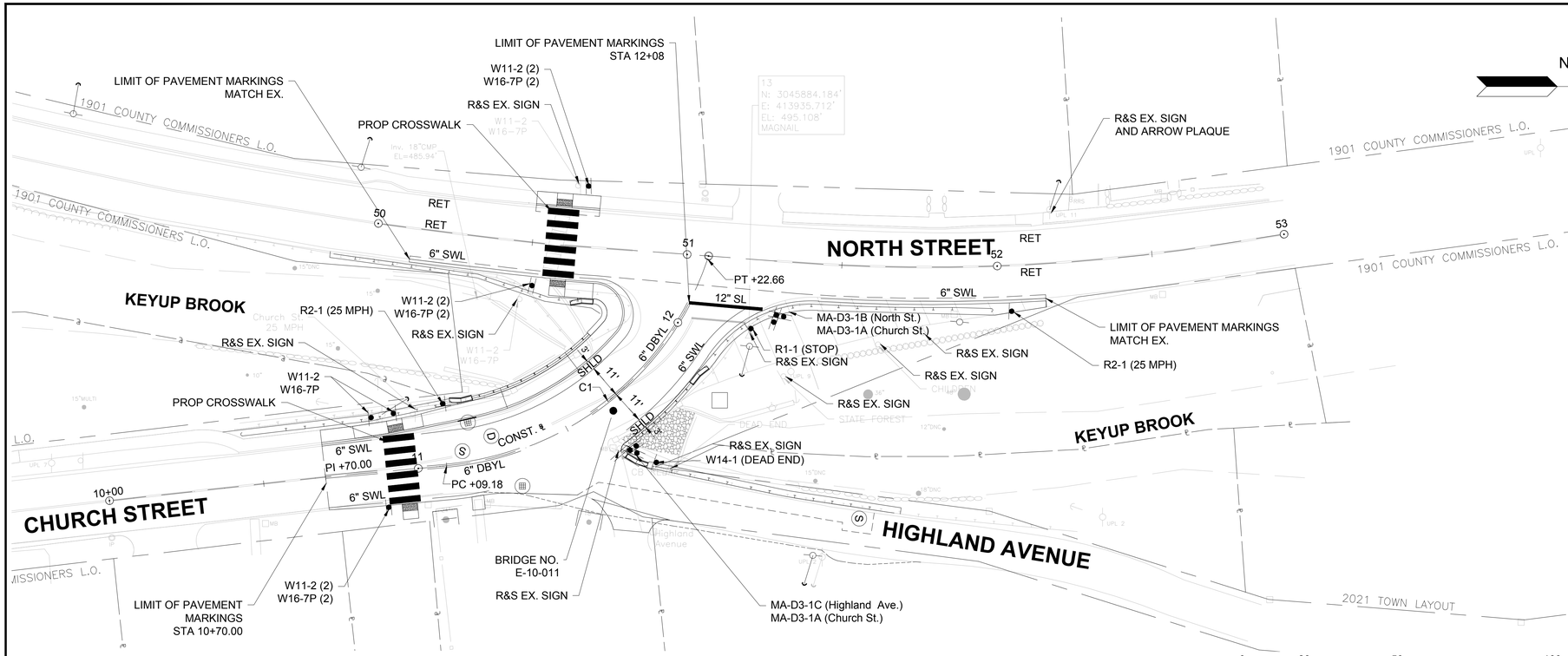

ERVING
CHURCH STREET BRIDGE REPLACEMENT

STATE	FED. AID PROJ. NO.	SHEET NO.	TOTAL SHEETS
MA	NHP(BNNHS)-0032(050)X	7	33
PROJECT FILE NO.	612982		

TRAFFIC SIGNS AND PAVEMENT MARKING PLAN

NOTE:

THE EXISTING CROSSWALK ON NORTH STREET SHALL BE ERADICATED BEFORE NEW MARKINGS ARE PLACED.

ANY PAVEMENT MARKING WITHIN 4' OF THE EDGE OF THE PROPOSED CROSWALK MARKINGS SHALL BE ERADICATED.

SIGN SUMMARY TABLE

IDENTIFICATION NUMBER	SIZE OF SIGN WIDTH	SIZE OF SIGN HEIGHT	TEXT	TEXT DIMENSIONS (INCHES) LETTER HEIGHT	VERTICAL SPACING	ARROW RTE. MKR.	NUMBER OF SIGNS REQUIRED	COLOR BACKGROUND	LEGEND	BORDER	POST SIZE AND NUMBER REQUIRED	UNIT AREA (S.F.)	AREA IN SQUARE FEET
MA-D3-1A	48"	12"	Church St	6" / 4"	3" TO TOP 3" TO BOTTOM	N/A	4 (BACK TO BACK)	GREEN (RETROREFLECTIVE)	WHITE (RETROREFLECTIVE)	WHITE	P-5 (2)	3.5	14
MA-D3-1B	42"	12"	North St	6" / 4"	3" TO TOP 3" TO BOTTOM	N/A	2 (BACK TO BACK)	GREEN (RETROREFLECTIVE)	WHITE (RETROREFLECTIVE)	WHITE	P-5 (1)	3	6
MA-D3-1C	54"	12"	Highland Ave	6" / 4"	2.75" TO TOP 3.25" TO BOTTOM	N/A	2 (BACK TO BACK)	GREEN (RETROREFLECTIVE)	WHITE (RETROREFLECTIVE)	WHITE	P-5 (2)	4.5	9
R1-1	30"	30"	STOP	SEE MUTCD AND STANDARD HIGHWAY SIGNS MANUAL, LATEST EDITIONS			1	RED	WHITE	WHITE	P-5 (1)	6.25	6.25
W11-2	30"	30"					8	FLUORESCENT YELLOW-GREEN	BLACK	BLACK	P-5 (5)	6.25	18.75
W14-1	30"	30"	DEAD END				1	YELLOW	BLACK	BLACK	P-5 (1)	6.25	6.25
W16-7P	24"	12"					8	FLUORESCENT YELLOW-GREEN	BLACK	BLACK	N/A	2	4
R2-1	24"	30"	SPEED LIMIT 25				2	WHITE	BLACK	BLACK	P-5 (1)	5	10

CROSSWALK DETAIL:

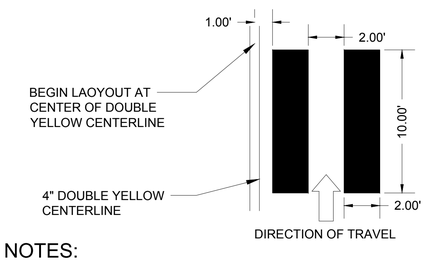

NOTES:

1. SEE TRAFFIC SIGNS AND PAVEMENT MARKING PLANS FOR CROSSWALK LOCATIONS

STREET SIGN DETAIL:

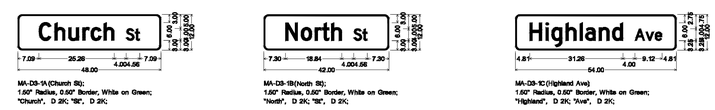

NOTES:

1. SEE TRAFFIC SIGNS AND PAVEMENT MARKING PLANS FOR SIGN LOCATIONS
2. HIGH INTENSITY REFLECTIVE SHEETING SHALL BE USED FOR ALL SIGNS
3. ERECT ALL SIGNS IN ACCORDANCE WITH THE LATEST "MANUAL ON UNIFORM TRAFFIC CONTROL DEVICES" (MUTCD), AND "MASSHIGHWAY'S STANDARD DRAWINGS FOR SIGNS AND SUPPORTS", DATED 1990, AND GUIDE SIGN POLICY FOR SECONDARY STATE HIGHWAYS, 2005 EDITION

612982_HD7(SIGN & PAVEMENT MARKING PLAN).DWG Plotted on 18-Aug-2025 3:07 PM

ERVING
CHURCH STREET BRIDGE REPLACEMENT

STATE	FED. AID PROJ. NO.	SHEET NO.	TOTAL SHEETS
MA	NHP(BNNHS)-0032(050)X	8	33
PROJECT FILE NO.	612982		

DETOUR PLAN

INSET 'A'
SCALE: 1" = 400'

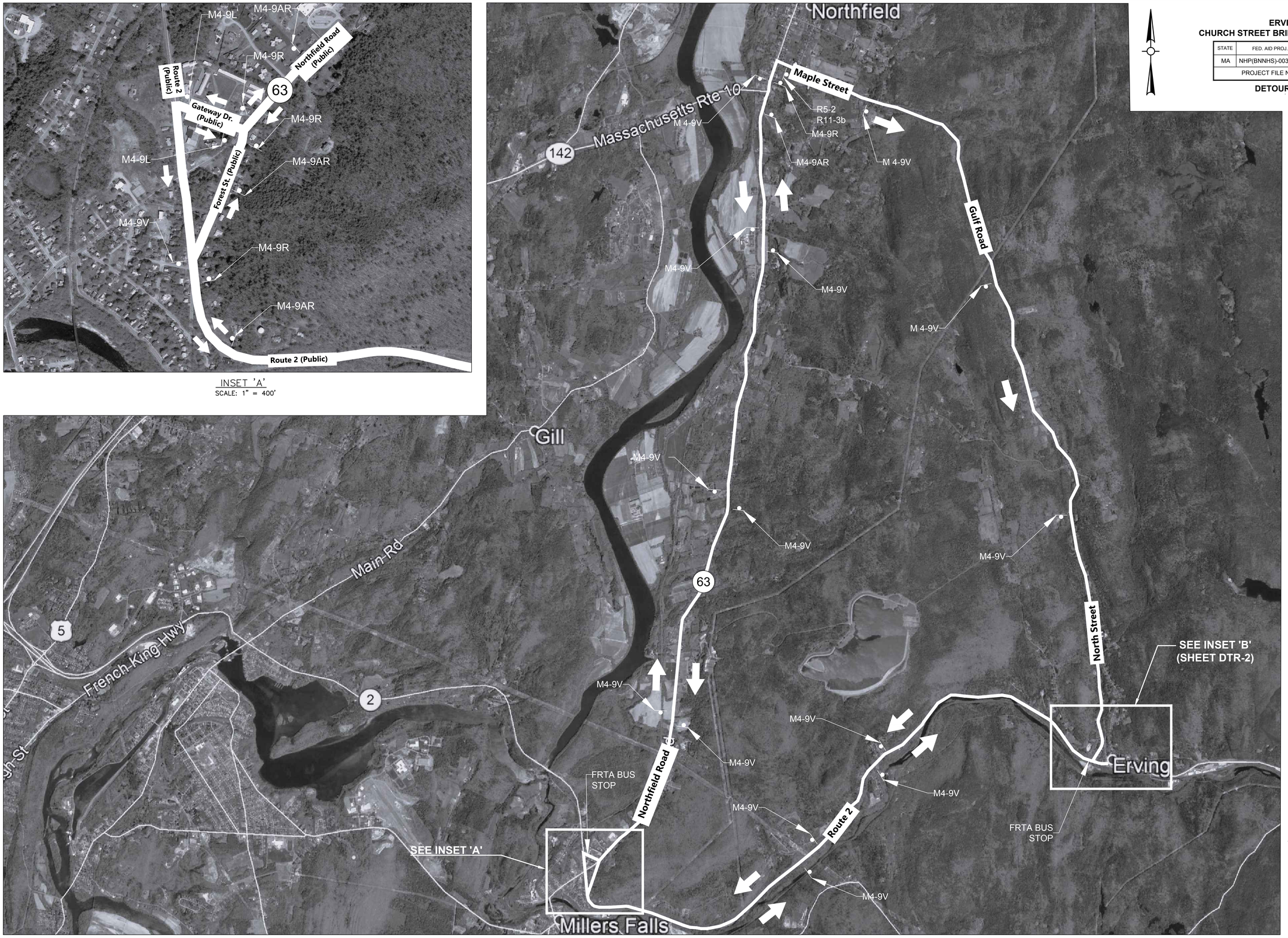

DETOUR PLAN
SCALE: 1" = 2000'

SEE SHEET DTR-3 FOR SIGN SUMMARY AND LEGEND.

612982_HD8-10(DETOUR PLAN & NOTES).DWG Plotted on 18-Aug-2025 3:08 PM

ERVING
CHURCH STREET BRIDGE REPLACEMENT

STATE	FED. AID PROJ. NO.	SHEET NO.	TOTAL SHEETS
MA	NHP(BNNHS)-0032(050)X	9	33
PROJECT FILE NO.	612982		

DETOUR PLAN

DETOUR PLAN
SCALE: 1" = 120'

SHORT-TERM PAVEMENT EDGE DROP-OFFS

THIS GUIDANCE IS ADOPTED FROM THE *ROADSIDE DESIGN GUIDE*, 4TH EDITION.

PAVEMENT DROP-OFFS MAY OCCUR DURING PAVING, EXCAVATION, AND OTHER CONSTRUCTION ACTIVITIES. DROP-OFFS CREATE HAZARDS FOR VEHICLES IF NOT PROPERLY MITIGATED. THE FOLLOWING APPLIES FOR ALL ROADS WITH SPEED LIMITS GREATER THAN 30 MPH; FOR ROADS WITH SPEEDS OF 30 MPH OR LESS, TREATMENTS FOR PAVEMENT EDGE DROP-OFFS SHALL BE AT THE DISCRETION OF THE ENGINEER. DROP-OFFS BETWEEN ADJACENT, OPEN TRAVEL LANES SHALL NOT EXCEED 2", AND ANY DROP-OFF IN EXCESS OF 3" SHALL NOT BE LEFT UNATTENDED WITHOUT ONE OF THESE MITIGATION MEASURES APPLIED.

- SHOULDER DROP-OFFS 3" OR LESS ADJACENT TO A SHOULDER OR ACTIVE LANE SHOULD BE MITIGATED BY:
- A W8-9 (LOW SHOULDER) SIGN IN ADVANCE OF AND AT REGULAR INTERVALS THROUGHOUT THE TREATMENT; OR
- THE PLACEMENT OF DRUMS ON THE TRAFFIC SIDE OF THE DROP OFF.

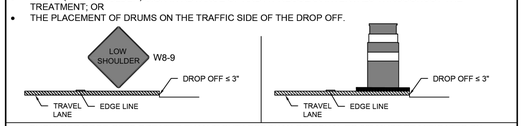

- SHOULDER DROP-OFFS GREATER THAN 3" BUT LESS THAN OR EQUAL TO 36" MUST BE MITIGATED BY:
- A W8-9 (LOW SHOULDER) SIGN IN ADVANCE OF AND AT REGULAR INTERVALS THROUGHOUT THE TREATMENT AND THE PLACEMENT OF DRUMS ON THE TRAFFIC SIDE OF THE DROP-OFF, OFFSET AT LEAST 2' FROM THE TRAVEL LANE; OR
- A W8-9 (LOW SHOULDER) SIGN IN ADVANCE OF AND AT REGULAR INTERVALS THROUGHOUT THE TREATMENT AND THE PLACEMENT OF A TEMPORARY WEDGE OF MATERIAL ALONG THE FACE OF THE DROP-OFF. THE WEDGE SHOULD CONSIST OF STABLE MATERIAL PLACED ON A 2H:1V OR FLATTER SLOPE.

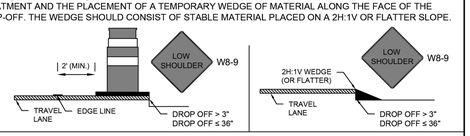

- SHOULDER DROP-OFFS GREATER THAN 36" MUST BE PROTECTED BY TEMPORARY BARRIER DESIGNED TO MASSDOT STANDARDS.

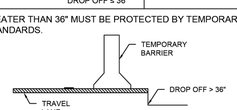

massDOT Massachusetts Department of Transportation Highway Division

WORK ZONE SAFETY
STANDARD DETAILS AND DRAWINGS

PAVEMENT EDGE
DROP-OFF GUIDANCE

DATE OF ISSUE	07/01/2023
REVISED	
REVISED	
FIGURE NO.	GEN-8

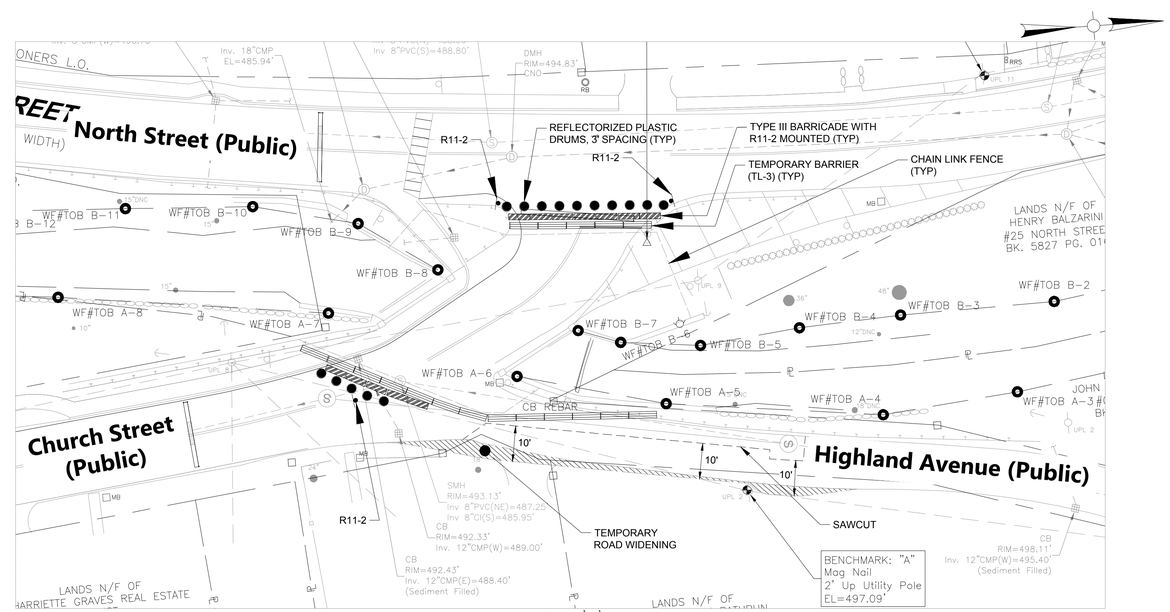

INSET 'B'
SCALE: 1" = 20'

612982_HD8-10(DETOUR PLAN & NOTES).DWG Plotted on 18-Aug-2025 3:08 PM

TRAFFIC MANAGEMENT NOTES:

GENERAL

ALL TEMPORARY TRAFFIC CONTROL WORK SHALL CONFORM TO THE LATEST EDITION OF THE "MANUAL ON UNIFORM TRAFFIC CONTROL DEVICES" (MUTCD 2009) AND ALL REVISIONS.

ALL SIGN LEGENDS, BORDERS AND MOUNTING SHALL BE IN ACCORDANCE WITH THE MUTCD.

TEMPORARY CONSTRUCTION SIGNING AND ALL OTHER TRAFFIC CONTROL DEVICES SHALL BE IN PLACE PRIOR TO THE START OF ANY WORK.

TEMPORARY CONSTRUCTION SIGNING, BARRICADES AND ALL OTHER NECESSARY WORK ZONE TRAFFIC CONTROL DEVICES SHALL BE REMOVED FROM THE HIGHWAY OR COVERED WHEN THEY ARE NOT REQUIRED FOR CONTROL OF TRAFFIC.

CONTRACTORS SHALL NOTIFY EACH ABUTTER AT LEAST 24 HOURS IN ADVANCE OF THE START OF ANY WORK THAT WILL REQUIRE THE TEMPORARY CLOSURE OF ACCESS, SUCH AS GAS LINE INSTALLATION, EXISTING PAVEMENT EXCAVATION, TEMPORARY DRIVEWAY PAVEMENT PLACEMENT AND SIMILAR OPERATIONS.

THE FIRST TEN PLASTIC DRUMS OF A TAPER SHALL BE MOUNTED WITH SEQUENTIAL FLASHING LIGHTS.

DISTANCES ARE A GUIDE AND MAY BE ADJUSTED IN THE FIELD BY THE ENGINEER.

MINIMUM LANE WIDTH IS TO BE 11 FEET UNLESS OTHERWISE SHOWN. MINIMUM LANE WIDTH TO BE MEASURED FROM THE EDGE OF DRUMS OR MEDIAN BARRIER.

CONTRACTOR TO COORDINATE WITH MASSDOT AND THE TOWN OF ERVING TO DETERMINE ALLOWABLE WORK HOURS.

CONTRACTOR SHALL PROVIDE A SAFE TEMPORARY ADA COMPLIANT PEDESTRIAN ACCESS WHERE
EXISTING SIDEWALKS OR OTHER PEDESTRIAN AREAS ARE AFFECTED BY CONSTRUCTION WORK.

FLASHING ARROW BOARD SHALL BE SET IN "ARROW MODE" WHEN USED FOR ACTUAL LANE OR PARTIAL LANE CLOSURES ONLY. FOR SHOULDER CLOSURES, BULBS TO BE ILLUMINATED IN A NON-DIRECTIONAL CAUTION CONFIGURATION TO AVOID UNNECESSARY LANE SHIFTS.

ALL NECESSARY PERMITS AND/OR APPROVALS FROM THE APPROPRIATE JURISDICTIONS MUST BE OBTAINED PRIOR TO THE START OF THE WORK.

ALL TEMPORARY FACILITIES, INCLUDING BUT NOT LIMITED TO, TEMPORARY PEDESTRIAN PASSAGEWAYS AROUND A CONSTRUCTION SITE, SHALL COMPLY WITH 521 CMR.

GRADE DIFFERENCES

WHERE THERE IS A LONGITUDINAL DIFFERENCE IN ELEVATION BETWEEN EXISTING PAVEMENT AND COLD PLANE OR NEW PAVEMENT, THE CONTRACTOR SHALL PATCH A TEMPORARY BIT. CONC. WEDGE WITH A 12:1 (OR FLATTER) SLOPE FOR SMOOTH TRANSITION. (SEE DETAIL).

CROSS-SECTIONAL GRADE DIFFERENCES IN EXCESS OF 2 INCHES DURING NON-WORKING HOURS WILL REQUIRE DELINEATION BY USE OF DRUMS AND SHALL BE ACCOMPANIED BY THE "LOW SHOULDER" SIGN (W8-9).

CROSS-SECTIONAL GRADE DIFFERENCES IN EXCESS OF 4 INCHES DURING NON-WORKING HOURS SHALL BE PROTECTED BY BACKFILLING WITH A WEDGE OF EARTHWORK TO BE COMPACTED AT 4:1 SLOPE AND WILL ALSO REQUIRE DELINEATION BY USE OF DRUMS. GRADE DIFFERENCES IN EXCESS OF 4 INCHES DURING WORKING HOURS SHALL BE ACCOMPANIED BY THE"SHOULDER DROP OFF" SIGN (W8-9a).

A MINIMUM SLOPE OF 4:1 MUST BE MAINTAINED AFTER WORKING HOURS DURING SUBBASE AND BASE COURSE INSTALLATION ALONG EDGE OF THE TRAVEL WAY. A MINIMUM SLOPE OF 8:1 MUST BE MAINTAINED ON ALL ABUTTER ACCESS DRIVES AND A MINIMUM SLOPE OF 12:1 MUST BE MAINTAINED ON ALL SIDEWALKS.

WHERE PROPOSED ROADWAY CONSTRUCTION ADJACENT TO EXISTING ROADWAY IS ON A DIFFERENT GRADE, A SLOPE NOT STEEPER THAN 2:1 SHALL BE PROVIDED BETWEEN THE TWO ROADWAYS. WHERE SUCH SLOPE IS NOT POSSIBLE, TEMPORARY SHEETING SHALL BE INSTALLED.

CONSTRUCTION SIGNING

SIGNS AND SIGN SUPPORTS LOCATED ON OR NEAR THE TRAVELED WAY, AND REFLECTORIZED PLASTIC DRUMS WITH LIGHTING DEVICES MOUNTED ON THEM, MUST PASS THE CRITERIA SET FORTH IN THE "MANUAL FOR ASSESSING SAFETY HARDWARE" (MASH).

CONSTRUCTION SIGNING SHALL REMAIN IN PLACE FOR THE ENTIRE PROPOSED PROJECT DURATION, UNLESS OTHERWISE DIRECTED BY THE ENGINEER.

ALL SIGNS, INCLUDING EXISTING, THAT ARE NOT REPRESENTATIVE OF ACTUAL WORK CONDITIONS SHALL BE EITHER COVERED OR REMOVED WHEN NOT APPLICABLE.

USE MA-W20-7b SIGNS ONLY WHILE POLICE ARE DIRECTING TRAFFIC. THEY SHALL BE TAKEN DOWN OR COVERED AT THE CLOSE OF EACH DAY.

SIGN AND VMS LOCATIONS ARE APPROXIMATE. FINAL LOCATIONS SHALL BE APPROVED THE APPROPRIATE JURISDICTION.

ADDITIONAL ADVANCE WARNING MAY BE PROVIDED WITH PORTABLE VARIABLE MESSAGE SIGNS, AS DIRECTED BY THE ENGINEER.

ALL SIGNS SHALL BE MOUNTED ON THEIR OWN STANDARD SIGN SUPPORTS.

PAVEMENT MARKINGS

PAVEMENT MARKINGS WHICH ARE NO LONGER APPLICABLE SHALL BE REMOVED. APPLY TEMPORARY MARKINGS WHERE SHOWN ON THE TRAFFIC MANAGEMENT PLANS.

ON PROJECTS WHERE PAVEMENT OVERLAY IS NOT DESIGNATED, EXISTING PAVEMENT MARKINGS WHICH ARE IN CONFLICT WITH TEMPORARY TRAFFIC CONTROLS SHOULD BE REMOVED BY AN ACCEPTABLE METHOD SO AS NOT TO DAMAGE PAVEMENT SURFACE.

TEMPORARY PAVEMENT MARKINGS SHALL BE USED AS NECESSARY DURING CONSTRUCTION AND SHALL BE REFLECTORIZED PAINT OF STANDARD HIGHWAY COLORS (WHITE OR YELLOW).

RETAIN EXISTING SIGNS UNLESS OTHERWISE NOTED.

CHANNELIZATION

MAXIMUM SPACING OF TRAFFIC DEVICES IN A TAPER CHANNELIZATION (DRUMS OR CONES) IS EQUALIN FEET TO THE SPEED LIMIT IN MPH AND EQUAL TO 2.0 TIMES THE SPEED LIMIT IN MPH WHEN USED FOR TANGENT CHANNELIZATION.

REFLECTORIZED DRUMS USED TO MARK HAZARDS OVERNIGHT SHALL BE EQUIPPED WITH FLASHING WARNING LIGHTS.

FLASHING OR STEADY BURN WARNING LIGHTS SHALL ALSO BE USED ON BARRICADES OR WHERE DIRECTED BY THE ENGINEER.

METAL DRUMS ARE PROHIBITED AS CHANNELIZATION DEVICES.

TEMPORARY TRAFFIC SIGN SUMMARY

IDENTIFICATION NUMBER	SIZE OF SIGN		QUANTITY	TEXT	COLOR		
	WIDTH	HEIGHT			BACKGROUND	LEGEND	BORDER
W16-8p	36"	12"	2	CHURCH ST.	FLUORESCENT ORANGE	BLACK	BLACK
M4-8a	24"	18"	2	END DETOUR	FLUORESCENT ORANGE	BLACK	BLACK
M4-9L	30"	24"	2	DETOUR ←	FLUORESCENT ORANGE	BLACK	BLACK
M4-9AR	30"	24"	4	DETOUR ↱	FLUORESCENT ORANGE	BLACK	BLACK
M4-9R	30"	24"	4	DETOUR →	FLUORESCENT ORANGE	BLACK	BLACK
M4-9V	30"	24"	25	DETOUR ↑	FLUORESCENT ORANGE	BLACK	BLACK
R3-1	30"	30"	2		WHITE	BLACK WITH RED CIRCLE / SLASH	BLACK
R3-2	30"	30"	2		WHITE	BLACK WITH RED CIRCLE / SLASH	BLACK
R5-2	24"	24"	5		WHITE	BLACK WITH RED CIRCLE / SLASH	BLACK
R11-2	48"	30"	1	BRIDGE CLOSED	WHITE	BLACK	BLACK
R11-3a	60"	30"	1	BRIDGE CLOSED AHEAD LOCAL TRAFFIC ONLY	WHITE	BLACK	BLACK
R11-3b	60"	30"	2	BRIDGE CLOSED AHEAD FOLLOW DETOUR	WHITE	BLACK	BLACK
R11-3c	60"	30"	1	BRIDGE CLOSED AHEAD 7.5 MILES SB TRAFFIC ONLY	WHITE	BLACK	BLACK
W20-2	36"	36"	2	DETOUR 1000 FT	FLUORESCENT ORANGE	BLACK	BLACK

ERVING
CHURCH STREET BRIDGE REPLACEMENT

STATE	FED. AID PROJ. NO.	SHEET NO.	TOTAL SHEETS
MA	NHP(BNNHS)-0032(050)X	10	33
PROJECT FILE NO.	612982		

NOTES, LEGENDS AND TRAFFIC SIGNS

LEGEND:

- TRAFFIC DETOUR SIGN
- TYPE III BARRICADE WITH WARNING LIGHTS
- REFLECTORIZED PLASTIC DRUM OR 36" CONE
- TEMPORARY PRECAST CONCRETE BARRIER
- WORK AREA

612982_HD8-10(DETOUR PLAN & NOTES).DWG Plotted on 18-Aug-2025 3:08 PM

ERVING
CHURCH STREET BRIDGE REPLACEMENT

STATE	FED. AID PROJ. NO.	SHEET NO.	TOTAL SHEETS
MA	NHP(BNNHS)-0032(050)X	11	33
PROJECT FILE NO.	612982		

UTILITY PLAN

DRAINAGE STRUCTURE TABLE						
NAME/TYPE	STATION	OFFSET	RIM ELEV.	INV. ELEV. IN	INV. ELEV. OUT	REMARKS
CBCI-1	11+18.46	12.9 LT	492.11		I=488.25' (DMH-1)	CBCI
CB-2	11+30.61	11.4 RT	492.51		I=489.43' (DMH-1)	CB
DMH-1	11+25.64	7.0 LT	492.44	I=489.30' (CB-2) I=488.20' (CBCI-1)	I=488.10' ()	DMH

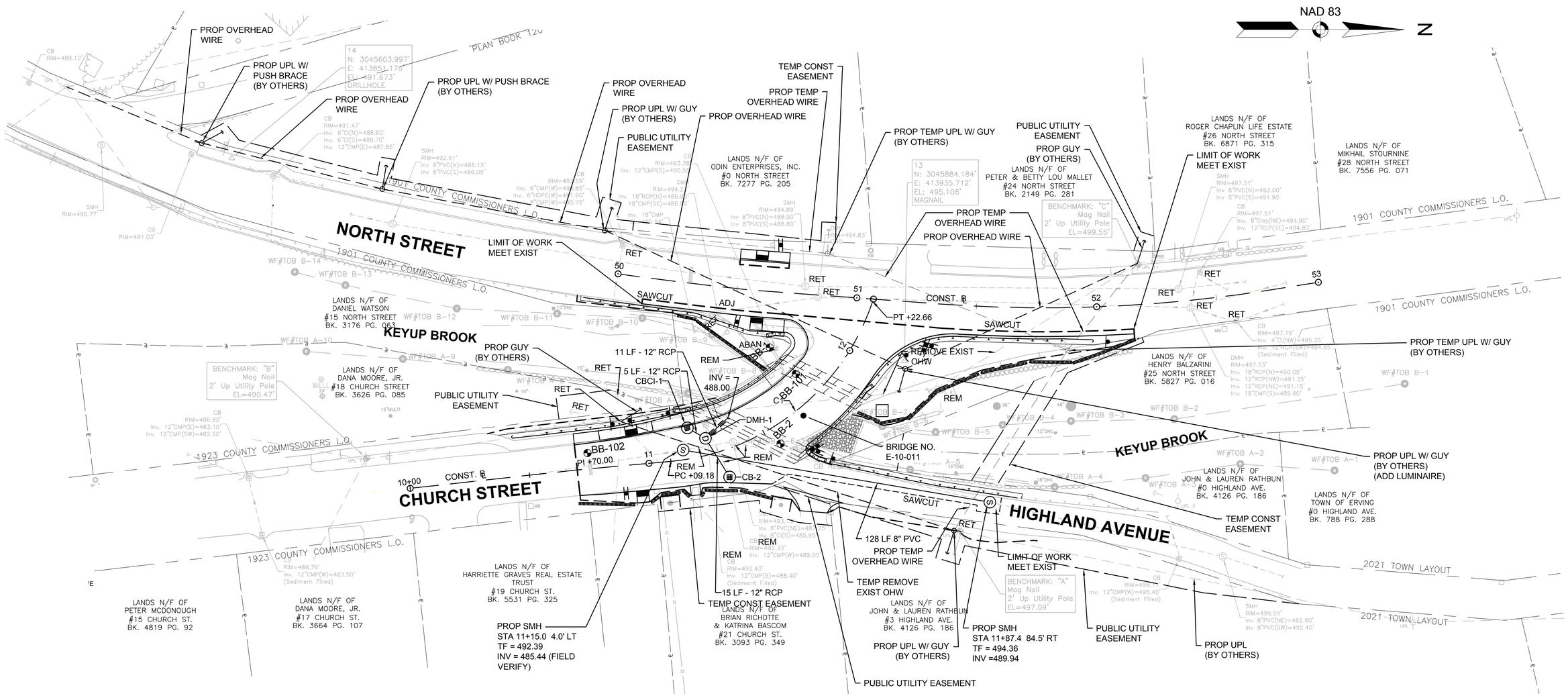

612982_HD11(UTILITY PLAN).DWG Plotted on 18-Aug-2025 3:08 PM

RATIO OF 3H:1V OR STEEPER. LONGER SLOPES OF 3H:1V MAY REQUIRE LARGER TUBE DIAMETER OR ADDITIONAL COURSING OF FILTER TUBES TO CREATE A FILTER BERM. REFER TO MANUFACTURER'S RECOMMENDATIONS FOR SITUATIONS WITH LONGER OR STEEPER SLOPES.

2. INSTALL TUBES ALONG CONTOURS AND PERPENDICULAR TO SHEET OR CONCENTRATED FLOW.
3. TUBE LOCATION MAY BE SHIFTED TO ADJUST TO LANDSCAPE FEATURES, BUT SHALL PROTECT UNDISTURBED AREA AND VEGETATION TO MAXIMUM EXTENT POSSIBLE.
4. DO NOT INSTALL IN PERENNIAL, EPHEMERAL OR INTERMITTENT STREAMS.
5. ADDITIONAL TUBES SHALL BE USED AT THE DIRECTION OF THE ENGINEER.
6. ADDITIONAL STAKING SHALL BE USED AT THE DIRECTION OF THE ENGINEER.

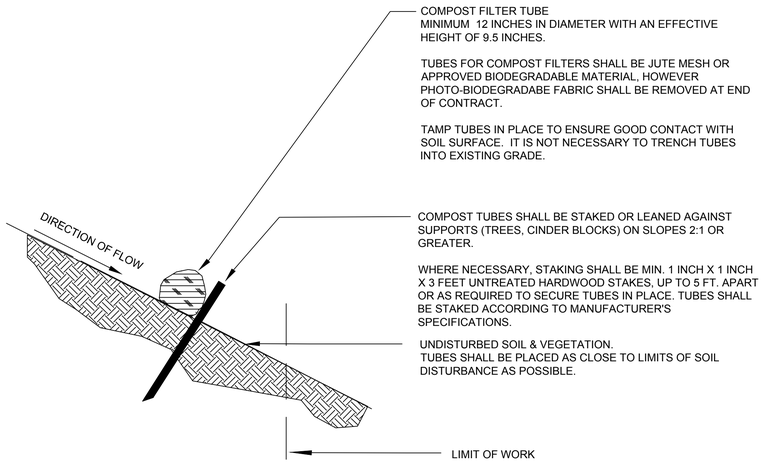

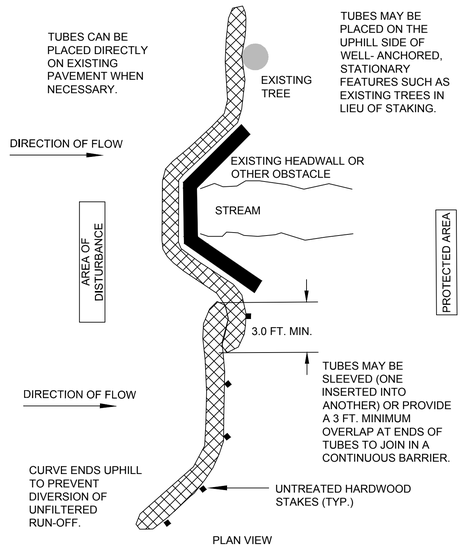

SINGLE COMPOST FILTER TUBE DETAIL

N.T.S.

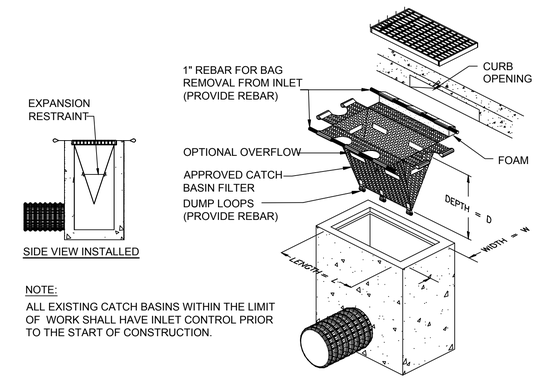

NOTE:
ALL EXISTING CATCH BASINS WITHIN THE LIMIT OF WORK SHALL HAVE INLET CONTROL PRIOR TO THE START OF CONSTRUCTION.

CATCH BASIN INLET PROTECTION

N.T.S.

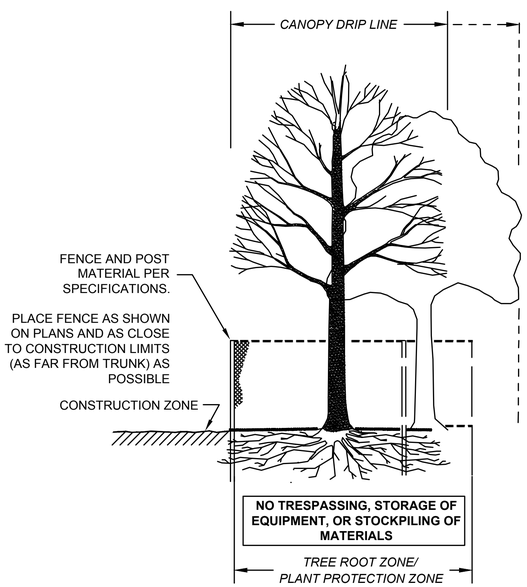

SECTION - FENCE PROTECTION OF ROOT ZONE

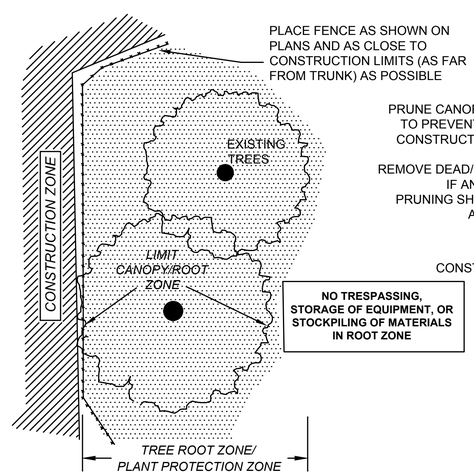

PLAN VIEW - FENCE PROTECTION OF ROOT ZONE

TREE PROTECTION - ROOT ZONE

N.T.S.

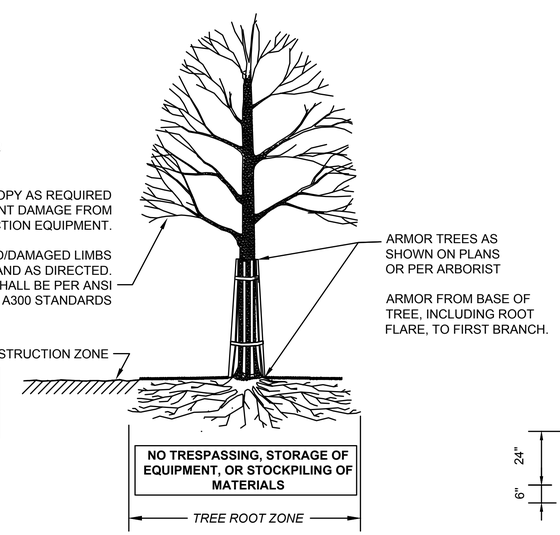

SECTION - TRUNK ARMORING & PRUNING

TREE PROTECTION - TRUNK

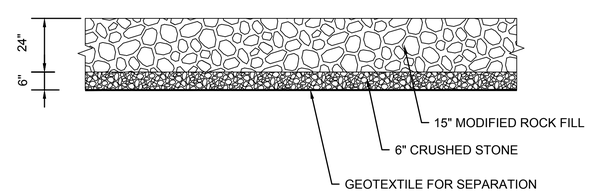

MODIFIED ROCKFILL - SECTION VIEW

N.T.S.

ERVING
CHURCH STREET BRIDGE REPLACEMENT

STATE	FED. AID PROJ. NO.	SHEET NO.	TOTAL SHEETS
MA	NHP(BNNHS)-0032(050)X	12	33
PROJECT FILE NO.	612982		

CONSTRUCTION DETAILS

612982_HD12-14(CONSTRUCTION DETAILS).DWG Plotted on 18-Aug-2025 3:09 PM

612982_HD12-14(CONSTRUCTION DETAILS).DWG Plotted on 18-Aug-2025 3:09 PM

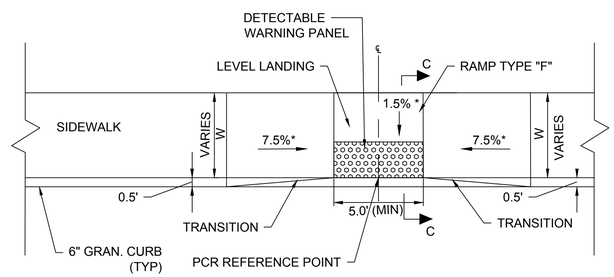

CEMENT CONCRETE PEDESTRIAN CURB RAMP
N.T.S.

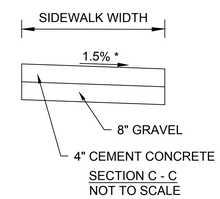

SECTION C - C
NOT TO SCALE

PEDESTRIAN CURB RAMP NOTES:

1. CONTRACTOR IS RESPONSIBLE FOR CONSTRUCTION OF RAMP WITHIN TOLERANCES GIVEN UNLESS OTHERWISE NOTED. FAILURE TO MEET TOLERANCES, OR PRIOR NOTICE TO ENGINEER THAT TOLERANCES CANNOT BE MET, WILL REQUIRE RECONSTRUCTION TO PROPER TOLERANCES AT NO ADDITIONAL EXPENSE TO THE OWNER.
2. INSTALL DETECTABLE WARNING PANEL ACCORDING TO MASSDOT CONST. STANDARDS DETAILS DWG NO. E 107.6.5

* TOLERANCE FOR CONSTRUCTION ±0.5%

RAMP NO.	RAMP TYPE	RAMP REFERENCE POINT			LENGTH OF PRIMARY RAMP (W1)	WIDTH OF SIDEWALK (W)	WIDTH OF RAMP	DEPTH OF LEVEL LANDING	ROADWAY GUTTER SLOPE	TRANSITION LENGTH	
		ROADWAY NAME	STATION	OFFSET						LEFT	RIGHT
1	F	NORTH STREET	50+59.1	11.5' RT	-	5.5'	5.0'	5.5	+1.5%±	9.0'	-
2	F	NORTH STREET	50+59.5	12.7' LT	-	4.5'	5.0'	4.5	-1.5%±	6.5'	9.0'
3	F	CHURCH STREET	10+93.8	12.4' LT	-	4.0'	5.0'	4.5	-3.0%±	11.0'	6.5'

NOTE:
ROADWAY GUTTER SLOPES SHOULD BE MEASURED FROM LEFT TO RIGHT BASED ON THE PERSPECTIVE OF FACING THE RAMP FROM THE ROADWAY.

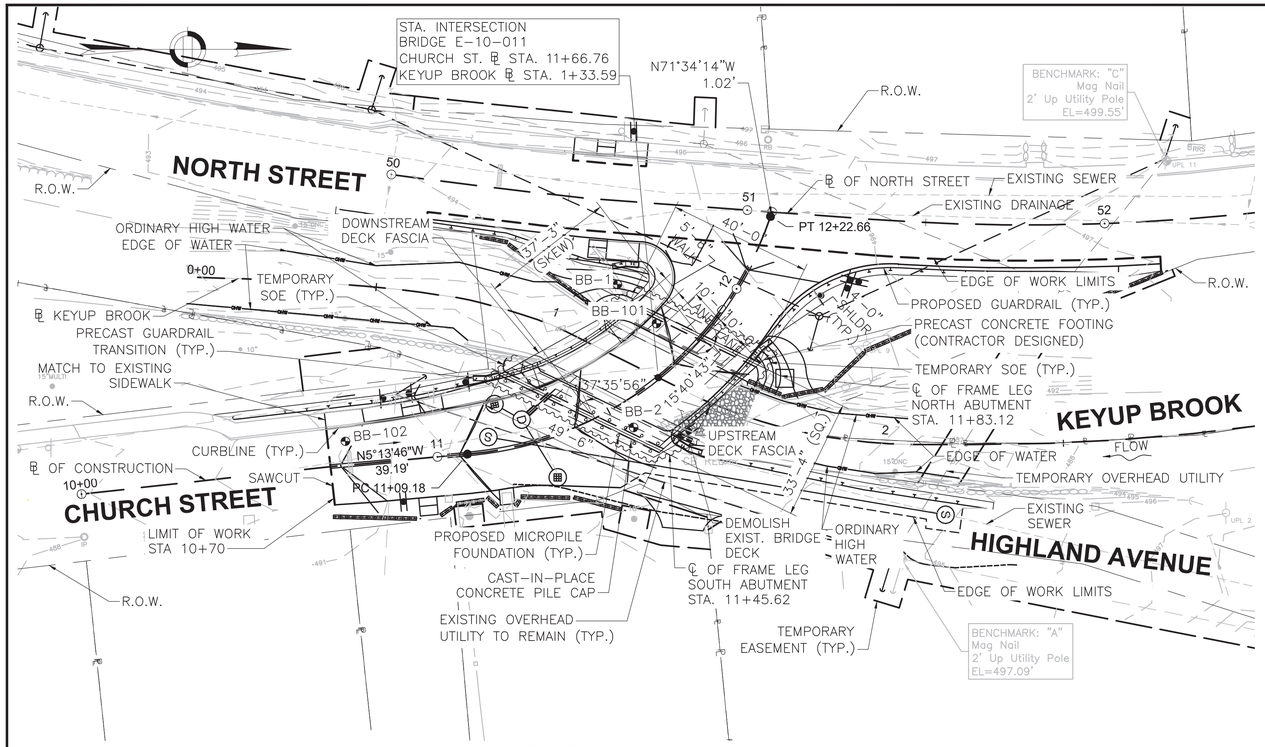

KEY PLAN

SCALE: 1" = 20'

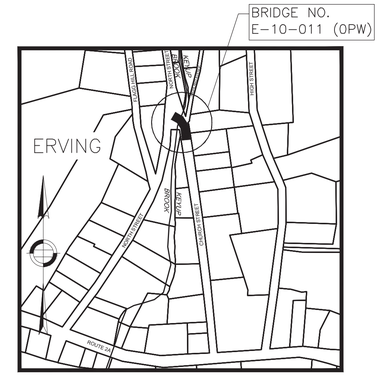

LOCUS

SCALE: 1" = 500'

HORIZONTAL CURVE DATA	
T	64.06'
L	113.47'
R	98.00'
Δ	66° 20' 28"

ERVING
CHURCH STREET

STATE	FED. AID PROJ. NO.	SHEET NO.	TOTAL SHEETS
MA	NHP(BNNHS)-0032(050)X	14	33
PROJECT FILE NO.	612982		

KEY PLAN & PROFILES

ESTIMATED QUANTITIES

	ITEM	QUANTITY	
115.1	DEMOLITION OF BRIDGE NO. E-10-011 (OPW)	1	LS
127.1	REINFORCED CONCRETE EXCAVATION	2	CY
140.	BRIDGE EXCAVATION	470	CY
144.	CLASS B ROCK EXCAVATION	25	CY
151.2	GRAVEL BORROW FOR BACKFILLING STRUCTURES AND PIPES	65	CY
450.60	SUPERPAVE BRIDGE SURFACE COURSE – 9.5 (SSC-B-9.5)	51	TON
450.70	SUPERPAVE BRIDGE PROTECTIVE COURSE – 9.5 (SPC-B-9.5)	11	TON
482.31	SAWING & SEALING JOINTS IN ASPHALT PAVEMENT AT BRIDGES	90	FT
628.24	TRANSITION TO BRIDGE RAIL	4	EA
901.2	SHOTCRETE CHANNEL SLOPE	14	CY
905.2	5000 PSI, $\frac{3}{8}$ INCH, 710 HP CEMENT CONCRETE	2	CY
909.2	CEMENTITIOUS MORTAR FOR PATCHING	80	SF
945.10	DRILLED MICROPILES	336	FT
948.60	MICROPILE LOAD TEST VERIFICATION	1	EA
948.61	MICROPILE PROOF LOAD TEST	1	EA
953.1	TEMPORARY SUPPORT OF EXCAVATION	370	SY
991.1	CONTROL OF WATER – STRUCTURE NO. E-10-011	1	LS
995.01	BRIDGE STRUCTURE, BRIDGE. NO. E-10-011 (CLV)	1	LS

INDEX OF BRIDGE SHEETS:

1.....KEY PLAN AND PROFILES
2.....GENERAL NOTES
3.....BORING LOGS I
4.....BORING LOGS II
5.....GENERAL PLAN AND ELEVATION
6.....DEMOLITION PLAN
7.....PILE LAYOUT PLAN
8.....FOUNDATION PLAN
9.....FRAMING PLAN
10.....SUPERSTRUCTURE DETAILS
11.....CURVED BRIDGE RAIL DETAILS I
12.....CURVED BRIDGE RAIL DETAILS II
13.....TOP OF PRECAST HIGHWAY GUARDRAIL TRANSITION FOR S3-MTL4 RAILING (SHEET 1 OF 2)
14.....TOP OF PRECAST HIGHWAY GUARDRAIL TRANSITION FOR S3-MTL4 RAILING (SHEET 2 OF 2)
15.....TRANSITION BASE DETAILS
16.....BRIDGE RAIL DETAILS
17.....WALL REPAIR DETAILS
18.....WATER HANDLING PLAN

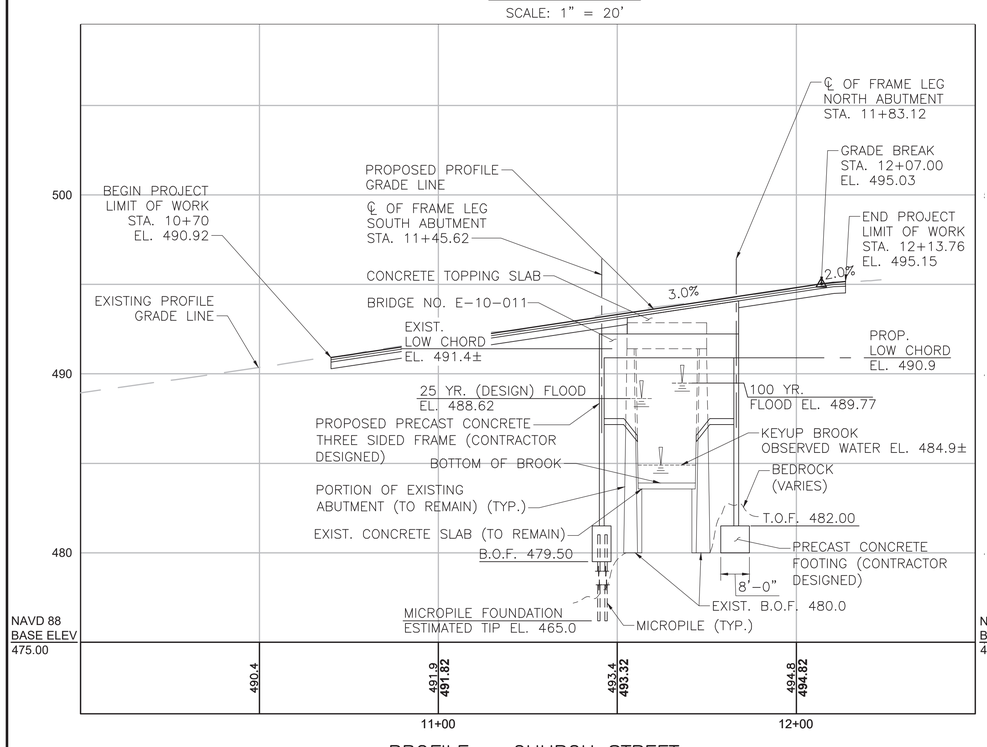

PROFILE – CHURCH STREET

HORIZONTAL SCALE: 1" = 20'
VERTICAL SCALE: 1" = 4'

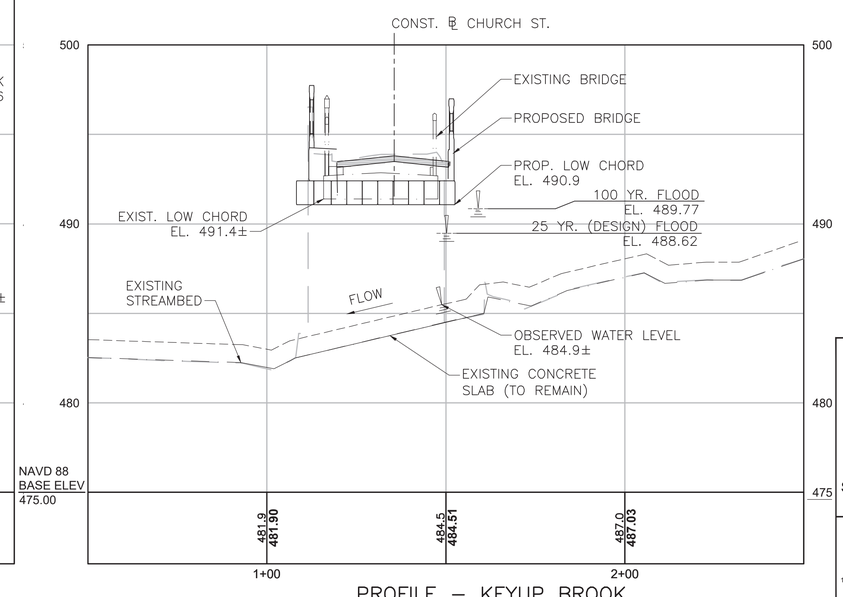

PROFILE – KEYUP BROOK

HORIZONTAL SCALE: 1" = 20'
VERTICAL SCALE: 1" = 4'

COMMONWEALTH OF MASSACHUSETTS
SCOTT R. BRUSO
STRUCTURAL
No. 48061
REGISTERED PROFESSIONAL ENGINEER

Scott Bruso Digitally signed by Scott Bruso Date: 2025.08.25 09:36:11 -04'00'

Weston & Sampson Engineers, Inc.
100 Foxborough Boulevard, Foxborough, MA 02035
508.698.3034 800.SAMPSON
www.westonandsampson.com

9/6/2025	ISSUED FOR CONSTRUCTION

massDOT Massachusetts Department of Transportation Highway Division

PROPOSED BRIDGE REPLACEMENT
ERVING
CHURCH STREET
OVER KEYUP BROOK
MASSACHUSETTS DEPARTMENT OF TRANSPORTATION
HIGHWAY DIVISION
10 PARK PLAZA BOSTON, MASS

Alexander K. Bardow, P.E. — Digitally signed by Alexander K. Bardow, P.E. Date: 2025.08.26 12:31:58 -04'00'
STATE BRIDGE ENGINEER

Carrie Lavallee, P.E. — Carrie Lavallee, P.E. 2025.09.02 12:16:00 -04'00'
CHIEF ENGINEER

BR1(E10011)KEYPLAN PROF_RECOVER.DWG Plotted on 18-Aug-2025 4:29 PM
2-MAY-2025
PSE DESIGN SUBMISSION REV. 1

GENERAL NOTES

DESIGN:

IN ACCORDANCE WITH THE AMERICAN ASSOCIATION OF STATE HIGHWAY AND TRANSPORTATION OFFICIALS LRFD BRIDGE DESIGN SPECIFICATIONS, 9TH EDITION, 2020, FOR HL-93 LOADING WITH CURRENT INTERIM SPECIFICATIONS THROUGH 2024.

MASSDOT BENCHMARK:

BENCHMARK A – MAG NAIL 2' UP IN UTILITY POLE (UPL2), EL. 497.09

BENCHMARK B – MAG NAIL 2' UP IN UTILITY POLE (UPL7), EL. 490.47

BENCHMARK C – MAG NAIL 2' UP IN UTILITY POLE (UPL11), EL. 499.55

ELEVATIONS ARE BASED ON THE NORTH AMERICAN VERTICAL DATUM (NAVD) OF 1988, UNLESS NOTED OTHERWISE.

DATE:

TO BE PLACED ON THE INSIDE FACE OF THE NORTHWEST AND SOUTHEAST HIGHWAY GUARDRAIL TRANSITIONS. A SHEET SHOWING SIZE AND CHARACTER OF NUMERALS WILL BE FURNISHED. THE DATE USED SHALL BE THE LATEST YEAR OF CONTRACT COMPLETION AS OF THE DATE THE FIRST HIGHWAY GUARDRAIL TRANSITION IS CONSTRUCTED. BOTH HIGHWAY GUARDRAIL TRANSITIONS SHALL FEATURE THE SAME DATE. SEE SHEETS 12 AND 13 FOR DETAILS.

MASSDOT SURVEY NOTEBOOKS:

ELECTRONIC SURVEY BY GREEN INTERNATIONAL. WETLAND FLAGGING WAS PERFORMED BY WESTON & SAMPSON IN APRIL 2021. COPIES OF SURVEY FILES MAY OBTAINED FROM MASSDOT.

SCALES:

SCALES NOTED ON THE PLANS ARE NOT APPLICABLE TO REDUCED SIZE PRINTS. DIVIDE SCALES BY 2 FOR HALF-SIZE PRINTS (A3).

FOUNDATIONS:

FOUNDATIONS MAY BE ALTERED, IF NECESSARY, TO SUIT CONDITIONS ENCOUNTERED DURING CONSTRUCTION, WITH APPROVAL OF THE ENGINEER.

UNSUITABLE MATERIAL:

ALL UNSUITABLE MATERIAL SHALL BE REMOVED WITHIN THE LIMITS OF THE FOUNDATIONS OF THE STRUCTURE, AS DIRECTED BY THE ENGINEER.

ANCHOR BOLTS:

ALL ANCHOR BOLTS SHALL BE SET BY TEMPLATE BEFORE THE CONCRETE IS PLACED.

CONCRETE MIX:

THE CEMENT CONCRETE SPECIFIED BELOW SHALL BE USED ON THE FOLLOWING BRIDGE COMPONENTS:

5000 PSI, $\frac{3}{8}$", 710 HP CEMENT CONCRETE.....CONCRETE SLOPE, REPAIR CONCRETE

5000 PSI, $\frac{3}{4}$" 685 HP CEMENT CONCRETE.....CONCRETE TOPPING SLAB, SIDEWALK, SAFETY CURB AND PRECAST HIGHWAY GUARDRAIL TRANSITIONS, ABUTMENT FOOTINGS

ALL CIP COMPONENTS AND PRECAST CONCRETE POURS SHOWN ON THESE CONSTRUCTION DRAWINGS WHERE ALL VOLUMETRIC DIMENSIONS ARE 4 FT OR GREATER, SHALL BE CONSIDERED TO BE MASS CONCRETE PLACEMENTS AND SHALL REQUIRE A HEAT OF HYDRATION ANALYSIS AND THERMAL CONTROL PLAN, AS SPECIFIED IN THE MASSDOT STANDARD SPECIFICATIONS.

REINFORCEMENT:

REINFORCING STEEL SHALL CONFORM TO THE REQUIREMENTS OF AASHTO M31 GRADE 60. UNLESS OTHERWISE NOTED ON THE CONSTRUCTION DRAWINGS, ALL BARS SHALL BE LAPPED AS FOLLOWS:

MODIFICATION CONDITION	#4 BARS	#5 BARS	#6 BARS
1. NONE	16"	17"	21"
2. 12" OF CONCRETE BELOW BAR	18"	22"	27"
3. EPOXY COATED BARS, COVER < $3d_b$, OR CLEAR SPACING < $6d_b$	21"	26"	31"
4. COATED BARS, ALL OTHER CASES	17"	21"	25"
5. CONDITION 2. AND 3.	23"	29"	35"
6. CONDITION 2. AND 4.	21"	27"	32"

ALL OTHER BARS SHALL BE LAPPED AS SHOWN ON THE CONSTRUCTION DRAWINGS.

EPOXY COATED BARS:

REINFORCING PROTECTION PER ELEMENT SHALL BE AS FOLLOWS:

EPOXY COATED BARS: SIDEWALK, SAFETY CURB, TOPPING SLAB, PRECAST 3-SIDED FRAME, PRECAST PILE CAP, PRECAST FOOTING.

MEMBRANE WATERPROOFING:

ALL MEMBRANE WATERPROOFING USED ON BRIDGE DECKS SHALL BE MEMBRANE WATERPROOFING FOR BRIDGE DECKS – SPRAY APPLIED.

EXISTING CONDITIONS:

ALL DIMENSIONS AND DETAILS SHOWN FOR THE EXISTING STRUCTURE ARE BASED UPON THE ORIGINAL BRIDGE PLANS AND ARE NOT GUARANTEED. THE CONTRACTOR SHALL DETERMINE AND ESTABLISH ALL DIMENSIONS AND DETAILS NECESSARY FOR COMPLETION OF ALL WORK BY FIELD MEASUREMENT AND SURVEY. THE CONTRACTOR SHALL BE RESPONSIBLE FOR THE ADEQUACY AND ACCURACY THEREOF AND NOT ORDER ANY MATERIAL OR COMMENCE ANY FABRICATION UNTIL THEY HAVE MADE THE REQUIRED MEASUREMENTS ON THE ACTUAL STRUCTURE AND THE EXTENT OF THE PROPOSED WORK HAS BEEN APPROVED BY THE ENGINEER.

THE OBSERVED WATER ELEVATION SHOWN ON THE PLANS WAS MEASURED ON THE DATES OF THE SURVEY AND DOES NOT NECESSARILY REPRESENT THE WATER LEVEL AT THE TIME OF CONSTRUCTION. IT IS THE CONTRACTORS RESPONSIBILITY TO VERIFY THE WATER LEVELS. PARTICULAR ATTENTION SHOULD BE GIVEN TO UPSTREAM OR DOWNSTREAM FACILITIES AND CONTROL STRUCTURES WHICH MAY ADVERSELY AFFECT THE WATER LEVELS WITHIN THE WATER BODY WHICH MASSDOT HAS NO CONTROL OVER. THERE WILL BE NO ADDITIONAL COMPENSATION FOR WORK INVOLVING VARYING WATER LEVELS OR THOSE THAT DIFFER FROM THE INFORMATION RECORDED ON THE PLANS.

UTILITIES:

LOCATIONS OF EXISTING UTILITIES SHOWN ARE APPROXIMATE. THE CONTRACTOR SHALL LOCATE AND PROTECT FROM DAMAGE ALL EXISTING UTILITIES. THE CONTRACTOR SHALL COORDINATE AND COOPERATE WITH THE RESPECTIVE UTILITY OWNERS FOR ALL UTILITIES THAT ARE TO BE TEMPORARILY OR PERMANENTLY RELOCATED FOR BRIDGE REPLACEMENT WORK.

TRAFFIC:

THE BRIDGE WILL BE CLOSED TO ALL TRAFFIC DURING ALL PHASES OF DEMOLITION AND CONSTRUCTION. TRAFFIC WILL BE CONTROLLED AS SHOWN IN THE TRAFFIC MANAGEMENT PLANS.

PRECAST CONCRETE THREE-SIDED FRAME:

1. THE THREE-SIDED FRAME SHALL BE CONTRACTOR DESIGNED.
2. THE SECTION IS AN THREE-SIDED FRAME SECTION TO BE MONOLITHICALLY CAST OF REINFORCED CONCRETE. THE INSIDE SURFACES SHALL BE SMOOTH AS TO NOT RESTRICT FLOW.
3. THE INTERNAL DIMENSIONS OF 32 FEET WIDE (SPAN) BY 9.07 FEET HEIGHT HIGH AND WALLS A MINIMUM OF 16 INCHES.
4. DESIGN CRITERIA
   - 4.1. DESIGN SHALL BE IN ACCORDANCE WITH THE AMERICAN ASSOCIATION OF STATE HIGHWAY AND TRANSPORTATION OFFICIALS (AASHTO) LRFD BRIDGE SPECIFICATIONS 9TH EDITION SUPPLEMENTED BY MASSACHUSETTS DEPARTMENT OF TRANSPORTATION BRIDGE DESIGN MANUAL (2024).
   - 4.2. STEEL REINFORCEMENT SHALL BE GRADE 60 CONFORMING TO AASHTO M31.
   - 4.3. MINIMUM 5000 PSI CONCRETE.
   - 4.4. CONCRETE COVER FOR COATED BARS SHALL BE 2 INCHES (MINIMUM).

SUGGESTED CONSTRUCTION SEQUENCE:

1. INSTALL EROSION CONTROLS.
2. CLEAR AND GRUB, REMOVE TREES, AND INSTALL TREE PROTECTION AS INDICATED.
3. TEMPORARILY RELOCATE OVERHEAD UTILITIES TO THE NORTH AND EAST SIDES OF THE EXISTING BRIDGE.
4. INSTALL THE DETOUR SIGNAGE AND CLOSE THE ROAD AND BRIDGE.
5. INSTALL TEMPORARY PROTECTIVE SHIELDING FOR BRIDGE DEMOLITION.
6. DEMOLISH AND REMOVE EXISTING BRIDGE SUPERSTRUCTURE AND BRIDGE RAIL.
7. INSTALL PROPOSED SANITARY SEWER ON THE SOUTH SIDE OF EXISTING BRIDGE.
8. INSTALL SUPPORT OF EXCAVATION ON THE SOUTH SIDE OF THE EXISTING BRIDGE.
9. EXCAVATE AS REQUIRED AROUND THE EXISTING CONCRETE SOUTH ABUTMENT AND WALLS.
10. DEMOLISH AND REMOVE THE REQUIRED LIMITS FOR THE EXISTING CONCRETE SOUTH ABUTMENT AND WALLS.
11. PREPARE SUBGRADE AND INSTALL DRILLED MICROPILES ON THE SOUTH SIDE OF THE BRIDGE.
12. INSTALL CAST-IN-PLACE CONCRETE PILE CAP ON THE SOUTH SIDE OF THE PROPOSED BRIDGE.
13. INSTALL SUPPORT OF EXCAVATION ON THE NORTH SIDE OF THE EXISTING BRIDGE.
14. EXCAVATE AS REQUIRED AROUND THE EXISTING CONCRETE NORTH ABUTMENT AND WALLS.
15. DEMOLISH AND REMOVE THE REQUIRED LIMITS FOR THE EXISTING CONCRETE NORTH ABUTMENT AND WALLS.
16. PREPARE SUBGRADE AND INSTALL PRECAST CONCRETE FOOTING.
17. PLACE PRECAST CONCRETE THREE-SIDED FRAME ON PRECAST SUBSTRUCTURES.
18. BACKFILL PRECAST CONCRETE THREE-SIDED FRAME AND REMOVE SUPPORT OF EXCAVATION.
    NOTE: CONTRACTOR MAY CONSTRUCT BOTH SUBSTRUCTURES AT THE SAME TIME.
19. INSTALL REINFORCING AND CONSTRUCT CAST-IN-PLACE CONCRETE TOPPING SLAB, CURB AND SIDEWALK.
20. INSTALL PRECAST HIGHWAY GUARDRAIL TRANSITIONS.
21. PERFORM FULL-DEPTH ROADWAY RECONSTRUCTION, GRADING AND ESTABLISH VEGETATION ON NORTH AND SOUTH SIDES OF THE BRIDGE.
22. INSTALL SPRAY-APPLIED MEMBRANE WATERPROOFING AND PAVE PROTECTIVE COURSE ON DECK.
23. PLACE HMA BASE COURSE, INSTALL GUARDRAIL, PAVE WEARING COURSE, COMPLETE LINE STRIPING AND S3MTL4 BRIDGE RAILING.
24. REMOVE EROSION CONTROLS AND DETOUR SIGNAGE AND OPEN ROADWAY AND BRIDGE TO TRAFFIC.

ERVING
CHURCH STREET

STATE	FED. AID PROJ. NO.	SHEET NO.	TOTAL SHEETS
MA	NHP(BNNHS)-0032(050)X	15	33
PROJECT FILE NO.	612982		

GENERAL NOTES

TRAFFIC DATA	ROADWAY OVER	ROADWAY UNDER
DESIGN YEAR	2031	N/A
AVERAGE DAILY TRAFFIC – PRESENT	1113	N/A
AVERAGE DAILY TRAFFIC – DESIGN YEAR	1247	N/A
DESIGN HOURLY VOLUME	145	N/A
DIRECTIONAL DISTRIBUTION	51%	N/A
TRUCK PERCENTAGE – AVERAGE DAY	3.8%	N/A
TRUCK PERCENTAGE – PEAK HOUR	8.6%	N/A
DESIGN SPEED	25 MPH	N/A
DIRECTIONAL DESIGN HOURLY VOLUME	74	N/A

SEISMIC DESIGN CRITERIA	
DESIGN RETURN PERIOD:	1000 YRS
DESIGN SPECTRA	
As	0.072g
SDs	0.162g
SD1	0.070g
SITE CLASS	C
SEISMIC DESIGN CATEGORY (SDC)	A

HYDRAULIC DESIGN DATA	
DRAINAGE AREA (SQ. MILES)	7.1
DESIGN FLOOD DISCHARGE (C.F.S.)	851
DESIGN FLOOD FREQUENCY (YEARS)	25
DESIGN FLOOD VELOCITY (F.P.S.)	11.12
DESIGN FLOOD ELEVATION (FEET, NAVD)	488.62
BASE (100-YEAR) FLOOD DATA	
BASE FLOOD DISCHARGE (C.F.S.)	1260
BASE FLOOD ELEVATION (FEET, NAVD)	489.77
DESIGN AND CHECK SCOUR DATA	
DESIGN SCOUR FLOOD EVENT RETURN FREQUENCY (YEARS)	50
DESIGN FLOOD ABUTMENT SCOUR DEPTH (FEET)	3.64
DESIGN FLOOD PIER SCOUR DEPTH (FEET)	N/A
CHECK SCOUR FLOOD EVENT RETURN FREQUENCY (YEARS)	100
CHECK FLOOD ABUTMENT SCOUR DEPTH (FEET)	4.32
CHECK FLOOD PIER SCOUR DEPTH (FEET)	N/A
FLOOD OF RECORD	
DISCHARGE (C.F.S.)	N/A
FREQUENCY (IF KNOWN, YEARS)	N/A
MAXIMUM ELEVATION (FEET, NAVD)	N/A
DATE (MM/YYYY)	N/A
HISTORY OF ICE FLOES	N/A
EVIDENCE OF SCOUR AND EROSION	N/A

TEMPORARY WATER CONTROL DESIGN DATA	
DESIGN FLOOD DISCHARGE (C.F.S.)	277
DESIGN FLOOD FREQUENCY (YEARS)	2
DESIGN FLOOD VELOCITY (F.P.S.)	10.17
DESIGN FLOOD ELEVATION (FEET, NAVD)	489.48

DATE	DESCRIPTION
9/6/2025	ISSUED FOR CONSTRUCTION

THIS SHEET IS APPROVED FOR CONSTRUCTION BY MASSDOT
AUTHORIZED SIGNATORY: STATE BRIDGE ENGINEER
USE ONLY PRINTS OF LATEST DATE

BR2(E10011) GENNOTES.DWG Plotted on 18-Aug-2025 4:32 PM
2-MAY-2025
PSE DESIGN SUBMISSION REV. 1

BORING BB–101

NORTHING: N3045839±
EASTING: E413941±
GROUND ELEVATION: 494.0±

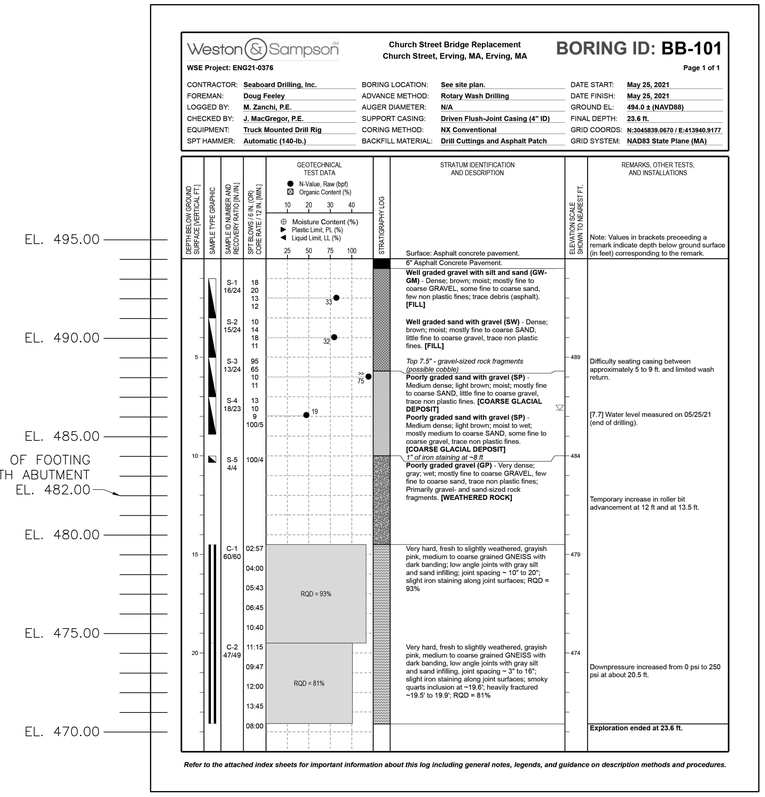

Weston & Sampson

Church Street Bridge Replacement
Church Street, Erving, MA, Erving, MA

BORING ID: BB-101

WSE Project: ENG21-0376 — Page 1 of 1

CONTRACTOR:	Seaboard Drilling, Inc.	BORING LOCATION:	See site plan.	DATE START:	May 25, 2021
FOREMAN:	Doug Feeley	ADVANCE METHOD:	Rotary Wash Drilling	DATE FINISH:	May 25, 2021
LOGGED BY:	M. Zanchi, P.E.	AUGER DIAMETER:	N/A	GROUND EL:	494.0 ± (NAVD88)
CHECKED BY:	J. MacGregor, P.E.	SUPPORT CASING:	Driven Flush-Joint Casing (4" ID)	FINAL DEPTH:	23.6 ft.
EQUIPMENT:	Truck Mounted Drill Rig	CORING METHOD:	NX Conventional	GRID COORDS:	N:3045839.0670 / E:413940.9177
SPT HAMMER:	Automatic (140-lb.)	BACKFILL MATERIAL:	Drill Cuttings and Asphalt Patch	GRID SYSTEM:	NAD83 State Plane (MA)

Note: Values in brackets preceeding a remark indicate depth below ground surface (in feet) corresponding to the remark.

Sample	Blows	Recovery	Stratum / Remarks
			Surface: Asphalt concrete pavement.
			6" Asphalt Concrete Pavement.
S-1	18 20 13 12	16/24	**Well graded gravel with silt and sand (GW-GM)** - Dense; brown; moist; mostly fine to coarse GRAVEL, some fine to coarse sand, few non plastic fines; trace debris (asphalt). **[FILL]**
S-2	10 14 18 11	15/24	**Well graded sand with gravel (SW)** - Dense; brown; moist; mostly fine to coarse SAND, little fine to coarse gravel, trace non plastic fines. **[FILL]**
S-3	95 65 10 11	13/24	*Top 7.5" - gravel-sized rock fragments (possible cobble)* — Difficulty seating casing between approximately 5 to 9 ft. and limited wash return. **Poorly graded sand with gravel (SP)** - Medium dense; light brown; moist; mostly fine to coarse SAND, little fine to coarse gravel, trace non plastic fines. **[COARSE GLACIAL DEPOSIT]**
S-4	13 10 9 100/5	18/23	[7.7] Water level measured on 05/25/21 (end of drilling). **Poorly graded sand with gravel (SP)** - Medium dense; light brown; moist to wet; mostly medium to coarse SAND, some fine to coarse gravel, trace non plastic fines. **[COARSE GLACIAL DEPOSIT]** *1" of iron staining at ~8 ft*
S-5	100/4	4/4	**Poorly graded gravel (GP)** - Very dense; gray; wet; mostly fine to coarse GRAVEL, few fine to coarse sand, trace non plastic fines; Primarily gravel- and sand-sized rock fragments. **[WEATHERED ROCK]** — Temporary increase in roller bit advancement at 12 ft and at 13.5 ft.
C-1	02:57 04:00 05:43 06:45 10:40	60/60	RQD = 93% — Very hard, fresh to slightly weathered, grayish pink, medium to coarse grained GNEISS with dark banding; low angle joints with gray silt and sand infilling; joint spacing ~ 10" to 20"; slight iron staining along joint surfaces; RQD = 93%
C-2	11:15 09:47 12:00 13:45 08:00	47/49	RQD = 81% — Very hard, fresh to slightly weathered, grayish pink, medium to coarse grained GNEISS with dark banding, low angle joints with gray silt and sand infilling, joint spacing ~ 3" to 16"; slight iron staining along joint surfaces; smoky quartz inclusion at ~19.6'; heavily fractured ~19.5' to 19.9'; RQD = 81% — Downpressure increased from 0 psi to 250 psi at about 20.5 ft.

Exploration ended at 23.6 ft.

Refer to the attached index sheets for important information about this log including general notes, legends, and guidance on description methods and procedures.

BORING BB–1

NORTHING: N3045827.9954
EASTING: E413930.1248
GROUND ELEVATION: 494.0±

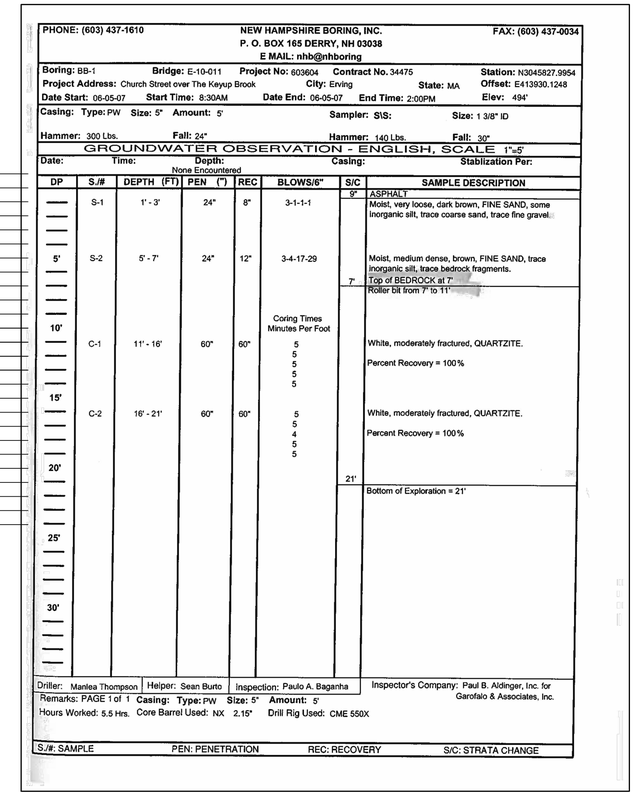

PHONE: (603) 437-1610 — NEW HAMPSHIRE BORING, INC. — FAX: (603) 437-0034
P. O. BOX 165 DERRY, NH 03038
E MAIL: nhb@nhboring

Boring: BB-1 Bridge: E-10-011 Project No: 603604 Contract No. 34475 Station: N3045827.9954
Project Address: Church Street over The Keyup Brook City: Erving State: MA Offset: E413930.1248
Date Start: 06-05-07 Start Time: 8:30AM Date End: 06-05-07 End Time: 2:00PM Elev: 494'
Casing: Type: PW Size: 5" Amount: 5' Sampler: S\S: Size: 1 3/8" ID
Hammer: 300 Lbs. Fall: 24" Hammer: 140 Lbs. Fall: 30"

GROUNDWATER OBSERVATION - ENGLISH, SCALE 1"=5'
Date: Time: Depth: None Encountered Casing: Stablization Per:

DP	S.#	DEPTH (FT)	PEN (")	REC	BLOWS/6"	S/C	SAMPLE DESCRIPTION
						9"	ASPHALT
	S-1	1' - 3'	24"	8"	3-1-1-1		Moist, very loose, dark brown, FINE SAND, some inorganic silt, trace coarse sand, trace fine gravel.
5'	S-2	5' - 7'	24"	12"	3-4-17-29		Moist, medium dense, brown, FINE SAND, trace inorganic silt, trace bedrock fragments.
						7'	Top of BEDROCK at 7'
							Roller bit from 7' to 11'
10'					Coring Times Minutes Per Foot		
	C-1	11' - 16'	60"	60"	5 5 5 5 5		White, moderately fractured, QUARTZITE. Percent Recovery = 100%
15'							
	C-2	16' - 21'	60"	60"	5 5 4 5 5		White, moderately fractured, QUARTZITE. Percent Recovery = 100%
20'							
						21'	Bottom of Exploration = 21'
25'							
30'							

Driller: Manlea Thompson | Helper: Sean Burto | Inspection: Paulo A. Baganha | Inspector's Company: Paul B. Aldinger, Inc. for Garofalo & Associates, Inc.
Remarks: PAGE 1 of 1 Casing: Type: PW Size: 5" Amount: 5'
Hours Worked: 5.5 Hrs. Core Barrel Used: NX 2.15" Drill Rig Used: CME 550X

S.#: SAMPLE PEN: PENETRATION REC: RECOVERY S/C: STRATA CHANGE

BORING NOTES:

1. LOCATION OF BORINGS ARE SHOWN ON THE PLAN THUS: BB-#
2. BORINGS ARE TAKEN FOR THE PURPOSE OF DESIGN AND SHOW CONDITIONS AT BORING POINTS ONLY, BUT DO NOT NECESSARILY SHOW THE NATURE OF THE MATERIALS TO BE ENCOUNTERED DURING CONSTRUCTION.
3. WATER LEVELS SHOWN ON THE BORING LOGS WERE OBSERVED AT THE TIME OF TAKING BORINGS AND DO NOT NECESSARILY SHOW THE TRUE GROUND WATER LEVEL.
4. FIGURES IN COLUMNS INDICATE NUMBER OF BLOWS REQUIRED TO DRIVE A 1 3/8" I.D. SPLIT SPOON SAMPLER 6" USING A 140 POUND WEIGHT FALLING 30".
5. BORING SAMPLES ARE STORED AT A STORAGE FACILITY LOCATED ON ROUTE 114 (219 WINTHROP AVE) IN LAWRENCE, MA. THE CONTRACTOR MAY EXAMINE THE SOIL AND ROCK SAMPLES BY CONTACTING THE MASSDOT GEOTECHNICAL SECTION AT 10 PARK PLAZA, BOSTON, MA.
6. BORINGS BB–101 AND BB–102 WERE MADE IN MAY 2021 AND BORINGS BB–1 AND BB–2 WERE MADE IN JUNE 2007.
7. BORINGS BB–101 AND BB–102 WERE MADE BY SEABOARD DRILLING INC. AT 649 MEADOW STREET, CHICOPEE, MA. 01013. BORINGS BB–1 AND BB–2 WERE MADE BY NEW HAMPSHIRE BORING INC., P.O. BOX 165, DERBY, NH. 03038.
8. THE NORTH AMERICAN VERTICAL DATUM (NAVD) OF 1988 IS USED THROUGHOUT.

9/6/2025	ISSUED FOR CONSTRUCTION
DATE	DESCRIPTION

THIS SHEET IS APPROVED FOR CONSTRUCTION BY MASSDOT
AUTHORIZED SIGNATORY: STATE BRIDGE ENGINEER
USE ONLY PRINTS OF LATEST DATE

BR3-4(E10011) BOR.DWG Plotted on 18-Aug-2025 4:38 PM
PSE DESIGN SUBMISSION REV. 1 2-MAY-2025

BORING BB–102

NORTHING: N3045752±
EASTING: E413974±
GROUND ELEVATION: 491.0±

Weston & Sampson

Church Street Bridge Replacement
Church Street, Erving, MA, Erving, MA

BORING ID: BB-102

WSE Project: ENG21-0376

Page 1 of 1

CONTRACTOR:	Seaboard Drilling, Inc.	BORING LOCATION:	See site plan.	DATE START:	May 25, 2021
FOREMAN:	Doug Feeley	ADVANCE METHOD:	Hollow-Stem Auger Drilling	DATE FINISH:	May 25, 2021
LOGGED BY:	M. Zanchi, P.E.	AUGER DIAMETER:	4-1/4" ID (Stem), 7-5/8" OD (Flights)	GROUND EL:	491.0 ± (NAVD88)
CHECKED BY:	J. MacGregor, P.E.	SUPPORT CASING:	N/A	FINAL DEPTH:	19.2 ft. (Refusal)
EQUIPMENT:	Truck Mounted Drill Rig	CORING METHOD:	N/A	GRID COORDS:	N:3045752.1781 / E:413974.4017
SPT HAMMER:	Automatic (140-lb.)	BACKFILL MATERIAL:	Drill Cuttings and Asphalt Patch	GRID SYSTEM:	NAD83 State Plane (MA)

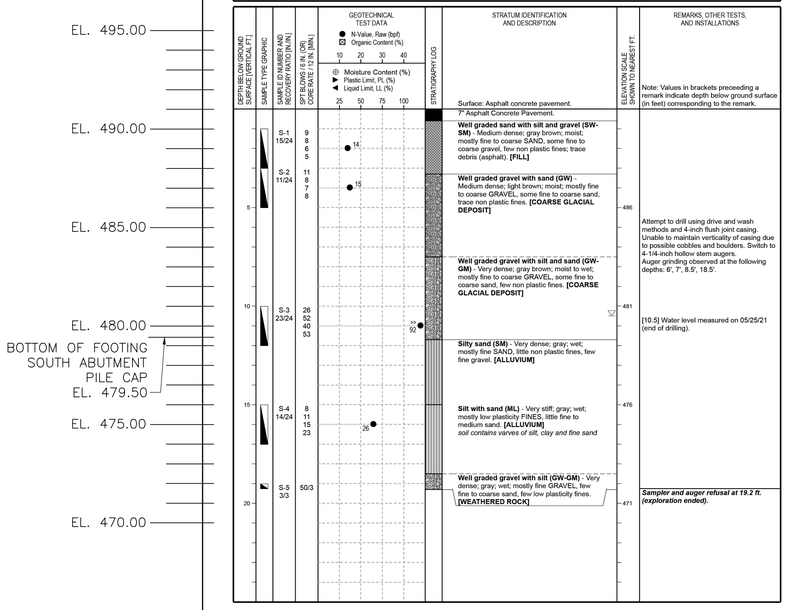

Refer to the attached index sheets for important information about this log including general notes, legends, and guidance on description methods and procedures.

BORING BB–2

NORTHING: N3045832.5152
EASTING: E413970.1482
GROUND ELEVATION: 493.0±

PHONE: (603) 437-1610 | NEW HAMPSHIRE BORING, INC. | FAX: (603) 437-0034
P. O. BOX 165 DERRY, NH 03038
E MAIL: nhb@nhboring

Boring: BB-2 Bridge: E-10-011 Project No: 603604 Contract No. 34475 Station: N3045832.5152
Project Address: Church Street over The Keyup Brook City: Erving State: MA Offset: E413970.1482
Date Start: 06-06-07 Start Time: 8:30AM Date End: 06-06-07 End Time: 4:30PM Elev: 493'

Casing: Type: PW Size: 5" Amount: 15' Sampler: S\S: Size: 1 3/8" ID
Type: HW Size: 4" Amount: 22'
Hammer: 300 Lbs. Fall: 24" Hammer: 140 Lbs. Fall: 30"

GROUNDWATER OBSERVATION - ENGLISH, SCALE 1"=5'

Date: 06-06-07 Time: 3:30PM Depth: 8.5' Casing: Stabilization Per:

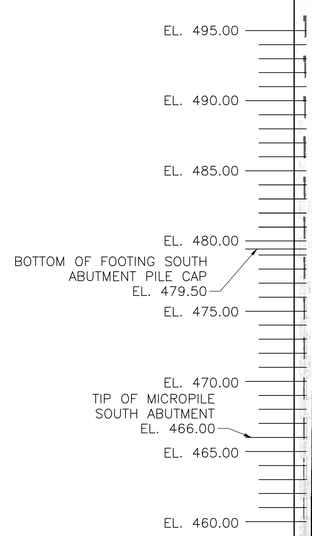

DP	S./#	DEPTH (FT)	PEN (")	REC	BLOWS/6"	S/C	SAMPLE DESCRIPTION
						8"	ASPHALT
	S-1	1' - 3'	24"	10"	9-17-30-25		Moist, dense, brown, FINE TO COARSE SAND, some inorganic silt, trace fine to medium gravel.
5'	S-2	5' - 7'	24"	8"	4-5-6-9		Moist, medium dense, brown, FINE SAND, some inorganic silt, trace fine to coarse gravel.
						10'	
10'	S-3	10' - 12'	24"	12"	15-19-18-25		Moist, dense, gray, FINE SAND, some inorganic silt.
15'	S-4	15' - 17'	24"	18"	14-18-21-26		Moist, dense, gray, FINE SAND, some inorganic silt.
						20'4"	Wet, very dense, gray, FINE SAND, some inorganic silt, trace weathered bedrock. Top of BEDROCK at 20'4"
20'	S-5	20' - 20'10"	10"	10"	20-100/4"		Rollerbit to 22', start coring at 22'.
	C-1	22' - 27'	60"	57"	Coring Times Minutes Per Foot 3 3 4 4 4		Pinkish white, moderately fractured, QUARTZITE Percent Recovery = 95%
25'							
	C-2	27' - 32'	60"	57"	4 4 4 4 4		Pinkish white, moderately fractured, QUARTZITE Percent Recovery = 95%
30'							
						32'	Bottom of Exploration = 32'

Driller: Manlea Thompson | Helper: Sean Burto | Inspection: Paulo A. Baganha | Inspector's Company: Paul B. Aldinger, Inc. for Garofalo & Associates, Inc.

Remarks: PAGE 1 of 1 Casing: Type: PW Size: 5" Amount: 15' Core Barrel Used: NX 2.15"
Hours Worked: 8 Hrs. Type: HW Size: 4" Amount: 22' Drill Rig Used: CME 550X

Changed location - Moved from N3045835.5152, E413970.1482 to N3045832.5152, E413970.1482 due to a boulder being directly beneath the asphalt at the original location.

S./#: SAMPLE PEN: PENETRATION REC: RECOVERY S/C: STRATA CHANGE

BORING NOTES:

1. FOR ADDITIONAL BORING NOTES, SEE SHEET 3.

9/6/2025	ISSUED FOR CONSTRUCTION
DATE	DESCRIPTION

THIS SHEET IS APPROVED FOR CONSTRUCTION BY MASSDOT
AUTHORIZED SIGNATORY: STATE BRIDGE ENGINEER
USE ONLY PRINTS OF LATEST DATE

BR3-4(E10011) BOR.DWG Plotted on 18-Aug-2025 4:39 PM
PSE DESIGN SUBMISSION REV. 1 2-MAY-2025

ERVING
CHURCH STREET

STATE	FED. AID PROJ. NO.	SHEET NO.	TOTAL SHEETS
MA	NHP(BNNHS)-0032(050)X	18	33
PROJECT FILE NO.	612982		

GENERAL PLAN AND ELEVATION

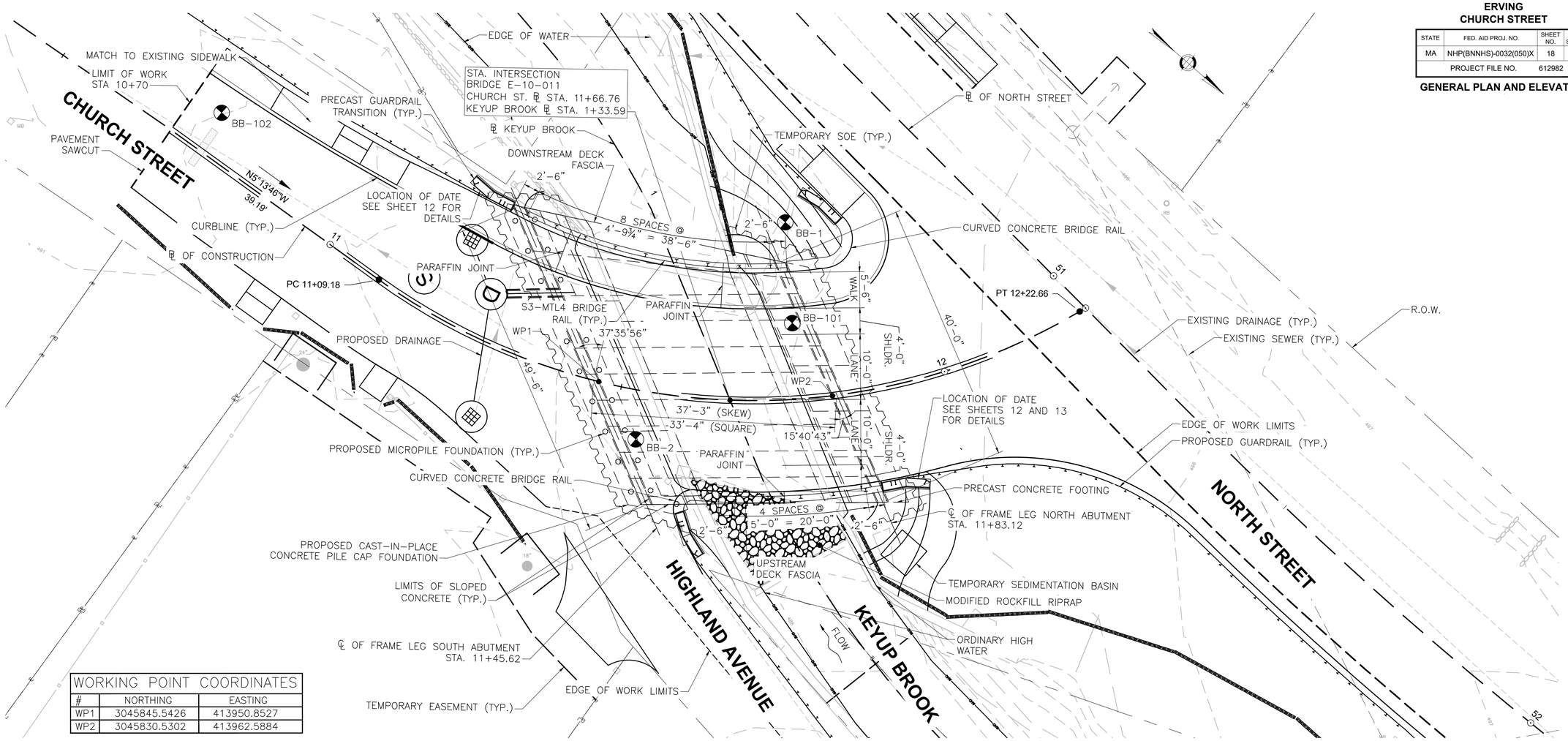

WORKING POINT COORDINATES		
#	NORTHING	EASTING
WP1	3045845.5426	413950.8527
WP2	3045830.5302	413962.5884

GENERAL PLAN

SCALE: ⅛" = 1'-0"

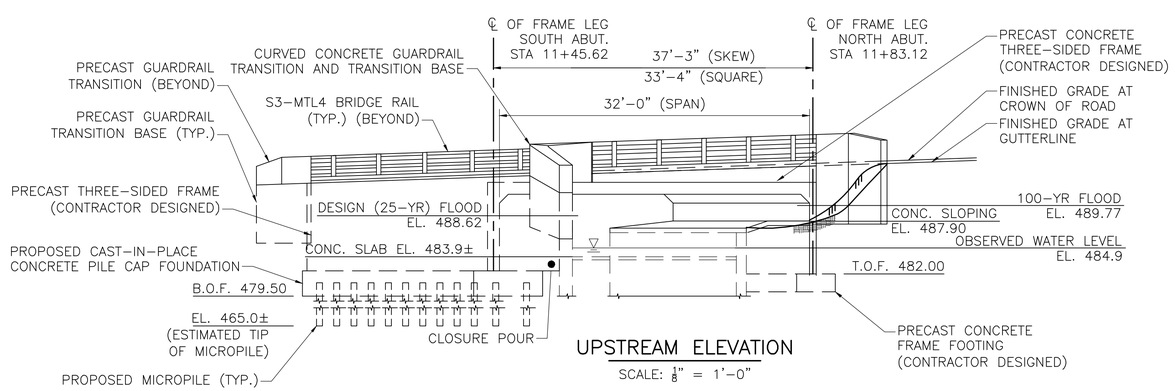

UPSTREAM ELEVATION

SCALE: ⅛" = 1'-0"

NOTE:

SOUTH APPROACH GRADING NOT SHOWN FOR CLARITY.

9/6/2025	ISSUED FOR CONSTRUCTION
DATE	DESCRIPTION

THIS SHEET IS APPROVED FOR CONSTRUCTION BY MASSDOT AUTHORIZED SIGNATORY: STATE BRIDGE ENGINEER

USE ONLY PRINTS OF LATEST DATE

BRS(E10011) GENPLAN_RECOVER.DWG Plotted on 18-Aug-2025 4:43 PM
2-MAY-2025
PSE DESIGN SUBMISSION REV. 1

WORKING POINT COORDINATES		
#	NORTHING	EASTING
WP3	3045845.5426	413950.8527
WP4	3045830.5302	413962.5884
WP5	3045861.8096	413958.8678
WP6	3045848.0810	413971.0229
WP7	3045803.4282	413949.5149
WP8	3045822.7829	413938.7942

ERVING
CHURCH STREET

STATE	FED. AID PROJ. NO.	SHEET NO.	TOTAL SHEETS
MA	NHP(BNNHS)-0032(050)X	19	33
PROJECT FILE NO.	612982		

DEMOLITION PLAN

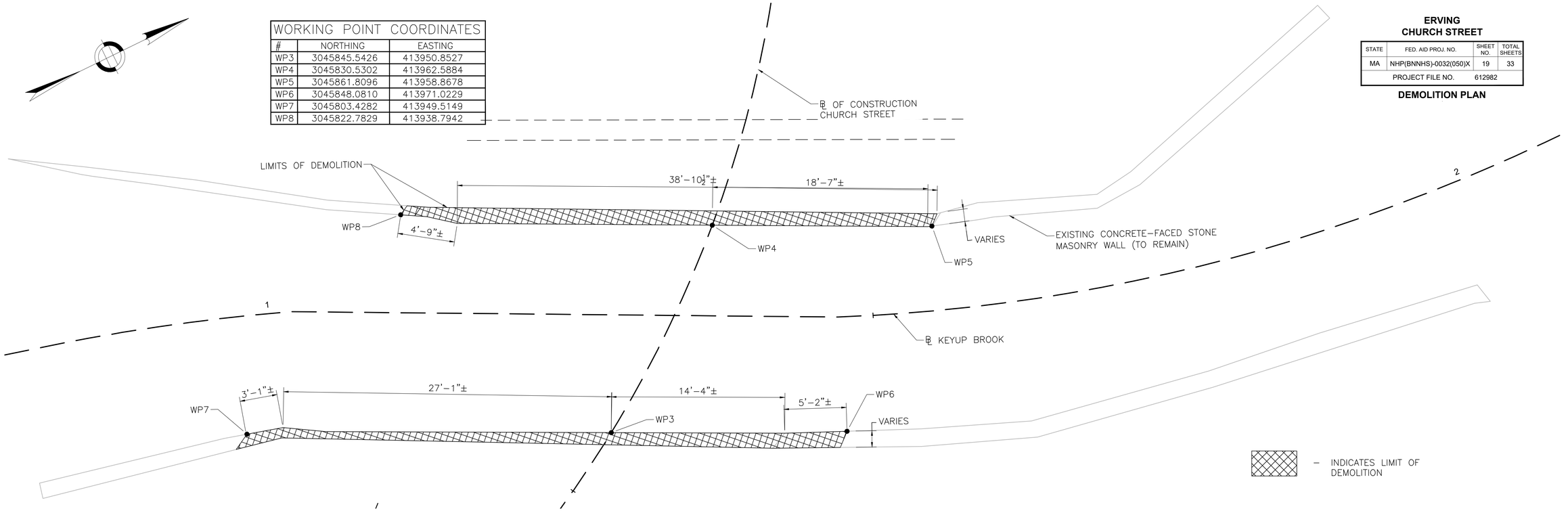

SUBSTRUCTURE DEMOLITION PLAN

SCALE: ¼" = 1'-0"

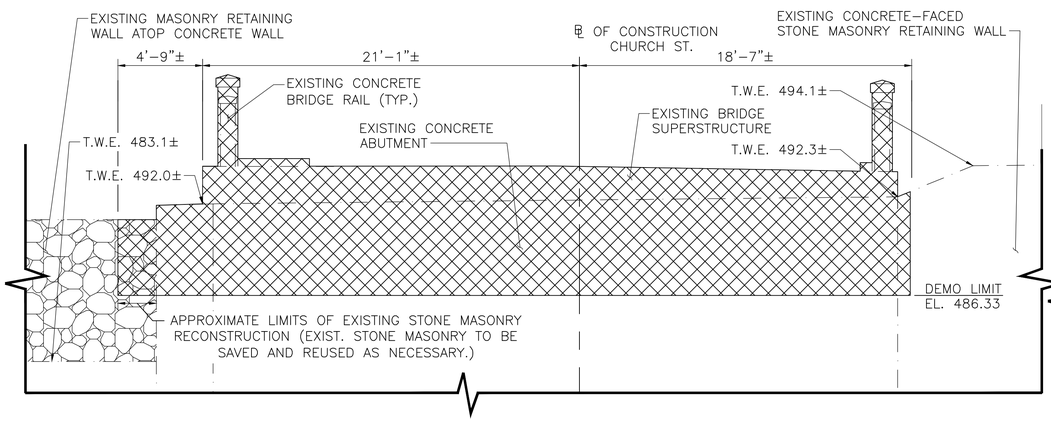

NORTH ABUTMENT DEMOLITION ELEVATION

SCALE: ¼" = 1'-0"

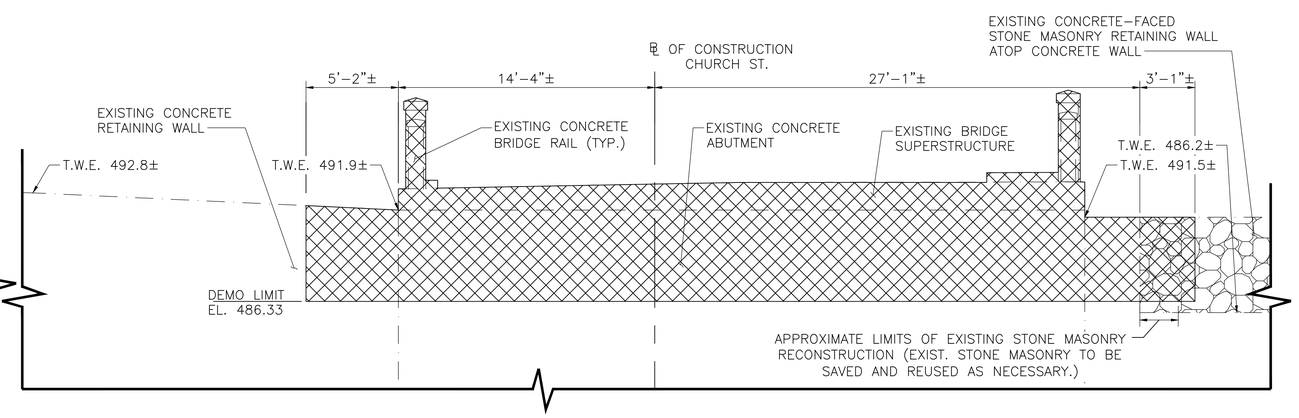

SOUTH ABUTMENT DEMOLITION ELEVATION

SCALE: ¼" = 1'-0"

DEMOLITION NOTES

1. ALL EXISTING SUBSTRUCTURE AND SUPERSTRUCTURE DIMENSIONS SHOWN ARE BASED ON LIMITED SURVEY AND AVAILABLE BRIDGE PLANS AND ARE NOT GUARANTEED. THE CONTRACTOR SHALL DETERMINE AND ESTABLISH ALL DIMENSIONS AND DETAILS NECESSARY FOR COMPLETION OF ALL WORK BY FIELD MEASUREMENT AND SURVEY. THE CONTRACTOR SHALL BE RESPONSIBLE FOR THE ADEQUACY AND ACCURACY THEREOF, AND SHALL NOT ORDER ANY MATERIAL OR COMMENCE FABRICATION UNTIL THEY HAVE MADE THE REQUIRED MEASUREMENTS AND THE EXTENT OF THE PROPOSED WORK HAS BEEN APPROVED BY THE ENGINEER.
2. THE PERIMETER OF ALL DEMOLITION AREAS OF EXISTING SUBSTRUCTURE CONCRETE SHALL HAVE A 6" (MIN.) DEEP SAWCUT, UNLESS NOTED OTHERWISE OR PERMITTED BY THE ENGINEER,, TO CONTROL DEMOLITION LIMITS, DAMAGE AND CRACKING OF THE UNREINFORCED CONCRETE DURING DEMOLITION.
3. AS SHOWN ON THE PLANS, THE CONTRACTOR IS RESPONSIBLE FOR PROPER DISPOSAL OF THE EXISTING SUPERSTRUCTURE OF BRIDGE NO. E-10-011 (OPW) AND ALL REMOVED SUBSTRUCTURE CONCRETE FROM THE EXISTING ABUTMENTS AND WINGWALLS.
4. TEMPORARY SUPPORT OF EXCAVATION IS REQUIRED DURING EXCAVATION, IT SHALL BE DESIGN BY THE CONTRACTOR AND SHALL BE PAID FOR UNDER ITEM 953.1 – TEMPORARY SUPPORT OF EXCAVATION.
5. TEMPORARY PROTECTIVE SHIELDING SHALL BE PAID FOR UNDER ITEM 115.1 – DEMOLITION OF BRIDGE NO. E-10-011 (CLV).

9/6/2025	ISSUED FOR CONSTRUCTION
DATE	DESCRIPTION

THIS SHEET IS APPROVED FOR CONSTRUCTION BY MASSDOT
AUTHORIZED SIGNATORY: STATE BRIDGE ENGINEER

USE ONLY PRINTS OF LATEST DATE

BR6(E10011)DEMOPLAN.DWG Plotted on 18-Aug-2025 4:45 PM
2-MAY-2025
PSE DESIGN SUBMISSION REV. 1

WORKING POINT COORDINATES		
#	NORTHING	EASTING
WP9	3045821.7053	413967.5805

ERVING
CHURCH STREET

STATE	FED. AID PROJ. NO.	SHEET NO.	TOTAL SHEETS
MA	NHP(BNNHS)-0032(050)X	20	33
PROJECT FILE NO.	612982		

PILE LAYOUT PLAN

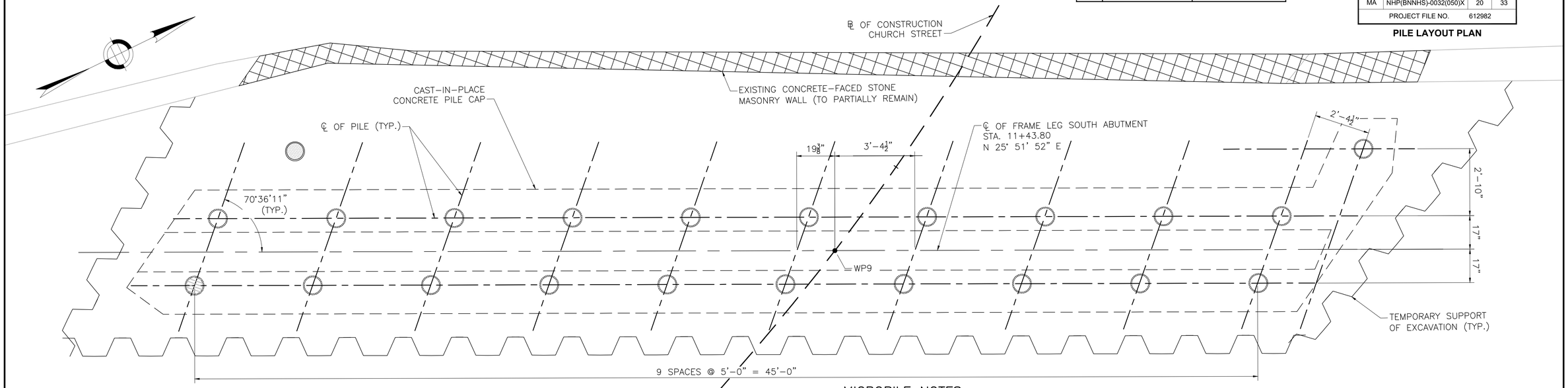

PILE LAYOUT PLAN

SCALE: ½" = 1'-0"

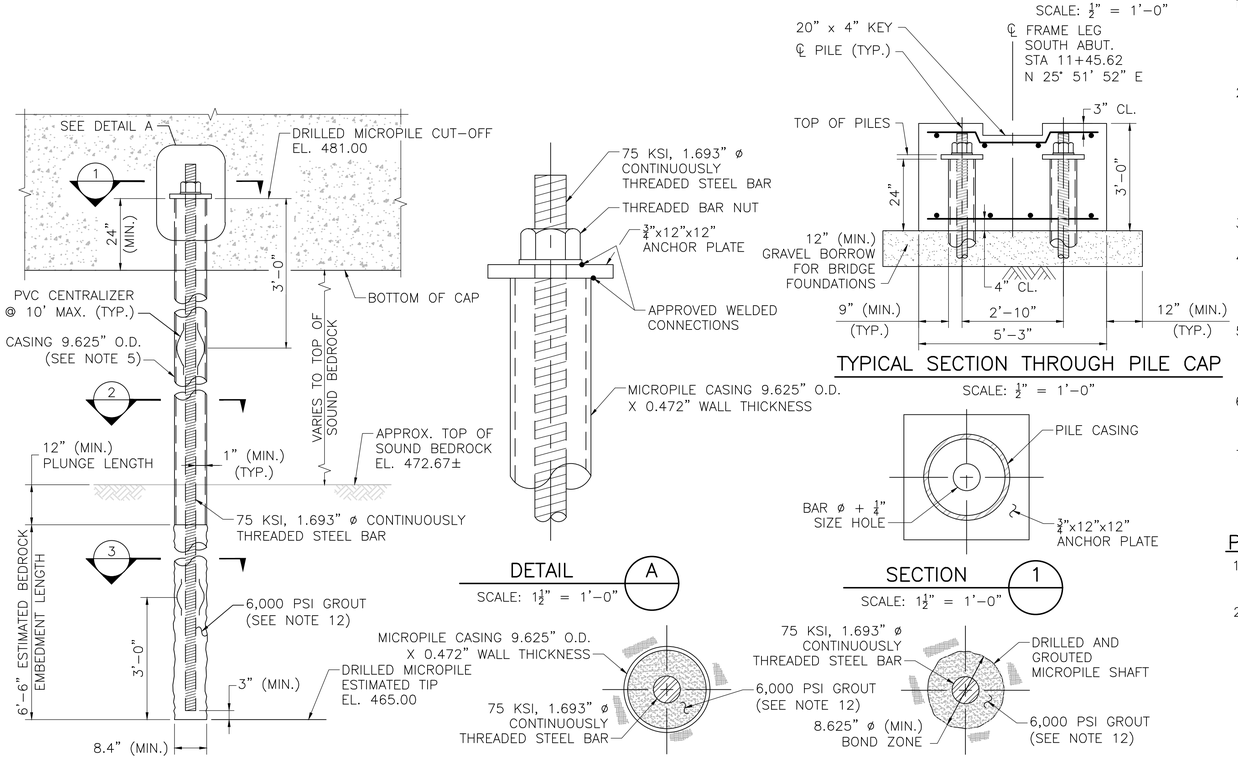

VERTICAL SECTION THROUGH PILE

SCALE: ½" = 1'-0"

TYPICAL SECTION THROUGH PILE CAP

SCALE: ½" = 1'-0"

DETAIL A

SCALE: 1½" = 1'-0"

SECTION 1

SCALE: 1½" = 1'-0"

(CASED ZONE)

SECTION 2

SCALE: 1½" = 1'-0"

(BONDED ZONE)

SECTION 3

SCALE: 1½" = 1'-0"

MICROPILE NOTES:

1. FACTORED AXIAL DESIGN LOAD PER MICROPILE PER AASHTO LRFD BRIDGE DESIGN SPECIFICATIONS.

   STRENGTH I LOAD COMBINATION
   FACTORED AXIAL DESIGN LOAD = 141.6 KIPS

2. THE FACTORED STRUCTURAL PILE RESISTANCE IS 280.4 KIPS AND IS THE PRODUCT OF THE NOMINAL STRUCTURAL RESISTANCE OF 373.9 KIPS AND A RESISTANCE FACTOR OF 0.75.

   THE FACTORED GEOTECHNICAL PILE RESISTANCE IS 20 KSF AND IS THE PRODUCT OF THE NOMINAL GEOTECHNICAL RESISTANCE OF 36.4 KSF AND A RESISTANCE FACTOR OF 0.55.

3. THE ESTIMATED TIP ELEVATION IS 465.00 FEET.

4. STEEL CASING SHALL BE PRIME STEEL AND MEET THE REQUIREMENTS OF API 5L PSL1 GRADE 52 WITH SR 15 SUPPLEMENTAL REQUIREMENTS.

5. THREADED STEEL BAR SHALL BE CONTINUOUSLY THREADED FOR THE ENTIRE BAR LENGTH CONFORMING TO AASHTO M31, HAVING A MINIMUM YIELD STRENGTH OF 75 KSI.

6. THREADED CASING JOINTS ARE NOT ALLOWED WITHIN 3'-0" OF THE PILE CAP.

7. NUT AND BAR COUPLING SHALL BE PROVIDED FROM THE SAME MANUFACTURER AS THE THREADED STEEL BAR.

8. BAR COUPLING SHALL BE FULLY ENGAGED ON THE THREADED STEEL BAR AND SHALL NOT BE LOCATED IN THE TOP THIRD OF THE MICROPILE LENGTH.

9. ANCHOR PLATE SHALL MEET THE REQUIREMENTS OF AASHTO M270 GRADE 50.

10. GROUT SHALL HAVE A MINIMUM 28-DAY COMPRESSIVE STRENGTH OF 6,000 PSI AND CEMENT SHALL CONFORM TO AASHTO M85 TYPE III OR IV.

11. GROUT SHALL BE PLACED USING TREMIE METHODS.

12. THE CONTRACTOR SHALL SUBMIT A MICROPILE SCHEDULE, MICROPILE INSTALLATION, AND MICROPILE TESTING PLAN FOR REVIEW AND APPROVAL BY THE ENGINEER.

13. SEE SPECIAL PROVISION ITEM 945.10 DRILLED MICROPILES, ITEM 948.60 MICROPILE VERIFICATION LOAD TEST, AND ITEM 948.61 MICROPILE PROOF LOAD TEST FOR ADDITIONAL MICROPILE SPECIFICATIONS.

14. THE CONTRACTOR MAY ELECT TO INSTALL A PRECAST CONCRETE PILE CAP IN LIEU OF CAST-IN-PLACE CONCRETE PILE CAP. THE CONTRACTOR MUST SUBMIT DESIGN AND INSTALLATION PLANS TO ENGINEER FOR APPROVAL.

PILE LAYOUT NOTES:

1. ALL MICROPILES, DEPICTED AS ○ , SHALL HAVE A 9.625" OUTSIDE CASING (0.472" WALL THICKNESS), NO. 14 REBAR CORE, AND SHALL BE DRILLED VERTICALLY.

2. HATCHED MICROPILES IN LAYOUT PLAN SHALL BE USED FOR LOAD TESTS. SEE LEGEND BELOW.

   ● MICROPILE VERIFICATION LOAD TEST* – TO BE PAID FOR UNDER ITEM 948.60

   ⊘ MICROPILE PROOF LOAD TEST** – TO BE PAID FOR UNDER ITEM 948.61

   *THE VERIFICATION LOAD TEST MICROPILE SHALL BE A SACRIFICIAL MICROPILE. THE VERIFICATION LOAD TEST SHALL BE PERFORMED PRIOR TO CONSTRUCTION OF PRODUCTION MICROPILES. THE LOCATION OF THE VERIFICATION LOAD TEST IS APPROXIMATE, AS SHOWN. CONTRACTOR TO SELECT EXACT LOCATION OF VERIFICATION LOAD TEST MICROPILE WITH APPROVAL BY THE ENGINEER.

   **CONTRACTOR MAY SELECT A DIFFERENT LOCATION FOR PROOF LOAD TESTS, WITH APPROVAL BY THE ENGINEER.

9/6/2025	ISSUED FOR CONSTRUCTION
DATE	DESCRIPTION
THIS SHEET IS APPROVED FOR CONSTRUCTION BY MASSDOT AUTHORIZED SIGNATORY:	STATE BRIDGE ENGINEER
USE ONLY PRINTS OF LATEST DATE	

BR7(E10011)PILEPLAN.DWG Plotted on 18-Aug-2025 4:47 PM
2-MAY-2025
PSE DESIGN SUBMISSION REV. 1

NOTES:

1. FACTORED BEARING PRESSURE = 11.41 KSF AS PER AASHTO LRFD BRIDGE DESIGN SPECIFICATIONS STRENGTH I LOAD COMBINATION. THE FACTORED BEARING RESISTANCE = 11.7 KSF. FACTORED BEARING RESISTANCE IS THE PRODUCT OF NOMINAL BEARING RESISTANCE AND A RESISTANCE FACTOR OF 0.45.

ERVING
CHURCH STREET

STATE	FED. AID PROJ. NO.	SHEET NO.	TOTAL SHEETS
MA	NHP(BNNHS)-0032(050)X	21	33
PROJECT FILE NO.	612982		

FOUNDATION PLAN

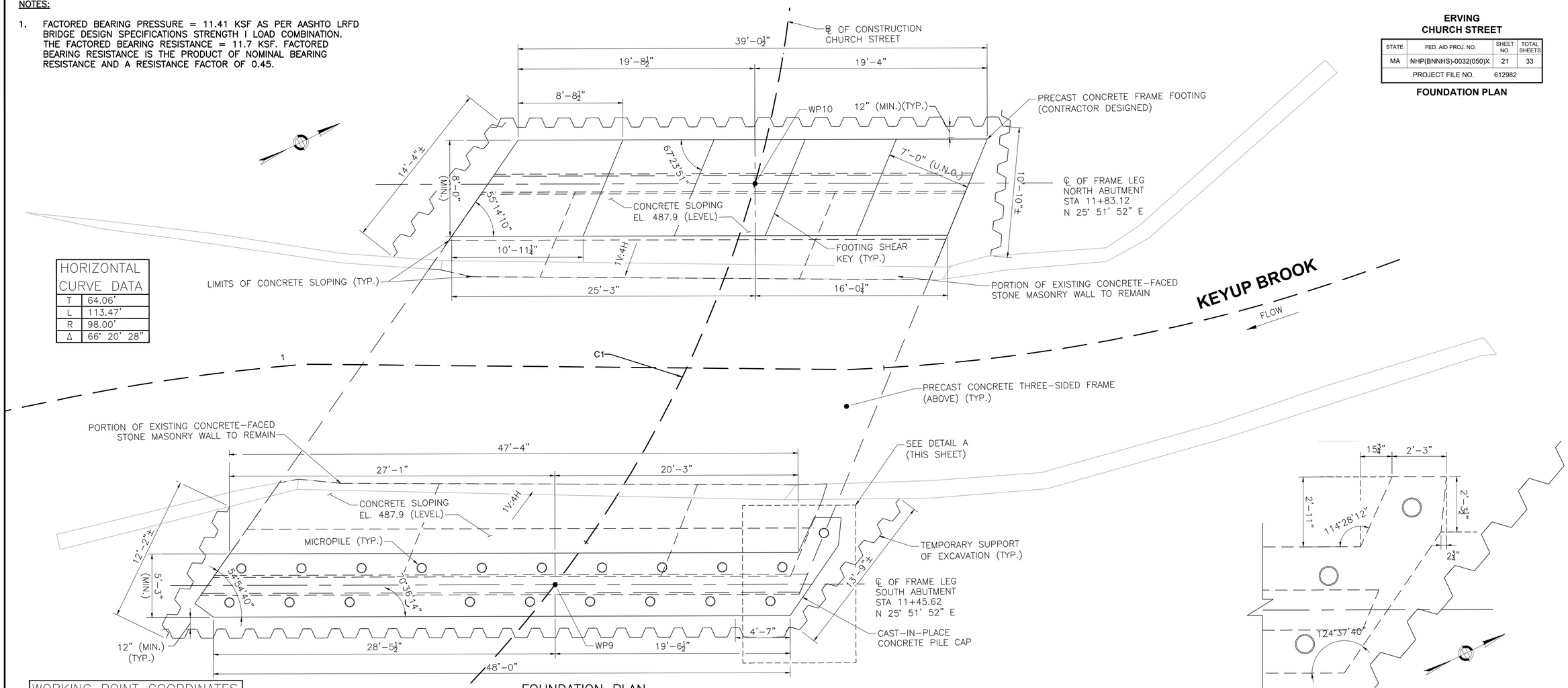

HORIZONTAL CURVE DATA	
T	64.06'
L	113.47'
R	98.00'
Δ	66° 20' 28"

WORKING POINT COORDINATES		
#	NORTHING	EASTING
WP9	3045821.7053	413967.5805
WP10	3045851.2908	413944.8797

FOUNDATION PLAN
SCALE: ¼" = 1'-0"

DETAIL A
SCALE: ½" = 1'-0"

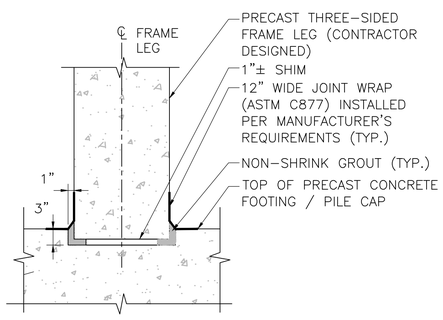

GROUTED KEYWAY DETAIL
SCALE: 1" = 1'-0"

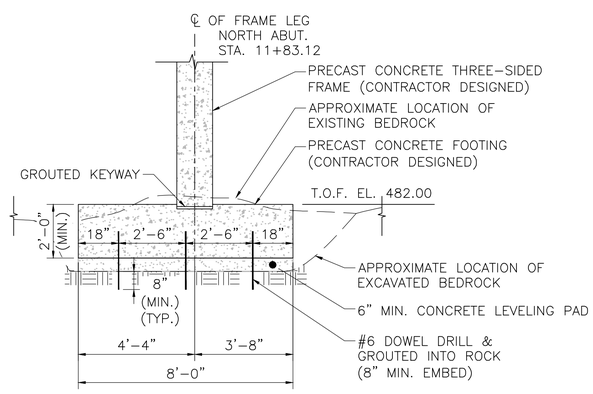

PRECAST FOOTING SECTION (NORTH ABUTMENT)
SCALE: ⅜" = 1'-0"

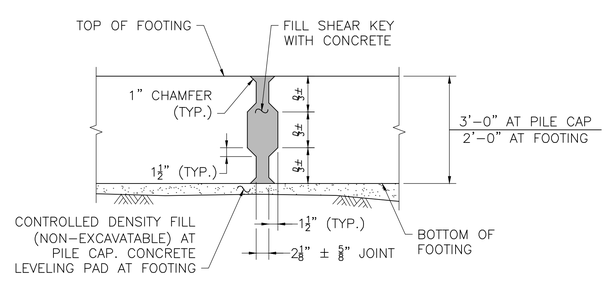

NOTE:
FOOTING REINFORCEMENT IS NOT SHOWN FOR CLARITY.

SECTION THRU SHEAR KEY
SCALE: 1" = 1'-0"

9/6/2025	ISSUED FOR CONSTRUCTION
DATE	DESCRIPTION

THIS SHEET IS APPROVED FOR CONSTRUCTION BY MASSDOT
AUTHORIZED SIGNATORY: STATE BRIDGE ENGINEER
USE ONLY PRINTS OF LATEST DATE

BR8(E10011)FDNPLAN.DWG Plotted on 18-Aug-2025 4:50 PM
2-MAY-2025
PSE DESIGN SUBMISSION REV. 1

NOTES:

1. CONCRETE TOPPING WILL BE PLACED DIRECTLY ON TOP OF THREE SIDED FRAME TO ACHIEVE PROPER GRADES PRIOR TO PLACING LIFTS OF HMA SUPERPAVE. DEPTH OF CONCRETE TOPPING VARIES FROM 3"± TO 16"±.

ERVING
CHURCH STREET

STATE	FED. AID PROJ. NO.	SHEET NO.	TOTAL SHEETS
MA	NHP(BNNHS)-0032(050)X	22	33
PROJECT FILE NO.	612982		

FRAMING PLAN

HORIZONTAL CURVE DATA	
T	64.06'
L	113.47'
R	98.00'
Δ	66° 20' 28"

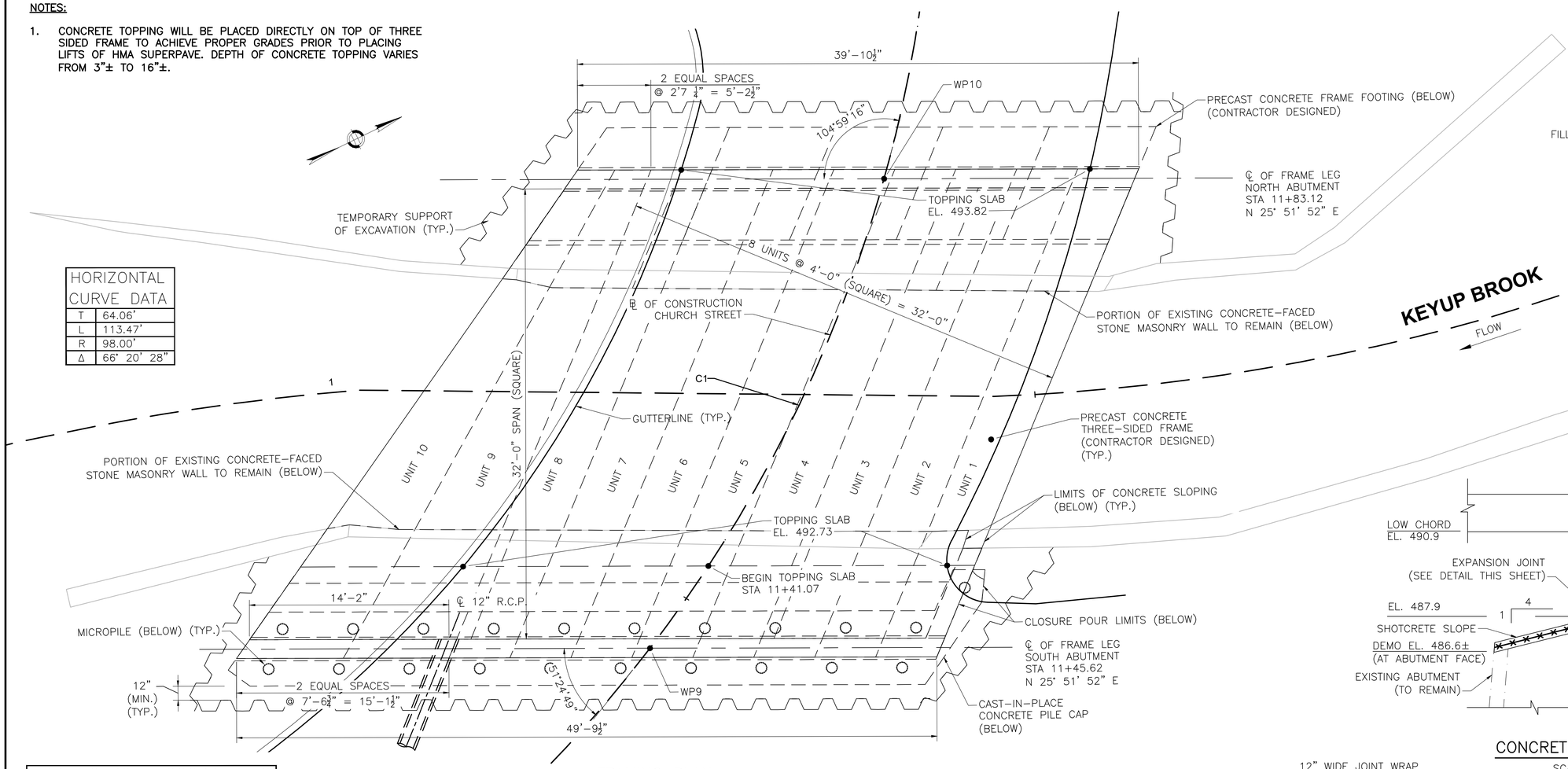

FRAMING PLAN

SCALE: ¼" = 1'-0"

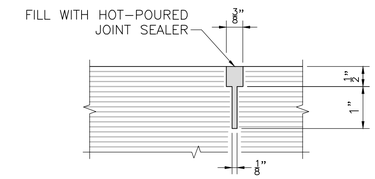

PAVEMENT SAWCUT DETAIL

NOT TO SCALE

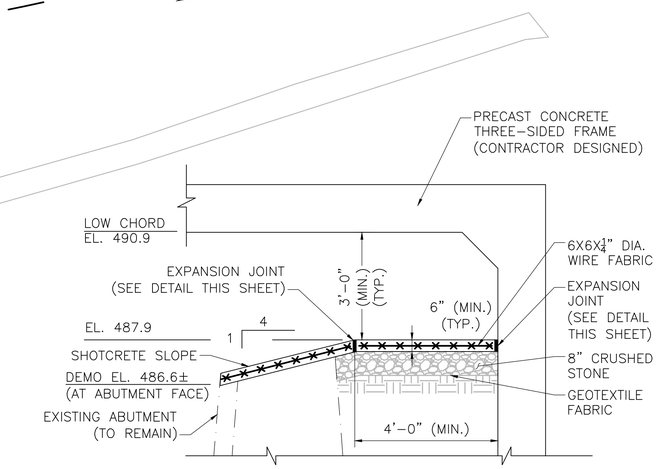

CONCRETE SLOPING DETAIL

SCALE: ½" = 1'-0"

WORKING POINT COORDINATES		
#	NORTHING	EASTING
WP9	3045821.7053	413967.5805
WP10	3045851.2908	413944.8797

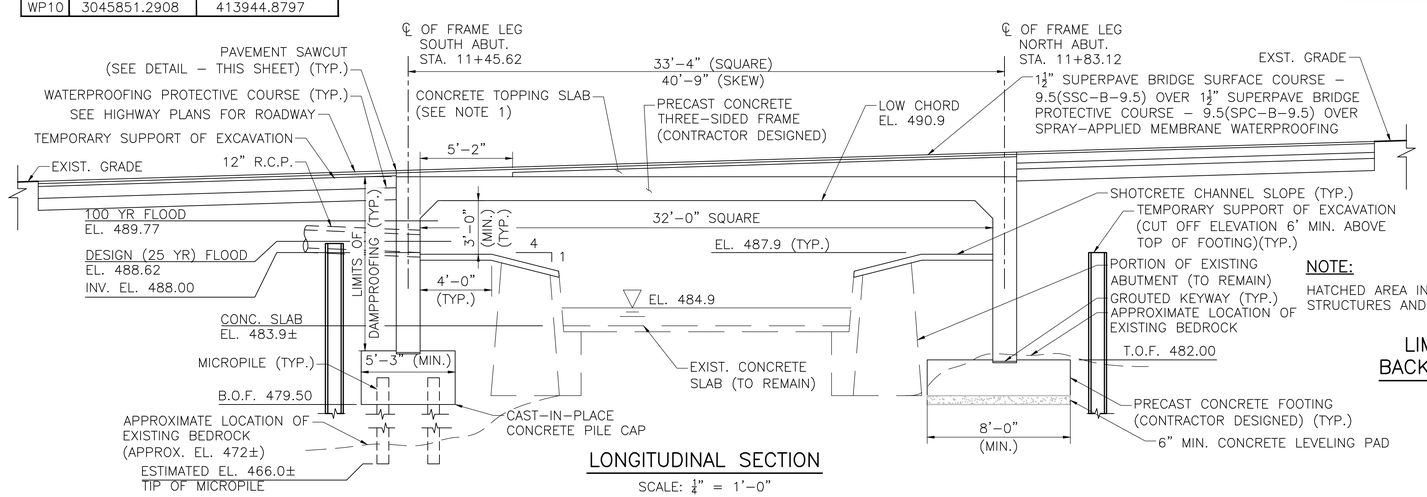

LONGITUDINAL SECTION

SCALE: ¼" = 1'-0"

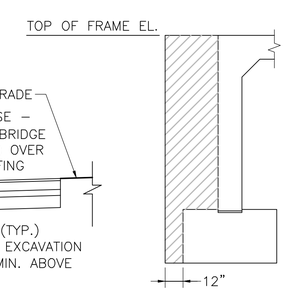

NOTE:

HATCHED AREA INDICATES LIMITS OF GRAVEL BORROW FOR BACKFILLING STRUCTURES AND PIPES.

LIMITS OF GRAVEL BORROW FOR BACKFILLING STRUCTURES AND PIPES

SCALE: ¼" = 1'-0"

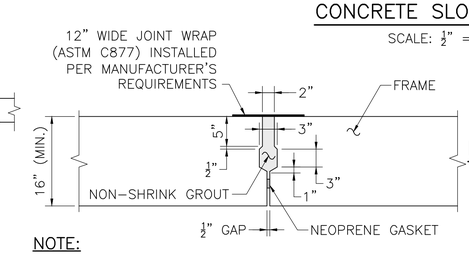

NOTE:

DETAILS AND DIMENSIONS ARE CONCEPTUAL AND MAY BE ALTERED BY THE FABRICATOR TO SUIT THEIR OPERATIONS, HOWEVER THE FUNCTION AND INTENT OF THE DETAIL MUST BE MET.

FRAME SHEAR KEY

SCALE: 1" = 1'-0"

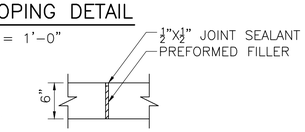

EXPANSION JOINT DETAIL

SCALE: 1" = 1'-0"

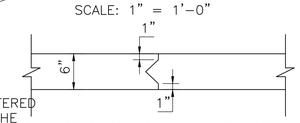

CONSTRUCTION JOINT DETAIL

SCALE: 1" = 1'-0"

9/6/2025	ISSUED FOR CONSTRUCTION
DATE	DESCRIPTION
THIS SHEET IS APPROVED FOR CONSTRUCTION BY MASSDOT AUTHORIZED SIGNATORY:	STATE BRIDGE ENGINEER
USE ONLY PRINTS OF LATEST DATE	

BRI(E10011)FRMPLAN.DWG Plotted on 18-Aug-2025 4:53 PM
2-MAY-2025
PSE DESIGN SUBMISSION REV. 1

NOTES:

1. CONCRETE TOPPING WILL BE PLACED DIRECTLY ON TOP OF THREE SIDED FRAME TO ACHIEVE PROPER GRADES PRIOR TO PLACING LIFTS OF HMA SUPERPAVE. DEPTH OF CONCRETE TOPPING VARIES FROM 3"± MIN. AT GUTTERLINE TO 16"± MIN. AT GUTTERLINE.

2. BRIDGE PAVEMENT STRUCTURE TO CONSIST OF 1½" SUPERPAVE BRIDGE SURFACE COURSE – 9.5(SSC–B–9.5) OVER 1½" SUPERPAVE BRIDGE PROTECTIVE COURSE – 9.5(SPC–B–9.5) OVER SPRAY–APPLIED MEMBRANE WATERPROOFING

2. COST OF DOWELS EXTENDING INTO TOPPING SLAB TO BE INCLUDED UNDER ITEM "PRECAST CONCRETE THREE–SIDED FRAME"

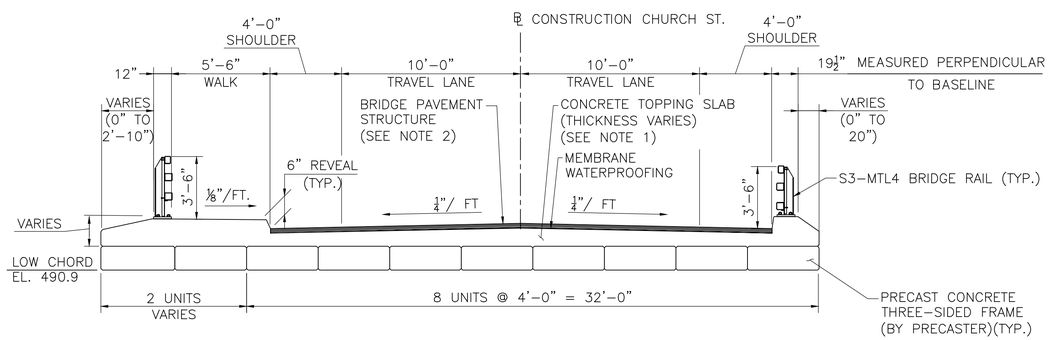

TRANSVERSE SECTION

SCALE: ¼" = 1'–0"

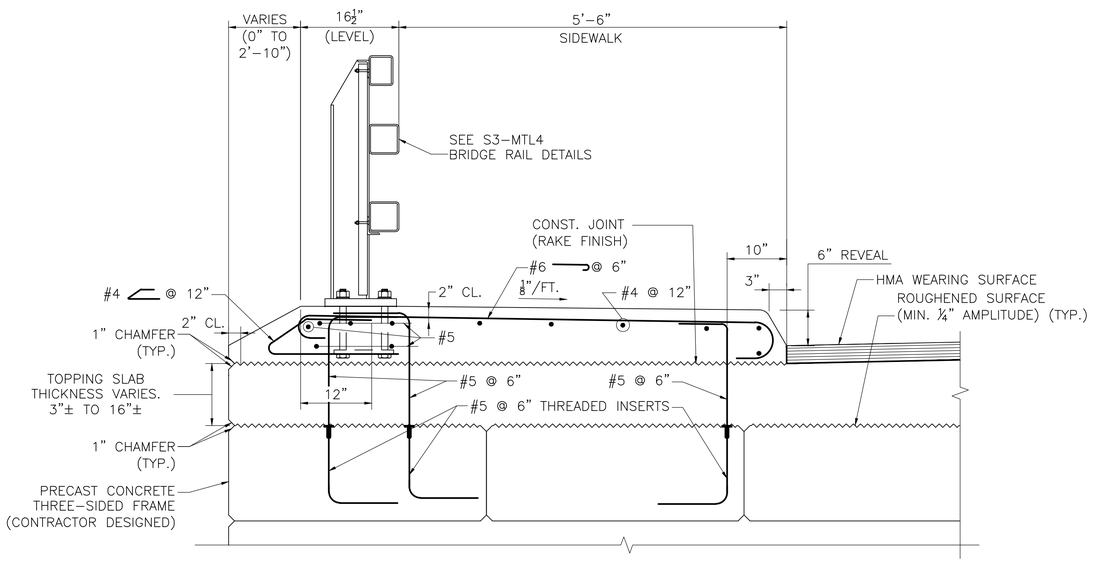

SECTION THRU SIDEWALK

SCALE: 1" = 1'–0"

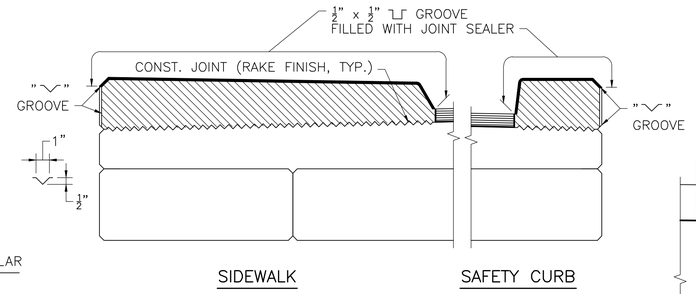

PARAFFIN JOINT DETAILS

SCALE: ¾" = 1'–0"

NOTES:

1. ALL CONCRETE ABOVE SLAB SHALL BE POURED IN ALTERNATING SECTIONS WITH NOT LESS THAN 3 DAYS BETWEEN POURS.

2. DO NOT CARRY LONGITUNDINAL BARS THROUGH PARAFFIN JOINTS.

3. JOINT SHALL BE SQUARE TO FACE OF CURB.

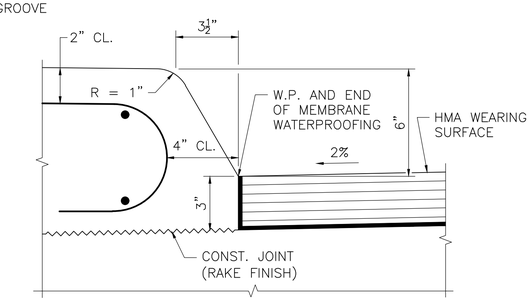

FACE OF SIDEWALK CURB DETAILS

NOT TO SCALE

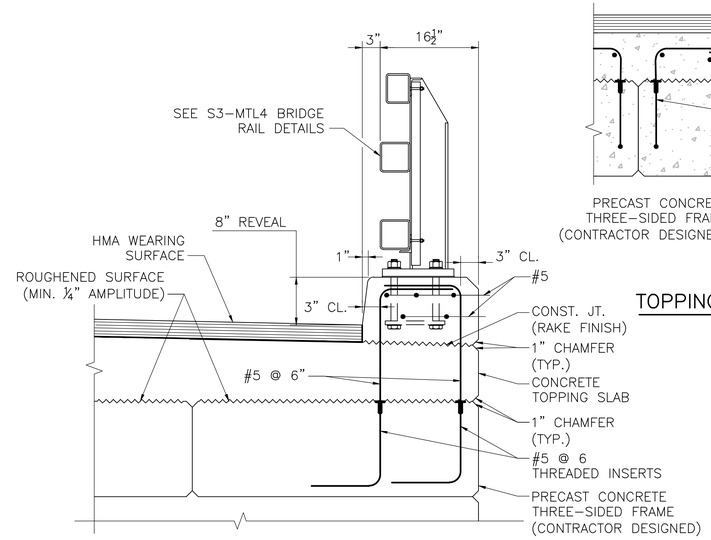

SECTION THRU SAFETY CURB

SCALE: 1" = 1'–0"

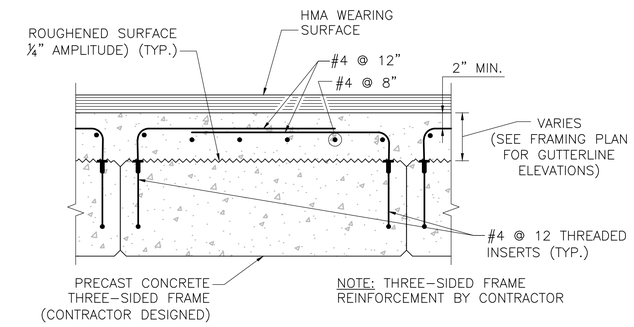

TOPPING SLAB REINFORCEMENT DETAIL

SCALE: 1" = 1'–0"

ERVING
CHURCH STREET

STATE	FED. AID PROJ. NO.	SHEET NO.	TOTAL SHEETS
MA	NHP(BNNHS)-0032(050)X	23	33
PROJECT FILE NO.	612982		

SUPERSTRUCTURE DETAILS

9/6/2025	ISSUED FOR CONSTRUCTION
DATE	DESCRIPTION

THIS SHEET IS APPROVED FOR CONSTRUCTION BY MASSDOT
AUTHORIZED SIGNATORY: STATE BRIDGE ENGINEER
USE ONLY PRINTS OF LATEST DATE

BR11(E10011) PRPTDET.DWG Plotted on 18-Aug-2025 4:56 PM
2-MAY-2025
PSE DESIGN SUBMISSION REV.1

WORKING POINT COORDINATES		
#	NORTHING	EASTING
WP11	3045847.3566	413967.7860
WP12	3045844.3294	413970.0957
WP13	3045844.3446	413974.9696

ERVING
CHURCH STREET

STATE	FED. AID PROJ. NO.	SHEET NO.	TOTAL SHEETS
MA	NHP(BNNHS)-0032(050)X	24	33
PROJECT FILE NO.	612982		

CURVED BRIDGE RAIL DETAILS I

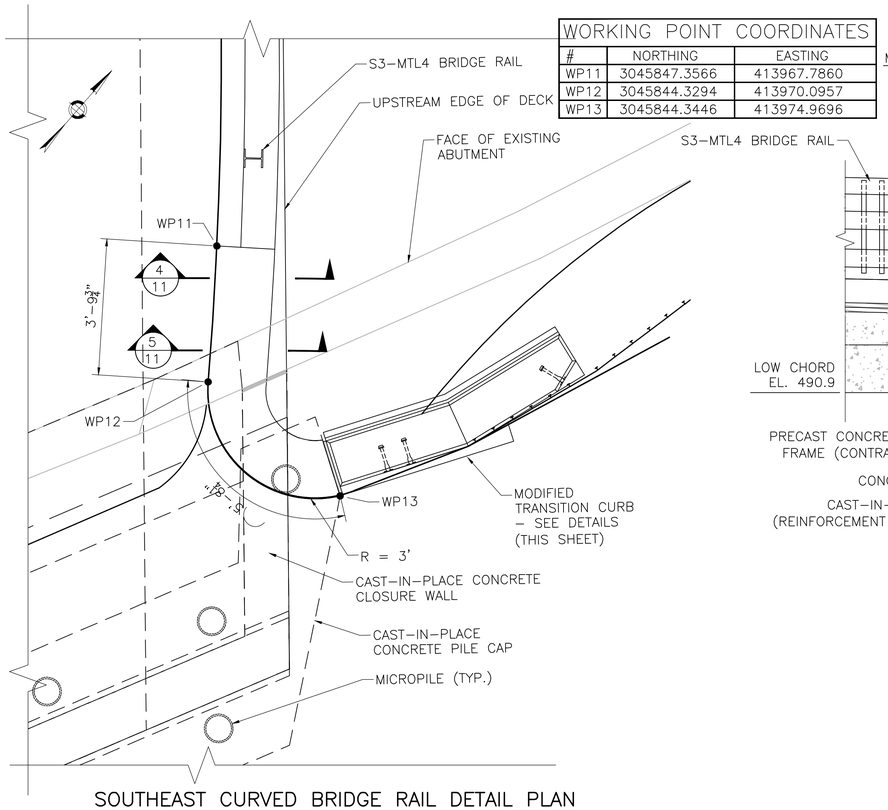

SOUTHEAST CURVED BRIDGE RAIL DETAIL PLAN

SCALE: ½" = 1'-0"

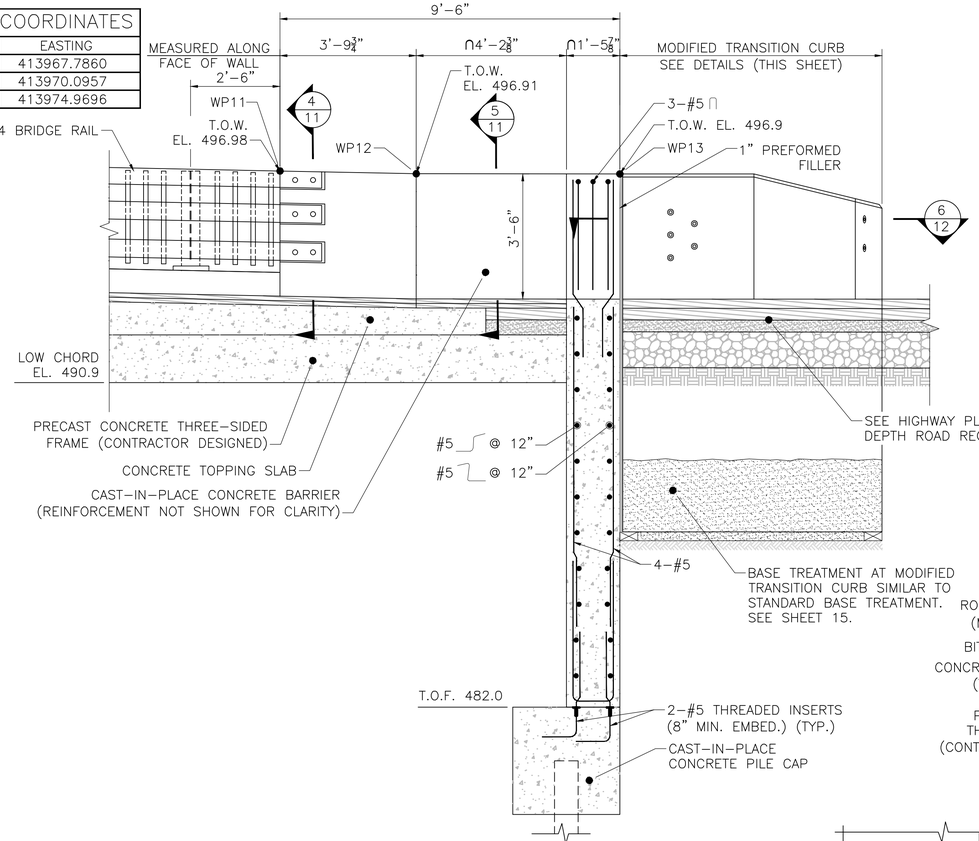

CURVED BRIDGE RAIL DEVELOPED ELEVATION

SCALE: ½" = 1'-0"

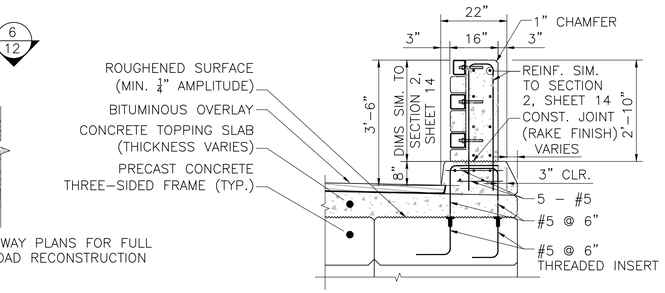

SECTION 4

SCALE: ½" = 1'-0"

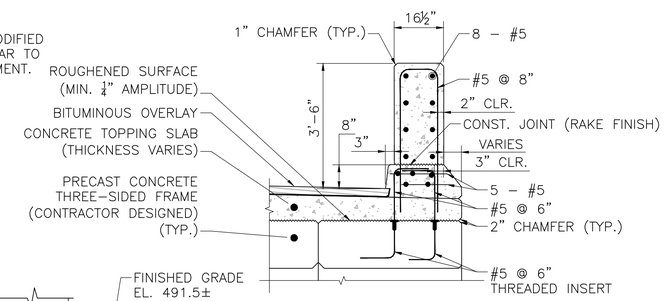

SECTION 5

SCALE: ½" = 1'-0"

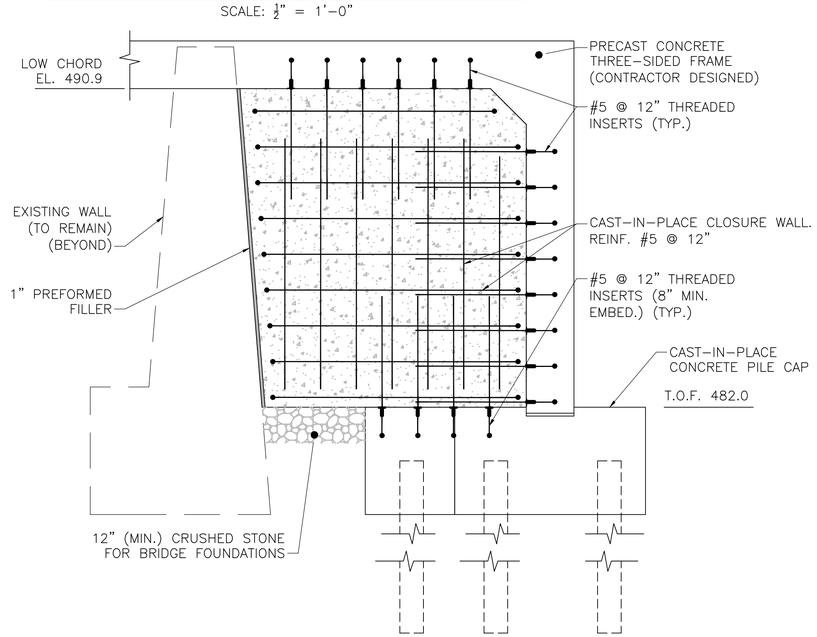

CLOSURE WALL ELEVATION

SCALE: ½" = 1'-0"

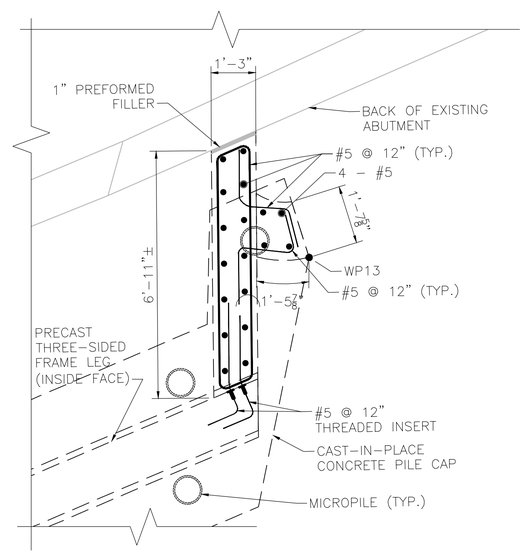

SOUTHEAST CLOSURE WALL DETAIL PLAN

SCALE: ½" = 1'-0"

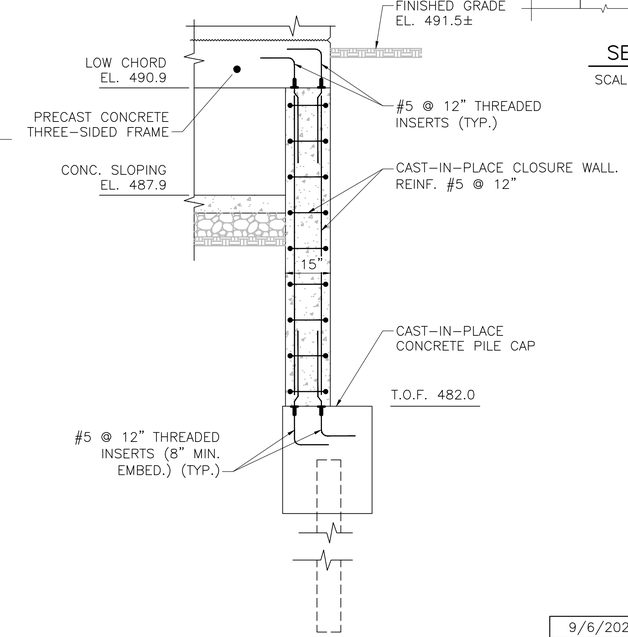

CLOSURE WALL SECTION

SCALE: ½" = 1'-0"

NOTES:

1. SEE SHEET 12 FOR PRECAST CONCRETE GUARDRAIL TRANSITION NOTES.

9/6/2025	ISSUED FOR CONSTRUCTION
DATE	DESCRIPTION

THIS SHEET IS APPROVED FOR CONSTRUCTION BY MASSDOT
AUTHORIZED SIGNATORY: STATE BRIDGE ENGINEER
USE ONLY PRINTS OF LATEST DATE

BR12-13(E10011) CURVEDRAIL_RECOVER.DWG Plotted on 18-Aug-2025 5:00 PM
2-MAY-2025
PSE DESIGN SUBMISSION REV. 1

WORKING POINT COORDINATES		
#	NORTHING	EASTING
WP14	3045833.1938	413935.6521
WP15	3045837.3886	413931.1548
WP16	3045834.1314	413923.7156

ERVING
CHURCH STREET

STATE	FED. AID PROJ. NO.	SHEET NO.	TOTAL SHEETS
MA	NHP(BNNHS)-0032(050)X	25	33
PROJECT FILE NO.	612982		

CURVED BRIDGE RAIL DETAILS II

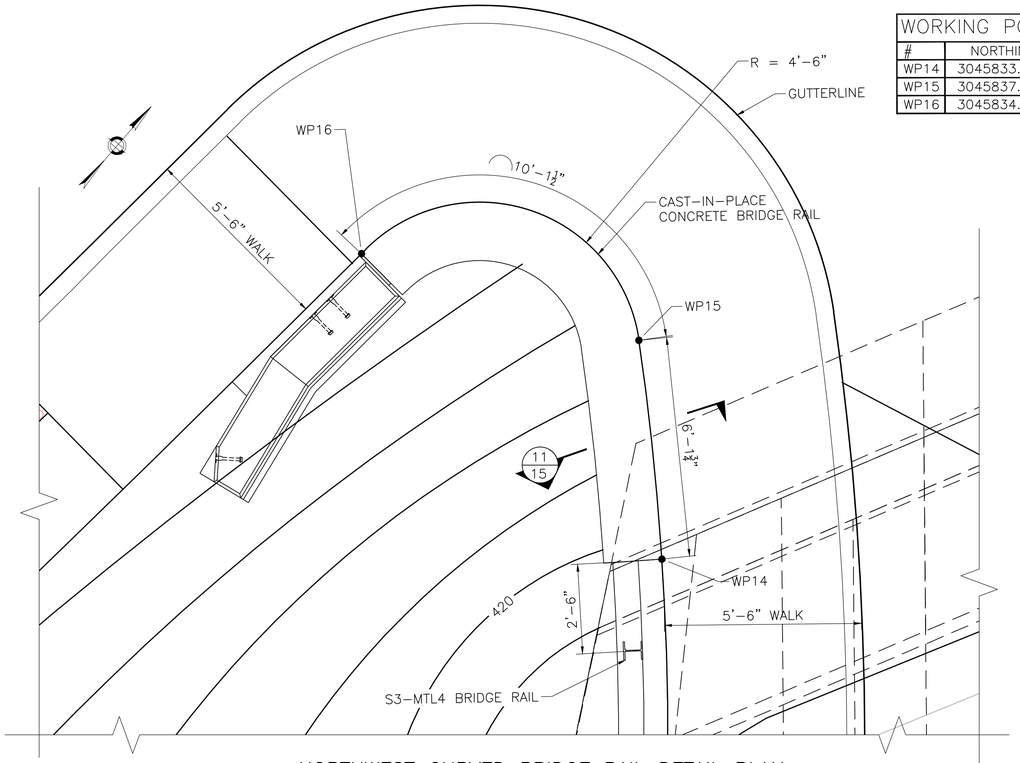

NORTHWEST CURVED BRIDGE RAIL DETAIL PLAN

SCALE: ½" = 1'-0"

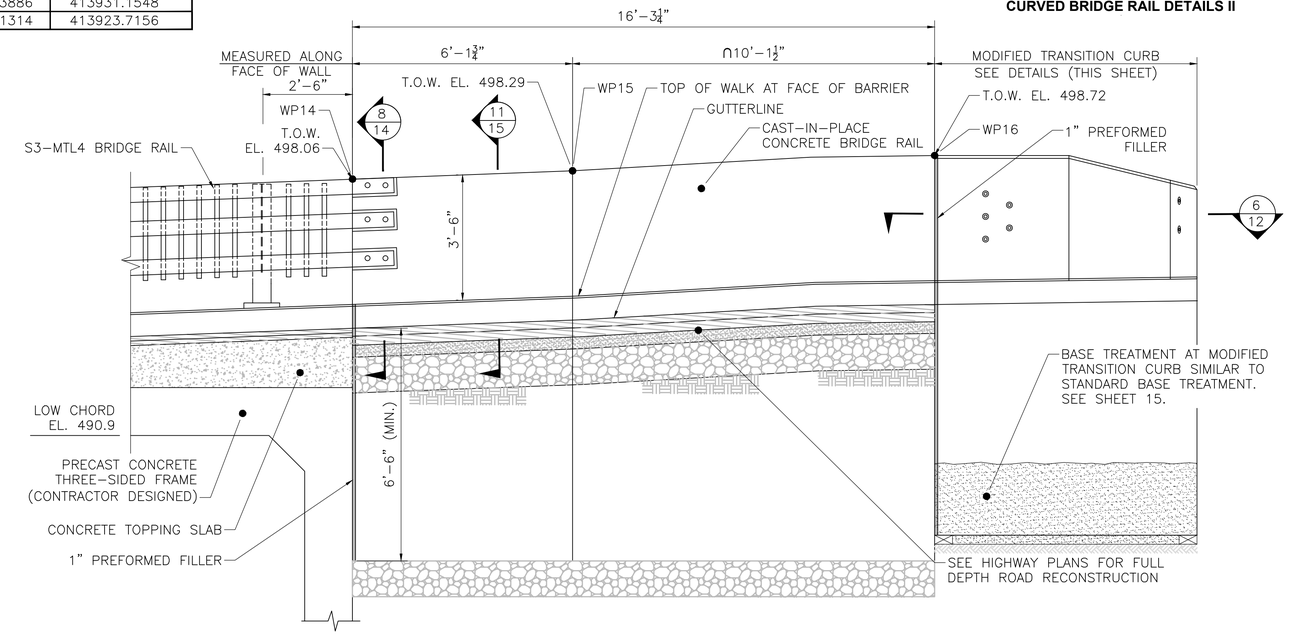

CURVED BRIDGE RAIL ELEVATION

SCALE: ½" = 1'-0"

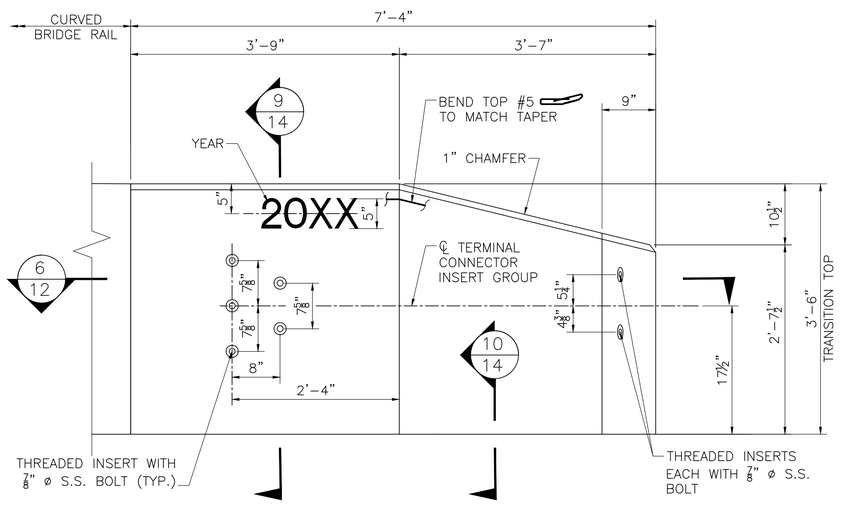

MODIFIED TRANSITION CURB ELEVATION

SCALE: 1" = 1'-0"

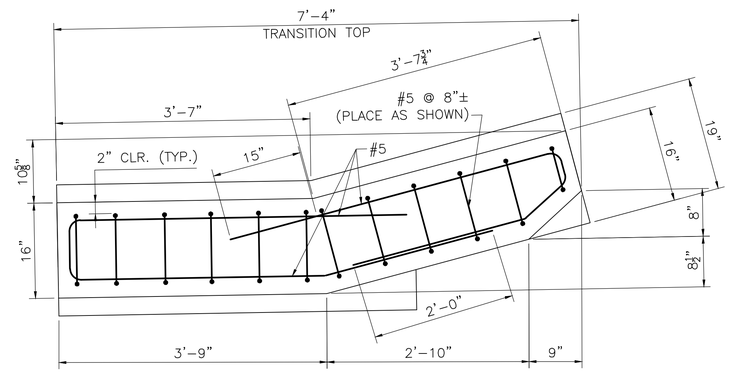

SECTION 6

SCALE: 1" = 1'-0"

NOTES:

1. SEE SHEET 12 FOR PRECAST CONCRETE GUARDRAIL TRANSITION NOTES.

9/6/2025	ISSUED FOR CONSTRUCTION
DATE	DESCRIPTION
THIS SHEET IS APPROVED FOR CONSTRUCTION BY MASSDOT AUTHORIZED SIGNATORY:	STATE BRIDGE ENGINEER
USE ONLY PRINTS OF LATEST DATE	

BR12-13(E10011) CURVEDRAIL_RECOVER.DWG Plotted on 18-Aug-2025 5:02 PM
2-MAY-2025
PSE DESIGN SUBMISSION REV. 1

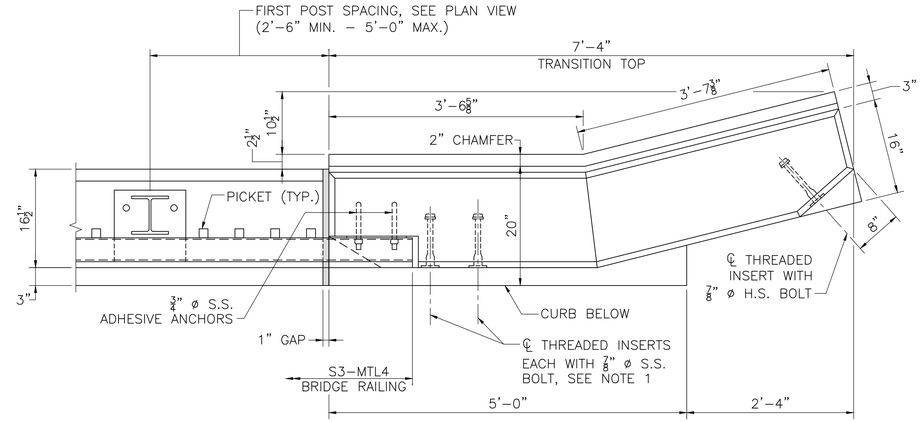

PLAN AT SAFETY CURB

SCALE: 1" = 1'-0"

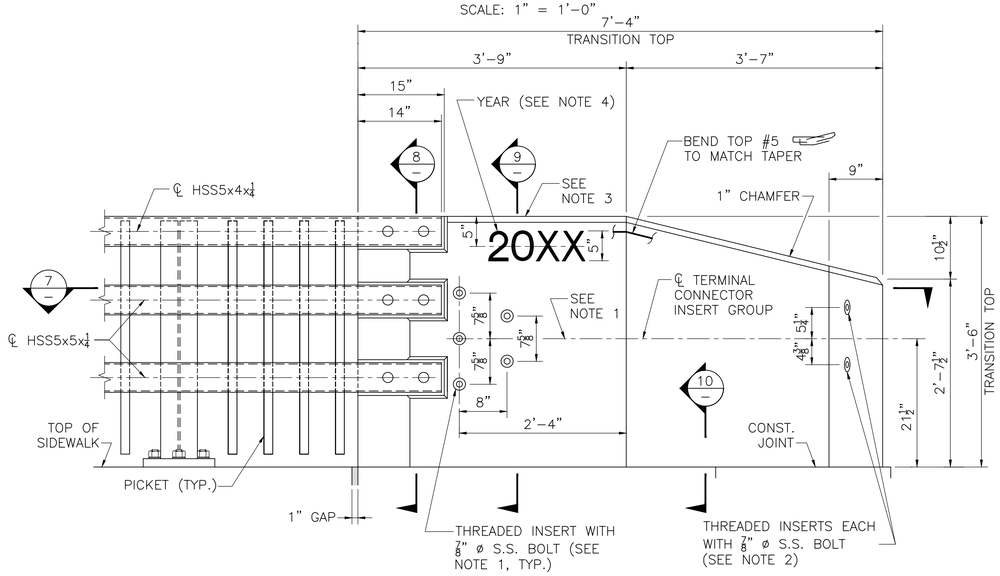

ELEVATION AT SIDEWALK

SCALE: 1" = 1'-0"

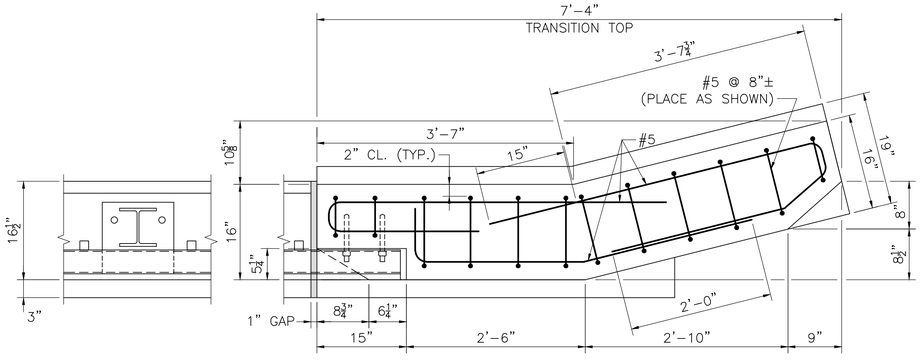

SECTION 7 / –

SCALE: 1" = 1'-0"

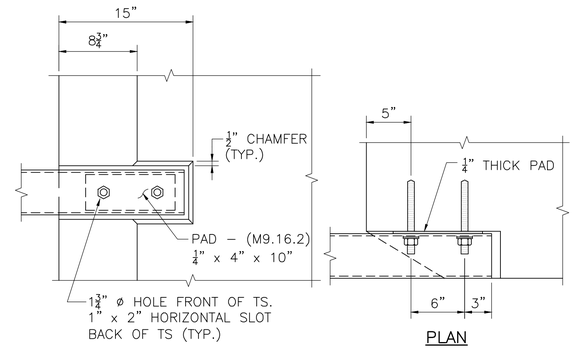

RAIL ATTACHMENT

SCALE: 1 1/2" = 1'-0"

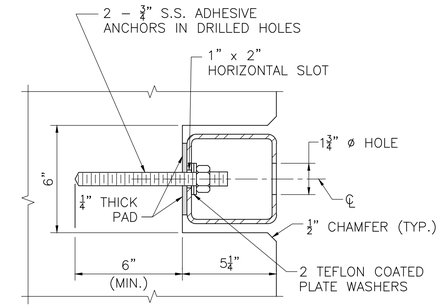

TYPICAL RAIL TO TRANSITION DETAIL

SCALE: 3" = 1'-0"

NOTES:

1. THREADED INSERTS SHALL BE PREQUALIFIED BY THE MANUFACTURER AS BEING CAPABLE OF DEVELOPING A NOMINAL SHEAR RESISTANCE OF 20 KIPS PER 7/8" ø S.S. (STAINLESS STEEL) BOLT. S.S. BOLTS SHALL BE 7/8" ø x 1 1/2" LONG FULLY THREADED CONFORMING TO ASTM F593D WITH AISI TYPE 304N S.S. WASHERS. INSERTS FOR 7/8" S.S. BOLTS SHALL BE GALVANIZED AND CAST INTO THE TRANSITION.

2. 7/8" ø HIGH STRENGTH BOLTS SHALL CONFORM TO THE REQUIREMENTS OF ASTM F3125 AND BE GALVANIZED. USE ADDITIONAL WASHERS AS REQUIRED TO PROPERLY ENGAGE THE BOLTS.

3. FOR AN APPROACH GRADE IN EXCESS OF 3%, THE TRANSITION TOP AND THE TOP OF CURB SHALL FOLLOW THE APPROACH GRADE. THE HEIGHT OF THE TRANSITION TOP SHALL VARY PROVIDED THAT THE MINIMUM DIMENSIONS SHOWN ON THE CONSTRUCTION DRAWINGS ARE MET. THE BOTTOM OF THE TRANSITION BASE SHALL BE SET LEVEL WITH THE MINIMUM EMBEDMENT DEPTH SHOWN. THE TERMINAL CONNECTOR INSERT GROUP SHALL BE SLOPED TO FOLLOW THE APPROACH GRADE.

   FOR AN APPROACH GRADE UP TO 3%, THE TRANSITION MAY BE CAST SQUARE AND SET PLUMB WITH THE MINIMUM EMBEDMENT DEPTH SHOWN. THE TERMINAL CONNECTOR INSERT GROUP SHALL BE SQUARE TO THE POST.

4. USE LATEST CONTRACT COMPLETION YEAR IN EFFECT WHEN THE FIRST GUARDRAIL TRANSITION IS CAST. USE THIS YEAR FOR ALL GUARDRAIL TRANSITIONS.

5. ALL CONCRETE FOR THE PRECAST HIGHWAY GUARDRAIL TRANSITION SHALL BE 5000 HP CEMENT CONCRETE.

6. LIFTING DEVICES (NOT SHOWN), INCLUDING THEIR NUMBER AND LOCATION, SHALL BE DESIGNED AND DETAILED BY THE PRECASTER. THEY SHALL BE GALVANIZED AND SHALL BE PLACED AND RECESSED IN POCKETS TO PROVIDE 1 1/2" CLEAR COVER TO THE FACE OF THE TRANSITION CONCRETE. THESE DEVICES SHALL BE CLEARLY SHOWN ON THE SHOP DRAWINGS ALONG WITH ALL SUPPORTING CALCULATIONS AND/OR CATALOG CUTS. ONCE THE PRECAST TRANSITION IS SET IN PLACE, THE LIFTING DEVICE POCKETS SHALL BE FILLED WITH A NON-SHRINK GROUT THAT MATCHES THE COLOR OF THE TRANSITION CONCRETE WHEN CURED AND THE FILLED POCKETS SHALL BE RUBBED WITH A CORUNDUM STONE TO BLEND OUT THE JOINTS.

ERVING
CHURCH STREET

STATE	FED. AID PROJ. NO.	SHEET NO.	TOTAL SHEETS
MA	NHP(BNNHS)-0032(050)X	26	33
PROJECT FILE NO.	612982		

TOP OF PRECAST HIGHWAY GUARDRAIL TRANSITION FOR S3-MTL4 RAILING
SHEET 1 OF 2

DATE	DESCRIPTION
9/6/2025	ISSUED FOR CONSTRUCTION

THIS SHEET IS APPROVED FOR CONSTRUCTION BY MASSDOT
AUTHORIZED SIGNATORY: STATE BRIDGE ENGINEER
USE ONLY PRINTS OF LATEST DATE

BR14-15(E10011) TRANCURBDET.DWG Plotted on 18-Aug-2025 by 2025BPM
2-MAY-2025
PSE DESIGN SUBMISSION REV. 1

ERVING
CHURCH STREET

STATE	FED. AID PROJ. NO.	SHEET NO.	TOTAL SHEETS
MA	NHP(BNNHS)-0032(050)X	27	33
PROJECT FILE NO.	612982		

TOP OF PRECAST HIGHWAY GUARDRAIL TRANSITION FOR S3-MTL4 RAILING
SHEET 2 OF 2

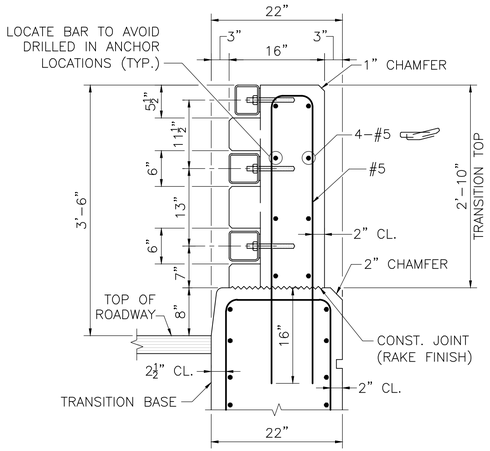

SECTION 8 AT SAFETY CURB
SCALE: 1" = 1'-0"

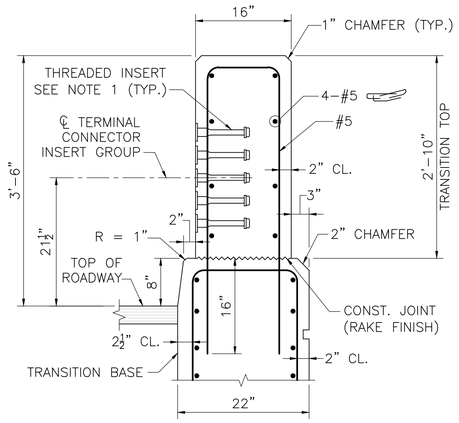

SECTION 9 AT SAFETY CURB
SCALE: 1" = 1'-0"

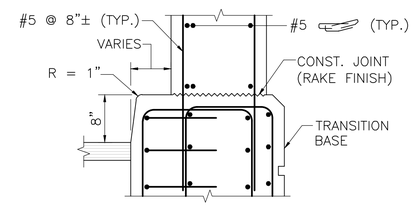

SECTION 10 AT SAFETY CURB
SCALE: 1" = 1'-0"

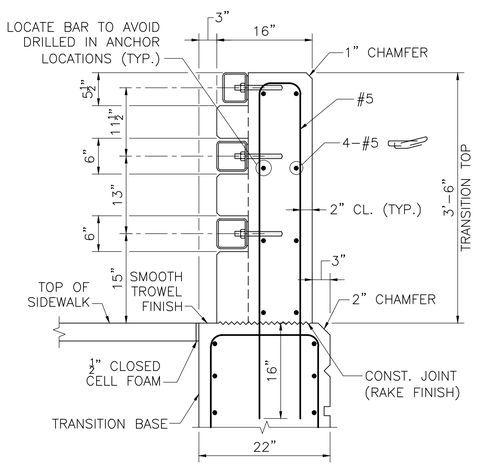

SECTION 8 AT SIDEWALK
SCALE: 1" = 1'-0"

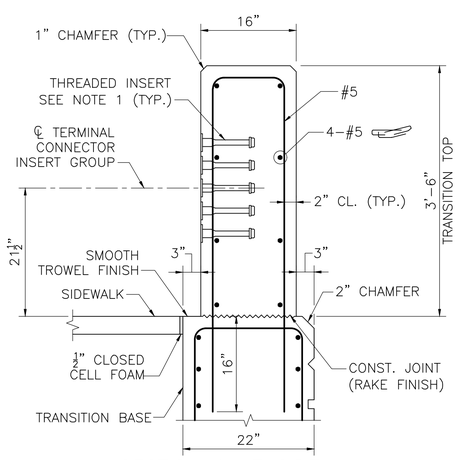

SECTION 9 AT SIDEWALK
SCALE: 1" = 1'-0"

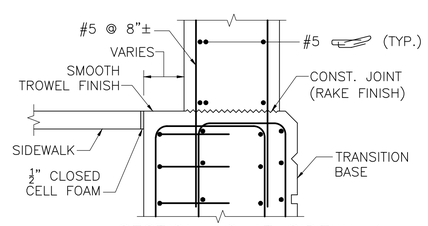

SECTION 10 AT SIDEWALK
SCALE: 1" = 1'-0"

DATE	DESCRIPTION
9/6/2025	ISSUED FOR CONSTRUCTION

THIS SHEET IS APPROVED FOR CONSTRUCTION BY MASSDOT
AUTHORIZED SIGNATORY: STATE BRIDGE ENGINEER
USE ONLY PRINTS OF LATEST DATE

BR14-15(E10011) TRANCURBDET.DWG Plotted on 18-Aug-2026 by 2026BM
2-MAY-2025
PSE DESIGN SUBMISSION REV. 1

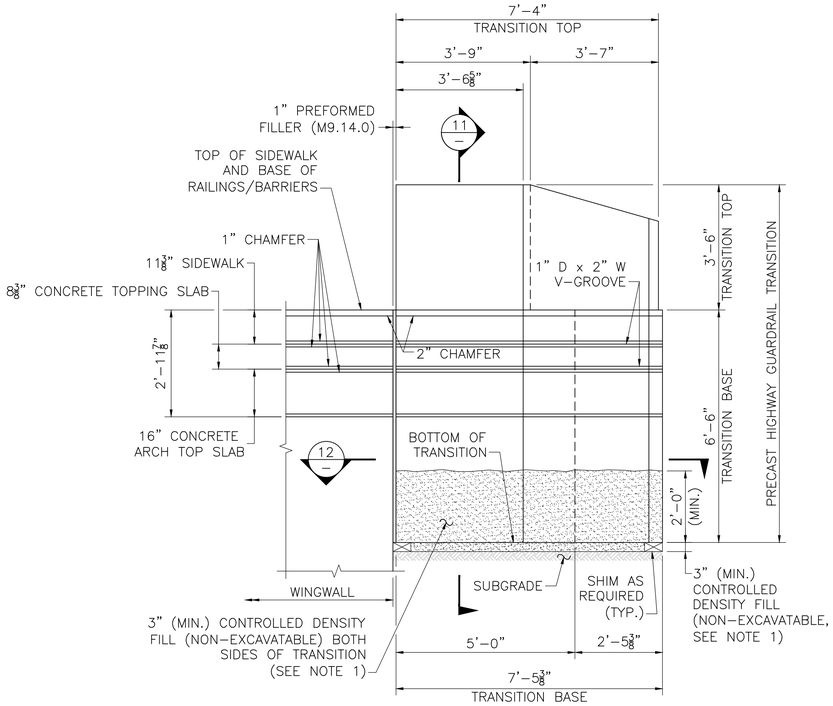

PRECAST GUARDRAIL TRANSITION ELEVATION AT U-WINGWALL

SCALE: ½" = 1'-0"

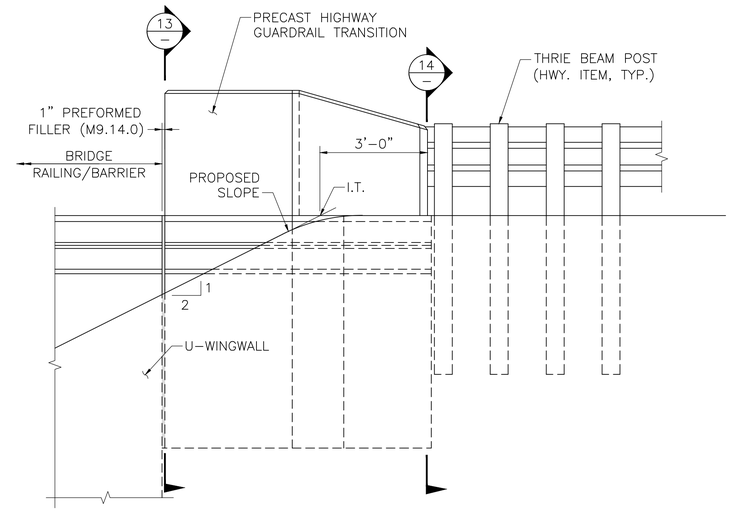

GRADING REQUIREMENTS ELEVATION

SCALE: ½" = 1'-0"

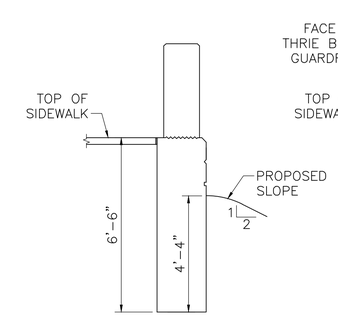

SECTION 13 AT SIDEWALK

SCALE: ⅜" = 1'-0"

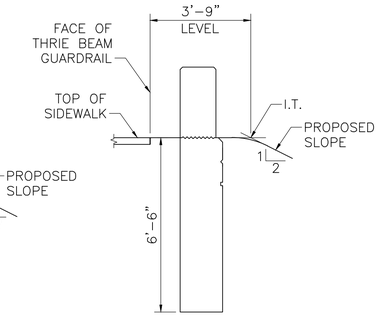

SECTION 14 AT SIDEWALK

SCALE: ⅜" = 1'-0"

ERVING
CHURCH STREET

STATE	FED. AID PROJ. NO.	SHEET NO.	TOTAL SHEETS
MA	NHP(BNNHS)-0032(050)X	28	33
PROJECT FILE NO.	612982		

TRANSITION BASE DETAILS

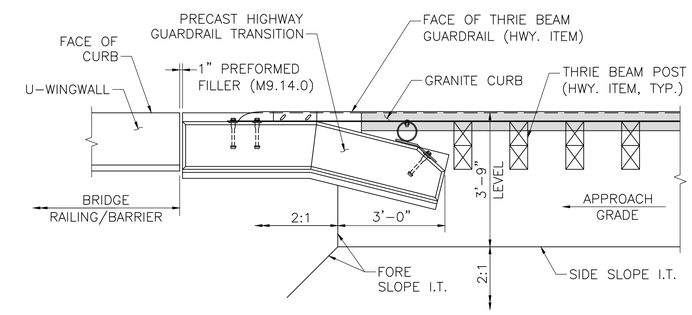

GRADING REQUIREMENTS PLAN

SCALE: ½" = 1'-0"

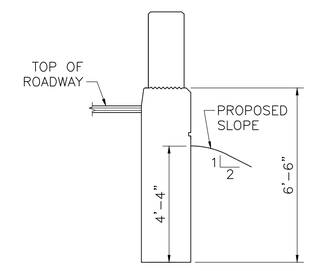

SECTION 13 AT CURB

SCALE: ⅜" = 1'-0"

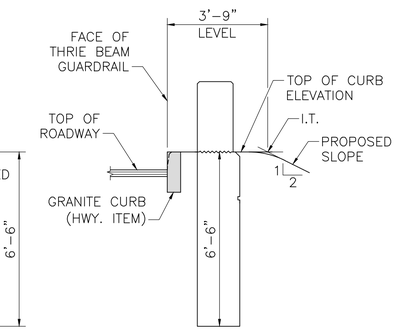

SECTION 14 AT CURB

SCALE: ⅜" = 1'-0"

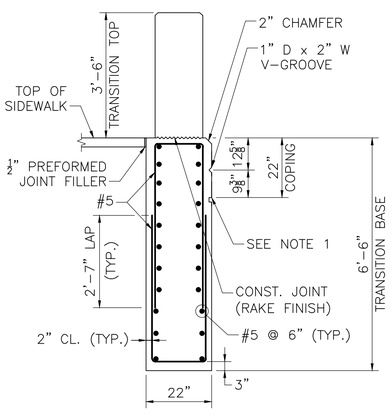

FOR S3-MTL4 RAILING AT SIDEWALK SIDE

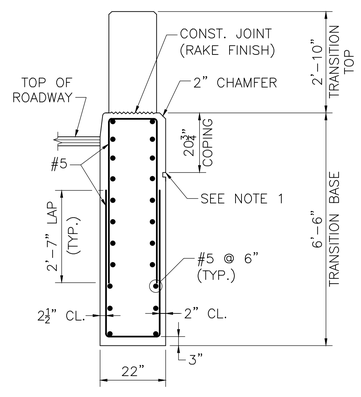

FOR S3-MTL4 RAILING AT SAFETY CURB

SECTION 11

SCALE: ½" = 1'-0"

NOTES:

1. 1½" H x 1" D GROOVE. ALIGN WITH GROOVE AT TOP OF STRIATIONS.
2. REINFORCEMENT OF THE TRANSITION TOP IS NOT SHOWN FOR CLARITY.

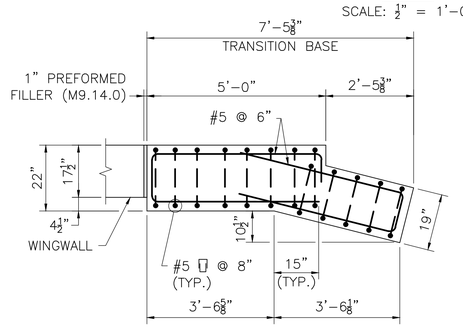

NOTE:

WINGWALL REINFORCEMENT AND STRIATIONS NOT SHOWN FOR CLARITY.

SECTION 12

SCALE: ½" = 1'-0"

NOTES:

1. PRECAST GUARDRAIL TRANSITION SHALL BE 5000 PSI, ¾ IN, 685 HP CEMENT CONCRETE.
2. GRAVEL BORROW SHALL BE PLACED AND THOROUGHLY COMPACTED TO THE GRADE OF 3" (MIN.) BELOW THE INTENDED BOTTOM OF THE PRECAST GUARDRAIL TRANSITION BASE AND TO A HEIGHT OF 2'-0" (MIN.) ON ALL SIDES OF THE TRANSITION BASE TO FORM A TRENCH IN WHICH TO SET THE TRANSITION. WHERE NO GRAVEL BORROW IS REQUIRED BELOW THE BASE, IT SHALL BE PLACED ON UNDISTURBED SOIL.
3. CONTRACTOR SHALL SET THE PRECAST GUARDRAIL TRANSITION TO THE REQUIRED ELEVATION AND ALIGNMENT, AND BACKILL PRECAST GUARDRAIL TRANSITION WITH CONTROLLED DENSITY FILL (NON-EXCAVATABLE) TO THE ELEVATION SHOWN.
4. NOTES 1-3 APPLY TO STRAIGHT PRECAST GUARDRAIL TRANSITIONS (NORTHEAST, NORTHWEST, SOUTHWEST) ONLY, AND DOES NOT APPLY TO THE CURVED GUARDRAIL TRANSITION (SOUTHEAST). SEE SHEET 11 FOR CURVED GUARDRAIL DETAILS.

9/6/2025	ISSUED FOR CONSTRUCTION
DATE	DESCRIPTION
THIS SHEET IS APPROVED FOR CONSTRUCTION BY MASSDOT AUTHORIZED SIGNATORY:	STATE BRIDGE ENGINEER
USE ONLY PRINTS OF LATEST DATE	

BR16(E10011) TRNBASEDET.DWG Plotted on 18-Aug-2025 5:04 PM
2-MAY-2025
PSE DESIGN SUBMISSION REV. 1

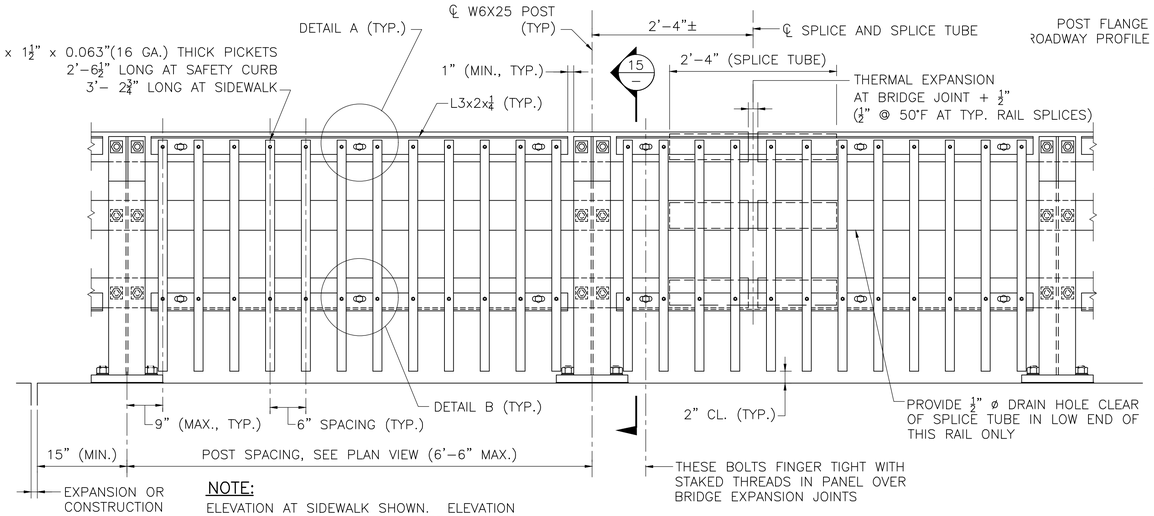

NOTE:
ELEVATION AT SIDEWALK SHOWN. ELEVATION AT SAFETY CURB SIMILAR, EXCEPT AS NOTED.

BRIDGE RAILING ELEVATION

SCALE: 1" = 1'-0"

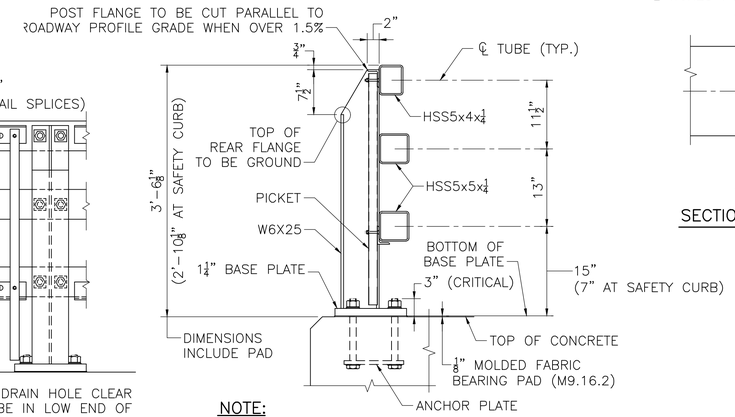

NOTE:
SECTION AT SIDEWALK SHOWN. SECTION AT SAFETY CURB SIMILAR, EXCEPT AS NOTED.

SECTION 15

SCALE: 1" = 1'-0"

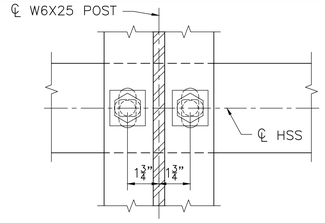

SECTION THRU POST WEB

ERVING CHURCH STREET

STATE	FED. AID PROJ. NO.	SHEET NO.	TOTAL SHEETS
MA	NHP(BNNHS)-0032(050)X	29	33
PROJECT FILE NO.	612982		

BRIDGE RAIL DETAILS

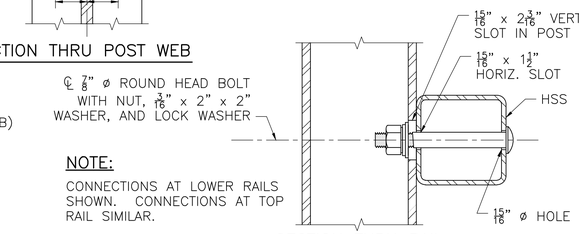

NOTE:
CONNECTIONS AT LOWER RAILS SHOWN. CONNECTIONS AT TOP RAIL SIMILAR.

SECTION THRU RAIL

TYPICAL RAIL TO POST CONNECTIONS

SCALE: 3" = 1'-0"

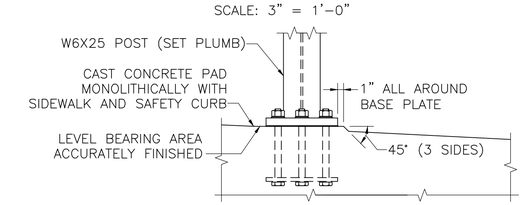

SETTING OF POSTS (PROFILE GRADE OVER 1.5%)

SCALE: 1" = 1'-0"

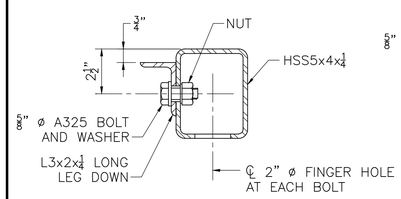

SECTION 16

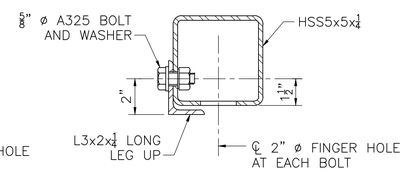

SECTION 18

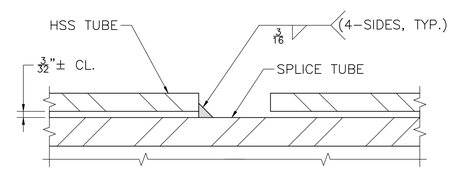

SPLICE DETAIL

SCALE: 1'-0" = 1'-0"

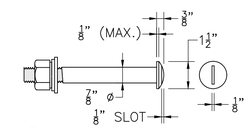

⅞" ø ROUND HEAD BOLT

SCALE: 3" = 1'-0"

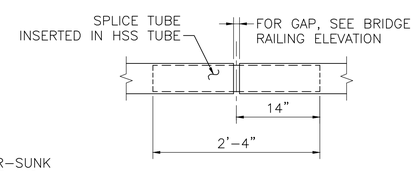

TYPICAL SPLICE

SCALE: 1" = 1'-0"

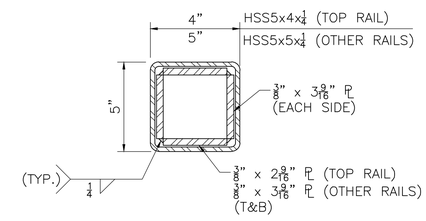

SPLICE TUBE DETAILS

SCALE: 3" = 1'-0"

RAILING NOTES:

1. RAIL POST AND BASE PLATES SHALL CONFORM TO THE REQUIREMENTS OF AASHTO M 270 GRADE 50. HOLLOW RAILING STRUCTURAL TUBING (HSS) SHALL CONFORM TO THE REQUIREMENTS OF ASTM A 500 WITH A CERTIFIED Fy = 50 KSI MINIMUM. THE MINIMUM HORIZONTAL BENDING RADII OF THE HSS TUBING SHALL BE 8 FEET. PICKET CARRIER ANGLES, ANCHOR PLATES, AND SPLICE TUBE PLATES SHALL CONFORM TO THE REQUIREMENTS OF AASHTO M 270 GRADE 36. PICKET TUBING SHALL CONFORM TO ASTM A 513 WITH Fy = 36 KSI MIN. OR A 500 GRADE B.
2. ALL STEEL (EXCEPT THE ⅝" ANCHOR PLATE AND FASTENERS) SHALL BE GALVANIZED AND PAINTED DARK BRONZE (FEDERAL STD. 595B COLOR NO. 10045). ANCHOR PLATE SHALL BE GALVANIZED ONLY. HEADS OF ⅞" ø ROUND HEAD BOLTS SHALL BE PAINTED TO MATCH RAIL.
3. ANCHOR BOLTS SHALL BE SET WITH TEMPLATES. THE NUT SECURING THE POST BASE PLATE TO THE CONCRETE SHALL BE TIGHTENED TO A SNUG FIT AND GIVEN AN ADDITIONAL 1/8 TURN AFTER STEEL IS IN PLACE.
4. RAILS SHALL BE CONTINUOUS OVER A MINIMUM OF FOUR (4) POSTS WITHOUT SPLICES WHERE POSSIBLE. IN ADDITION SPLICES SHALL ALSO BE LOCATED IN RAILS OVER BRIDGE EXPANSION JOINTS.
5. ENDS OF TUBE SECTIONS SHALL BE SAWED. GRIND SMOOTH EXPOSED EDGES. ALL CUT ENDS SHALL BE TRUE AND SMOOTH.
6. ALL POSTS TO BE PLUMB WHEN PROFILE GRADE EXCEEDS 1.5%. FOR PROFILE GRADES LESS THAN 1.5%, POSTS SHALL BE SET PERPENDICULAR TO GRADE.
7. POST TO FLANGE WELD DOES NOT REQUIRE MAGNETIC PARTICLE TESTING. BEVEL OUTSIDE FLANGES OF POST. FIT POST TO BASE PLATE. WELD 5/16" FILLET ON INSIDE OF FLANGE AND WEB. BACKGOUGE OUTSIDE OF FLANGE TO SOUND METAL. COMPLETE GROOVE WELD WITH MINIMUM OF ⅛" REINFORCEMENT. WELD IS THE SAME ON BOTH FLANGES.
8. ⅞" ø ROUND HEAD BOLTS SHALL CONFORM TO THE CHEMICAL AND PHYSICAL REQUIREMENTS OF ASTM F3125 GRADE 325 TYPE 1 GALVANIZED.

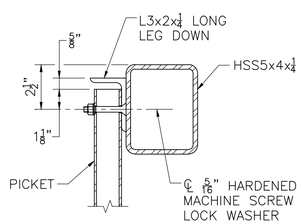

SECTION 17

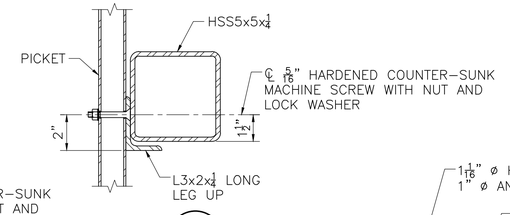

SECTION 19

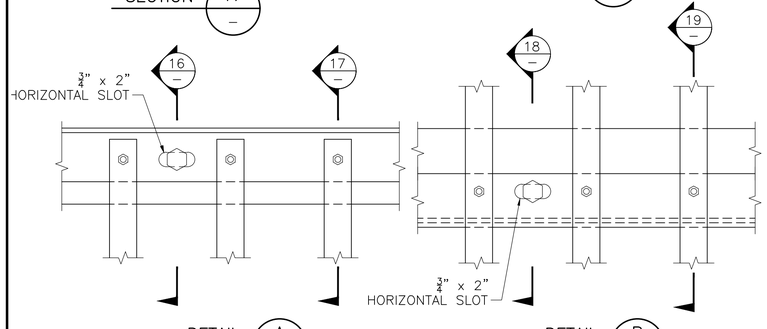

DETAIL A

DETAIL B

TYPICAL PICKET TO RAIL DETAILS

SCALE: 3" = 1'-0"

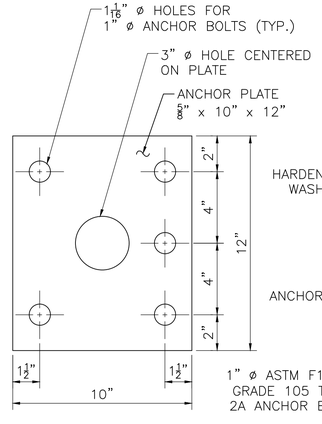

ANCHOR PLATE

SCALE: 3" = 1'-0"

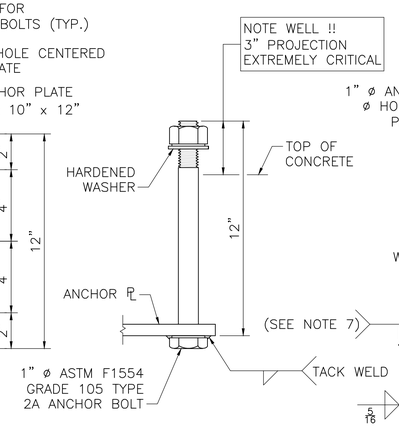

ANCHOR BOLT

SCALE: 3" = 1'-0"

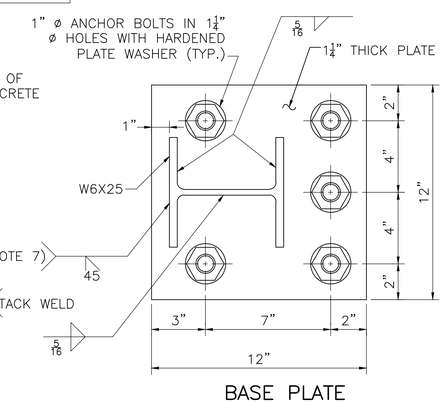

BASE PLATE

SCALE: 3" = 1'-0"

9/6/2025	ISSUED FOR CONSTRUCTION
DATE	DESCRIPTION
THIS SHEET IS APPROVED FOR CONSTRUCTION BY MASSDOT AUTHORIZED SIGNATORY:	STATE BRIDGE ENGINEER
USE ONLY PRINTS OF LATEST DATE	

BR17(E10011)RAILDET.DWG Plotted on 18-Aug-2025 5:05 PM
2-MAY-2025
PSE DESIGN SUBMISSION REV. 1

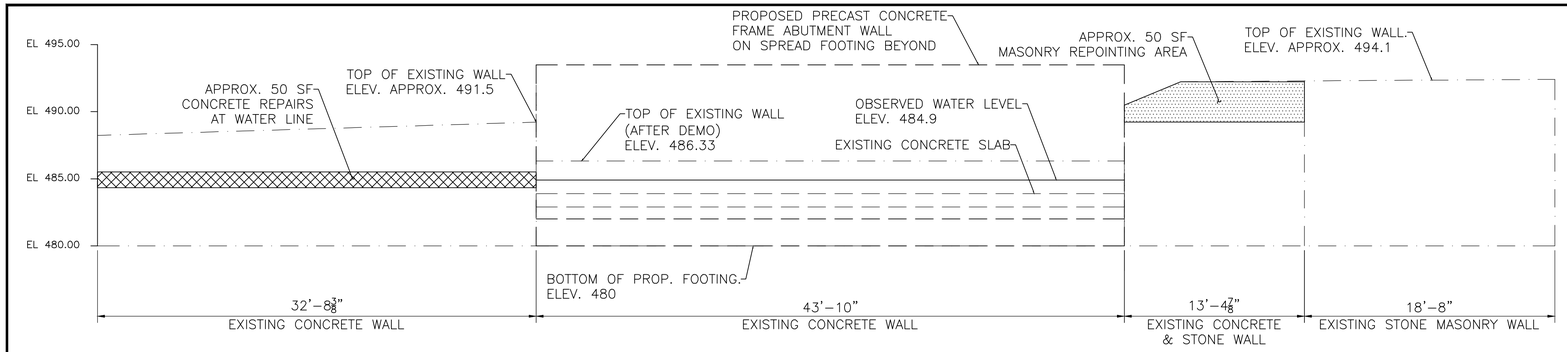

KEYUP BROOK EXISTING NORTH WALL ELEVATION

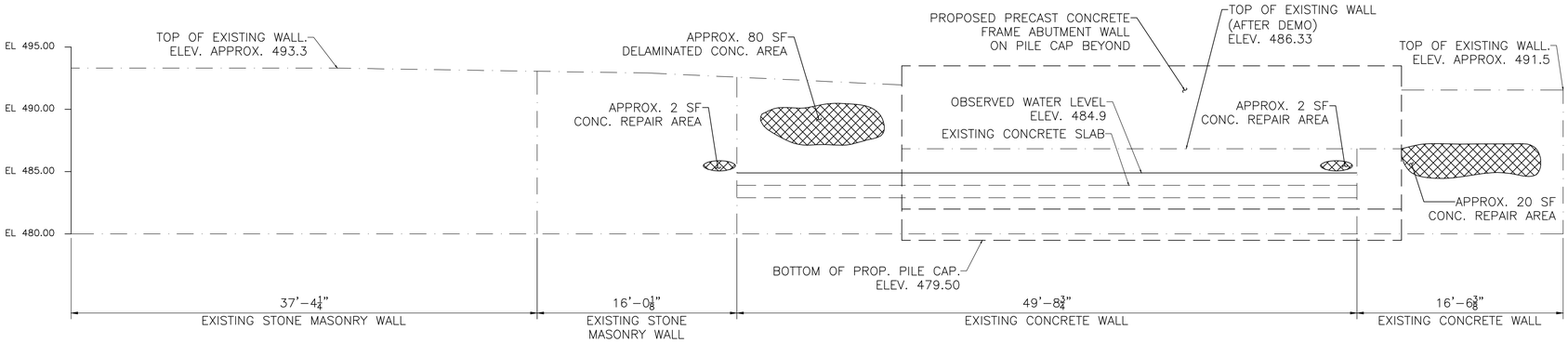

KEYUP BROOK EXISTING SOUTH WALL ELEVATION

SUBSTRUCTURE WALL ELEVATIONS

SCALE: 3/16" = 1'-0"

– INDICATES AREA OF MASONRY REPOINTING. SEE "MASONRY REPOINTING DETAIL" ON THIS SHEET.

– INDICATES AREA OF CONCRETE REPAIR. SEE "TYPE A REPAIR DETAIL" OR "TYPE B REPAIR DETAIL" ON THIS SHEET.

ERVING
CHURCH STREET

STATE	FED. AID PROJ. NO.	SHEET NO.	TOTAL SHEETS
MA	NHP(BNNHS)-0032(050)X	30	33
PROJECT FILE NO.	612982		

WALL REPAIR DETAILS

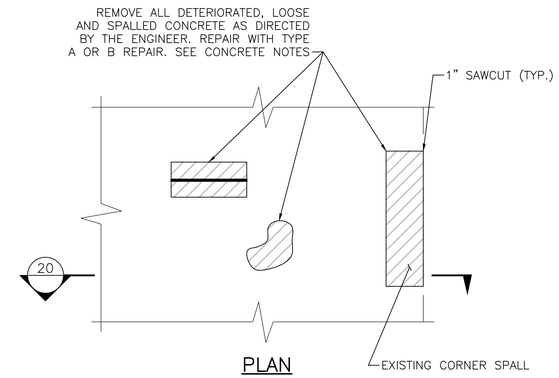

PLAN

CONCRETE REPAIR DETAIL

SCALE: 1/4" = 1'-0"

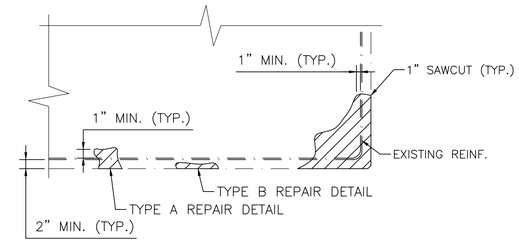

SECTION 20

CONCRETE REPAIR DETAIL

SCALE: 1/4" = 1'-0"

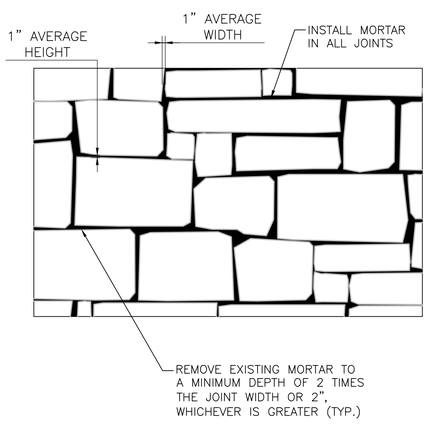

MASONRY REPOINTING DETAIL

SCALE: 1/2" = 1'-0"

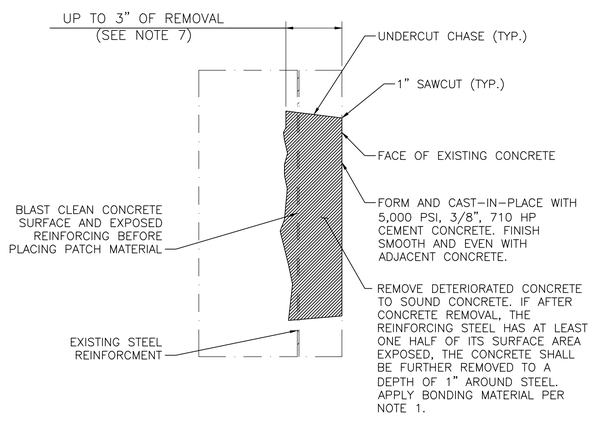

TYPE A REPAIR DETAIL

SCALE: 1/4" = 1'-0"

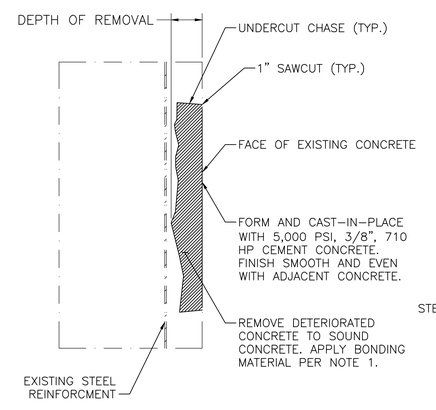

TYPE B REPAIR DETAIL

SCALE: 1/4" = 1'-0"

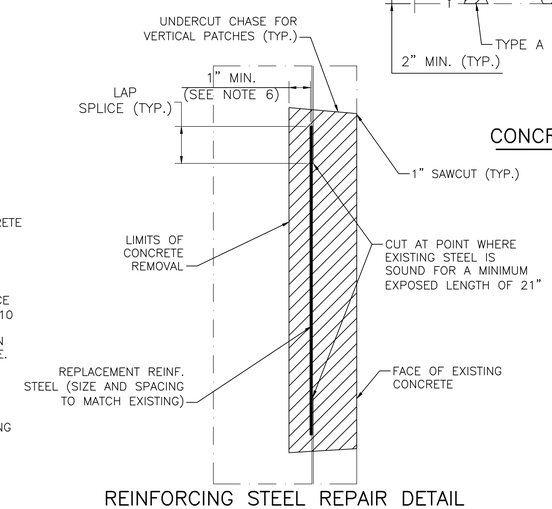

REINFORCING STEEL REPAIR DETAIL

SCALE: 1/4" = 1'-0"

EXISTING STONE MASONRY REPOINTING NOTES:

1. EXISTING STONE MASONRY WALLS TO REMAIN AND BE REPOINTED.
2. ALL DELETERIOUS MORTAR SHALL BE COMPLETELY REMOVED FROM THE JOINTS. THE JOINTS SHALL BE THOROUGHLY CLEANED OF ALL DIRT AND DEBRIS PRIOR TO REPOINTING. FLUSH JOINT WITH POTABLE WATER TO A SURFACE SATURATED CONDITION. ENTIRELY FILL ALL GAPS BETWEEN STONES WITH MORTAR.
3. MORTAR FOR REPOINTING SHALL BE TYPE S AND SHALL MATCH EXISTING MORTAR COLOR.
4. REPOINTING OF MORTAR JOINTS SHOWN ARE APPROXIMATE AND BASED ON FIELD INVESTIGATIONS. CONTRACTOR SHALL FIELD SURVEY REPAIR AREAS AND FINAL LOCATIONS OF JOINT REPOINTING SHALL BE APPROVED BY THE ENGINEER DURING CONSTRUCTION. ALL COSTS FOR REPOINTING MORTAR JOINTS, INCLUDING, BUT NOT LIMITED TO, FIELD SURVEY AND PROVIDING ACCESS TO THE ENGINEER SHALL BE INCLUDED UNDER ITEM 691 – "BALANCE STONE WALL REMOVED AND REBUILT".

EXISTING CONCRETE REPAIR NOTES:

1. IMMEDIATELY PRIOR TO PLACING NEW CONCRETE AGAINST EXISTING CONCRETE, CLEAN EXISTING SURFACES AND APPLY BONDING COMPOUND.
2. TYPE A REPAIRS SHALL BE PAID UNDER ITEM 127.1 – "REINFORCED CONCRETE EXCAVATION" AND ITEM 905.2 – "5000 PSI, 3/8 INCH, 710 HP CEMENT CONCRETE". TYPE B REPAIRS SHALL BE PAID UNDER ITEM 909.2 – "CEMENTITIOUS MORTAR FOR PATCHING",
3. ALL EXISTING SURFACES THAT WILL HAVE NEW CONCRETE CAST AGAINST IT SHALL BE ROUGHENED TO A MINIMUM AMPLITUDE OF 1/4".
4. REINFORCING STEEL THAT HAS LOST MORE THAN 25% OR MORE OF THEIR ORIGINAL DIAMETER SHALL BE SUPPLEMENTED BY NEW BARS SPLICED IN PLACE. NEW BARS CONSIDERED MAIN REINFORCEMENT SHALL BE EXTENDED BEYOND THE AFFECTED AREA IN EACH DIRECTION BY REQUIRED LAP LENGTHS (30 BAR DIAMETERS).
5. CONCRETE REPAIR WORK INCLUDES REMOVING ALL DETERIORATED, LOOSE, SPALLED, POPCORNED AND/OR MAP CRACKED CONCRETE. REINFORCING STEEL REPAIR WORK INCLUDES REPLACEMENT OF DETERIORATED REINFORCING, AND CLEANING OF EXPOSED SURFACE AND REINFORCING BAR AS DIRECTED BY THE ENGINEER.
6. THE DEPTH OF CONCRETE REMOVAL SHALL NOT EXCEED 3" (OR 1" BEHIND REINFORCING STEEL) WITHOUT FURTHER DIRECTION FROM THE ENGINEER.

DATE	DESCRIPTION
9/6/2025	ISSUED FOR CONSTRUCTION

THIS SHEET IS APPROVED FOR CONSTRUCTION BY MASSDOT
AUTHORIZED SIGNATORY: STATE BRIDGE ENGINEER
USE ONLY PRINTS OF LATEST DATE

BR18(E10011) WALLDET.DWG Plotted on 18-Aug-2025 5:08 PM
2-MAY-2025
PSE DESIGN SUBMISSION REV. 1

ERVING
CHURCH STREET

STATE	FED. AID PROJ. NO.	SHEET NO.	TOTAL SHEETS
MA	NHP(BNNHS)-0032(050)X	31	33
PROJECT FILE NO.	612982		

WATER HANDLING PLAN

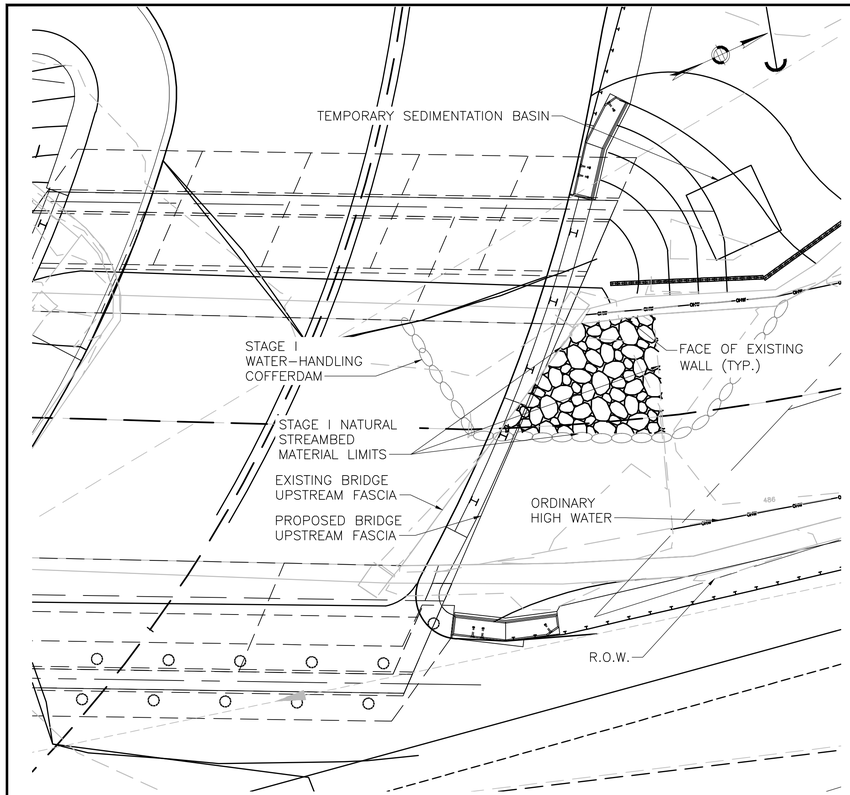

WATER HANDLING PLAN – STAGE I

SCALE: 1" = 5'

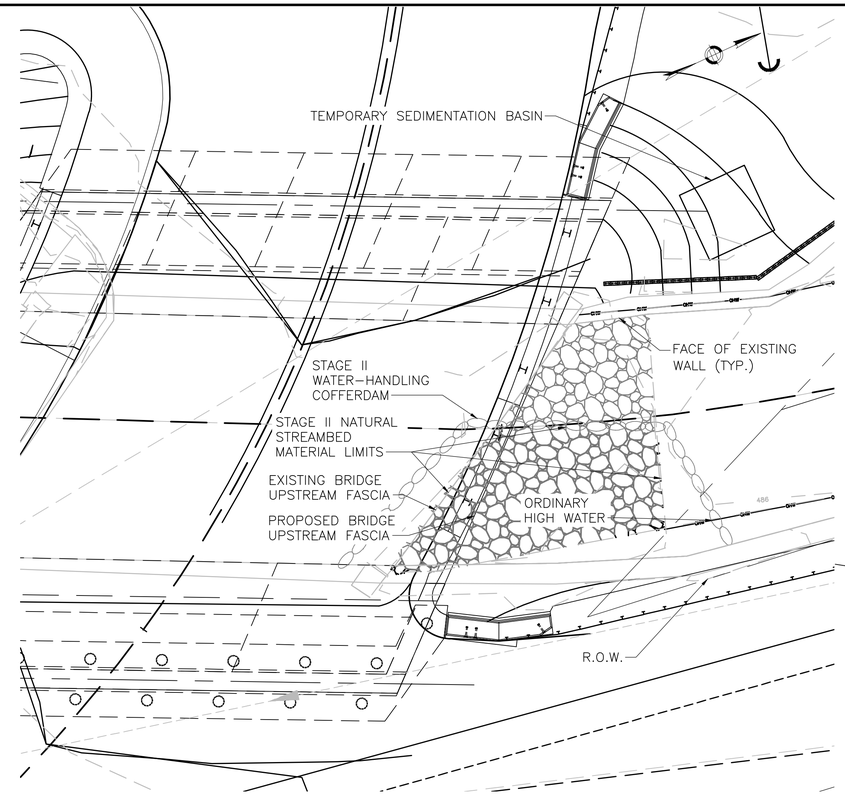

WATER HANDLING PLAN – STAGE II

SCALE: 1" = 5'

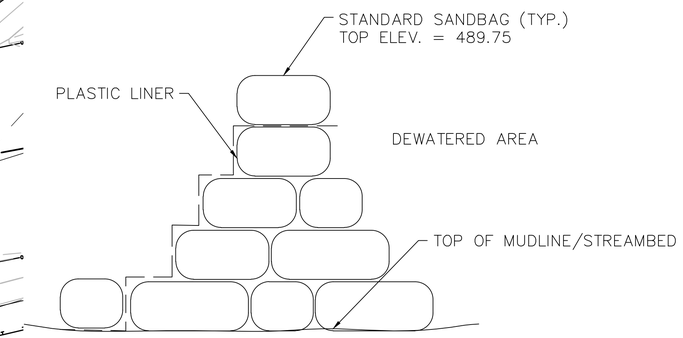

WATER–HANDLING COFFERDAM SECTION

NOT TO SCALE

NOTES:

1. CONTRACTOR SHALL MAINTAIN THE WATER HANDLING SYSTEM AS REQUIRED DURING INSTALLATION OF THE NATURAL STREAMBED MATERIAL.
2. A DEWATERING BASIN SHALL BE ESTABLISHED OUTSIDE OF THE WETLAND LIMITS.
3. TEMPORARY WATER HANDLING COFFERDAM SHALL CONSIST SANDBAGS OR ANOTHER APPROVED SYSTEM THAT THE CONTRACTOR ELECTS TO USE WHICH WILL SAFELY CONVEY WATER FLOWS THROUGH THE CONSTRUCTION AREA, SHALL BE ABLE TO SUPPORT CONSTRUCTION ACTIVITY AND EXCAVATION AND SHALL CONFORM TO PERMITS. ANY MEANS AND METHODS FOR THE WATER HANDLING SYSTEM MUST BE SUBMITTED BY THE CONTRACTOR TO THE ENGINEER FOR APPROVAL.
4. ANY STORM DRAINAGE DISCHARGING INTO A CONFINED WORK AREA FROM EXISTING STORM DRAINAGE PIPES SHALL BE DIVERTED OR PUMPED OUTSIDE THE CONFINED AREAS. PUMPS/PIPES SHALL BE SIZED BY CONTRACTOR TO HANDLE THE EXPECTED FLOWS AND BE DISCHARGED TO A STABLE LOCATION. THE CONTRACTOR SHALL SUBMIT THE MEANS AND METHODS OF WATER HANDLING STORM DRAINAGE FOR APPROVAL AND IS INCLUDED IN WATER HANDLING.
5. SEE GENERAL NOTES (SHEET NO. 2) FOR TEMPORARY WATER CONTROL DESIGN DATA.

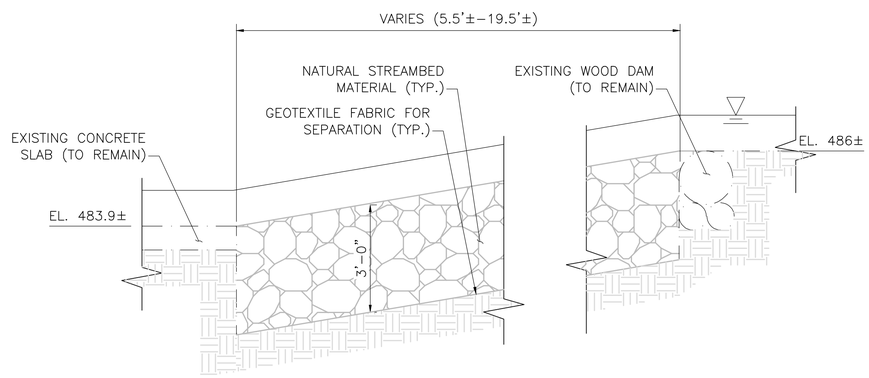

CHANNEL LONGITUDINAL SECTION

SCALE: ½" = 1'–0"

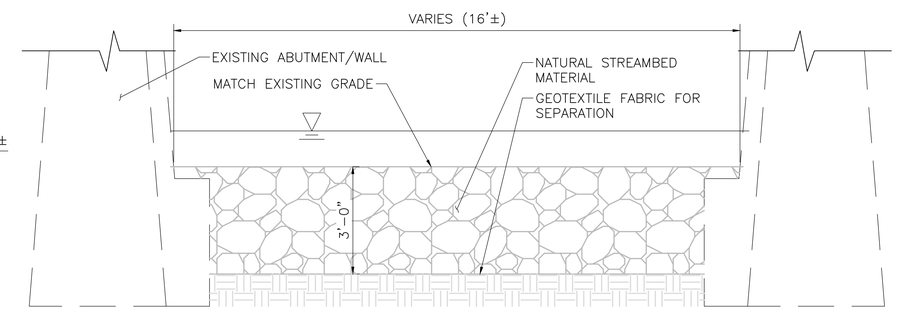

CHANNEL TRANSVERSE SECTION

SCALE: ½" = 1'–0"

9/6/2025	ISSUED FOR CONSTRUCTION
DATE	DESCRIPTION

THIS SHEET IS APPROVED FOR CONSTRUCTION BY MASSDOT
AUTHORIZED SIGNATORY: STATE BRIDGE ENGINEER

USE ONLY PRINTS OF LATEST DATE

BR19(E10011)WTRHNDL_RECOVER.DWG Plotted on 18-Aug-2025 5:09 PM
2-MAY-2025
PSE DESIGN SUBMISSION REV. 1

ERVING
CHURCH STREET BRIDGE REPLACEMENT

STATE	FED. AID PROJ. NO.	SHEET NO.	TOTAL SHEETS
MA	NHP(BNNHS)-0032(050)X	32	33
PROJECT FILE NO.	612982		

CROSS SECTIONS

11+50

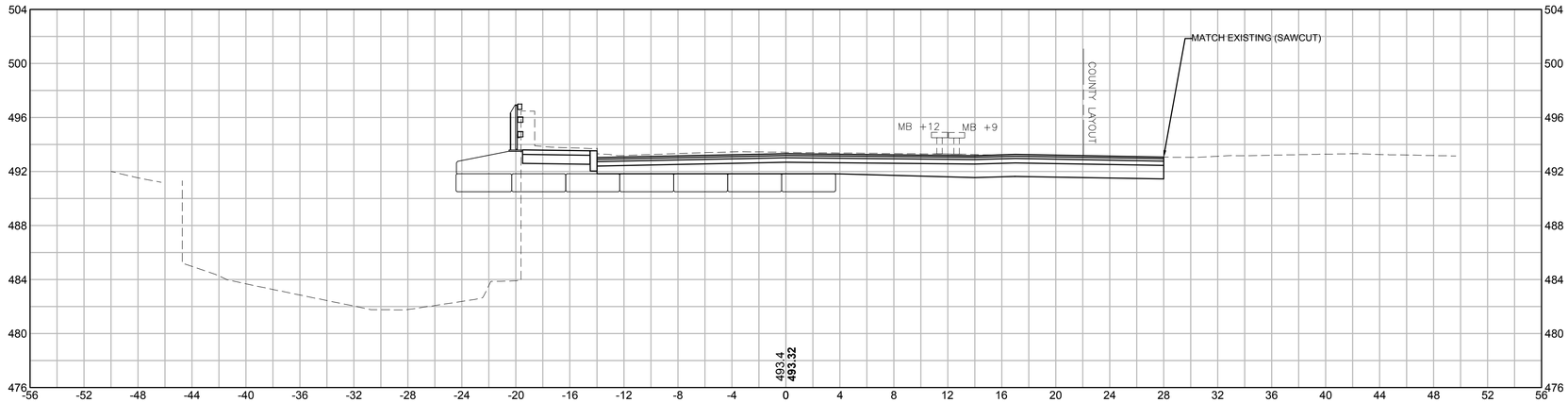

Cut: 99.14 S.F.
Fill: 0.00 S.F.

11+00

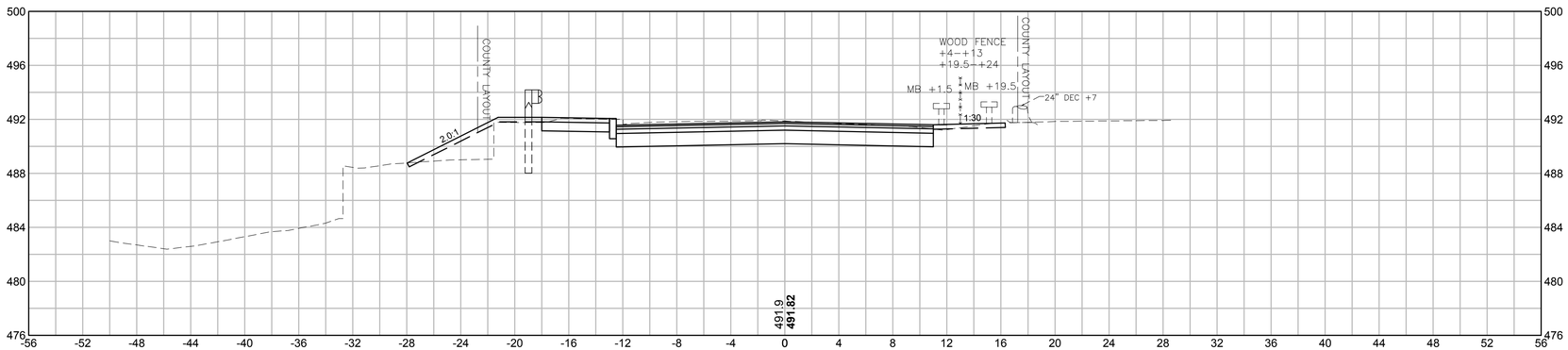

Cut: 45.35 S.F.
Fill: 11.50 S.F.

10+70

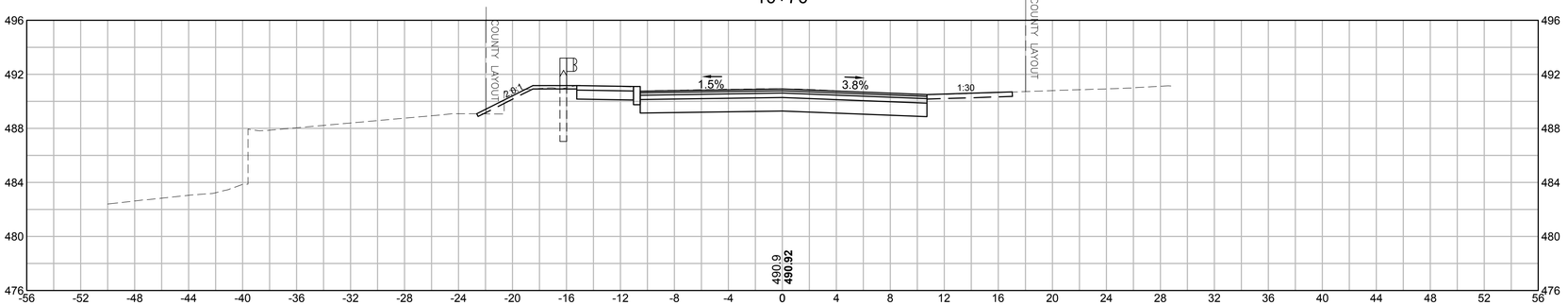

Cut: 42.73 S.F.
Fill: 1.67 S.F.

HOR. SCALE IN FEET
5 0 5 10
5 0 5 10
VER. SCALE IN FEET

612982_HD30-31(CROSS SECTIONS).DWG Plotted on 18-Aug-2025 3:09 PM

ERVING
CHURCH STREET BRIDGE REPLACEMENT

STATE	FED. AID PROJ. NO.	SHEET NO.	TOTAL SHEETS
MA	NHP(BNNHS)-0032(050)X	33	33
PROJECT FILE NO.	612982		

CROSS SECTIONS

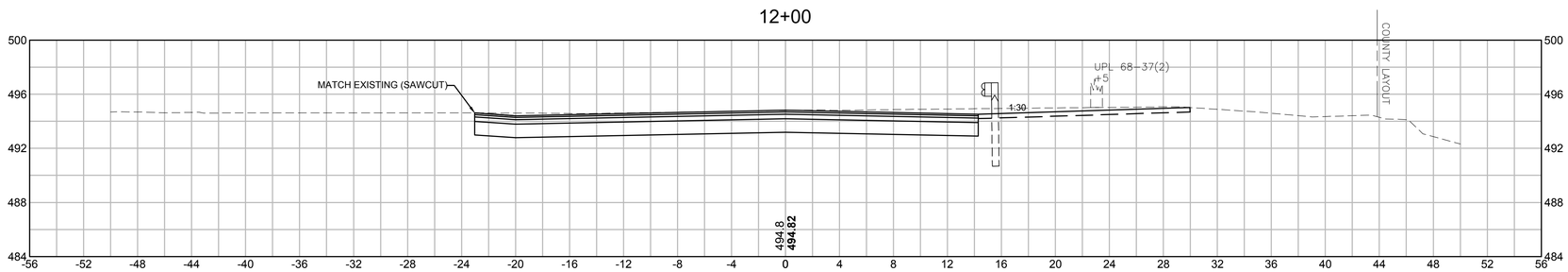

Cut: 73.40 S.F.
Fill: 0.00 S.F.

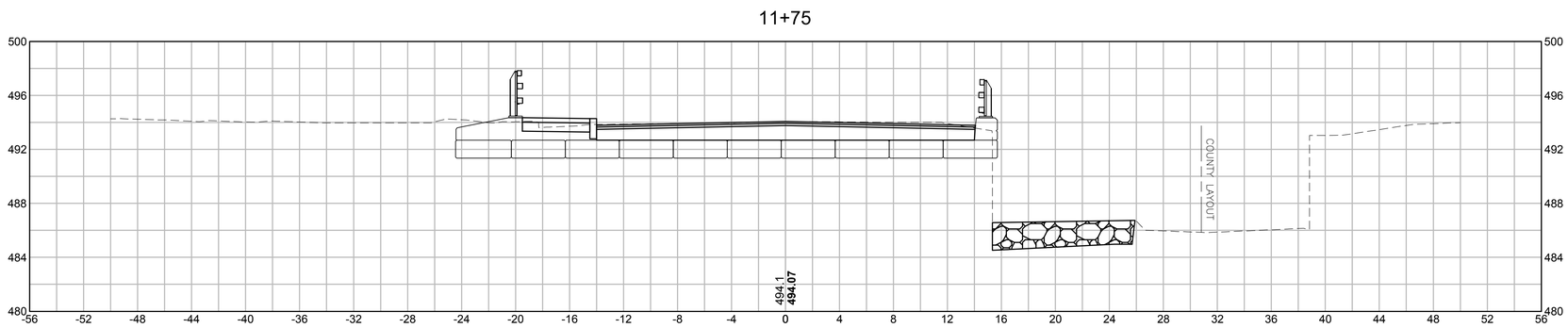

Cut: 69.70 S.F.
Fill: 0.00 S.F.

HOR. SCALE IN FEET
5 0 5 10
5 0 5 10
VER. SCALE IN FEET

Plotted on 18-Aug-2025 3:09 PM
612982_HD30-31(CROSS SECTIONS).DWG