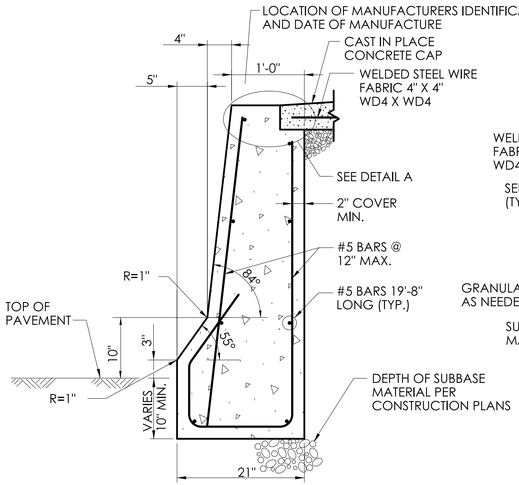

SECTION A

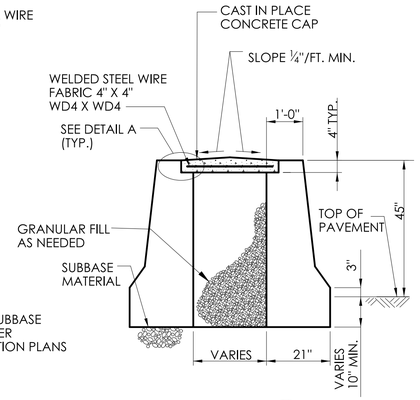

SECTION B

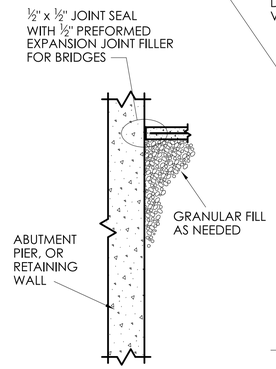

SECTION C

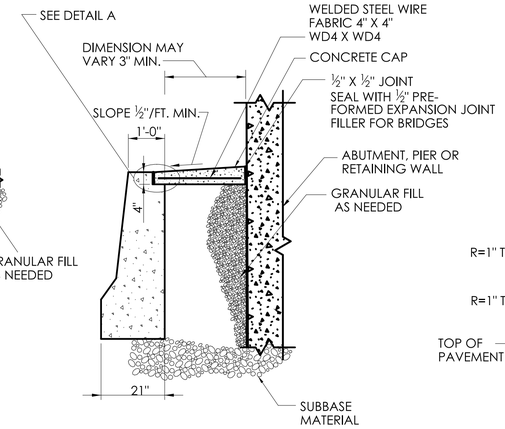

SECTION D

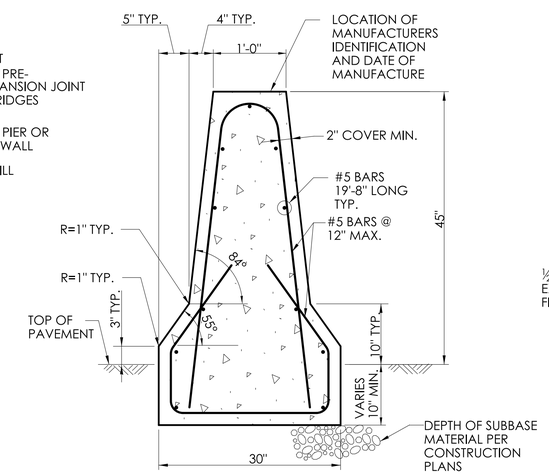

SECTION E

GENERAL NOTE:

1. ALTERNATE DESIGNS FOR THE FOLLOWING ITEMS SHALL BE SUBMITTED TO THE ENGINEER FOR APPROVAL:

   A) UNIT END CONNECTIONS SIMILAR TO DESIGNS SHOWN.

   B) LIFTING KEYS OR OTHER HANDLING DEVICES.

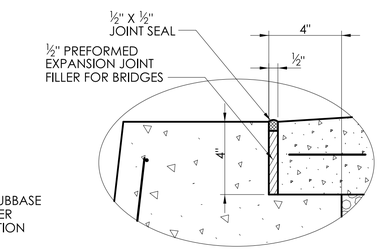

DETAIL A

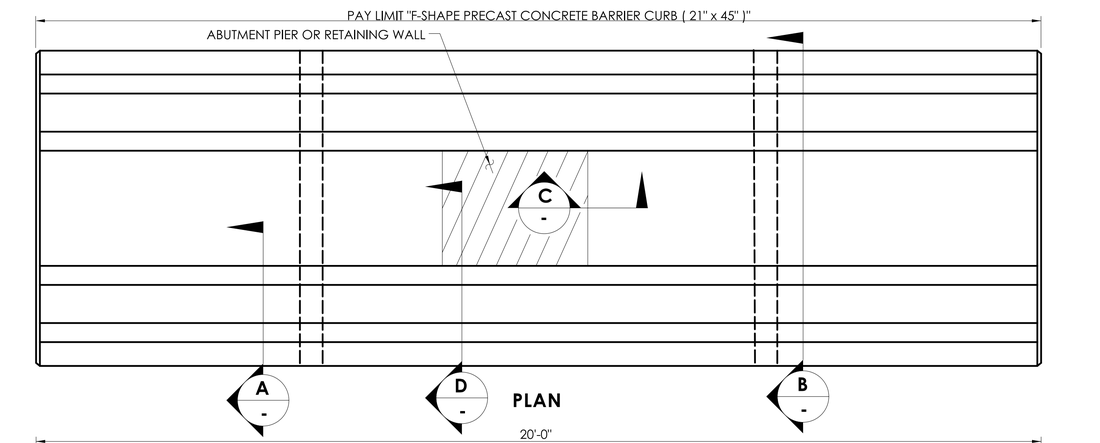

PLAN

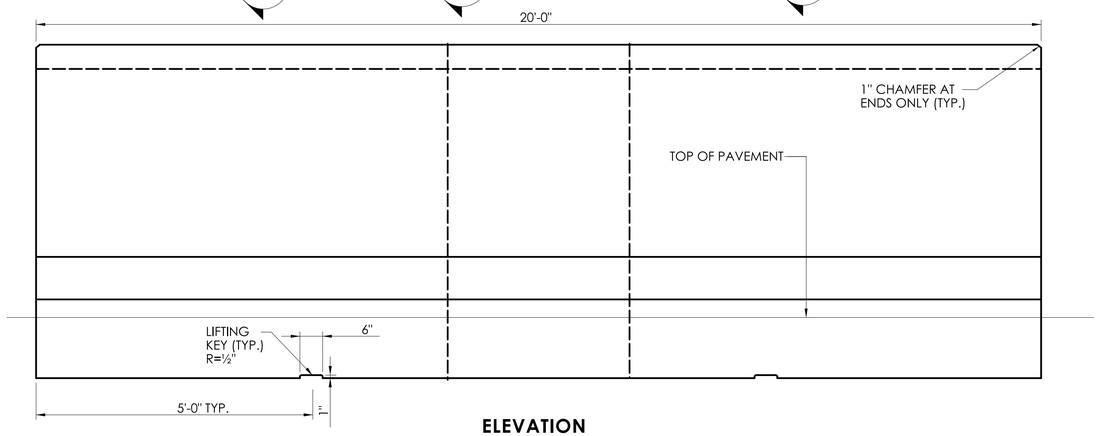

ELEVATION

45" HIGH F-SHAPE PRECAST CONCRETE BARRIER CURB UNIT FOR MEDIAN, MEDIAN WITH PIER ABUTMENT OR RETAINING WALL APPLICATION

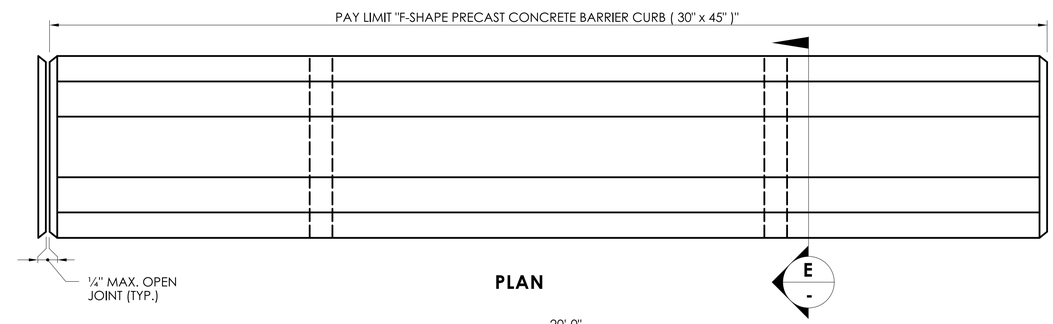

PLAN

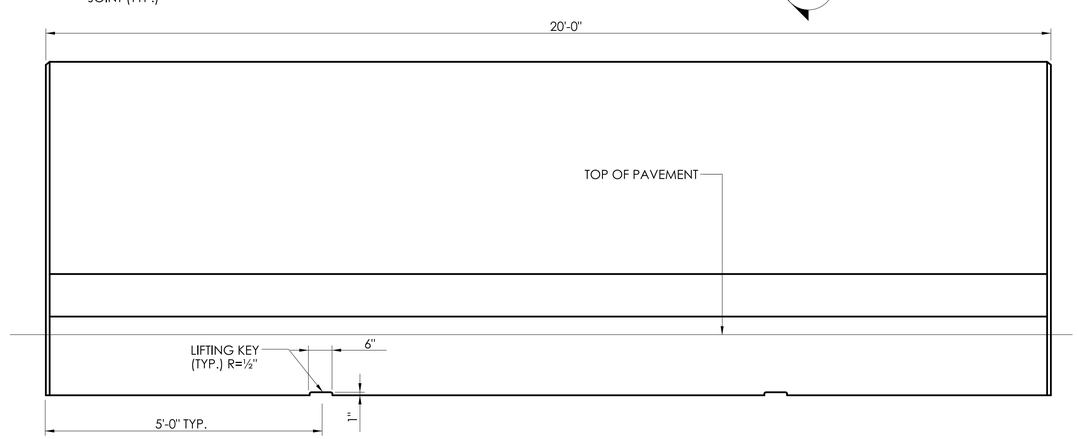

ELEVATION

45" HIGH F-SHAPE PRECAST CONCRETE BARRIER CURB UNIT FOR ROADSIDE APPLICATION

MASH 2016 COMPLIANT
APPROVAL ID. 2019-02

	NOT TO SCALE	SIGNATURE BLOCK: OFFICE OF ENGINEERING 2800 BERLIN TURNPIKE NEWINGTON, CT 06111	SUBMITTED BY: Digitally signed by Leo Fontaine, P.E. Date: 2024.12.16 14:08:14-05'00'	APPROVED BY: Digitally signed by Michael N. Calabrese, P.E. Date: 2025.01.21 13:20:12-05'00'	CTDOT CONNECTICUT DEPARTMENT OF TRANSPORTATION	CTDOT STANDARD SHEET	STANDARD SHEET TITLE: 45" F-SHAPE PRECAST CONCRETE BARRIER CURB SHEET 1	STANDARD SHEET NO.: HW-821_02a

PLOTTED DATE: 10/22/2024