GENERAL NOTES:

1. ALL DIMENSIONS ARE SUBJECT TO MANUFACTURERS TOLERANCE.
2. SEE SHEETS HW-586_10a, AND HW-586_10b FOR MANHOLE FRAME, GRATE AND COVER DETAIL.

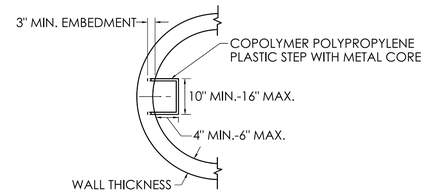

STEP DETAIL

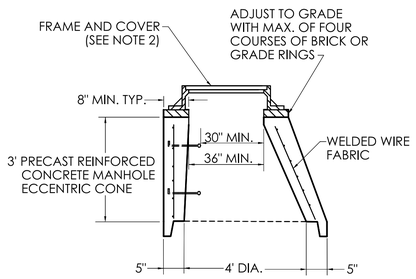

ECCENTRIC CONE SECTION

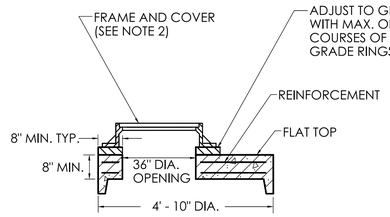

FLAT SLAB TOP FOR RISER SECTION

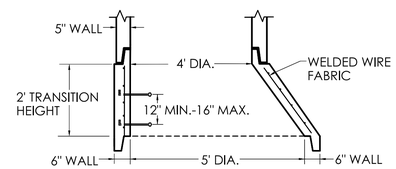

TRANSITION SECTION

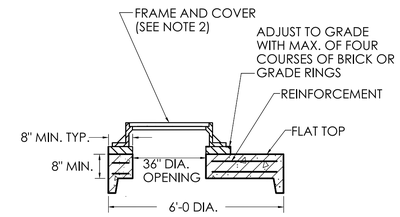

FLAT SLAB TOP FOR RISER SECTION

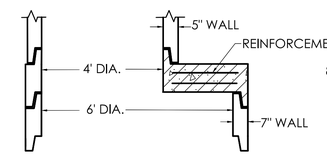

REDUCER SECTION

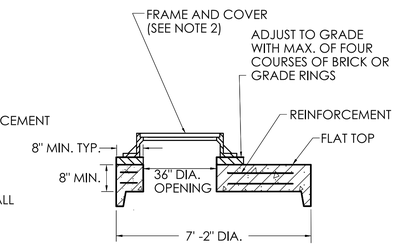

FLAT SLAB TOP FOR RISER SECTION

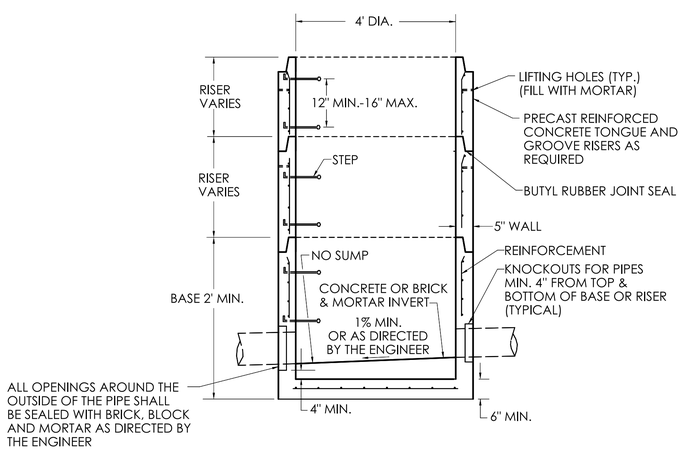

4' DIAMETER REINFORCED PRECAST CONCRETE MANHOLE SECTION

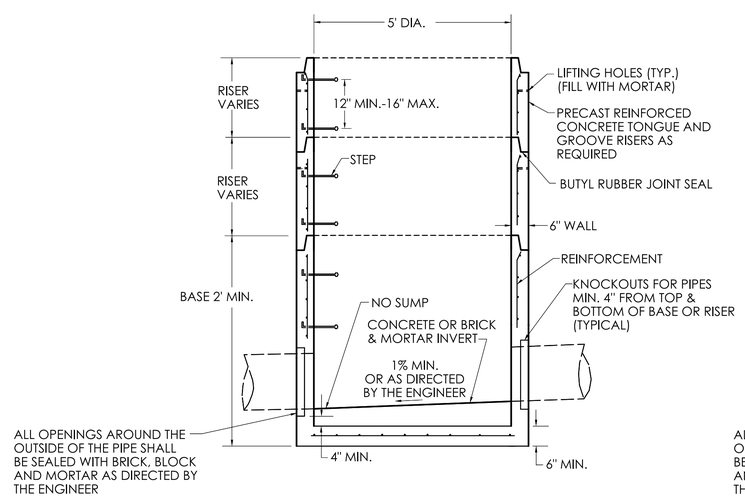

5' DIAMETER REINFORCED PRECAST CONCRETE MANHOLE SECTION

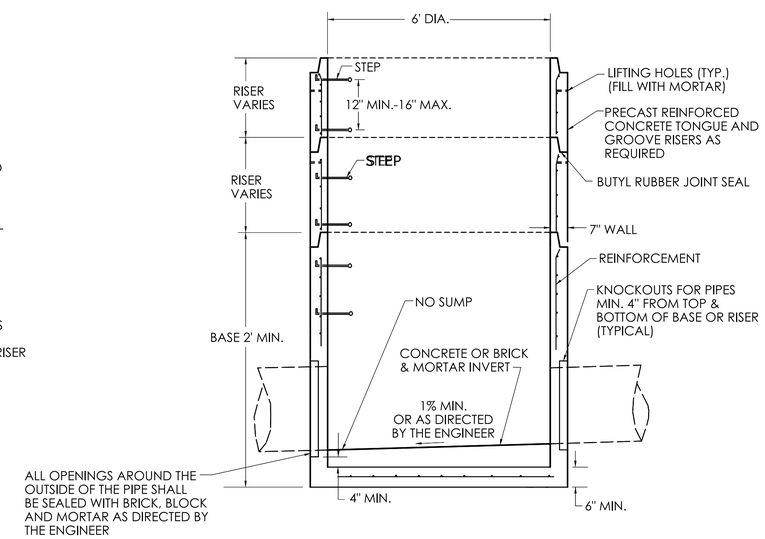

6' DIAMETER REINFORCED PRECAST CONCRETE MANHOLE SECTION

	NOT TO SCALE	SIGNATURE BLOCK: OFFICE OF ENGINEERING 2800 BERLIN TURNPIKE NEWINGTON, CT 06111	SUBMITTED BY: Digitally signed by Leo Fontaine, P.E. Date: 2024.12.16 10:15:25-05'00'	APPROVED BY: Digitally signed by Michael N. Calabrese, P.E. Date: 2025.01.21 13:04:29-05'00'	CTDOT CONNECTICUT DEPARTMENT OF TRANSPORTATION	CTDOT STANDARD SHEET	STANDARD SHEET TITLE: REINFORCED PRECAST CONCRETE MANHOLE	STANDARD SHEET NO.: HW-586_10c

PLOTTED DATE: 10/22/2024