GENERAL NOTES:

1. LOCK DOWN DEVICES SHALL BE INSTALLED AND MAINTAINED WHEN TRAFFIC WILL BE TRAVELING OVER CATCH BASIN WITH TYPE "A" GRATES OR TYPE "B" GRATES AS DIRECTED BY THE ENGINEER.
2. FOR FRAMES AND GRATES DETAILS, SEE SHEET NO. HW-586_08
3. 4" BITUMINOUS CONCRETE PARK CURBING SHOWN FOR THE "C" TOP.

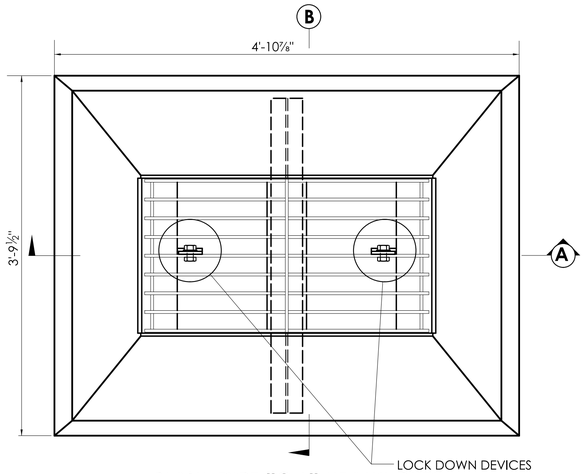

PLAIN-TYPE "C-L" HEAVY DUTY CATCH BASIN TOP

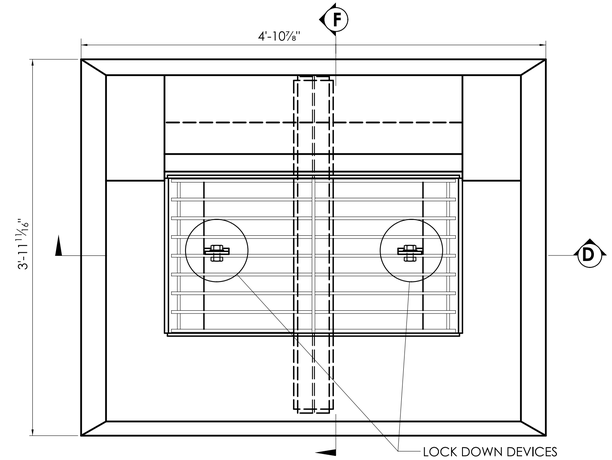

PLAIN-TYPE "C" HEAVY DUTY CATCH BASIN TOP

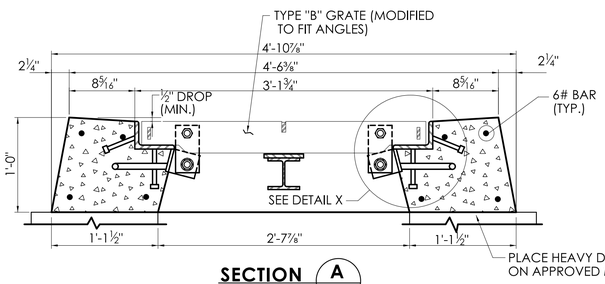

SECTION A

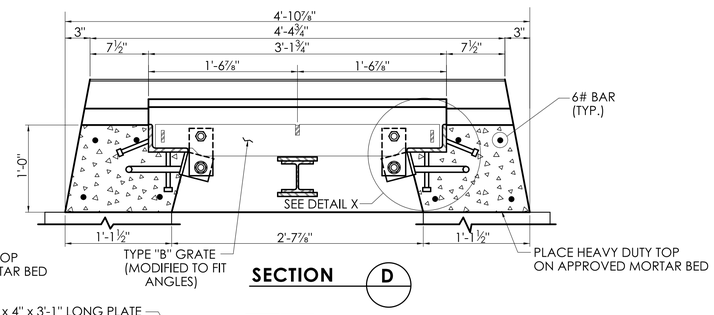

SECTION D

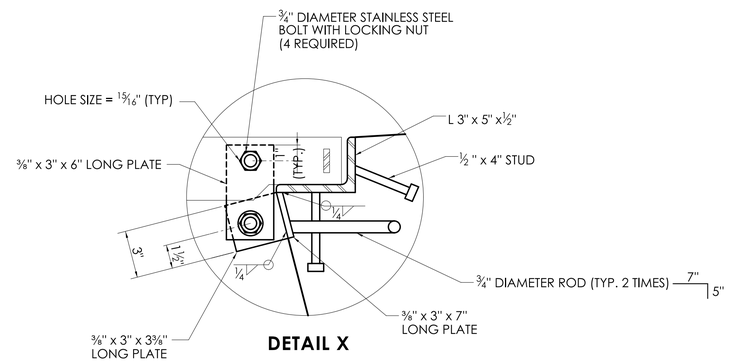

DETAIL X

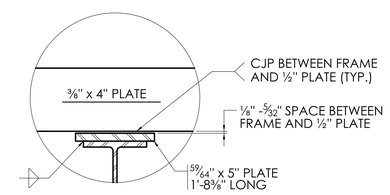

DETAIL Y

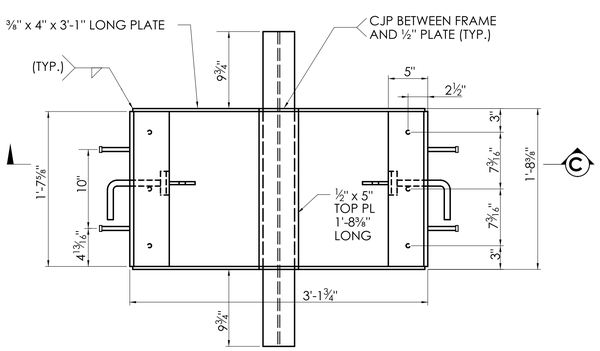

PLAIN - TYPE "C-L" FRAME

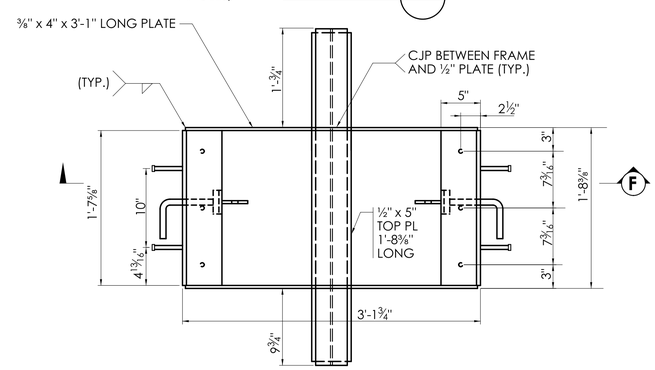

PLAIN - TYPE "C" FRAME

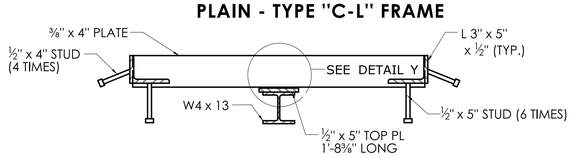

SECTION C

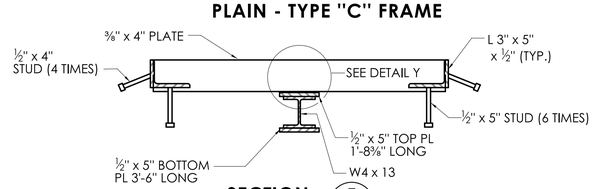

SECTION F

TYPE "C-L" HEAVY DUTY CATCH BASIN FRAME

TYPE "C" HEAVY DUTY CATCH BASIN FRAME

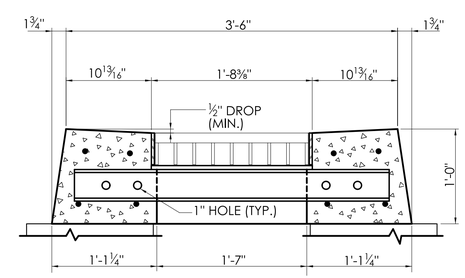

SECTION B

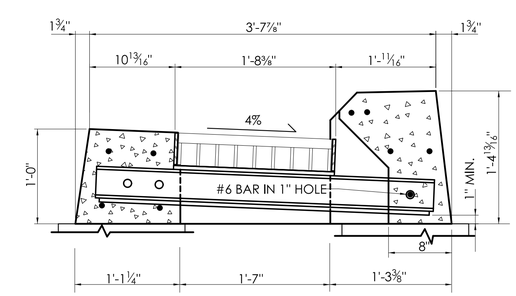

SECTION F

	NOT TO SCALE	SIGNATURE BLOCK: OFFICE OF ENGINEERING 2800 BERLIN TURNPIKE NEWINGTON, CT 06111	SUBMITTED BY: Digitally signed by Leo Fontaine, P.E. Date: 2024.12.16 10:16:03-05'00'	APPROVED BY: Digitally signed by Michael N. Calabrese, P.E. Date: 2025.01.21 13:03:01-05'00'	CTDOT CONNECTICUT DEPARTMENT OF TRANSPORTATION	CTDOT STANDARD SHEET	STANDARD SHEET TITLE: CATCH BASIN LOCK DOWN TOPS	STANDARD SHEET NO.: HW-586_09

PLOTTED DATE: 10/22/2024