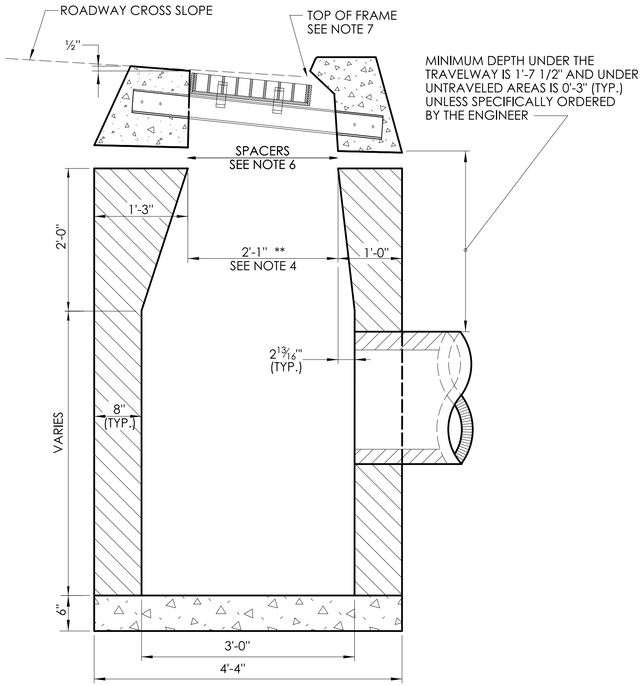

SECTION B

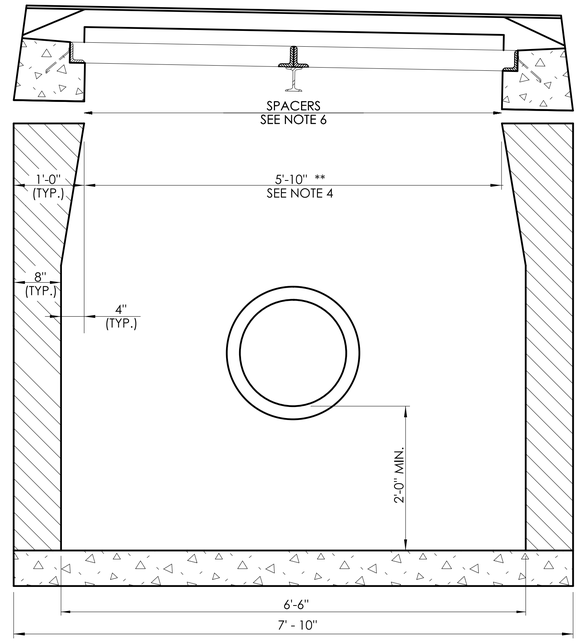

SECTION A

TYPE "C" CATCH BASIN DOUBLE GRATE - TYPE II

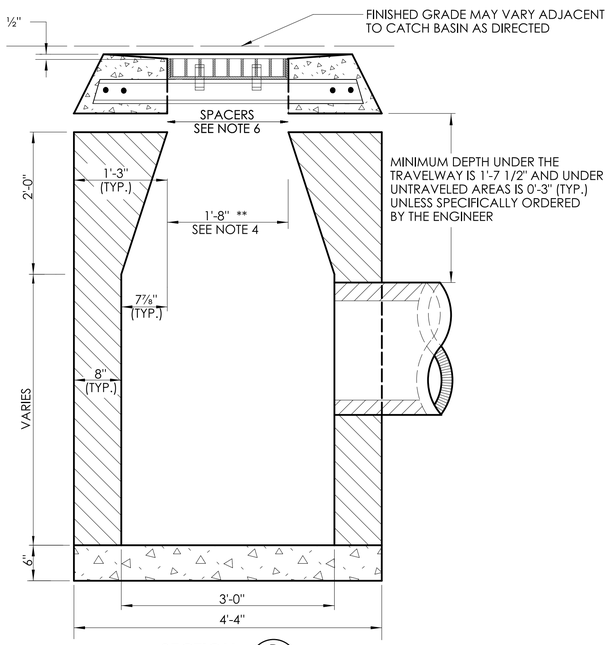

SECTION B

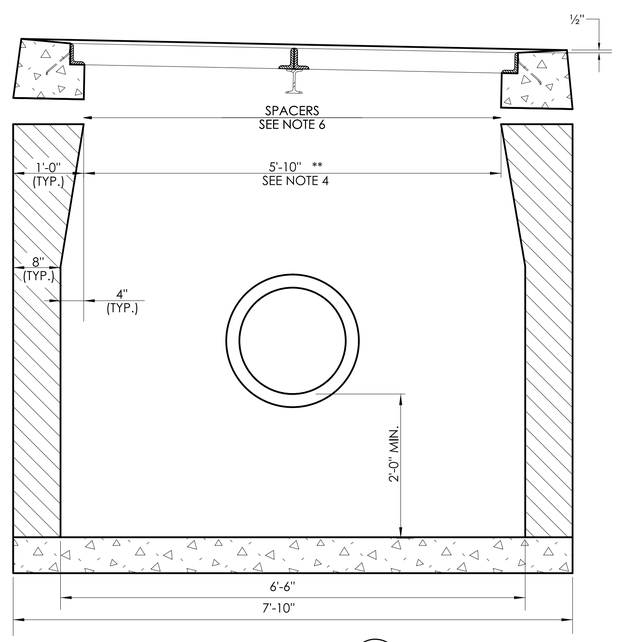

SECTION A

TYPE "C-L" CATCH BASIN DOUBLE GRATE - TYPE II

GENERAL NOTES:

1. FOR CATCH BASIN TOPS, SEE SHEET NO. HW-586_07.
2. ALL THE FACES OF THE STRUCTURE IN CONTACT WITH CONCRETE PAVEMENT SHALL BE COVERED WITH A LAYER OF TAR PAPER OR APPROVED EQUAL.
3. USE 6'-0" ON UPGRADE SIDE (SEE PLAN VIEW) OF CONTINUOUS GRADE AND 1'-0" ON DOWNGRADE SIDE OF CONTINUOUS GRADE AS DIRECTED BY THE ENGINEER.
4. IF MASONRY UNITS ARE REQUIRED, THE BASIN SHALL BE CONSTRUCTED IN CONFORMANCE WITH DIMENSIONS SHOWN. CORBELLING SHALL BE PERMITTED TO A MAXIMUM OF 3". NO PROJECTION SHALL EXTEND INSIDE THE LIMITS NOTED BY **.
5. WALL THICKNESS OF ALL CATCH BASINS OVER 10' DEEP SHALL BE INCREASED TO 12" THICK. INSIDE DIMENSION SHALL REMAIN THE SAME. 12" THICKNESS SHALL START AFTER THE FIRST 10'.
6. FOR GRADE ADJUSTMENT OF THE CATCH BASIN TOP (TO MATCH THE ROADWAYS' PROFILE AND CROSS-SLOPE SHOWN ON THE PLANS) USE; SPACERS EITHER CONCRETE MASONRY UNIT OR PRECAST WITH THE REQUIRED REINFORCING (RECOMMENDED BY THE MANUFACTURER) COMBINED WITH MORTAR AS NEEDED TO PROVIDE THE PROPER GRADE ADJUSTMENTS.
7. TOP OF FRAME ELEVATION SHALL BE MEASURED IN BETWEEN BOTH GRATES AT THE GUTTER.

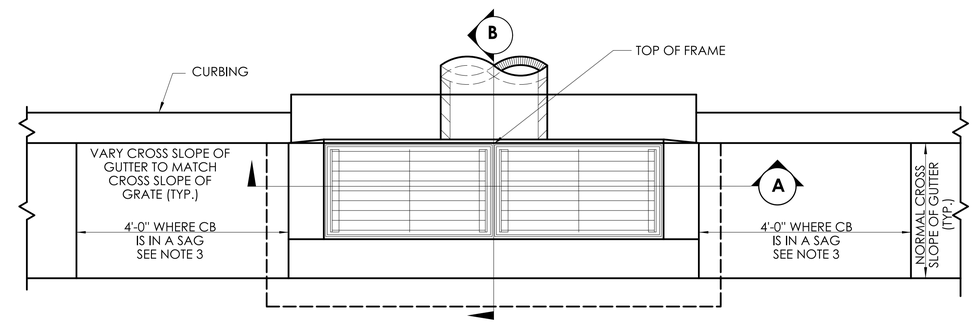

PLAN

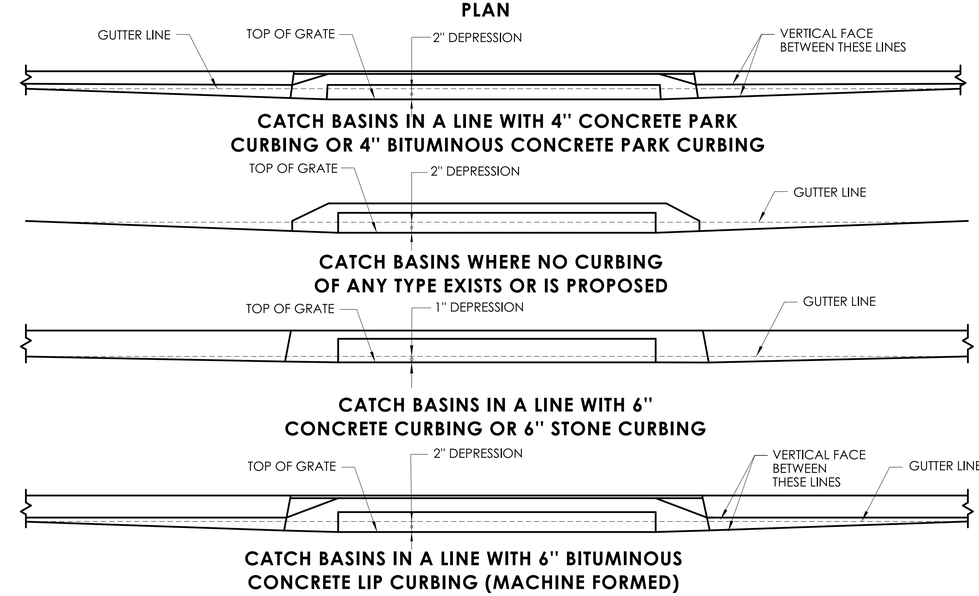

DETAILS OF DEPRESSED GUTTER STRIP
FOR TYPE "C" CATCH BASIN DOUBLE GRATE TYPE II

	NOT TO SCALE	SIGNATURE BLOCK: OFFICE OF ENGINEERING 2800 BERLIN TURNPIKE NEWINGTON, CT 06111	SUBMITTED BY: Digitally signed by Leo Fontaine, P.E. Date: 2024.12.16 10:01:03-05'00'	APPROVED BY: Digitally signed by Michael N. Calabrese, P.E. Date: 2025.01.21 12:38:31-05'00'	CTDOT CONNECTICUT DEPARTMENT OF TRANSPORTATION	CTDOT STANDARD SHEET	STANDARD SHEET TITLE: CATCH BASIN (TYPES "C" AND "C-L") FOR DOUBLE GRATE TYPE II STRUCTURES	STANDARD SHEET NO.: HW-586_03

PLOTTED DATE: 10/22/2024