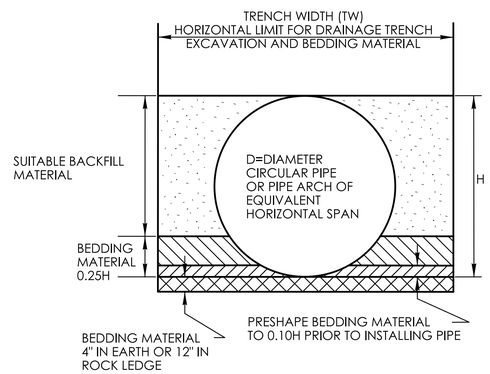

PIPE TRENCH
FOR PIPES LESS THAN 48"

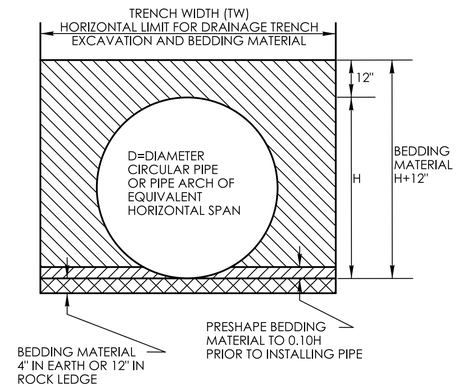

PIPE TRENCH
FOR PIPES GREATER THAN
OR EQUAL TO 48"

TRENCH WIDTH (TW) CHART

PIPE, PIPE-ARCH, OR DRAINAGE STRUCTURE	TRENCH WIDTH
PIPE OR PIPE-ARCH WITH NOMINAL INSIDE HORIZONTAL SPAN LESS THAN 30"	2' GREATER THAN NOMINAL INSIDE HORIZONTAL SPAN
PIPE OR PIPE-ARCH WITH NOMINAL INSIDE HORIZONTAL SPAN GREATER THAN OR EQUAL TO 30"	3' GREATER THAN NOMINAL INSIDE HORIZONTAL SPAN
PIPE OR PIPE-ARCH FABRICATED FROM STRUCTURAL PLATES	4' GREATER THAN NOMINAL INSIDE HORIZONTAL SPAN
DRAINAGE STRUCTURES	2' BEYOND ALL EXTERIOR OR FOUNDATION WALLS

NOT TO SCALE

SIGNATURE BLOCK:
OFFICE OF ENGINEERING
2800 BERLIN TURNPIKE
NEWINGTON, CT 06111

SUBMITTED BY:
Digitally signed by Leo Fontaine, P.E.
Date: 2024.12.16 10:12:03-05'00'

APPROVED BY:
Digitally signed by Michael N. Calabrese, P.E.
Date: 2025.01.21 12:25:59-05'00'

CTDOT
CONNECTICUT DEPARTMENT OF TRANSPORTATION

CTDOT STANDARD SHEET

STANDARD SHEET TITLE:
DRAINAGE TRENCH EXCAVATION

STANDARD SHEET NO.:
HW-286_01

PLOTTED DATE: 10/22/2024