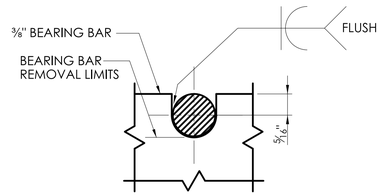

NOTE:
⅝" DIA. ROUND BAR SHALL CONTACT BEARING BAR AT BOTTOM AND BE FLUSH AT TOP.

ROUND BAR ATTACHMENT
CATCH BASIN GRATE TYPE A

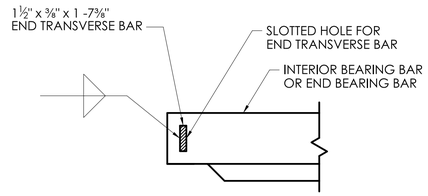

END TRANSVERSE BAR ATTACHMENT
CATCH BASIN GRATE TYPE A AND B

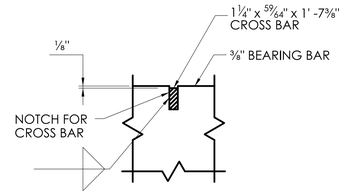

CROSS BAR ATTACHMENT
CATCH BASIN GRATE TYPE B

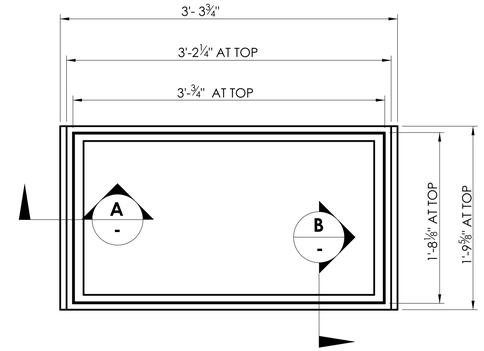

PLAN

GENERAL NOTES:

1. STEEL OR CAST IRON SHALL BE USED FOR FRAMES. STEEL SHALL BE USED FOR TYPE "A" AND "B" GRATES.
2. TYPE "A" GRATES SHALL BE USED ON ALL ROADWAYS WHERE BICYCLE TRAFFIC IS ALLOWED OR ON HEAVY DUTY LOCK DOWN TOPS AS DIRECTED BY THE ENGINEER.
3. TYPE "B" GRATES SHALL BE USED ON ALL LIMITED ACCESS HIGHWAYS, RAMPS AND WHERE BICYCLE TRAFFIC IS NOT ALLOWED OR AS DIRECTED BY THE ENGINEER.
4. DO NOT GALVANIZE CAST IRON FRAMES.
5. DIMENSIONAL TOLERANCES SHALL BE ± 3/16".
6. ALL STEEL BARS SHALL BE WELDED AT ALL INTERSECTIONS.

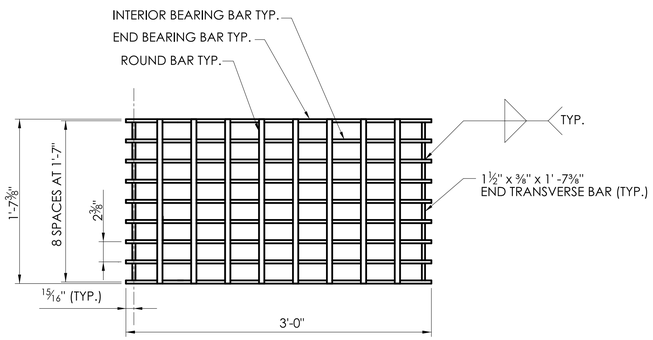

PLAN

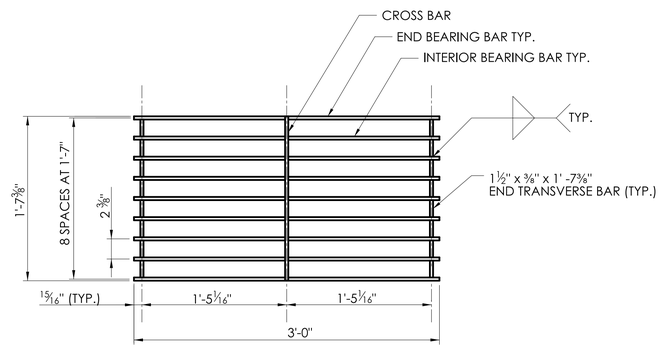

PLAN

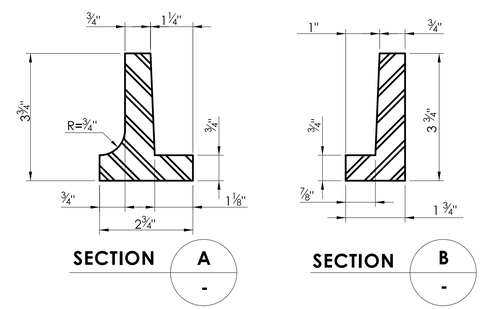

CAST IRON FRAME ALTERNATE

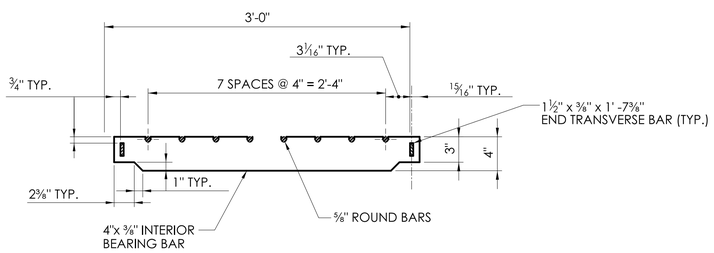

ELEVATION- INTERIOR BEARING BAR

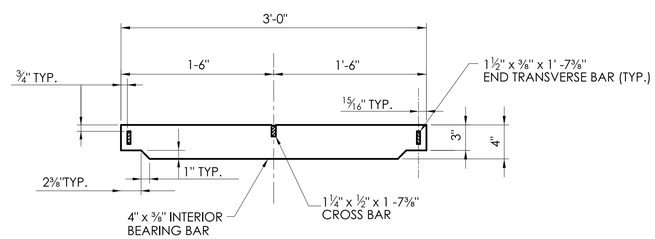

ELEVATION- INTERIOR BEARING BAR

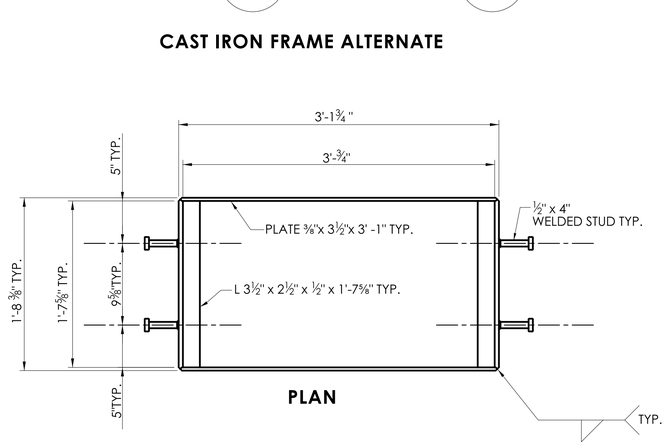

PLAN

WELDED STUD ANCHOR DETAILS
STEEL FRAME

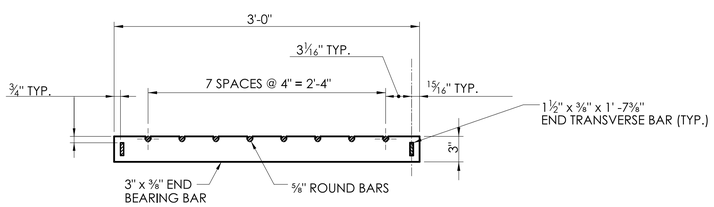

ELEVATION- END BEARING BAR
CATCH BASIN GRATE TYPE A

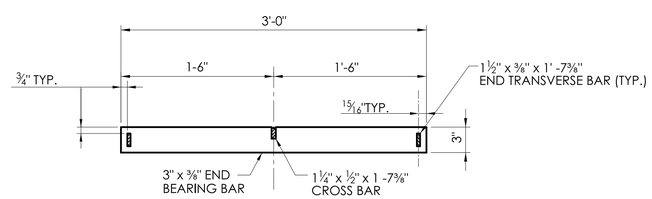

ELEVATION- END BEARING BAR
CATCH BASIN GRATE TYPE B

	NOT TO SCALE	SIGNATURE BLOCK: OFFICE OF ENGINEERING 2800 BERLIN TURNPIKE NEWINGTON, CT 06111	SUBMITTED BY: Digitally signed by Leo Fontaine, P.E. Date: 2024.12.16 10:16:20-05'00'	APPROVED BY: Digitally signed by Michael N. Calabrese, P.E. Date: 2025.01.21 13:02:17-05'00'	CTDOT CONNECTICUT DEPARTMENT OF TRANSPORTATION	CTDOT STANDARD SHEET	STANDARD SHEET TITLE: CATCH BASIN FRAMES AND GRATES	STANDARD SHEET NO.: HW-586_08

PLOTTED DATE: 10/22/2024