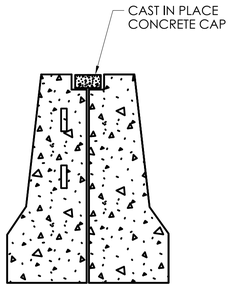

SECTION F -

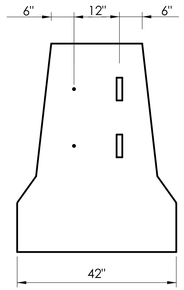

END VIEW G -

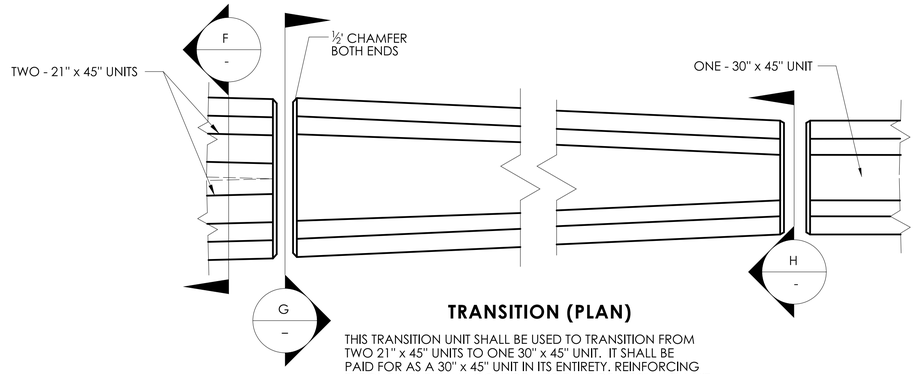

TRANSITION (PLAN)

THIS TRANSITION UNIT SHALL BE USED TO TRANSITION FROM TWO 21" x 45" UNITS TO ONE 30" x 45" UNIT. IT SHALL BE PAID FOR AS A 30" x 45" UNIT IN ITS ENTIRETY. REINFORCING THROUGHOUT SHALL CONFORM TO THAT OF A 30" x 45" UNIT.

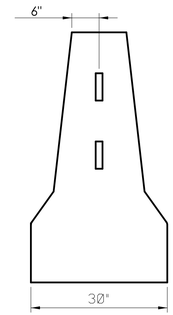

END VIEW H -

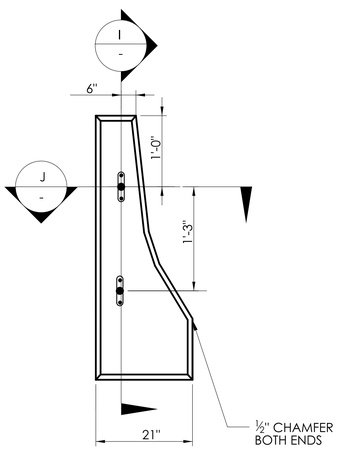

21" x 45" UNIT

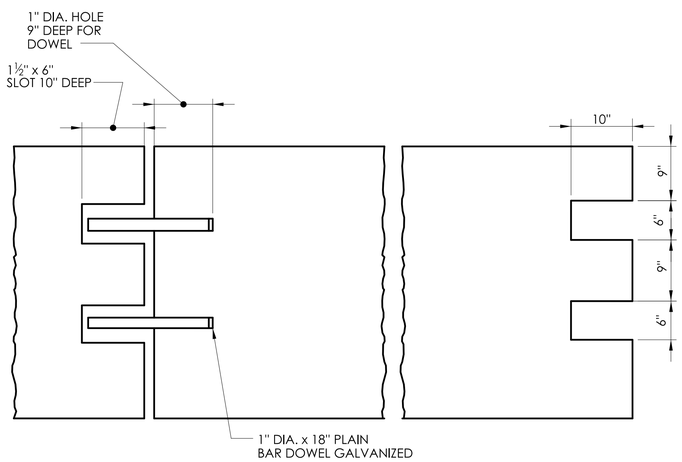

SECTION I - K -

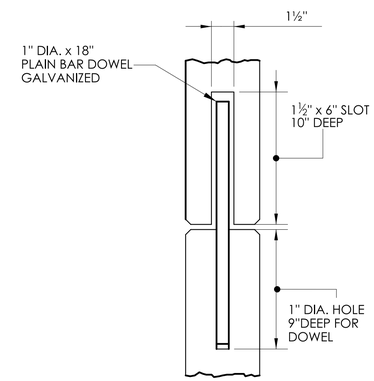

SECTION J - L -

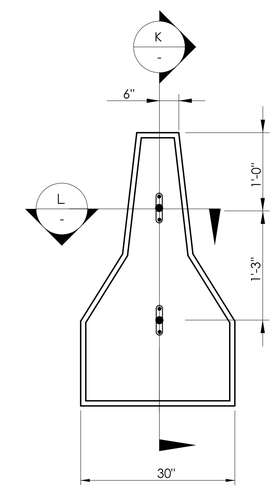

30" x 45" UNIT

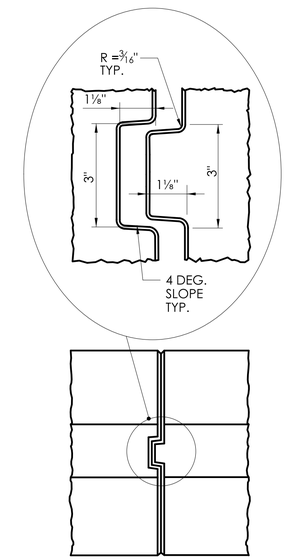

PLAN VIEW 30" x 45" UNIT
ALTERNATIVE CONNECTION AT ENDS

	NOT TO SCALE	SIGNATURE BLOCK: OFFICE OF ENGINEERING 2800 BERLIN TURNPIKE NEWINGTON, CT 06111	SUBMITTED BY: Digitally signed by Leo Fontaine, P.E. Date: 2024.12.16 14:07:58-05'00'	APPROVED BY: Digitally signed by Michael N. Calabrese, P.E. Date: 2025.01.21 13:21:10-05'00'	CTDOT CONNECTICUT DEPARTMENT OF TRANSPORTATION	CTDOT STANDARD SHEET	STANDARD SHEET TITLE: 45" F-SHAPE PRECAST CONCRETE BARRIER CURB SHEET 2	STANDARD SHEET NO.: HW-821_02b

PLOTTED DATE: 10/22/2024