GENERAL NOTES:

1. OBJECT MARKER SHALL BE INSTALLED ADJACENT TO UNDERDRAIN OUTS WITH MARKER FACING PARALLEL TO THE DIRECTION OF TRAFFIC (SEE HW-930_01 OBJECT MARKER).
2. REINFORCING BARS SHALL HAVE A 1½" MIN. COVER.

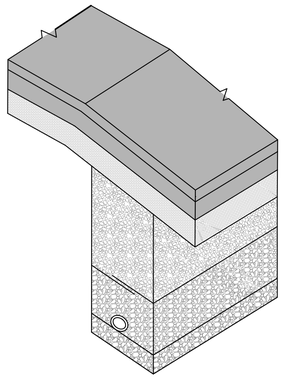

UNDERDRAIN

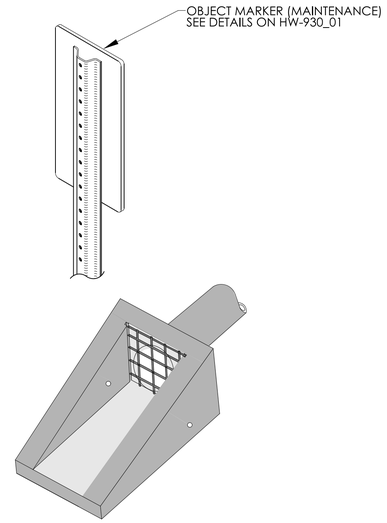

CONCRETE OUTLET FOR UNDERDRAIN

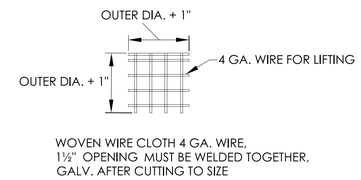

GALVANIZED GRATE

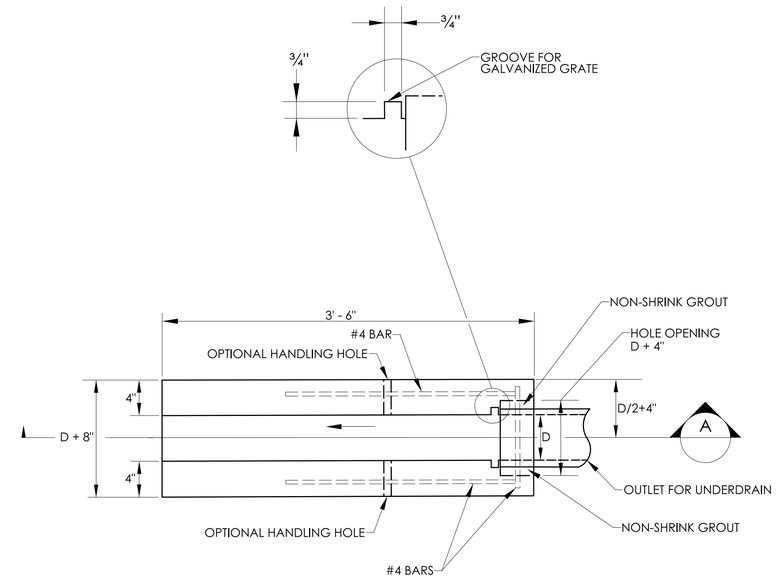

PLAN
CONCRETE OUTLET FOR UNDERDRAIN

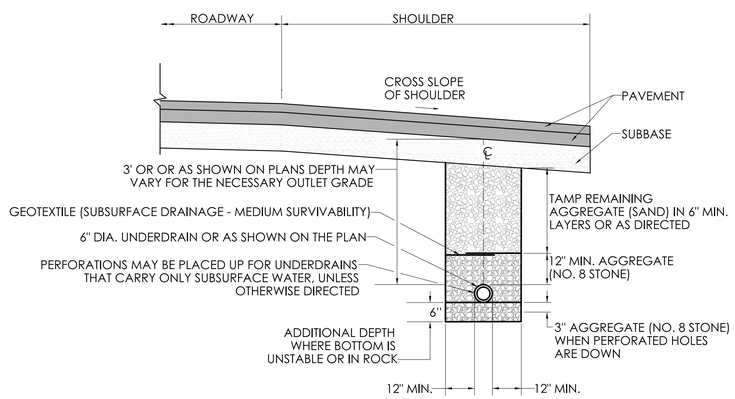

SECTION

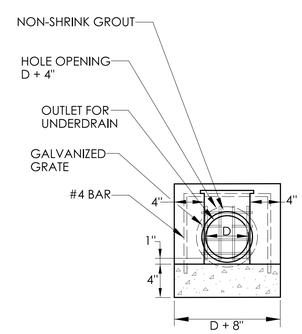

ELEVATION

INSTALL THE BREAKAWAY POST ADJACENT TO THE CONCRETE OUTLET FOR UNDERDRAIN ON THE APPROACH SIDE OF TRAFFIC, OR AS DIRECTED.

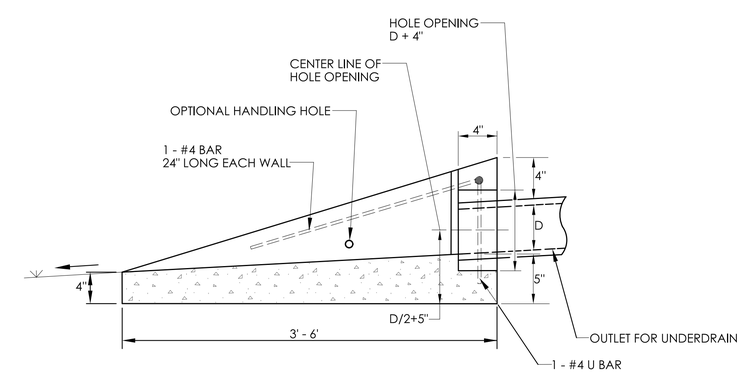

SECTION A

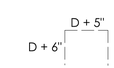

#4 U BAR

	NOT TO SCALE	SIGNATURE BLOCK: OFFICE OF ENGINEERING 2800 BERLIN TURNPIKE NEWINGTON, CT 06111	SUBMITTED BY: Digitally signed by Leo Fontaine, P.E. Date: 2024.12.16 14:01:26-05'00'	APPROVED BY: Digitally signed by Michael N. Calabrese, P.E. Date: 2025.01.21 13:11:01-05'00'	CTDOT CONNECTICUT DEPARTMENT OF TRANSPORTATION	CTDOT STANDARD SHEET	STANDARD SHEET TITLE: UNDERDRAINS AND UNDERDRAIN OUTLETS	STANDARD SHEET NO.: HW-751_01

PLOTTED DATE: 11/25/2024