MASSACHUSETTS
CLEAN ENERGY CENTER

NEW BEDFORD MARINE COMMERCE TERMINAL

CONTRACT # MACEC-FY13-001NB

MAY 2013
FOR CONSTRUCTION

REVISIONS:

NO.	DATE	DESCRIPTION
1.	12-23-11	FOR CONSTRUCTION
2.	6-28-12	VARIOUS MODIFICATIONS TO DESIGN PLANS
3.	12-5-12	ISSUED FOR BID
4.	5-17-13	RECONCILED FOR CONSTRUCTION SET

GZA
GeoEnvironmental, Inc.
Engineers and Scientists
530 Broadway
Providence, RI 02909
(401) 421-4140

cleengineering

Maguire Group Inc.
Architects / Engineers / Planners
225 Chapman Street, 4th Floor
Providence,Rhode Island 02905
401-272-6000
www.maguiregroup.com

SCALE: 1"=2,000'
0 2,000 4,000

APEX

ROCKVILLE, MD
SOUTH WINDSOR, CT - BOSTON, MA - NEW BEDFORD, MA - HOLYOKE, MA

184 HIGH STREET, SUITE 502
BOSTON, MA 02210

58H CONNECTICUT AVENUE
SOUTH WINDSOR, CT

This drawings prepared by Apex for this project are instruments of Apex's service for use solely with respect to this project, and Apex shall be deemed the author of the Drawing and shall retain all common law, statutory and other reserved rights with respect thereto, including the copyright. The Documents shall not be used on other projects, for additions to this project or for completion of this project by others, except by agreement in writing and with appropriate compensation to Apex.

COMMONWEALTH OF MASSACHUSETTS
CHESTER H. MYERS
ENVIRONMENTAL
NO. 45634
7/17/13
REGISTERED PROFESSIONAL ENGINEER

PROJECT
NEW BEDFORD MARINE COMMERCE TERMINAL

OWNER
MASSACHUSETTS CLEAN ENERGY CENTER
55 SUMMER STREET, 9TH FLOOR
BOSTON, MASSACHUSETTS

NO.	DATE	DESCRIPTION	BY

PROJECT NO.	6690
CADD FILE	TITLE_DETAILS
DESIGNED BY	CHM
DRAWN BY	CHM
CHECKED BY	CWM
DATE	7/30/11
DRAWING SCALE	N.T.S.

GRAPHIC SCALE

NOT TO SCALE

SHEET TITLE

TITLE SHEET

DRAWING NO.

T-1

INDEX SHEET

TITLE SHEETS:
T-1 TITLE SHEET
T-2 INDEX SHEET
T-3 GENERAL ARRANGEMENT PLAN
T-4 GENERAL NOTES AND PROJECT DESCRIPTION
T-5 FACILITY USAGE PLAN

EXISTING CONDITIONS SHEETS:
E-1.1 EXISTING CONDITIONS UPLAND SHEET 1
E-1.2 EXISTING CONDITIONS UPLAND SHEET 2
E-1.3 EXISTING CONDITIONS UPLAND SHEET 3
E-1.4 EXISTING CONDITIONS UPLAND SHEET 4
E-2.1 EXISTING CONDITIONS DREDGE FOOTPRINT SHEET 1
E-2.2 EXISTING CONDITIONS DREDGE FOOTPRINT SHEET 2
E-3.1 EXISTING CONDITIONS CAD CELL #3
E-3.2 EXISTING CONDITIONS CAD CELL #2 DISPOSAL AREA
E-4.1 EXISTING CONDITIONS BORROW PIT CAD CELL
E-4.2 EXISTING CONDITIONS CAD CELL #1
E-5.1 EXISTING CONDITIONS WINTER FLOUNDER MITIGATION AREA
E-5.2 EXISTING CONDITIONS OU-3 CAPPING AREA
E-5.3 BLANK SHEET

STRUCTURAL SHEETS:
S-0 STRUCTURAL GENERAL NOTES
S-1 BULKHEAD LAYOUT & TIE-IN
S-2 CELL PLAN LAYOUT
S-3 COFFERDAM LAYOUT 32' DREDGE AREA (PLAN VIEW)
S-4 COFFERDAM LAYOUT (PLAN VIEW)
S-5 PARTIAL VIEW SOUTH BULKHEAD
S-6 TYPICAL CELL 32' DREDGING AREA
S-7 2-PILE CELL 20' DESIGN DREDGING AREA
S-8 3-PILE SECTIONS 32' DREDGING
S-9 SOUTH BULKHEAD SECTION VIEW
S-10 MISC. DETAILS
S-11 NORTH BULKHEAD DETAILS
S-12 SOUTH REVETMENT
S-13 FENDER DETAILS
S-14 BULKHEAD & UTILITY TRENCH DETAILS
S-15 DECK REINFORCING STEEL: CONCRETE 32' DREDGING
S-16 DECK REINFORCING STEEL: CONCRETE 32' DREDGING
S-17 DECK REINFORCING STEEL: CONCRETE 32' DREDGING
S-18 DECK REINFORCING STEEL
S-19 DECK REINFORCING STEEL: CONCRETE 20' DREDGING
S-20 DECK REINFORCING STEEL
S-21 DECK REINFORCING DETAILS
S-22 CONCRETE - BOLLARDS & MISC.
S-23 CELL DRAINAGE & SOUTH REVETMENT LAYOUTS

NON-STRUCTURAL PLAN SHEETS:
P-1.1 EROSION AND SEDIMENTATION CONTROLS PLAN
P-1.2 REMEDIAL EXCAVATION PLAN
P-1.3 FILL BELOW MEAN HIGH WATER PLAN
P-1.4 SUB-GRADE GRADING PLAN
P-1.5 GRADING AND DRAINAGE PLAN
P-1.6 FORMER DARTMOUTH FINISHING SITE SUB-GRADE GRADING PLAN
P-1.7 FORMER DARTMOUTH FINISHING SITE FINAL GRADING PLAN
P-1.8 FACILITY USAGE AREA MARKINGS
P-2.1 TOP OF DREDGE FOOTPRINT PLAN 1
P-2.2 TOP OF DREDGE FOOTPRINT PLAN 2
P-2.3 INTERMEDIATE DREDGE FOOTPRINT PLAN 1
P-2.4 INTERMEDIATE DREDGE FOOTPRINT PLAN 2
P-2.5 BOTTOM OF DREDGE PLAN 1
P-2.6 BOTTOM OF DREDGE PLAN 2
P-2.7 GIFFORD STREET CHANNEL DREDGE
P-2.8 MOORING MITIGATION AREA PLAN
P-2.9 NAVIGATIONAL AIDS
P-3.1 TOP OF CAD #3
P-3.2 CAD CELL #2 DISPOSAL PLAN
P-3.3 BOTTOM OF CAD #3
P-3.4 CAD CELL #3 DISPOSAL PLAN
P-4.1 BORROW PIT CAPPING PLAN
P-4.2 CAD CELL #1 CAPPING PLAN
P-5.1 WINTER FLOUNDER MITIGATION AREA PLAN
P-5.2 OU-3 CAPPING AREA PLAN
P-5.3 FEDERAL TURNING BASIN DREDGE AREA
P-5.4 BLANK SHEET
P-5.5 BLANK SHEET

UTILITY PLAN SHEETS:
U-1 UTILITY PLAN
EO01 ELECTRICAL SITE PLAN

NON-STRUCTURAL CROSS-SECTION SHEETS:
X-1.1 FACILITY CROSS-SECTIONS
X-1.2 FORMER DARTMOUTH FINISHING SITE CROSS-SECTION
X-2.1 DREDGE CROSS-SECTIONS 1
X-2.2 DREDGE CROSS-SECTIONS 2
X-2.3 GIFFORD STREET CHANNEL DREDGE
X-2.4 MOORING MITIGATION AREA CROSS-SECTIONS
X-3.1 CAD CELL #3 CROSS-SECTIONS
X-3.2 CAD CELL #2 CROSS-SECTIONS
X-4.1 BORROW PIT AND CAD CELL #1 CAPPING AREA CROSS-SECTIONS
X-5.1 OU-3 AND WINTER FLOUNDER CAPPING AREA CROSS-SECTIONS
X-5.2 FEDERAL TURNING BASIN DREDGE AREA CROSS SECTIONS
X-6.1 CROSS-SECTION LOCATION PLAN
X-6.2 PROFILE SECTION A-A'
X-6.3 PROFILE SECTION B-B'
X-6.4 PROFILE SECTION C-C'
X-6.5 PROFILE SECTION D-D'

NON-STRUCTURAL DETAIL SHEETS:
D-1 UTILITY DETAILS 1
D-2 UTILITY DETAILS 2
D-3 UTILITY DETAILS 3
D-4 UTILITY DETAILS 4
D-5 UTILITY DETAILS 5
D-6 ELECTRICAL DETAILS
D-7 UTILITY BUILDING PLAN AND DETAILS
D-8 ELECTRICAL DETAILS
D-9 ELECTRICAL RISER DIAGRAMS AND SCHEDULES

GZA
GeoEnvironmental, Inc.
Engineers and Scientists
530 Broadway
Providence, RI 02909
(401) 421-4140

cleengineering

Maguire Group Inc.
Architects / Engineers / Planners
225 Chapman Street, 4th Floor
Providence, Rhode Island 02905
401-272-6000
www.maguiregroup.com

APEX
ROCKVILLE, MD
SOUTH WINDSOR, CT - BOSTON, MA - NEW BEDFORD, MA - HOLYOKE, MA
184 HIGH STREET, SUITE 502
BOSTON, MA 02210
58H CONNECTICUT AVENUE
SOUTH WINDSOR, CT

This drawings prepared by Apex for this project are instruments of Apex's service for use solely with respect to this project, and Apex shall be deemed the author of the Drawing and shall retain all common law, statutory and other reserved rights with respect thereto, including the copyright. The Documents shall not be used on other projects, for additions to this project or for completion of this project by others, except by agreement in writing and with appropriate compensation to Apex.

COMMONWEALTH OF MASSACHUSETTS CHESTER H. MYERS ENVIRONMENTAL NO. 45554 REGISTERED PROFESSIONAL ENGINEER 11/23/12

Note: See respective sheets for responsible engineer(s).

PROJECT
NEW BEDFORD MARINE COMMERCE TERMINAL

OWNER
MASSACHUSETTS CLEAN ENERGY CENTER
55 SUMMER STREET, 9TH FLOOR
BOSTON, MASSACHUSETTS

NO.	DATE	DESCRIPTION	BY

PROJECT NO.	6690
CADD FILE	TITLE_DETAILS
DESIGNED BY	CHM
DRAWN BY	CHM
CHECKED BY	CWM
DATE	7/30/11
DRAWING SCALE	N.T.S.

GRAPHIC SCALE
NOT TO SCALE

SHEET TITLE
INDEX SHEET

DRAWING NO.
T-2

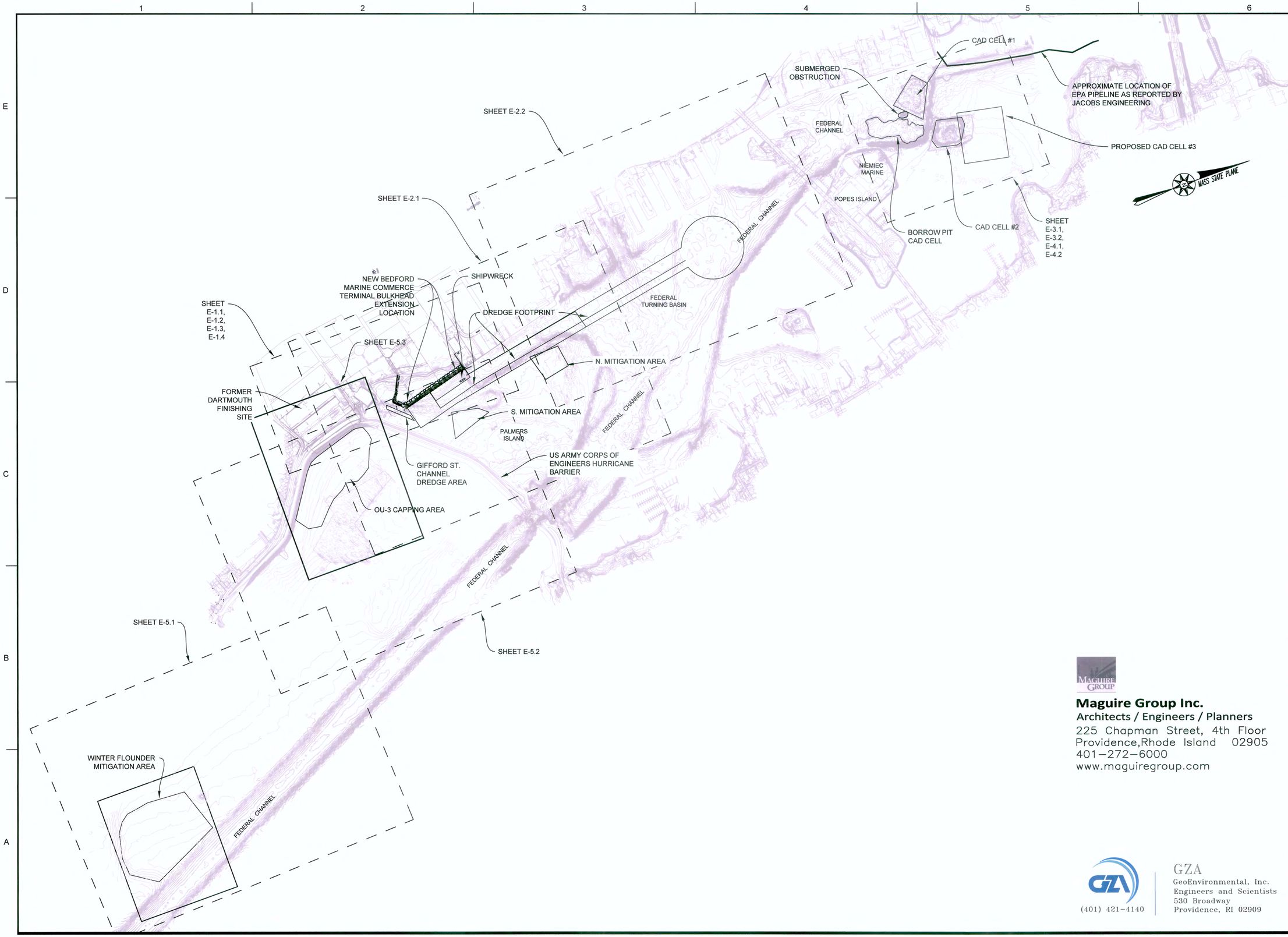

APEX

ROCKVILLE, MD
SOUTH WINDSOR, CT - BOSTON, MA - NEW BEDFORD, MA - HOLYOKE, MA

184 HIGH STREET, SUITE 502
BOSTON, MA 02210

58H CONNECTICUT AVENUE
SOUTH WINDSOR, CT

This drawings prepared by Apex for this project are instruments of Apex's service for use solely with respect to this project, and Apex shall be deemed the author of the Drawing and shall retain all common law, statutory and other reserved rights with respect thereto, including the copyright. The Documents shall not be used on other projects, for additions to this project or for completion of this project by others, except by agreement in writing and with appropriate compensation to Apex.

COMMONWEALTH OF MASSACHUSETTS
CHESTER H. MYERS
ENVIRONMENTAL
NO. 45654
REGISTERED PROFESSIONAL ENGINEER

PROJECT
NEW BEDFORD MARINE COMMERCE TERMINAL

OWNER
MASSACHUSETTS CLEAN ENERGY CENTER
55 SUMMER STREET, 9TH FLOOR
BOSTON, MASSACHUSETTS

NO.	DATE	DESCRIPTION	BY

PROJECT NO.	6690
CADD FILE	TITLE_DETAILS
DESIGNED BY	CHM
DRAWN BY	CHM
CHECKED BY	CWM
DATE	7/30/11
DRAWING SCALE	1"=600'

GRAPHIC SCALE
SCALE: 1"=600'
0 300 600 1200

SHEET TITLE
GENERAL ARRANGEMENT PLAN

DRAWING NO.
T-3

MAGUIRE GROUP
Maguire Group Inc.
Architects / Engineers / Planners
225 Chapman Street, 4th Floor
Providence,Rhode Island 02905
401-272-6000
www.maguiregroup.com

GZA
(401) 421-4140
GZA
GeoEnvironmental, Inc.
Engineers and Scientists
530 Broadway
Providence, RI 02909

GENERAL NOTES:

1. NOTES BELOW ARE NOT INTENDED TO REPLACE SPECIFICATIONS. SEE SPECIFICATIONS FOR REQUIREMENTS IN ADDITION TO GENERAL NOTES.
2. A SIGNIFICANT QUANTITY OF DATA HAS BEEN COLLECTED ASSOCIATED WITH THIS PROJECT. DATA COLLECTED ASSOCIATED WITH THIS PROJECT IS CONTAINED WITHIN THE DOCUMENT ENTITLED "DATA REPORT – NEW BEDFORD MARINE COMMERCE TERMINAL".
3. THESE PLANS AND SPECIFICATIONS ARE PREPARED FOR THE EXPRESS USE OF THE DESIGN TEAM (APEX COMPANIES, LLC AND ITS SUBCONTRACTORS), THE CHOSEN CONTRACTOR, AND THE DESIGN TEAM'S CLIENT. THIRD PARTY USE OF THESE PLANS IS EXPRESSLY PROHIBITED WITHOUT WRITTEN AUTHORIZATION FROM THE DESIGN TEAM. NO GUARANTEE TO ANY THIRD PARTY IS MADE OR IMPLIED.
4. THE CONTRACTOR IS ADVISED THAT THE DRAWINGS AND SPECIFICATIONS FORM A PART OF THE CONTRACT DOCUMENTS. ALL WORK SHALL BE PERFORMED IN ACCORDANCE WITH THE CONTRACT DOCUMENTS. THE CONTRACTOR SHALL KEEP A COPY OF THE DRAWINGS AND SPECIFICATIONS ONSITE AT ALL TIMES DURING THE PROJECT.
5. EXISTING CONDITIONS ARE INTENDED TO PROVIDE GENERAL OVERVIEW OF EXISTING ELEVATIONS, UTILITIES, AND STRUCTURES, BUT DO NOT INCLUDE ALL APPURTENANCES AND CONDITIONS.
6. CONTRACTOR SHALL MAINTAIN ADEQUATE SURVEY CONTROL AT ALL TIMES TO ESTABLISH AND MAINTAIN ALL LINES AND ELEVATIONS.
7. EXACT SIZE & LOCATION OF ONSITE AND OFFSITE UTILITIES SHALL BE FIELD VERIFIED BY THE CONTRACTOR PRIOR TO START OF CONSTRUCTION. UTILITIES TO BE DEMOLISHED SHALL BE PERMANENTLY DE-ENERGIZED, BLANKED, OR OTHERWISE ISOLATED PRIOR TO DEMOLITION. UTILITIES TO REMAIN (INCLUDING OFF-SITE UTILITIES) SHALL BE PROTECTED FROM DAMAGE.
8. THE CONTRACTOR SHALL VERIFY THE LOCATION OF UNDERGROUND UTILITIES WITHIN THE LIMITS OF THE WORK PRIOR TO COMMENCING ANY EXCAVATION OR GROUND PENETRATING WORK. THE CONTRACTOR SHALL NOTIFY "DIG SAFE" (1-888-344-7223) AT LEAST 3 BUSINESS DAYS PRIOR TO COMMENCEMENT OF THE EXCAVATION OR GROUND PENETRATING ACTIVITY.
9. METHODS OF DEMOLITION, CONSTRUCTION, AND ERECTION ARE THE CONTRACTOR'S RESPONSIBILITY UNLESS OTHERWISE SPECIFIED.
10. ALL DIMENSIONS AND DETAILS OF THE EXISITING CONDITIONS AND THE PROPOSED CONDITIONS SHALL BE CHECKED AND VERIFIED IN THE FIELD BY THE CONTRACTOR PRIOR TO COMMENCING CONSTRUCTION.
11. IT IS THE CONTRACTOR'S RESPONSIBILITY TO PROVIDE AND MAINTAIN ENVIRONMENTAL CONTROLS AS REQUIRED BY STATE, LOCAL, AND FEDERAL REGULATIONS AND LAW, AS WELL AS REQUIRED WITHIN EXISTING PERMITS AND APPROVALS.
12. ALL APPLICABLE FEDERAL AND STATE REGULATIONS AND PERMITS SHALL BE FOLLOWED, INCLUDING, BUT NOT LIMITED TO, THE CLEAN WATER ACT, THE FEDERAL DEPARTMENT OF LABOR, OCCUPATIONAL SAFETY, HEALTH ACT, 401 WATER QUALITY CERTIFICATION, CHAPTER 91 LICENSE, AND U.S. ARMY CORPS OF ENGINEERS.
13. CONTRACTOR SHALL PROVIDE ALL CATCH BASINS ONSITE AND WITHIN 100 FEET OF ANY BOUNDARY OF THE SITE WITH SILT SACK INLET PROTECTION. THE CONTRACTOR SHALL CLEAN WEEKLY AND AFTER EACH SIGNIFICANT RAIN EVENT THE SILT SACKS AT EACH CATCH BASIN AND THE CATCH BASINS THEMSELVES, AS NECESSARY, BY REMOVAL OF SEDIMENT AND DEBRIS. ALL CATCH BASINS AND ASSOCIATED DRAINAGE STRUCTURES SHALL BE CLEANEED AND DEBRIS REMOVED PRIOR TO FINAL COMPLETION.

GENERAL STRUCTURAL NOTES:

1. SEE DRAWING S-0 FOR GENERAL STRUCTURAL NOTES.

GENERAL GEOTECHNICAL NOTES:

1. SEE DRAWING X-6.1 FOR GENERAL EARTHWORK AND GEOTECHNICAL NOTES.

GENERAL DESCRIPTION OF THE WORK

THE GENERAL DESCRIPTION BELOW IS GIVEN TO INDICATE THE APPROXIMATE SCOPE OF THIS PROJECT ONLY. IT DOES NOT LIMIT THE WORK REQUIRED UNDER THE PROJECT DRAWINGS AND SPECIFICATIONS. FOR REFERENCE, THE WORD "SITE" SHALL MEAN THE UPLAND AREAS OF THE NEW BEDFORD MARINE COMMERCE TERMINAL, THE MITIGATION AREAS, THE CAPPING AREAS, THE DISPOSAL AREAS, THE DREDGE AREAS, THE WATERWAYS ADJACENT THERETO, THE FORMER DARTMOUTH FINISHING SITE, THE STRUCTURES AND LAND ADJACENT THERETO, WINTER FLOUNDER MITIGATION AREA, MOORING MITIGATION AREAS, THE GIFFORD STREET CHANNEL DREDGE AREA, OU-3 CAPPING AREA, AND BORROW PIT CAD CELL, CAD CELL #1, CAD CELL #2, AND CAD CELL #3 AND ADJACENT AREAS.

THE WORK OF THIS PROJECT CONSISTS OF CONSTRUCTION OF THE NEW BEDFORD MARINE COMMERCE TERMINAL AND ASSOCIATED CONSTRUCTION, DISPOSAL, CAPPING, AND MITIGATION MEASURES.

MORE SPECIFICALLY:

- THE PROJECT INCLUDES BULKHEAD CONSTRUCTION AT THE NEW BEDFORD MARINE COMMERCE TERMINAL:
  1. REMOVAL OF ROCK WHERE PRESENT,
  2. EXTENSION OF THE EXISTING SOUTH TERMINAL BULKHEAD TO THE SOUTH,
  3. INSTALLATION OF A RETURN WALL AND REVETMENT ON THE SOUTH SIDE AND RETURN WALL ON THE NORTH SIDE OF THE NEW BULKHEAD,
  4. PROTECTION OF THE EXISTING SOUTH TERMINAL BULKHEAD,
  5. INSTALLATION OF A UTILITY TRENCH ON THE EASTERN EDGE OF THE BULKHEAD;
  6. REMOVAL OF UNSUITABLE MATERIAL FROM WITHIN THE COFFERDAMS AND FUTURE FILLED STRUCTURE, FILLING OF THE STRUCTURE, AND
  7. COMPACTION OF THE MATERIAL WITHIN THE NEW STRUCTURE.
- THE PROJECT INCLUDES EARTHWORK WITHIN THE UPLAND PORTION OF THE NEW BEDFORD MARINE COMMERCE TERMINAL:
  1. DEBRIS HAS BEEN IDENTIFIED ON THE SITE AND WILL NEED TO BE CHARACTERIZED AND DISPOSED BY THE CONTRACTOR,
  2. THE SITE CONTAINS DENSE VEGETATION AND ORGANIC SOILS WHICH WILL NEED TO BE REMOVED AND GRUBBED BY THE CONTRACTOR AND DISPOSED OFFSITE,
  3. CONTAMINATED SOILS HAVE BEEN IDENTIFIED ON THE SITE, WHICH WILL NEED TO BE EXCAVATED AND DISPOSED OF OFFSITE,
  4. REMOVAL OF UPLAND FILL ABOVE MEAN HIGH WATER AND REMOVAL OF UNSUITABLE MATERIAL BELOW MEAN LOW WATER;
  5. THE SITE WILL NEED TO BE RE-GRADED PRIOR TO PLACEMENT OF FILL,
  6. THE FILL USED WITHIN THE SITE WILL PRIMARILY COME FROM THE BOTTOM OF DREDGE, BUT WILL ALSO INCLUDE OFF-SITE MATERIALS;
  7. INSTALLATION OF UTILITIES AS SHOWN ON THE CONTRACT DOCUMENTS.
- THE PROJECT INCLUDES CONSTRUCTION OF CAD CELL #3:
  1. THE TOP OF CAD CELL #3 WILL BE PLACED INTO CAD CELL #2,
  2. THE BOTTOM OF CAD CELL #3 WILL EITHER BE TAKEN TO CAPE COD BAY DISPOSAL SITE, THE RHODE ISLAND SOUND DISPOSAL SITE, OR ALSO MAY BE USED AS CAPPING MATERIAL, AS SHOWN.
- THE PROJECT INCLUDES REMOVAL AND DISPOSAL OF UNSUITABLE MARINE DEBRIS:
  1. DEBRIS HAS BEEN IDENTIFIED WITHIN MARINE AREAS PROPOSED FOR DREDGING. DEBRIS UNSUITABLE FOR DISPOSAL WITHIN CAD CELL #3 SHALL BE REMOVED BY THE CONTRACTOR AND DISPOSED OFFSITE.
- THE PROJECT INCLUDES DREDGING OF A BOAT BASIN AND CHANNEL IN FRONT OF THE NEW BULKHEAD, WHICH INCLUDES DREDGING THE FOLLOWING LAYERS:
  1. FIRST THE PROJECT INVOLVES REMOVAL OF FINE-GRAINED ORGANIC, CONTAMINATED SEDIMENT FROM THE TOP OF DREDGE FOOTPRINT AND PLACEMENT OF THAT MATERIAL INTO CAD CELL #3.
  2. NEXT THE PROJECT INVOLVES REMOVAL OF INTERMEDIATE DREDGE MATERIAL, WHICH MAY BE UTILIZED TO CAP CAD CELL #1 OR THE BORROW PIT CAD CELL.
  3. FINALLY, THE PROJECT INVOLVES REMOVAL OF THE BOTTOM OF DREDGE, WHICH WILL EITHER BE PLACED UPLAND, DEWATERED AND USED AS FILL FOR THE SITE, EITHER WITHIN THE COFFERDAMS, BEHIND THE COFFERDAMS, FURTHER UPLAND AT THE SITE, OR AT THE FORMER DARTMOUTH FINISHING SITE OR WILL BE USED TO CAP THE WINTER FLOUNDER MITIGATION AREA, THE OU#3 CAPPING AREA.
- ROCK HAS BEEN IDENTIFIED WITHIN THE BOTTOM OF DREDGE AREA, AND WILL HAVE TO BE REMOVED BY THE CONTRACTOR. THE CONTRACTOR MAY CRUSH AND UTILIZE THE ROCK WITHIN THE SITE AS OUTLINED ON THE CONTRACT DOCUMENTS, OR MAY DISPOSE OF THE MATERIAL OFFSITE.
- THE PROJECT INCLUDES CAPPING OF THE OU-3 CAPPING AREA.
- THE PROJECT INCLUDES CAPPING OF THE WINTER FLOUNDER MITIGATION AREA.
- THE PROJECT INCLUDES CAPPING OF THE BORROW PIT CAD CELL.
- THE PROJECT INCLUDES CAPPING OF CAD CELL #1.
- THE PROJECT INCLUDES DREDGING THE MOORING MITIGATION AREAS AND PLACEMENT OF THE DREDGE MATERIAL WITHIN CAD CELL #3.
- THE PROJECT INCLUDES DREDGING THE GIFFORD STREET CHANNEL AREA AND PLACEMENT OF THE DREDGE MATERIAL WITHIN CAD CELL #3.
- THE PROJECT INCLUDES RE-GRADING OF THE FORMER DARTMOUTH FINISHING SITE AND INSTALLATION OF UTILITIES AS SHOWN.

LAND AND HYDROGRAPHIC SURVEY, DREDGING, DISPOSAL, AND CAPPING NOTES:

1. THE INFORMATION DEPICTED ON THE PLANS REPRESENTS THE RESULTS OF SURVEYS MADE ON THE DATES INDICATED HEREIN AND CAN ONLY BE CONSIDERED AS INDICATING THE CONDITIONS AT THE TIME OF THE SURVEYS AND AT THE SOUNDING POINTS NOTED ON THE PLANS.
2. COORDINATES SHOWN ARE IN THE STATE PLANE COORDINATE SYSTEM, MASSACHUSETTS MAINLAND ZONE 2001, REFERENCED TO THE 1983 NORTH AMERICAN DATUM (NAD 83).
3. HYDROGRAPHIC SURVEY DATA OF PROPOSED CAD CELL #3 AREA, EXISTING BORROW PIT CAD CELL, EXISTING CAD CELL #1, OU-3 CAPPING AREA, AND WINTER FLOUNDER MITIGATION AREA WERE COLLECTED BY APEX COMPANIES, LLC IN JULY AND AUGUST OF 2011. HYDROGRAPHIC SURVEY DATA OF EXISTING CAD CELL#2 WAS COLLECTED BY APEX COMPANIES, LLC IN DECEMBER 2012.
4. HYDROGRAPHIC SURVEY DATA OF NEW BEDFORD MARINE COMMERCE TERMINAL DREDGE FOOTPRINT, GIFFORD STREET CHANNEL AREA, AND NORTHERN AND SOUTHERN MOORING MITIGATION AREAS WERE COLLECTED BY APEX COMPANIES, LLC IN JANUARY, FEBRUARY, AND MARCH OF 2011.
5. SOME HYDROGRAPHIC SURVEY DATA OF THE FEDERAL CHANNEL AND FEDERAL TURNING BASIN SHOWN ON THE CONTRACT DRAWINGS WAS COLLECTED BY THE U.S. ARMY CORPS OF ENGINEERS IN 2009.
6. LOCATIONS OF SUBMERGED OBSTRUCTIONS NOTED ON THE PLANS ARE APPROXIMATE, AND ARE BASED ON HYDROGRAPHIC SURVEY DATA. OTHER OBSTRUCTIONS, NOT SHOWN ON THE CONTRACT DRAWINGS, MAY ALSO EXIST. THE SUBMERGED OBSTRUCTIONS MAY POSE A NAVIGATION HAZARD. THE CONTRACTOR SHALL FIELD VERIFY LOCATION, DEPTH, AND CHARACTER OF THE SUBMERGED OBSTRUCTIONS.
7. IT IS KNOWN THAT THE U.S. EPA HAS A PIPELINE NORTH OF CAD CELL #1 WHICH MUST BE ACCURATELY LOCATED BY THE CONTRACTOR PRIOR TO MOORING OR SPUDDING ANY BARGE OR VESSEL IN THE AREA OF THE PIPELINE, AS SHOWN ON THE CONTRACT DRAWINGS.
8. EXISTING UTILITIES WITHIN OR SURROUNDING THE PORTIONS OF THE SITE HAVE NOT BEEN IDENTIFIED. IDENTIFICATION AND PROTECTION OF EXISTING UTILITIES IS THE SOLE RESPONSIBILITY OF THE CONTRACTOR.
9. HYDROGRAPHIC AND LAND SURVEY DATUM IS REFERENCED TO MEAN LOWER LOW WATER (MLLW) ON THE NATIONAL OCEANIC AND ATMOSPHERIC ADMINISTRATION NATIONAL OCEAN SERVICE TIDAL BENCHMARK BM758 A 1977 – SURVEY DISK SET FLUSH IN THE SURFACE OF A CONCRETE SIDEWALK ON THE SOUTH SIDE OF U.S. HIGHWAY 6 ON THE NORTH SIDE OF THE MOBIL SERVICE STATION, 4 FEET (1M) WEST OF A FIRE HYDRANT AND 1 FOOT (0.3 M) SOUTH OF U.S. HIGHWAY 6. DATUM SEPARATIONS WERE COMPUTED BY COLER & COLANTONIO, INC. FEBRUARY, 2002 AS MLLW – 1.52 FT = NGVD29 0.0 FT AND MLLW – 2.34 FT 0.0 NAVD88. TO OBTAIN VALUES IN NGVD29, SUBTRACT 1.52 FEET FROM THE INDICATED VALUE AT ANY POINT. IN ORDER TO OBTAIN VALUES IN NAVD88 SUBTRACT 2.34 FEET FROM THE GIVEN VALUE AT ANY POINT. HORIZONTAL CONTROL CAN BE OBTAINED FROM THE OWNER'S REPRESENTATIVE. SEE GRAPHIC DEPICTION OF DATUM SEPARATIONS ON CONTRACT DRAWING "T-5 GENERAL NOTES AND PROJECT DESCRIPTION".
10. BASE PLAN FOR GENERAL CITY OF NEW BEDFORD AND TOWN OF FAIRHAVEN CONTOURS OBTAINED FROM U.S. ARMY CORPS OF ENGINEERS. EXISTING CONDITIONS SHALL BE FIELD VERIFIED BY THE CONTRACTOR.
11. LIMITS OF FEDERAL CHANNEL AND FEDERAL TURNING BASIN OBTAINED FROM U.S. ARMY CORPS OF ENGINEERS.
12. HORIZONTAL AND VERTICAL CONTROL HAS BEEN PROVIDED BY THE OWNER AND HAS NOT BEEN INDEPENDENTLY VERIFIED. THE CONTRACTOR IS RESPONSIBLE FOR FIELD VERIFICATION OF CONTROL DATA.
13. LIMITS OF DREDGING SHOWN ON THE CONTRACT DRAWINGS ARE APPROXIMATE, AND REPRESENT TOP OF SLOPE BASED UPON AN ASSUMED SLOPE OF 3 HORIZONTAL TO 1 VERTICAL (3H:1V) DRAWN OUTWARD AND UPWARD FROM THE ADJACENT TOE OF SLOPE AT THE ALLOWABLE OVERDREDGE ELEVATION TO EXISTING MUDLINE.
14. MATERIAL BEYOND THE DREDGE LIMITS WHICH SLOUGHS INTO THE DREDGE AREA SHALL BE REMOVED TO THE DESIGN DREDGE ELEVATIONS FOR THE AREA.
15. MATERIAL WHICH IS LEAKED FROM A CONTRACTOR BARGE, WHETHER WITHIN OR OUTSIDE OF A DESIGNATED DREDGE, CAPPING, OR DISPOSAL AREA, SHALL BE REMOVED BY THE CONTRACTOR AND DISPOSED OF AT NO COST TO THE OWNER.
16. EXISTING TEMPORARY STRUCTURES, SUCH AS MOORINGS, FLOATING DOCKS, BARGES OR VESSELS TO BE TEMPORARILY RELOCATED BY THE CONTRACTOR PRIOR TO THE START OF CONSTRUCTION. CONTRACTOR MUST FIRST COMMUNICATE WITH THE OWNER OF SUCH STRUCTURES PRIOR TO TEMPORARY RELOCATION OF SUCH STRUCTURES. ONCE CONSTRUCTION IS COMPLETE, CONTRACTOR SHALL RE-LOCATE THE STRUCTURE TO ITS ORIGINAL LOCATION.
17. EXISTING PERMANENT STRUCTURES, SUCH AS PILINGS, BULKHEADS, DOCKS, SUNKEN BARGES, OR COFFERDAMS TO REMAIN IN PLACE DURING CONSTRUCTION. NO DREDGING SHALL BE PERMITTED WITHIN 5 FEET OF EXISTING STRUCTURES, UNLESS OTHERWISE DIRECTED ON THE CONTRACT DRAWINGS.
18. OVERDREDGING BY THE CONTRACTOR IS TO BE MINIMIZED TO THE MAXIMUM EXTENT PRACTICABLE. SEE SECTION 02482 DREDGING FOR ADDITIONAL DETAILS. LIQUIDATED DAMAGES ARE APPLICABLE FOR OVERDREDGING MATERIAL TO BE DREDGED AS SHOWN ON CONTRACT DRAWINGS P-2.1 AND P-2.2 (TOP OF DREDGE FOOTPRINT MATERIAL).
19. THE CONTRACTOR SHALL DESIGN CAPPING OPERATIONS SUCH THAT MATERIAL IS PLACED WITHIN THE DESIGNATED CAPPING AREA. MATERIAL PLACED BEYOND THE DESIGNATED CAPPING AREA CLEAN UP AREA LIMITS SHALL BE REMOVED BY THE CONTRACTOR AND DISPOSED OF AT NO COST TO THE OWNER.
20. CONTRACTOR SHALL DESIGN CAPPING OPERATIONS AT THE OU-3 CAPPING AREA SUCH THAT THEY WILL NOT DISTURB THE EXISTING CAP.
21. NO SPUDDING OR ANCHORING SHALL OCCUR WITHIN CAD CELL #1 OR THE BORROW PIT CAD CELL, AS SPUDDING OR ANCHORING MAY DISTURB THE COHESIVENESS OF THE MATERIAL WITHIN THE CAD CELLS, MAKING CAPPING MORE DIFFICULT.
22. REFER TO SECTION 02482 DREDGING AND 02492 DISPOSAL AT OFFSHORE DISPOSAL SITES FOR ADDITIONAL INFORMATION REGARDING DREDGING, DISPOSAL, AND OFFSHORE DISPOSAL.
23. REFER TO SECTION 02550 CAPPING FOR ADDITIONAL INFORMATION REGARDING CAPPING.
24. REFER TO SECTION 02600 UPLAND RE-USE AND SECTION 02200 EARTHWORK FOR ADDITIONAL INFORMATION REGARDING UPLAND RE-USE OF DREDGE MATERIAL WITHIN THE FORMER DARTMOUTH FINISHING SITE AND THE NEW BEDFORD MARINE COMMERCE TERMINAL
25. THE CONTRACTOR SHALL DESIGN DISPOSAL OPERATIONS SUCH THAT MATERIAL IS PLACED WITHIN THE DESIGNATED DISPOSAL AREA. MATERIAL PLACED BEYOND THE DESIGNATED DISPOSAL AREA CLEAN UP AREA LIMITS SHALL BE REMOVED BY THE CONTRACTOR AND PLACED WITHIN THE DESIGNATED DISPOSAL AREA AT NO COST TO THE OWNER.

SITE OPERATIONAL NOTES:

A RADIO FREQUENCY (RF) SAFETY HAZARD MAY EXIST IN ASSOCIATION WITH THE USE OF CERTAIN EQUIPMENT ONSITE RELATED TO THE OPERATION OF AN AM/FM RADIO TOWER LOCATED ON MAP 31, PARCEL 234. THE HAZARD HAS THE POTENTIAL TO GENERATE CURRENTS WITHIN EQUIPMENT THAT COULD CAUSE ARCING OR ELECTRIC SHOCKS TO PERSONNEL ONSITE. PRIOR TO MOBILIZATION OF ANY EQUIPMENT TO THE SITE MEASURING 45 FEET OR GREATER FROM ITS BASE TO ITS HIGHEST POINT ABOVE GROUND, THAT HAS A LOOP CREATED BY THE BOOM AND RIGGING OF THE EQUIPMENT, WHICH, AT A MINIMUM INCLUDES ANY CRANES, PILE DRIVING EQUIPMENT OR MAN LIFTS, THE OPERATOR OF THE SITE, OR OF THE EQUIPMENT, SHALL FIRST IMPLEMENT AN RF SAFETY PROGRAM, WHICH, AT A MINIMUM, WILL CONSIST OF THE FOLLOWING:

1. RF HAZARD IDENTIFICATION AND PERIODIC SURVEILLANCE BY A COMPETENT PERSON WHO CAN EFFECTIVELY ASSESS RF EXPOSURES.
2. IDENTIFICATION AND CONTROL OF RF HAZARD AREAS.
3. IMPLEMENTATION OF CONTROLS TO REDUCE RF EXPOSURE TO LEVELS IN COMPLIANCE WITH APPLICABLE GUIDELINES.
4. RF SAFETY AND HEALTH TRAINING.
5. EMPLOYEE INVOLVEMENT IN THE STRUCTURE AND OPERATION OF THE SAFETY PROGRAM
6. IMPLEMENTATION OF AN APPROPRIATE MEDICAL SURVEILLANCE PROGRAM.
7. PERIODIC REVIEWS OF THE EFFECTIVENESS OF THE PROGRAM SO THAT DEFICIENCIES CAN BE IDENTIFIED AND RESOLVED.
8. ASSIGNMENT OF RESPONSIBILITIES, INCLUDING THE NECESSARY AUTHORITY AND RESOURCES.

THE FOLLOWING MITIGATION MEASURES, AT A MINIMUM, SHALL BE CONSIDERED, AND IMPLEMENTED AS NECESSARY, TO MINIMIZE AND/OR ABATE ANY POTENTIAL RF SAFETY HAZARD: CRANE HOOK INSULATED LINKS, USE OF NON-CONDUCTIVE SLINGS AND CHOKERS, USE OF NON-CONDUCTIVE CRANE ROPE, USE OF A "GROUNDED" TAG LINE, INSULATING GLOVES FOR PERSONNEL WORKING ON OR AROUND SUCH EQUIPMENT, AND SUITABLE GROUNDING OF THE TOP AND BASE OF MAN LIFTS.

THE OPERATION OF THE AM/FM RADIO TOWER LOCATED ON MAP 31, PARCEL 234 MAY ALSO PROJECT RADIO FREQUENCY INTERFERENCE THAT MAY INTERFERE WITH ELECTRONIC DEVICES ASSOCIATED WITH EQUIPMENT CONTROL SYSTEMS, SUCH AS FUEL GAUGES, LOAD CELLS, BOOM ANGLE INDICATORS, AND COMPUTER CONTROL SYSTEMS. THE POTENTIAL FOR THIS INTERFERENCE SHALL BE ASSESSED AND TESTED PRIOR TO USE OF THE POTENTIALLY AFFECTED EQUIPMENT AT THE SITE. APPROPRIATE AFTER-MARKET EQUIPMENT CORRECTIONS SHALL BE INSTALLED TO PROVIDE CORRECT INFORMATION TO THE OPERATOR AS NEEDED PRIOR TO THE EQUIPMENT'S USE ONSITE.

ABBREVIATIONS

BOTT = BOTTOM

⊕ = BORING

CB = CATCH BASIN
CONC = CONCRETE
CONST = CONSTRUCTION
CY = CUBIC YARDS
DI = DUCTILE IRON
EL = ELEVATION
EXIST. = EXISTING
EXP = EXPANSION
FT = FEET
GALV = GALVANIZED
IN. = INCHES
INV = INVERT ELEVATION
JT = JOINT
KIP = 1000 LB
KSI = KIPS PER SQUARE INCH
LB = POUND
LF = LINEAR FEET
MAX = MAXIMUM
MH = MANHOLE
MHW = MEAN HIGH WATER
MIN = MINIMUM
MLLW = MEAN LOWER LOW WATER
MLW = MEAN LOW WATER
MSL = MEAN SEA LEVEL
NTS = NOT TO SCALE
O.C. = ON CENTER
PSF = POUNDS PER SQUARE FOOT
PSI = POUNDS PER SQUARE INCH
REQ'D = REQUIRED
SF = SQUARE FOOT
SQ = SQUARE
SS = STAINLESS STEEL
STA = STATION
STD = STANDARD
T = TON
TOC = TOP OF CONCRETE
VERT = VERTICAL
# = NUMBER OR POUNDS
@ = AT

DEFINITIONS

CRANE OPERATION AREA – AREA DESIGNED TO SUPPORT THE DESIGN CRANE LOADS AS OUTLINED ON CONTRACT DRAWING "T-5 FACILITY USAGE PLAN".

NON-CRANE OPERATION AREAS (A,B,C,ETC.) – NON-CRANE OPERATION AREAS ARE NOT DESIGNED TO SUPPORT CRANE OPERATION AREA DESIGN CRANE LOADS. ACCEPTABLE NON-CRANE OPERATION AREA LOADING IS SHOWN ON CONTRACT DRAWING "T-5 FACILITY USAGE PLAN".

TIDAL DATA AND ELEVATIONS:

GRAPHIC DEPICTION OF DATUM SEPARATIONS FOR NEW BEDFORD HARBOR

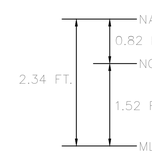

LIMITATIONS:

THE DESIGN AS PRESENTED HAS BEEN DEVELOPED UTILIZING THE INFORMATION COLLECTED AND COMPILED BY THE DESIGN TEAM AS PART OF THE DESIGN PROCESS FOR THE NEW BEDFORD MARINE COMMERCE TERMINAL AND PRESENTED IN THE "DATA REPORT – NEW BEDFORD MARINE COMMERCE TERMINAL" SUBMITTED WITH THIS DESIGN. THE DESIGN PACKAGE INCLUDES PLANS AND SPECIFICATIONS THAT WERE DEVELOPED BY THE DESIGN TEAM BASED UPON THE DESIGN TEAM'S UNDERSTANDING OF THE CURRENT SITE CONDITIONS, CURRENTLY AVAILABLE TECHNOLOGIES, CURRENT STANDARDS, AND CURRENT MARKET CONDITIONS, AND THE DESIGN IS BASED UPON THE CONDITIONS THAT EXIST AT THE SITE AT THE TIME OF THE COLLECTION OF THE INFORMATION AND THE DATE OF THE SUBMISSION OF THIS DESIGN PACKAGE (AS NOTED ON THE COVER SHEET OF THE PROJECT PLANS). THE DESIGN TEAM DOES NOT ACCEPT RESPONSIBILITY FOR CHANGES TO THE DESIGN COMPLETED BY OTHERS AFTER THE DATE SHOWN ON THE PROJECT DRAWINGS OR PROJECT SPECIFICATIONS, AND THE DESIGN TEAM CANNOT BE HELD RESPONSIBLE FOR ERRORS OR OMISSIONS THAT MAY OCCUR AS A RESULT OF CHANGES IN SITE CONDITIONS THAT OCCUR AFTER THE DATE OF THE SUBMISSION OF THIS DESIGN PACKAGE.

THESE PLANS AND SPECIFICATIONS WERE PREPARED BY THE DESIGN TEAM (APEX COMPANIES, LLC; CLE ENGINEERING INC.; GZA GEOENVIRONMENTAL, INC.; AND MAGUIRE GROUP INC.) FOR THE EXPRESS USE OF THE DESIGN TEAM'S CLIENT AND THE CONTRACTOR, FOR THE FACILITY AND LOCATIONS SHOWN ON THE DRAWINGS, BASED ON THE EXISTING CONDITIONS AT THE TIME OF THE DESIGN AND OR DATA ACQUISITION FOR WHICH THE DESIGN WAS BASED. IF CONDITIONS OTHER THAN THOSE DESCRIBED IN THE DRAWINGS ARE FOUND AT THE PROJECT LOCATION(S); THE DESIGN TEAM SHALL BE SO NOTIFIED WITH SAID CONDITION SUCH THAT ANY AND ALL SPECIFICATIONS AND DESIGN AND PERIMETERS MAY BE REVIEWED AND CLARIFICATIONS AND OR DIRECTION ISSUED AS DEEMED NECESSARY BY THE DESIGN TEAM TO MAINTAIN THE OVERALL DESIGN INTEGRITY. ANY USE OF THESE PLANS, WITHOUT EXPRESSED WRITTEN PERMISSION AND ACKNOWLEDGEMENT BY THE DESIGN TEAM, SHALL BE AT THAT PARTY'S SOLE RISK AND WITHOUT ANY LIABILITY AND OR RECOURSE TO THE DESIGN TEAM.
THE DESIGN TEAM'S SERVICES WERE PERFORMED USING THE DEGREE OF SKILL AND CARE ORDINARILY EXERCISED BY QUALIFIED PROFESSIONALS PERFORMING THE SAME TYPE OF SERVICES, AT THE SAME TIME, UNDER SIMILAR CONDITIONS, AT THE SAME OR A SIMILAR PROPERTY. NO WARRANTY IS EXPRESSED OR IMPLIED.

MAGUIRE GROUP
Maguire Group Inc.
Architects / Engineers / Planners
225 Chapman Street, 4th Floor
Providence,Rhode Island 02905
401-272-6000
www.maguiregroup.com

cleengineering

GZA
(401) 421-4140
GZA
GeoEnvironmental, Inc.
Engineers and Scientists
530 Broadway
Providence, RI 02909

APEX
ROCKVILLE, MD
SOUTH WINDSOR, CT - BOSTON, MA - NEW BEDFORD, MA - HOLYOKE, MA
184 HIGH STREET, SUITE 502
BOSTON, MA 02210
58H CONNECTICUT AVENUE
SOUTH WINDSOR, CT

This drawings prepared by Apex for this project are instruments of Apex's service for use solely with respect to this project, and Apex shall be deemed the author of the Drawing and shall retain all common law, statutory and other reserved rights with respect thereto, including the copyright. The Documents shall not be used on other projects, for additions to this project or for completion of this project by others, except by agreement in writing and with appropriate compensation to Apex.

CHRISTOPHER MORRIS ENVIRONMENTAL No. 48693
NOTE: SEE EACH RESPECTIVE SHEET FOR RESPONSIBLE ENGINEER(S).
12/5/12

PROJECT
NEW BEDFORD MARINE COMMERCE TERMINAL

OWNER
MASSACHUSETTS CLEAN ENERGY CENTER
55 SUMMER STREET, 9TH FLOOR
BOSTON, MASSACHUSETTS

NO.	DATE	DESCRIPTION	BY
3.	12/5/12	HYDROGRAPHIC NOTE	GCD
2.	3/16/12	CRANE OPERATION	CWM
1.	12/23/11	FOR CONSTRUCTION	TEB

PROJECT NO.	6690
CADD FILE	TITLE_DETAILS
DESIGNED BY	CHM
DRAWN BY	CMK
CHECKED BY	CWM
DATE	7/30/11
DRAWING SCALE	N.T.S.

GRAPHIC SCALE
NOT TO SCALE

SHEET TITLE
GENERAL NOTES AND PROJECT DESCRIPTION

DRAWING NO.
T-4

OPERATIONAL NOTES CONTINUED:
A RADIO FREQUENCY (RF) SAFETY HAZARD MAY EXIST IN ASSOCIATION WITH THE USE OF CERTAIN EQUIPMENT ONSITE RELATED TO THE OPERATION OF AN AM/FM RADIO TOWER LOCATED ON MAP 31, PARCEL 234. THE HAZARD HAS THE POTENTIAL TO GENERATE CURRENTS WITHIN EQUIPMENT THAT COULD CAUSE ARCING OR ELECTRIC SHOCKS TO PERSONNEL ONSITE. PRIOR TO MOBILIZATION OF ANY EQUIPMENT TO THE SITE MEASURING 45 FEET OR GREATER FROM ITS BASE TO ITS HIGHEST POINT ABOVE GROUND, THAT HAS A LOOP CREATED BY THE BOOM AND RIGGING OF THE EQUIPMENT, WHICH, AT A MINIMUM INCLUDES ANY CRANES, PILE DRIVING EQUIPMENT OR MAN LIFTS, THE OPERATOR OF THE SITE, OR OF THE EQUIPMENT, SHALL FIRST IMPLEMENT AN RF SAFETY PROGRAM, WHICH, AT A MINIMUM, WILL CONSIST OF THE FOLLOWING:

1. RF HAZARD IDENTIFICATION AND PERIODIC SURVEILLANCE BY A COMPETENT PERSON WHO CAN EFFECTIVELY ASSESS RF EXPOSURES.
2. IDENTIFICATION AND CONTROL OF RF HAZARD AREAS.
3. IMPLEMENTATION OF CONTROLS TO REDUCE RF EXPOSURE TO LEVELS IN COMPLIANCE WITH APPLICABLE GUIDELINES.
4. RF SAFETY AND HEALTH TRAINING.
5. EMPLOYEE INVOLVEMENT IN THE STRUCTURE AND OPERATION OF THE SAFETY PROGRAM
6. IMPLEMENTATION OF AN APPROPRIATE MEDICAL SURVEILLANCE PROGRAM.
7. PERIODIC REVIEWS OF THE EFFECTIVENESS OF THE PROGRAM SO THAT DEFICIENCIES CAN BE IDENTIFIED AND RESOLVED.
8. ASSIGNMENT OF RESPONSIBILITIES, INCLUDING THE NECESSARY AUTHORITY AND RESOURCES.

THE FOLLOWING MITIGATION MEASURES, AT A MINIMUM, SHALL BE CONSIDERED, AND IMPLEMENTED AS NECESSARY, TO MINIMIZE AND/OR ABATE ANY POTENTIAL RF SAFETY HAZARD: CRANE HOOK INSULATED LINKS, USE OF NON-CONDUCTIVE SLINGS AND CHOKERS, USE OF NON-CONDUCTIVE CRANE ROPE, USE OF A "GROUNDED" TAG LINE, INSULATING GLOVES FOR PERSONNEL WORKING ON OR AROUND SUCH EQUIPMENT, AND SUITABLE GROUNDING OF THE TOP AND BASE OF MAN LIFTS.

THE OPERATION OF THE AM/FM RADIO TOWER LOCATED ON MAP 31, PARCEL 234 MAY ALSO PROJECT RADIO FREQUENCY INTERFERENCE THAT MAY INTERFERE WITH ELECTRONIC DEVICES ASSOCIATED WITH EQUIPMENT CONTROL SYSTEMS, SUCH AS FUEL GAUGES, LOAD CELLS, BOOM ANGLE INDICATORS, AND COMPUTER CONTROL SYSTEMS. THE POTENTIAL FOR THIS INTERFERENCE SHALL BE ASSESSED AND TESTED PRIOR TO USE OF THE POTENTIALLY AFFECTED EQUIPMENT AT THE SITE. APPROPRIATE AFTER-MARKET EQUIPMENT CORRECTIONS SHALL BE INSTALLED TO PROVIDE CORRECT INFORMATION TO THE OPERATOR AS NEEDED PRIOR TO THE EQUIPMENT'S USE ONSITE.

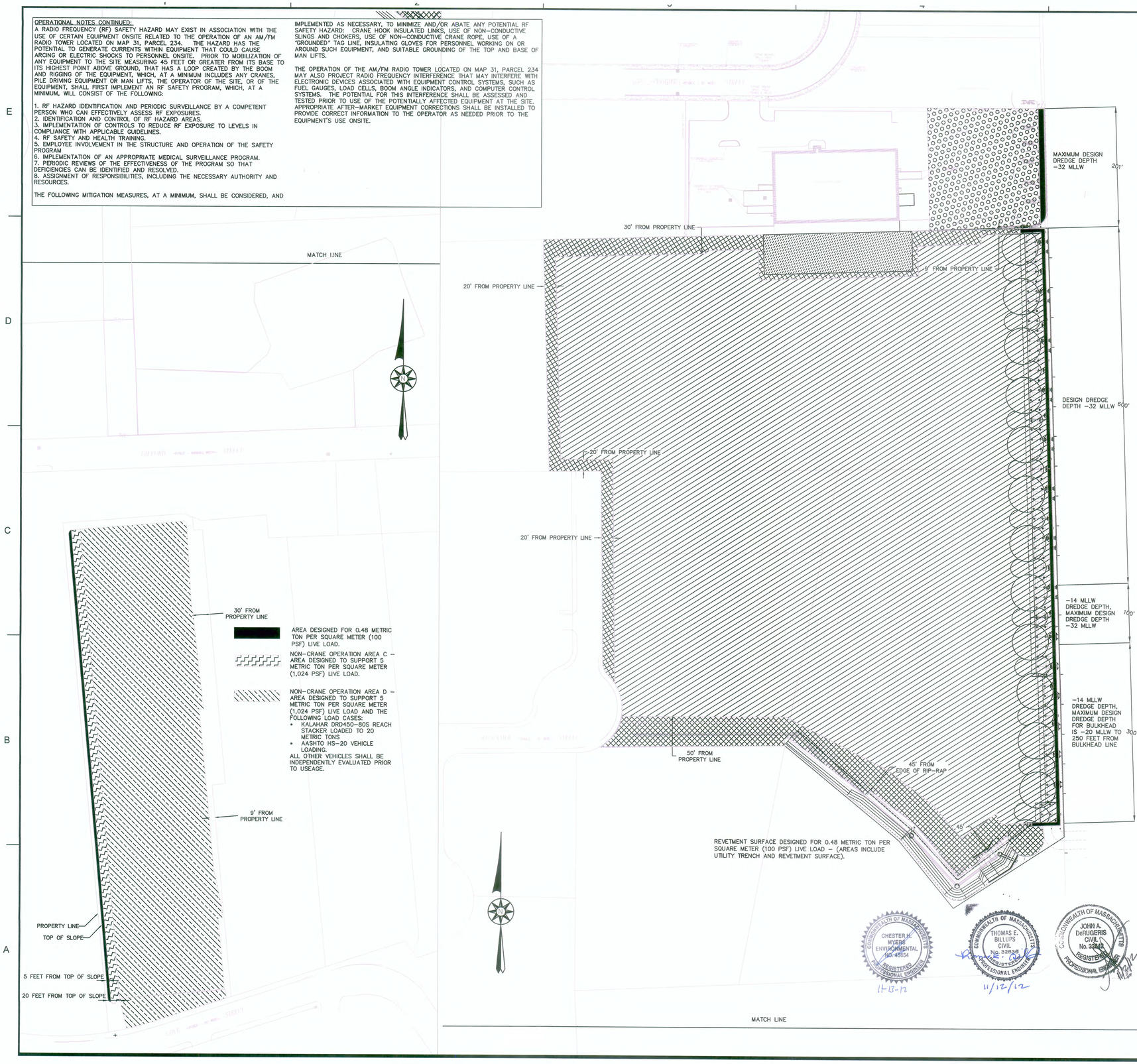

FACILITY USAGE AREAS

CRANE OPERATION AREA - AREA DESIGNED TO SUPPORT 20 METRIC TON PER SQUARE METER (4,097 PSF) LIVE LOAD AND DESIGN CRANE LOADS FOR:
LIEBHERR LR11350 FOR THE FOLLOWING LOAD CASES:
• 500 METRIC TONS AT 30 METERS,
• 333 METRIC TONS AT 45 METERS, AND
• NO LOAD.
DEMAG 66-6800 FOR THE FOLLOWING LOAD CASES:
• 400 METRIC TONS AT 30 METERS,
• 267 METRIC TONS AT 45 METERS,
• NO LOAD.
MANITOWOC MODEL 18,000 FOR THE FOLLOWING LOAD CASES:
• 350 METRIC TONS AT 8.5 METERS, AND
• 240 METRIC TONS AT 8.5 METERS.
MANITOWOC TMS 9000E AT 100 METRIC TONS FOR WHEEL LOADS.
DUNNAGE UNDER OUTRIGGERS FOR ANY CRANE OR VEHICLE MAY BE REQUIRED AND REQUIRES LOAD SPECIFIC ANALYSIS.
AREA IS ALSO DESIGNED TO SUPPORT THE FOLLOWING VEHICLES:
DESIGN REACHSTACKER: TAYLOR TITAN TS-1068 WITH 45 METRIC TON LOAD.
DESIGN SELF PROPELLED MODULAR TRANSPORTER (SPMT): 13 AXLE SCHEUERLE SPMT SUPPORTING 427 METRIC TONS.
DESIGN EXTENDED TRAILER: 34 METRIC TON AXLE LOAD.
ALL OTHER CRANES AND/OR VEHICLES AND/OR LOAD CONDITIONS SHALL BE INDEPENDENTLY EVALUATED PRIOR TO USAGE.

AREA DESIGNED FOR 0.48 METRIC TON PER SQUARE METER (100 PSF) LIVE LOAD.

NON-CRANE OPERATION AREA A - AREA DESIGNED TO SUPPORT AASHTO HS-20 VEHICLE LOADING.

AREA NOT UTILIZED FOR NEW BEDFORD MARINE COMMERCE TERMINAL.

NON-CRANE OPERATION AREA B - AREA DESIGNED FOR 1.95 METRIC TON PER SQUARE METER (500 PSF) LIVE LOAD. ALL VEHICLES OR CRANES AND LOAD CONDITIONS TO BE INDEPENDENTLY EVALUATED PRIOR TO USAGE. IN ORDER FOR WORK TO PROCEED ON CITY OF NEW BEDFORD ASSESSOR'S MAP NUMBER 31, BLOCK NUMBER 263, THE OWNER MUST HAVE IN PLACE AN EASEMENT OR PURCHASE AND SALE AGREEMENT WITH THE OWNER OF THIS PROPERTY. CONTRACTOR SHALL NOT COMPLETE WORK ON MAP NUMBER 31, BLOCK NUMBER 263 UNLESS SUCH EASEMENT HAS BEEN OBTAINED BY THE OWNER. THE WESTERN EXTENT OF PROPOSED WORK ON MAP NUMBER 31, BLOCK NUMBER 263 SHALL BE ESTABLISHED BY THE OWNER PRIOR TO CONSTRUCTION, IN CONJUNCTION WITH THE OWNER OF MAP NUMBER 31, BLOCK NUMBER 263.

DELINEATION BETWEEN FACILITY USAGE AREAS TO BE DEMARCATED AS SHOWN ON CONTRACT DRAWING "P-1.8 FACILITY USAGE AREA MARKINGS". FACILITY USAGE AREA MARKINGS SHALL BE REPLACED IMMEDIATELY IF DAMAGED TO PREVENT EXCEEDANCES OF LOADING CRITERIA FOR FACILITY USAGE AREAS.

NOTES:

1. DESIGN CHANNEL FOR THIS PROJECT IS **225** FEET IN WIDTH, DREDGED TO -30 MLLW. AN ADJACENT TUG CHANNEL TO THE EAST OF THE MAIN CHANNEL IS 100 FEET IN WIDTH, AND IS DREDGED TO -14 MLLW. DEEP DRAFT SLIP AT THE TERMINAL IS DREDGED TO -32 MLLW, IS 150 FEET IN WIDTH AND IS **800** FEET IN LENGTH. SHALLOW DRAFT SLIP AREA IS 400 FEET IN LENGTH AND DREDGED TO -14 MLLW. BOAT BASIN FOR FACILITY RANGES IN WIDTH FROM APPROXIMATELY 350 FEET AT THE SOUTHERN END TO APPROXIMATELY 375 FEET ON THE NORTHERN END AND VARIES IN DEPTH FROM -14 MLLW ON THE SOUTHERN END TO -32 MLLW ON THE NORTHERN END AT THE BULKHEAD TO -30 MLLW ON THE NORTHERN END WITHIN THE CHANNEL AND -14 MLLW ON THE NORTHERN END AT THE TUG CHANNEL. (SEE AS-BUILT PLANS).

2. MAXIMUM DESIGN DREDGE DEPTHS ARE THE MAXIMUM ALLOWABLE DREDGE LIMITS, WHICH HAVE BEEN SET BY THE STRUCTURAL ENGINEER WHEN DESIGNING THE BULKHEAD, BUT WILL NOT NECESSARILY BE REFLECTED IN POST-CONSTRUCTION CONDITIONS (CHECK AS-BUILT PLANS). MAXIMUM DESIGN DREDGE DEPTHS SHOWN ON THIS DRAWING ARE FOR INFORMATIONAL PURPOSES ONLY AND ARE ASSOCIATED WITH POTENTIAL FUTURE EXPANSION OF THE NEW BEDFORD MARINE COMMERCE TERMINAL.

3. MAXIMUM DESIGN DREDGE DEPTHS SHOWN ON THIS DRAWING DO NOT CONSTITUTE INSTRUCTIONS TO THE CONTRACTOR IN ASSOCIATION WITH THE WORK DESCRIBED WITHIN THE CONTRACT DOCUMENTS. CONTRACTOR SHALL REFER TO THE BOTTOM OF DREDGE CONTRACT DRAWINGS FOR MAXIMUM DREDGE DEPTHS ASSOCIATED WITH THE CONTRACT DOCUMENTS.

4. IN ORDER TO MAINTAIN ABILITY OF FACILITY TO SUPPORT THE ABOVE-LISTED LOADING CONDITIONS OVER THE LIFE OF THE FACILITY (ESTIMATED TO BE 50 YEARS, BUT DEPENDANT ON DEGREE OF MAINTENANCE COMPLETED), THE FOLLOWING ACTIONS SHALL BE TAKEN BY THE OWNER:

- DOCUMENTED YEARLY INSPECTIONS OF THE STEEL SHEETING AND PILINGS.
- RE-COATING OF THE STEEL SHEETING AND PILINGS EVERY 5-10 YEARS POST-CONSTRUCTION, BASED UPON RESULTS OF YEARLY INSPECTIONS.
- DOCUMENTED YEARLY EVALUATION OF THE NEED FOR AN IMPRESSED CATHODIC PROTECTION SYSTEM BEGINNING 5 YEARS POST-CONSTRUCTION.
- INSTALLATION OF AN IMPRESSED CATHODIC PROTECTION SYSTEM NOT MORE THAN 15 YEARS POST-CONSTRUCTION, UNLESS YEARLY INSPECTIONS NOTE ITS NECESSITY BEFORE THAT TIME.
- DOCUMENTED YEARLY EVALUATION OF THE LOADING CAPACITY OF THE FACILITY BEGINNING 30 YEARS POST-CONSTRUCTION.

5. SECURITY FOR SITE HAS NOT YET BEEN DESIGNED. A SECURITY PLAN AND OPERATIONAL PLAN SHALL BE DESIGNED BEFORE FACILITY OPERATION AND SHALL BE SUBMITTED FOR REVIEW TO THE US COAST GUARD, THE US DEPARTMENT OF HOMELAND SECURITY, THE CITY OF NEW BEDFORD, AND THE NEW BEDFORD HARBOR DEVELOPMENT COMMISSION.

6. DESIGN VESSEL FOR DEEP DRAFT AREA AND CHANNEL: LENGTH: 143M (469 FT), BREADTH/BEAM: 23M (75.5 FT), MAX DRAFT: 7.2M (23.6 FT). ALL OTHER VESSELS TO BE INDEPENDENTLY EVALUATED. APPROVAL FOR VESSELS TO TRANSIT TO THE NEW BEDFORD MARINE COMMERCE TERMINAL MUST BE OBTAINED FROM THE NORTHEAST MARINE PILOTS PRIOR TO TRANSIT AND BERTHING. TUG ASSIST REQUIRED FOR ALL VESSELS TRANSITING TO AND FROM THE NEW BEDFORD MARINE COMMERCE TERMINAL.

7. PLEASE NOTE THAT MAINTENANCE DREDGING FOR THE FEDERAL CHANNEL, FEDERAL MANEUVERING AREA, AND FEDERAL TURNING BASIN HAVE NOT BEEN COMPLETED RECENTLY. THEREFORE, BATHYMETRY WITHIN THE FEDERAL CHANNEL, FEDERAL MANEUVERING AREA, AND FEDERAL TURNING BASIN MAY BE SHALLOWER THAN BATHYMETRY WITHIN THE CHANNEL AND BOAT BASIN FOR THE NEW BEDFORD MARINE COMMERCE TERMINAL. OTHER NAVIGATIONAL RESTRICTIONS APPROACHING OR WITHIN NEW BEDFORD HARBOR MAY ALSO EXIST. SEE USACE AND NOAA CHARTS FOR EXISTING BATHYMETRY WITHIN FEDERAL CHANNEL, FEDERAL MANEUVERING AREA, AND FEDERAL TURNING BASIN.

8. BATHYMETRY OF CHANNEL AND BOAT BASIN FOR THE NEW BEDFORD MARINE COMMERCE TERMINAL TO BE SURVEYED ONCE PER YEAR TO CONFIRM EXISTING CONDITIONS AND TO DETERMINE IF MAINTENANCE DREDGING IS REQUIRED. DREDGING TO BE COMPLETED AS NEEDED TO MAINTAIN NAVIGATIONAL DEPTHS AS SHOWN ON CONTRACT DRAWINGS.

9. NAVIGATIONAL AID LOCATIONS TO BE CHECKED TWICE PER YEAR, PRIOR TO EACH VESSEL TRANSITING TO NEW BEDFORD MARINE COMMERCE TERMINAL AND/OR IF NOTED TO BE OUT OF ALIGNMENT. NAVIGATIONAL AIDS TO BE RELOCATED OR REPLACED AS NECESSARY TO MAINTAIN LOCATIONS AS SHOWN ON THE CONTRACT DRAWINGS.

10. SITE GRADING TO BE MAINTAINED AS SHOWN ON THE CONTRACT DRAWINGS. SUBSURFACE PERFORATED HDPE STORMWATER COLLECTOR PIPES AND ASSOCIATE CRUSHED STONE TO BE REPAIRED OR REPLACED AS NECESSARY TO MAINTAIN SITE DRAINAGE.

CHESTER H. MYERS ENVIRONMENTAL No. 45554 REGISTERED PROFESSIONAL ENGINEER COMMONWEALTH OF MASSACHUSETTS 11-13-12

THOMAS E. BILLUPS CIVIL No. 32836 REGISTERED PROFESSIONAL ENGINEER COMMONWEALTH OF MASSACHUSETTS 11/12/12

JOHN A. DeRUGERIS CIVIL No. 32842 REGISTERED PROFESSIONAL ENGINEER COMMONWEALTH OF MASSACHUSETTS 11/12/12

APEX
ROCKVILLE, MD
SOUTH WINDSOR, CT - BOSTON, MA - NEW BEDFORD, MA - HOLYOKE, MA
184 HIGH STREET, SUITE 502
BOSTON, MA 02210
58H CONNECTICUT AVENUE
SOUTH WINDSOR, CT

This drawings prepared by Apex for this project are instruments of Apex's service for use solely with respect to this project, and Apex shall be deemed the author of the Drawing and shall retain all common law, statutory and other reserved rights with respect thereto, including the copyright. The Documents shall not be used on other projects, for additions to this project or for completion of this project by others, except by agreement in writing and with appropriate compensation to Apex.

GZA GeoEnvironmental, Inc. Engineers and Scientists
530 Broadway
Providence, RI 02909
(401) 421-4140
cleengineering

PROJECT
NEW BEDFORD MARINE COMMERCE TERMINAL

OWNER
MASSACHUSETTS CLEAN ENERGY CENTER
55 SUMMER STREET, 9TH FLOOR
BOSTON, MA

NO.	DATE	DESCRIPTION	BY
3.	6/29/12	SHUSTER FACILITY	CWM
2.	3/16/12	STORMWATER NOTES	CWM
1.	12/23/11	FOR CONSTRUCTION	TEB

PROJECT NO.	6690
CADD FILE	UPLAND_GRADING
DESIGNED BY	CWM
DRAWN BY	CWM
CHECKED BY	CHM
DATE	8-8-11
DRAWING SCALE	1"=80'

GRAPHIC SCALE
SCALE: 1"=80'
0 40 80 160

SHEET TITLE
FACILITY USAGE PLAN

DRAWING NO.
T-5

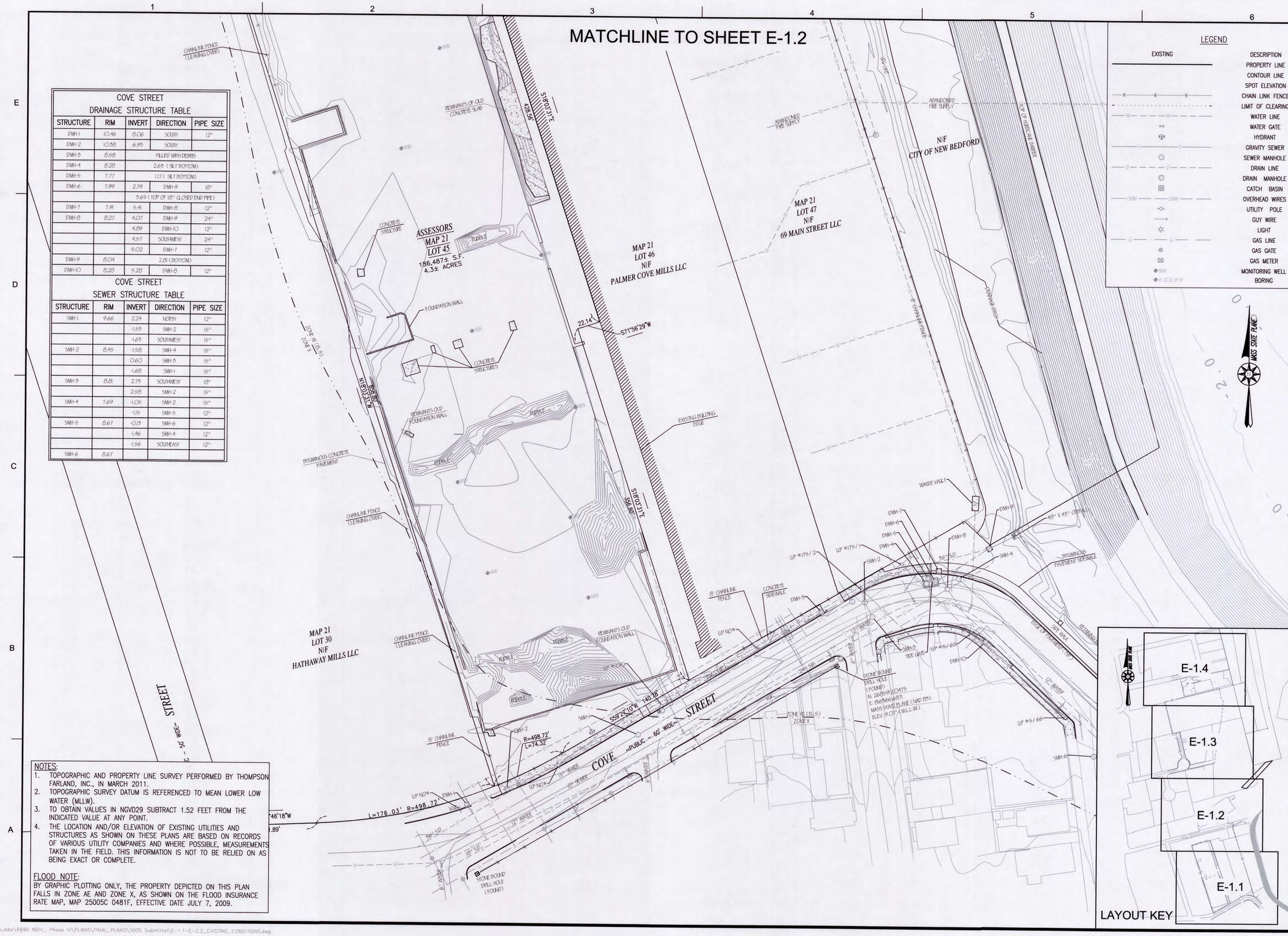

COVE STREET DRAINAGE STRUCTURE TABLE

STRUCTURE	RIM	INVERT	DIRECTION	PIPE SIZE
DMH-1	10.46	8.06	SOUTH	12"
DMH-2	10.38	6.93	SOUTH	
DMH-3	8.58	FILLED WITH DEBRIS		
DMH-4	8.28	2.63 (SILT BOTTOM)		
DMH-5	7.77	1.17 (SILT BOTTOM)		
DMH-6	7.99	2.79	DMH-9	18"
		5.65 (TOP OF 18" CLOSED END PIPE)		
DMH-7	7.91	5.41	DMH-8	12"
DMH-8	8.27	4.07	DMH-9	24"
		4.89	DMH-10	12"
		4.57	SOUTHWEST	24"
		5.02	DMH-7	12"
DMH-9	8.04	2.81 (BOTTOM)		
DMH-10	8.28	5.28	DMH-8	12"

COVE STREET SEWER STRUCTURE TABLE

STRUCTURE	RIM	INVERT	DIRECTION	PIPE SIZE
SMH-1	9.66	2.24	NORTH	12"
		-1.93	SMH-2	15"
		-1.63	SOUTHWEST	15"
SMH-2	8.46	-1.58	SMH-4	15"
		0.60	SMH-3	15"
		-1.68	SMH-1	15"
SMH-3	8.81	2.75	SOUTHWEST	18"
		2.58	SMH-2	15"
SMH-4	7.69	-1.06	SMH-2	15"
		-1.19	SMH-5	12"
SMH-5	8.67	-0.13	SMH-6	12"
		-1.46	SMH-4	12"
		-1.96	SOUTHEAST	12"
SMH-6	8.67			

NOTES:
1. TOPOGRAPHIC AND PROPERTY LINE SURVEY PERFORMED BY THOMPSON FARLAND, INC., IN MARCH 2011.
2. TOPOGRAPHIC SURVEY DATUM IS REFERENCED TO MEAN LOWER LOW WATER (MLLW).
3. TO OBTAIN VALUES IN NGVD29 SUBTRACT 1.52 FEET FROM THE INDICATED VALUE AT ANY POINT.
4. THE LOCATION AND/OR ELEVATION OF EXISTING UTILITIES AND STRUCTURES AS SHOWN ON THESE PLANS ARE BASED ON RECORDS OF VARIOUS UTILITY COMPANIES AND WHERE POSSIBLE, MEASUREMENTS TAKEN IN THE FIELD. THIS INFORMATION IS NOT TO BE RELIED ON AS BEING EXACT OR COMPLETE.

FLOOD NOTE:
BY GRAPHIC PLOTTING ONLY, THE PROPERTY DEPICTED ON THIS PLAN FALLS IN ZONE AE AND ZONE X, AS SHOWN ON THE FLOOD INSURANCE RATE MAP, MAP 25005C 0481F, EFFECTIVE DATE JULY 7, 2009.

LEGEND

EXISTING	DESCRIPTION
	PROPERTY LINE
	CONTOUR LINE
	SPOT ELEVATION
	CHAIN LINK FENCE
	LIMIT OF CLEARING
	WATER LINE
	WATER GATE
	HYDRANT
	GRAVITY SEWER
	SEWER MANHOLE
	DRAIN LINE
	DRAIN MANHOLE
	CATCH BASIN
	OVERHEAD WIRES
	UTILITY POLE
	GUY WIRE
	LIGHT
	GAS LINE
	GAS GATE
	GAS METER
	MONITORING WELL
	BORING

APEX
ROCKVILLE, MD
SOUTH WINDSOR, CT - BOSTON, MA - NEW BEDFORD, MA - HOLYOKE, MA
184 HIGH STREET, SUITE 502
BOSTON, MA 02210
58H CONNECTICUT AVENUE
SOUTH WINDSOR, CT

This drawings prepared by Apex for this project are instruments of Apex's service for use solely with respect to this project, and Apex shall be deemed the author of the Drawing and shall retain all common law, statutory and other reserved rights with respect thereto, including the copyright. The Documents shall not be used on other projects, for additions to this project or for completion of this project by others, except by agreement in writing and with appropriate compensation to Apex.

COMMONWEALTH OF MASSACHUSETTS
CHESTER H. MYERS
ENVIRONMENTAL
NO. 45554
7/13/12
REGISTERED PROFESSIONAL ENGINEER

PROJECT
NEW BEDFORD MARINE COMMERCE TERMINAL

OWNER
MASSACHUSETTS CLEAN ENERGY CENTER
55 SUMMER STREET, 9TH FLOOR
BOSTON, MASSACHUSETTS

NO.	DATE	DESCRIPTION	BY
2	03/05/12	EX. COND. UPDATE	CWM
1	12/23/11	FOR CONSTRUCTION	CHM

PROJECT NO.	6690
CADD FILE	E-1.1-E-2.2_EXISTING_CONDITIONS
DESIGNED BY	GCD
DRAWN BY	GCD
CHECKED BY	CMM
DATE	08/04/2011
DRAWING SCALE	1"=40'

SHEET TITLE
EXISTING CONDITIONS UPLAND SHEET 1

DRAWING NO.
E-1.1

P:\Jobs\6690 NBH_ Phase IV\PLANS\FINAL_PLANS\100% Submittal\E-1.1-E-2.2_EXISTING_CONDITIONS.dwg

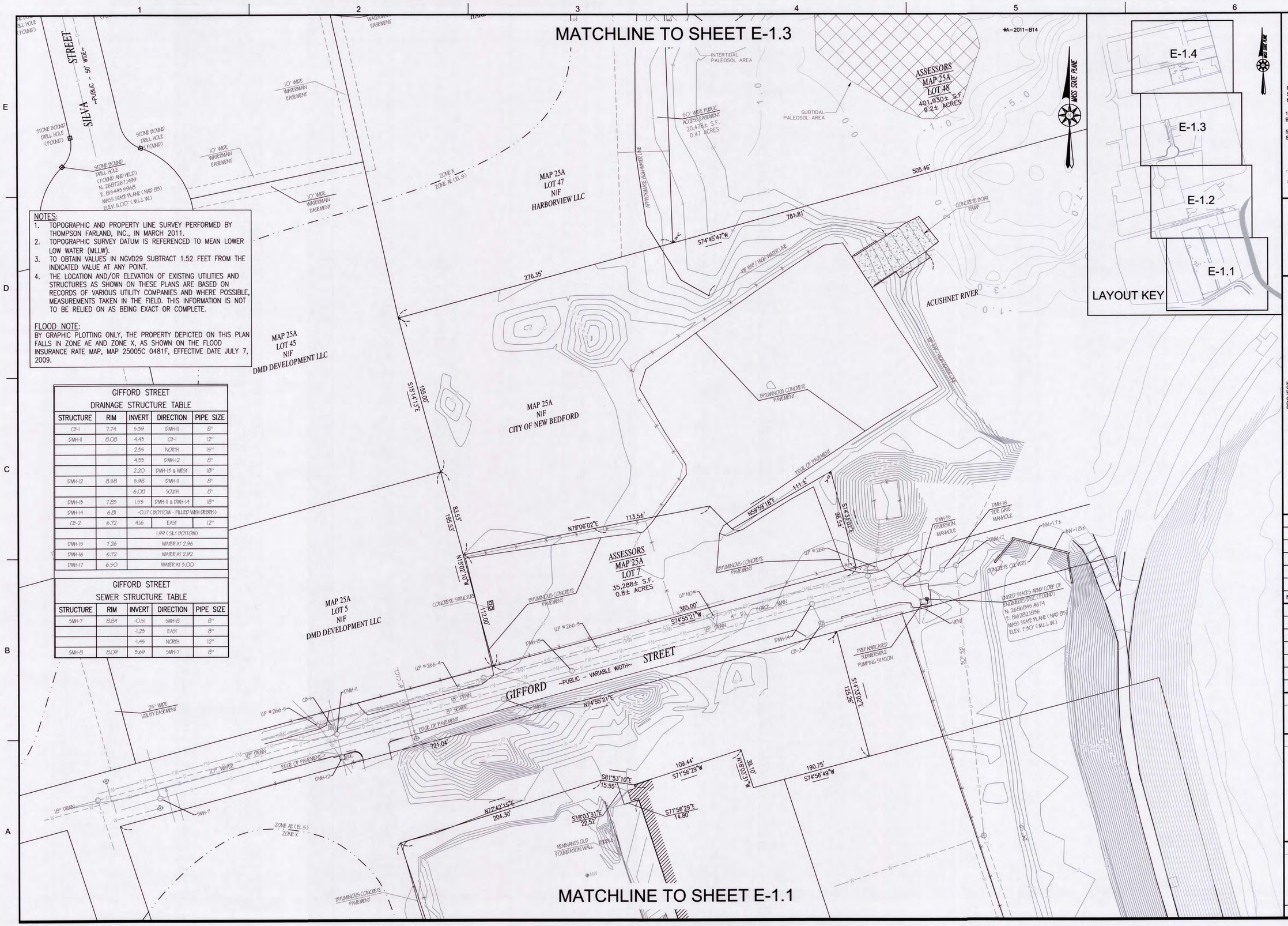

NOTES:

1. TOPOGRAPHIC AND PROPERTY LINE SURVEY PERFORMED BY THOMPSON FARLAND, INC., IN MARCH 2011.
2. TOPOGRAPHIC SURVEY DATUM IS REFERENCED TO MEAN LOWER LOW WATER (MLLW).
3. TO OBTAIN VALUES IN NGVD29 SUBTRACT 1.52 FEET FROM THE INDICATED VALUE AT ANY POINT.
4. THE LOCATION AND/OR ELEVATION OF EXISTING UTILITIES AND STRUCTURES AS SHOWN ON THESE PLANS ARE BASED ON RECORDS OF VARIOUS UTILITY COMPANIES AND WHERE POSSIBLE, MEASUREMENTS TAKEN IN THE FIELD. THIS INFORMATION IS NOT TO BE RELIED ON AS BEING EXACT OR COMPLETE.

FLOOD NOTE:
BY GRAPHIC PLOTTING ONLY, THE PROPERTY DEPICTED ON THIS PLAN FALLS IN ZONE AE AND ZONE X, AS SHOWN ON THE FLOOD INSURANCE RATE MAP, MAP 25005C 0481F, EFFECTIVE DATE JULY 7, 2009.

GIFFORD STREET
DRAINAGE STRUCTURE TABLE

STRUCTURE	RIM	INVERT	DIRECTION	PIPE SIZE
CB-1	7.74	5.59	DMH-11	8"
DMH-11	8.08	4.45	CB-1	12"
		2.56	NORTH	15"
		4.55	DMH-12	8"
		2.20	DMH-13 & WEST	18"
DMH-12	8.98	5.98	DMH-11	8"
		6.08	SOUTH	8"
DMH-13	7.83	1.53	DMH-11 & DMH-14	18"
DMH-14	6.81	-0.17 (BOTTOM - FILLED WITH DEBRIS)		
CB-2	6.72	4.16	EAST	12"
		1.99 (SILT BOTTOM)		
DMH-15	7.26	WATER AT 2.96		
DMH-16	6.72	WATER AT 2.92		
DMH-17	6.50	WATER AT 3.00		

GIFFORD STREET
SEWER STRUCTURE TABLE

STRUCTURE	RIM	INVERT	DIRECTION	PIPE SIZE
SMH-7	8.84	-0.51	SMH-8	8"
		-1.25	EAST	8"
		-1.45	NORTH	12"
SMH-8	8.09	3.69	SMH-7	8"

APEX

ROCKVILLE, MD
SOUTH WINDSOR, CT - BOSTON, MA - NEW BEDFORD, MA - HOLYOKE, MA

184 HIGH STREET, SUITE 502
BOSTON, MA 02210

58H CONNECTICUT AVENUE
SOUTH WINDSOR, CT

This drawings prepared by Apex for this project are instruments of Apex's service for use solely with respect to this project, and Apex shall be deemed the author of the Drawing and shall retain all common law, statutory and other reserved rights with respect thereto, including the copyright. The Documents shall not be used on other projects, for additions to this project or for completion of this project by others, except by agreement in writing and with appropriate compensation to Apex.

COMMONWEALTH OF MASSACHUSETTS
CHESTER H. MYERS
ENVIRONMENTAL
NO. 45654
REGISTERED PROFESSIONAL ENGINEER

PROJECT
NEW BEDFORD MARINE COMMERCE TERMINAL

OWNER
MASSACHUSETTS CLEAN ENERGY CENTER
55 SUMMER STREET, 9TH FLOOR
BOSTON, MASSACHUSETTS

NO.	DATE	DESCRIPTION	BY
2	03/05/12	EX. COND. UPDATE	CWM
1	12/23/11	FOR CONSTRUCTION	CHM

PROJECT NO.	6690
CADD FILE	E-1.1-E-2.2_EXISTING_CONDITIONS
DESIGNED BY	GCD
DRAWN BY	GCD
CHECKED BY	CMM
DATE	08/04/2011
DRAWING SCALE	1"=40'

GRAPHIC SCALE
SCALE: 1"=40'
0 20 40 80

SHEET TITLE
EXISTING CONDITIONS UPLAND SHEET 2

DRAWING NO.
E-1.2

P:\Jobs\6690 NBH_ Phase IV\PLANS\FINAL_PLANS\100% Submittal\E-1.1-E-2.2_EXISTING_CONDITIONS.dwg

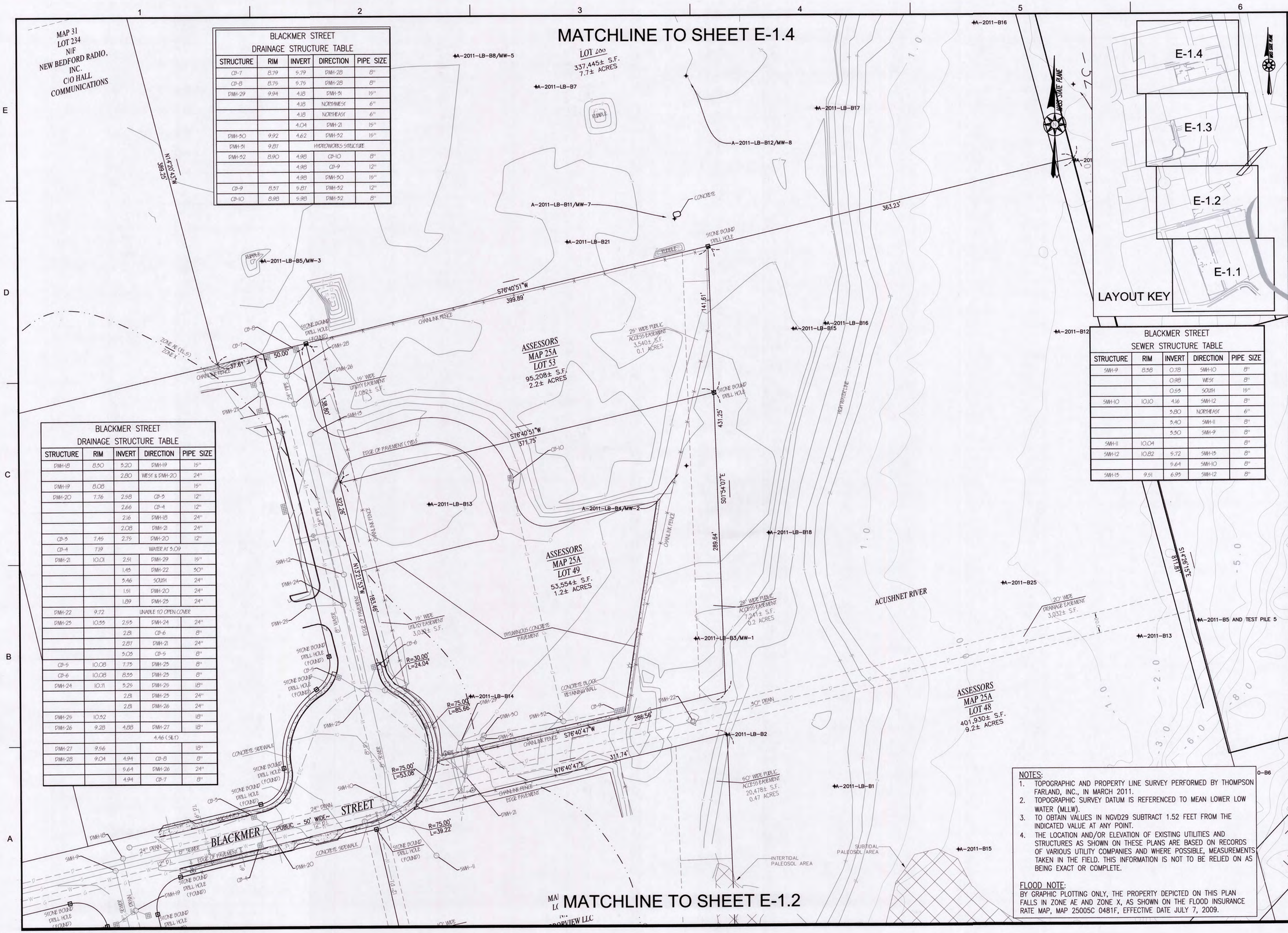

BLACKMER STREET DRAINAGE STRUCTURE TABLE				
STRUCTURE	RIM	INVERT	DIRECTION	PIPE SIZE
CB-7	8.79	5.79	DMH-28	8"
CB-8	8.79	5.79	DMH-28	8"
DMH-29	9.94	4.18	DMH-31	15"
		4.18	NORTHWEST	6"
		4.18	NORTHEAST	6"
		4.04	DMH-21	15"
DMH-30	9.92	4.62	DMH-32	15"
DMH-31	9.87	HYDROWORKS STRUCTURE		
DMH-32	8.90	4.98	CB-10	8"
		4.98	CB-9	12"
		4.98	DMH-30	15"
CB-9	8.37	5.87	DMH-32	12"
CB-10	8.98	5.98	DMH-32	8"

BLACKMER STREET DRAINAGE STRUCTURE TABLE				
STRUCTURE	RIM	INVERT	DIRECTION	PIPE SIZE
DMH-18	8.30	3.20	DMH-19	15"
		2.80	WEST & DMH-20	24"
DMH-19	8.08			15"
DMH-20	7.76	2.98	CB-3	12"
		2.66	CB-4	12"
		2.16	DMH-18	24"
		2.08	DMH-21	24"
CB-3	7.45	2.75	DMH-20	12"
CB-4	7.19	WATER AT 3.09		
DMH-21	10.01	2.91	DMH-29	15"
		1.45	DMH-22	30"
		3.46	SOUTH	24"
		1.91	DMH-20	24"
		1.89	DMH-23	24"
DMH-22	9.72	UNABLE TO OPEN COVER		
DMH-23	10.55	2.55	DMH-24	24"
		2.81	CB-6	8"
		2.87	DMH-21	24"
		3.05	CB-5	8"
CB-5	10.08	7.75	DMH-25	8"
CB-6	10.08	8.35	DMH-25	8"
DMH-24	10.71	3.25	DMH-25	18"
		2.81	DMH-23	24"
		2.81	DMH-26	24"
DMH-25	10.52			18"
DMH-26	9.28	4.88	DMH-27	18"
		4.46 (SILT)		
DMH-27	9.56			18"
DMH-28	9.04	4.94	CB-8	8"
		5.64	DMH-26	24"
		4.94	CB-7	8"

BLACKMER STREET SEWER STRUCTURE TABLE				
STRUCTURE	RIM	INVERT	DIRECTION	PIPE SIZE
SMH-9	8.38	0.78	SMH-10	8"
		0.98	WEST	8"
		0.53	SOUTH	15"
SMH-10	10.10	4.16	SMH-12	8"
		3.80	NORTHEAST	6"
		3.40	SMH-11	8"
		3.30	SMH-9	8"
SMH-11	10.04			8"
SMH-12	10.82	5.72	SMH-13	8"
		5.64	SMH-10	8"
SMH-13	9.51	6.95	SMH-12	8"

NOTES:
1. TOPOGRAPHIC AND PROPERTY LINE SURVEY PERFORMED BY THOMPSON FARLAND, INC., IN MARCH 2011.
2. TOPOGRAPHIC SURVEY DATUM IS REFERENCED TO MEAN LOWER LOW WATER (MLLW).
3. TO OBTAIN VALUES IN NGVD29 SUBTRACT 1.52 FEET FROM THE INDICATED VALUE AT ANY POINT.
4. THE LOCATION AND/OR ELEVATION OF EXISTING UTILITIES AND STRUCTURES AS SHOWN ON THESE PLANS ARE BASED ON RECORDS OF VARIOUS UTILITY COMPANIES AND WHERE POSSIBLE, MEASUREMENTS TAKEN IN THE FIELD. THIS INFORMATION IS NOT TO BE RELIED ON AS BEING EXACT OR COMPLETE.

FLOOD NOTE:
BY GRAPHIC PLOTTING ONLY, THE PROPERTY DEPICTED ON THIS PLAN FALLS IN ZONE AE AND ZONE X, AS SHOWN ON THE FLOOD INSURANCE RATE MAP, MAP 25005C 0481F, EFFECTIVE DATE JULY 7, 2009.

APEX

ROCKVILLE, MD
SOUTH WINDSOR, CT - BOSTON, MA - NEW BEDFORD, MA - HOLYOKE, MA

184 HIGH STREET, SUITE 502
BOSTON, MA 02210

58H CONNECTICUT AVENUE
SOUTH WINDSOR, CT

This drawings prepared by Apex for this project are instruments of Apex's service for use solely with respect to this project, and Apex shall be deemed the author of the Drawing and shall retain all common law, statutory and other reserved rights with respect thereto, including the copyright. The Documents shall not be used on other projects, for additions to this project or for completion of this project by others, except by agreement in writing and with appropriate compensation to Apex.

COMMONWEALTH OF MASSACHUSETTS
CHESTER H. MYERS
ENVIRONMENTAL
NO. 45654
REGISTERED PROFESSIONAL ENGINEER

PROJECT
NEW BEDFORD MARINE COMMERCE TERMINAL

OWNER
MASSACHUSETTS CLEAN ENERGY CENTER
55 SUMMER STREET, 9TH FLOOR
BOSTON, MASSACHUSETTS

NO.	DATE	DESCRIPTION	BY
1	12/23/11	FOR CONSTRUCTION	CHM

PROJECT NO.	6690
CADD FILE	E-1.1-E-2.2_EXISTING_CONDITIONS
DESIGNED BY	GCD
DRAWN BY	GCD
CHECKED BY	CMM
DATE	08/04/2011
DRAWING SCALE	1"=40'

GRAPHIC SCALE
SCALE: 1"=40'
0 20 40 80

SHEET TITLE
EXISTING CONDITIONS UPLAND SHEET 3

DRAWING NO.
E-1.3

P:\Jobs\6690 NBH_ Phase IV\PLANS\FINAL_PLANS\100% Submittal\E-1.1-E-2.2_EXISTING_CONDITIONS.dwg

WRIGHT STREET DRAINAGE STRUCTURE TABLE				
STRUCTURE	RIM	INVERT	DIRECTION	PIPE SIZE
DMH-33	11.95	7.19	CB-11	15"
		7.66	CB-12	15"
		-2.45	DMH-34 & WEST	66"
CB-11	11.21	7.51	DMH-33	15"
CB-12	11.26	7.26 TO TOP OF DEBRIS		
DMH-34	12.37	4.72	DMH-39	15"
		-2.17	DMH-33 & 35	66"
DMH-35	12.46	-2.84	DMH-34 & 36	66"
DMH-36	12.10	-3.95	DMH-35 & NORTH	66"
DMH-37	8.79	-4.45 (BOTTOM)		
DMH-38	15.04	-5.16	DMH-37 & 40	72"
DMH-39	9.91	5.56	DMH-34	15"
		5.61	CB-13	12"
		5.61	CB-14	12"
CB-13	9.29	6.59	DMH-39	12"
CB-14	9.50	5.95	DMH-39	12"
DMH-40	7.24	-5.36 (BOTTOM)		

WRIGHT STREET SEWER STRUCTURE TABLE				
STRUCTURE	RIM	INVERT	DIRECTION	PIPE SIZE
SMH-14	11.80	4.79	NORTH	8"
		4.79	SMH-15	10"
		4.69	WEST	12"
SMH-15	12.84	5.45	NORTH & SOUTH	10"
		5.55	SMH-14	10"
SMH-16	12.92	5.68	E. S. & W.	6""
		5.58	NORTH	10"
SMH-17	10.88			

NOTES:

1. TOPOGRAPHIC AND PROPERTY LINE SURVEY PERFORMED BY THOMPSON FARLAND, INC., IN MARCH 2011.
2. TOPOGRAPHIC SURVEY DATUM IS REFERENCED TO MEAN LOWER LOW WATER (MLLW).
3. TO OBTAIN VALUES IN NGVD29 SUBTRACT 1.52 FEET FROM THE INDICATED VALUE AT ANY POINT.
4. THE LOCATION AND/OR ELEVATION OF EXISTING UTILITIES AND STRUCTURES AS SHOWN ON THESE PLANS ARE BASED ON RECORDS OF VARIOUS UTILITY COMPANIES AND WHERE POSSIBLE, MEASUREMENTS TAKEN IN THE FIELD. THIS INFORMATION IS NOT TO BE RELIED ON AS BEING EXACT OR COMPLETE.

FLOOD NOTE:

BY GRAPHIC PLOTTING ONLY, THE PROPERTY DEPICTED ON THIS PLAN FALLS IN ZONE AE AND ZONE X, AS SHOWN ON THE FLOOD INSURANCE RATE MAP, MAP 25005C 0481F, EFFECTIVE DATE JULY 7, 2009.

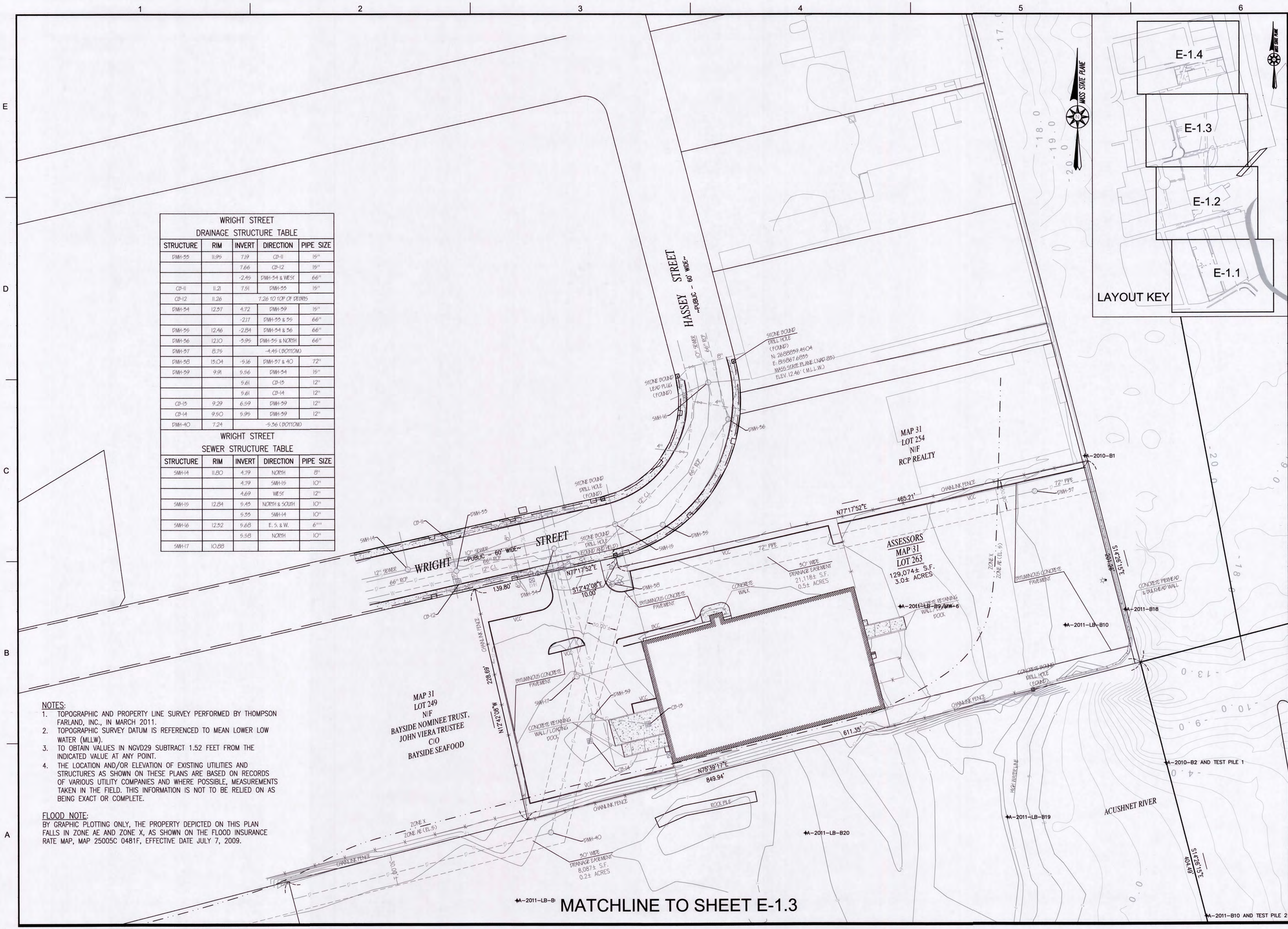

APEX

ROCKVILLE, MD
SOUTH WINDSOR, CT - BOSTON, MA - NEW BEDFORD, MA - HOLYOKE, MA

184 HIGH STREET, SUITE 502
BOSTON, MA 02210

58H CONNECTICUT AVENUE
SOUTH WINDSOR, CT

This drawings prepared by Apex for this project are instruments of Apex's service for use solely with respect to this project, and Apex shall be deemed the author of the Drawing and shall retain all common law, statutory and other reserved rights with respect thereto, including the copyright. The Documents shall not be used on other projects, for additions to this project or for completion of this project by others, except by agreement in writing and with appropriate compensation to Apex.

COMMONWEALTH OF MASSACHUSETTS
CHESTER H. MYERS
ENVIRONMENTAL
NO. 45554
8/8/11
REGISTERED PROFESSIONAL ENGINEER

PROJECT
NEW BEDFORD MARINE COMMERCE TERMINAL

OWNER
MASSACHUSETTS CLEAN ENERGY CENTER
55 SUMMER STREET, 9TH FLOOR
BOSTON, MASSACHUSETTS

NO.	DATE	DESCRIPTION	BY
1	12/23/11	FOR CONSTRUCTION	CHM

PROJECT NO.	6690
CADD FILE	E-1.1-E-2.2_EXISTING_CONDITIONS
DESIGNED BY	GCD
DRAWN BY	GCD
CHECKED BY	CMM
DATE	08/04/2011
DRAWING SCALE	1"=40'

GRAPHIC SCALE
SCALE: 1"=40'
0 20 40 80

SHEET TITLE
EXISTING CONDITIONS UPLAND SHEET 4

DRAWING NO.
E-1.4

P:\Jobs\6690 NBH_ Phase IV\PLANS\FINAL_PLANS\100% Submittal\E-1.1-E-2.2_EXISTING_CONDITIONS.dwg

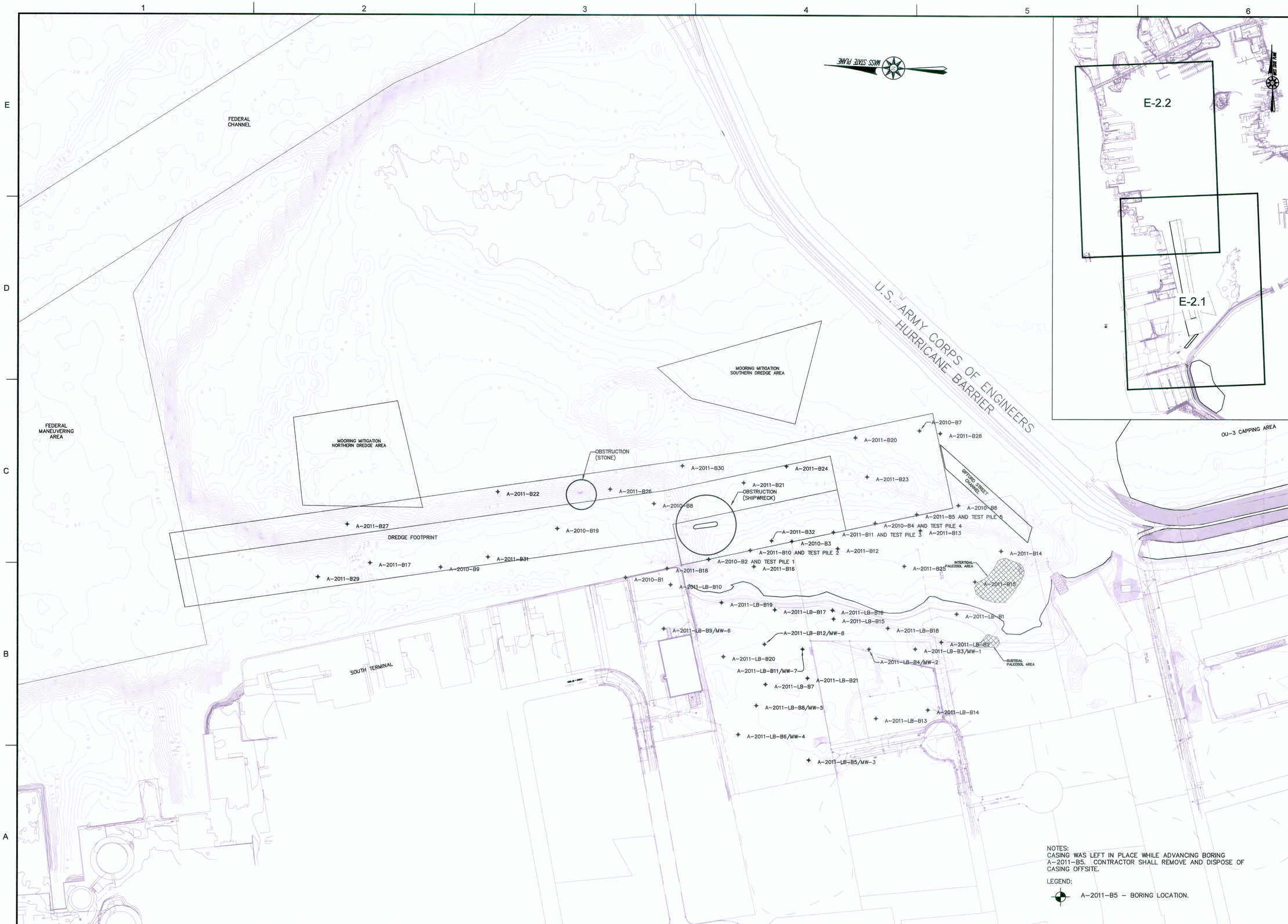

NOTES:
CASING WAS LEFT IN PLACE WHILE ADVANCING BORING A-2011-B5. CONTRACTOR SHALL REMOVE AND DISPOSE OF CASING OFFSITE.

LEGEND:

A-2011-B5 – BORING LOCATION.

APEX

ROCKVILLE, MD
SOUTH WINDSOR, CT - BOSTON, MA - NEW BEDFORD, MA - HOLYOKE, MA

184 HIGH STREET, SUITE 502
BOSTON, MA 02210

58H CONNECTICUT AVENUE
SOUTH WINDSOR, CT

This drawings prepared by Apex for this project are instruments of Apex's service for use solely with respect to this project, and Apex shall be deemed the author of the Drawing and shall retain all common law, statutory and other reserved rights with respect thereto, including the copyright. The Documents shall not be used on other projects, for additions to this project or for completion of this project by others, except by agreement in writing and with appropriate compensation to Apex.

COMMONWEALTH OF MASSACHUSETTS
CHESTER H. MYERS
ENVIRONMENTAL
NO. 45554
08/04/11
REGISTERED PROFESSIONAL ENGINEER

PROJECT
NEW BEDFORD MARINE COMMERCE TERMINAL

OWNER
MASSACHUSETTS CLEAN ENERGY CENTER
55 SUMMER STREET, 9TH FLOOR
BOSTON, MASSACHUSETTS

NO.	DATE	DESCRIPTION	BY
3	06/28/12	MOORING MIT. UPDATE	CWM
2	03/05/12	EX. COND. UPDATE	CWM
1	12/23/11	FOR CONSTRUCTION	CHM

PROJECT NO.	6690
CADD FILE	E-1.1-E-2.2_EXISTING_CONDITIONS
DESIGNED BY	GCD
DRAWN BY	GCD
CHECKED BY	CMM
DATE	08/04/2011
DRAWING SCALE	1"=150'

GRAPHIC SCALE
SCALE: 1"=150'
0 75 150 300

SHEET TITLE
EXISTING CONDITIONS DREDGE FOOTPRINT SHEET 1

DRAWING NO.
E-2.1

P:\Jobs\6690 NBH_ Phase IV\PLANS\FINAL_PLANS\100% Submittal\E-1.1-E-2.2_EXISTING_CONDITIONS.dwg

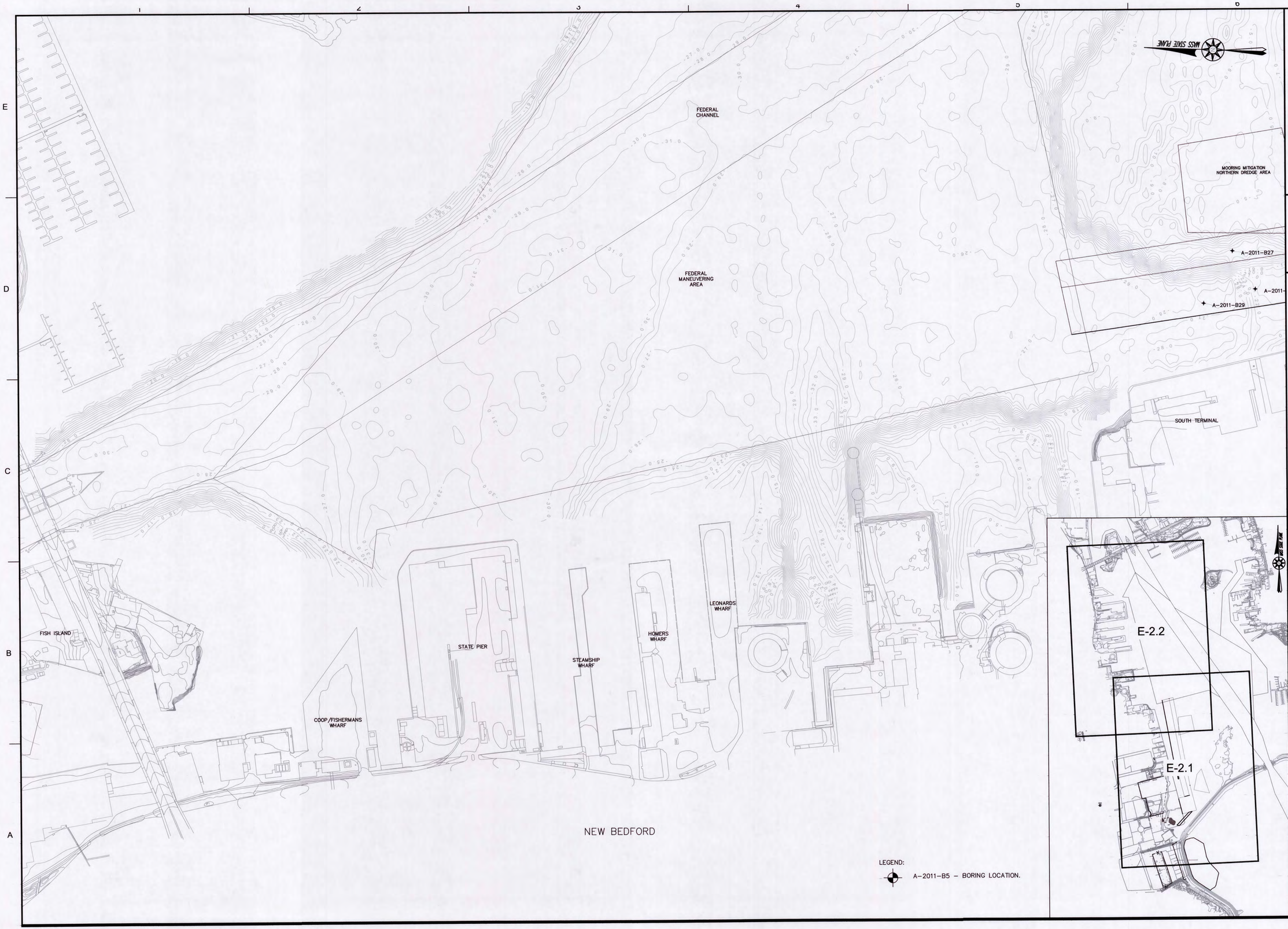

APEX

ROCKVILLE, MD
SOUTH WINDSOR, CT - BOSTON, MA - NEW BEDFORD, MA - HOLYOKE, MA

184 HIGH STREET, SUITE 502
BOSTON, MA 02210

58H CONNECTICUT AVENUE
SOUTH WINDSOR, CT

This drawings prepared by Apex for this project are instruments of Apex's service for use solely with respect to this project, and Apex shall be deemed the author of the Drawing and shall retain all common law, statutory and other reserved rights with respect thereto, including the copyright. The Documents shall not be used on other projects, for additions to this project or for completion of this project by others, except by agreement in writing and with appropriate compensation to Apex.

COMMONWEALTH OF MASSACHUSETTS
CHESTER H. MYERS
ENVIRONMENTAL
NO. 45654
REGISTERED PROFESSIONAL ENGINEER

PROJECT
NEW BEDFORD MARINE COMMERCE TERMINAL

OWNER
MASSACHUSETTS CLEAN ENERGY CENTER
55 SUMMER STREET, 9TH FLOOR
BOSTON, MASSACHUSETTS

NO.	DATE	DESCRIPTION	BY
2	6/28/12	MOORING MIT UPDATE	CWM
1	12/23/11	FOR CONSTRUCTION	CHM

PROJECT NO.	6690
CADD FILE	E-1.1-E-2.2_EXISTING_CONDITIONS
DESIGNED BY	GCD
DRAWN BY	GCD
CHECKED BY	CMM
DATE	08/04/2011
DRAWING SCALE	1"=150'

GRAPHIC SCALE
SCALE: 1"=150'
0 75 150 300

SHEET TITLE
EXISTING CONDITIONS DREDGE FOOTPRINT SHEET 2

DRAWING NO.
E-2.2

P:\Jobs\6690 NBH_ Phase IV\PLANS\FINAL_PLANS\100% Submittal\E-1.1-E-2.2_EXISTING_CONDITIONS.dwg

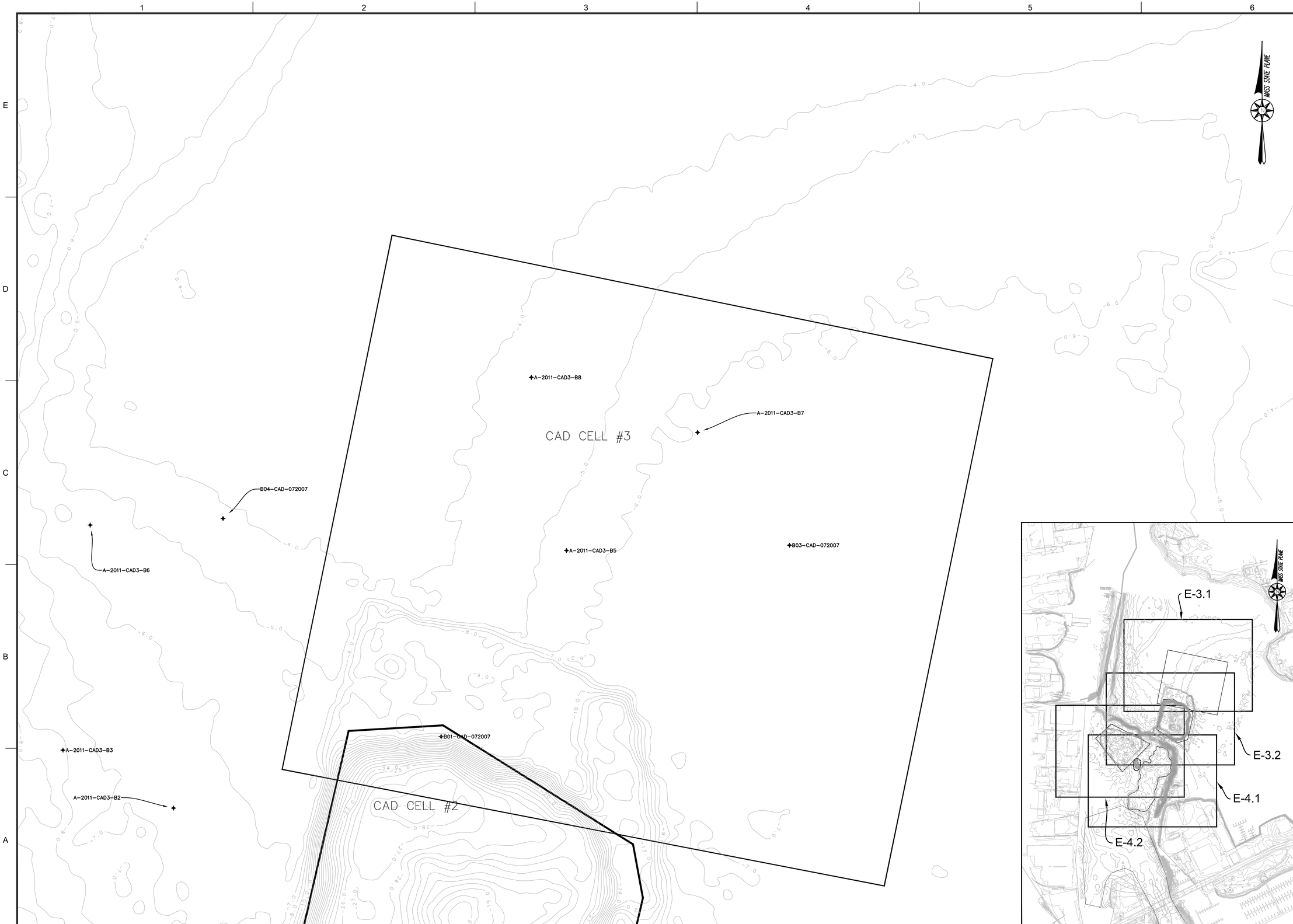

APEX

ROCKVILLE, MD
SOUTH WINDSOR, CT - BOSTON, MA - NEW BEDFORD, MA - HOLYOKE, MA

184 HIGH STREET, SUITE 502
BOSTON, MA 02210

58H CONNECTICUT AVENUE
SOUTH WINDSOR, CT

This drawings prepared by Apex for this project are instruments of Apex's service for use solely with respect to this project, and Apex shall be deemed the author of the Drawing and shall retain all common law, statutory and other reserved rights with respect thereto, including the copyright. The Documents shall not be used on other projects, for additions to this project or for completion of this project by others, except by agreement in writing and with appropriate compensation to Apex.

COMMONWEALTH OF MASSACHUSETTS
CHESTER M. MYERS
ENVIRONMENTAL
NO. 45651
1/12/12
REGISTERED PROFESSIONAL ENGINEER

PROJECT
NEW BEDFORD
MARINE COMMERCE
TERMINAL

OWNER
MASSACHUSETTS CLEAN ENERGY CENTER
55 SUMMER STREET, 9TH FLOOR
BOSTON, MASSACHUSETTS

NO.	DATE	DESCRIPTION	BY
1	12/23/11	FOR CONSTRUCTION	CHM

PROJECT NO.	6690
CADD FILE	E-3.1-E-5.3_EXISTING_CONDITIONS
DESIGNED BY	GCD
DRAWN BY	GCD
CHECKED BY	CMM
DATE	08/04/2011
DRAWING SCALE	1"=50'

GRAPHIC SCALE
SCALE: 1"=50'
0 25 50 75 125 FEET

SHEET TITLE
EXISTING CONDITIONS CAD CELL #3

DRAWING NO.
E-3.1

NOTES:
CAD CELL #2 DXF AND OR DWG FILE SHALL BE PROVIDED TO THE CONTRACTOR UPON WRITTEN REQUEST.

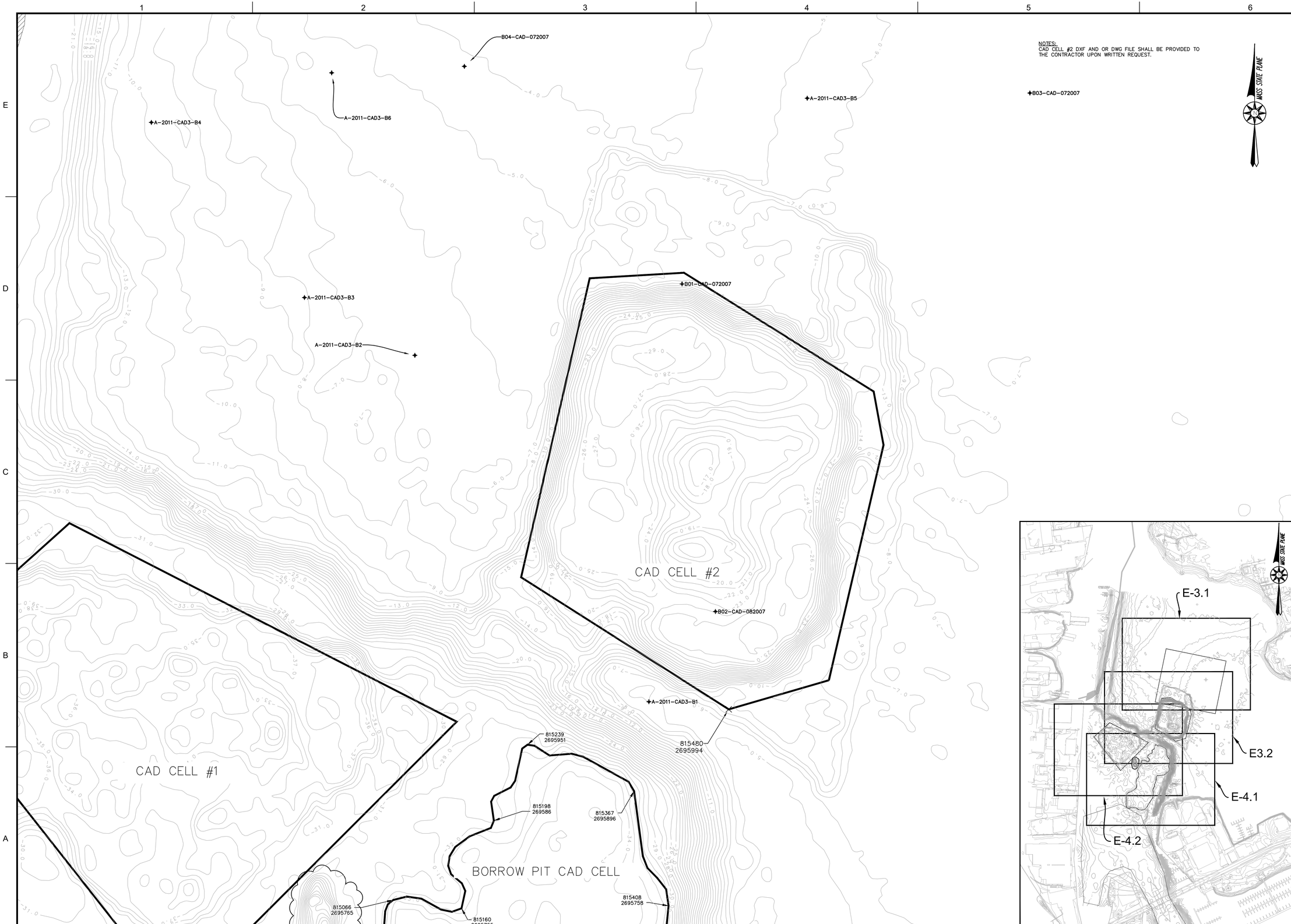

APEX

ROCKVILLE, MD
SOUTH WINDSOR, CT - BOSTON, MA - NEW BEDFORD, MA - HOLYOKE, MA

184 HIGH STREET, SUITE 502
BOSTON, MA 02210

58H CONNECTICUT AVENUE
SOUTH WINDSOR, CT

This drawings prepared by Apex for this project are instruments of Apex's service for use solely with respect to this project, and Apex shall be deemed the author of the Drawing and shall retain all common law, statutory and other reserved rights with respect thereto, including the copyright. The Documents shall not be used on other projects, for additions to this project or for completion of this project by others, except by agreement in writing and with appropriate compensation to Apex.

COMMONWEALTH OF MASSACHUSETTS
CHESTER H. MYERS
ENVIRONMENTAL
NO. 45551
12/23/11
REGISTERED PROFESSIONAL ENGINEER

PROJECT
NEW BEDFORD
MARINE COMMERCE
TERMINAL

OWNER
MASSACHUSETTS CLEAN ENERGY CENTER
55 SUMMER STREET, 9TH FLOOR
BOSTON, MASSACHUSETTS

NO.	DATE	DESCRIPTION	BY
1	12/23/11	FOR CONSTRUCTION	CHM

PROJECT NO.	6690
CADD FILE	E-3.1-E-5.3_EXISTING_CONDITIONS
DESIGNED BY	GCD
DRAWN BY	GCD
CHECKED BY	CMM
DATE	08/04/2011
DRAWING SCALE	1"=50'

GRAPHIC SCALE
SCALE: 1"=50'
0 25 50 75 125 FEET

SHEET TITLE
EXISTING CONDITIONS CAD CELL #2 DISPOSAL AREA

DRAWING NO.
E-3.2

CAD CELL #1
NO DREDGE/NO SPUD

CAD CELL #2

BORROW PIT CAD CELL
NO DREDGE/NO SPUD

✦A-2011-CAD3-B1

815239
2695951

815480
2695994

815198
269586

815367
2695896

815408
2695758

815066
2695765

815160
2695755

815066
2695716

SUBMERGED OBSTRUCTION

815403
2695650

815357
2695600

815252
2695579

815027
2695558

MOORINGS, SEE GENERAL NOTES.

815207
2695410

815002
2695426

814968
2695401

814897
2695364

814890
2695290

814898
2695193

815980
2695197

815139
2695212

815035
2695175

NIEMIEC MARINE

POPE'S ISLAND

FEDERAL CHANNEL

-32.0

NOTES:
BORROW PIT DXF AND OR DWG FILE SHALL BE PROVIDED TO THE CONTRACTOR UPON WRITTEN REQUEST.

MASS STATE PLANE

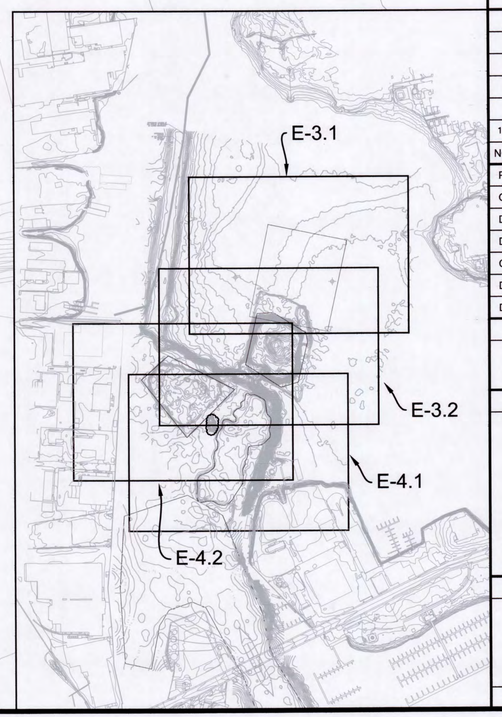

APEX

ROCKVILLE, MD
SOUTH WINDSOR, CT - BOSTON, MA - NEW BEDFORD, MA - HOLYOKE, MA

184 HIGH STREET, SUITE 502
BOSTON, MA 02210

58H CONNECTICUT AVENUE
SOUTH WINDSOR, CT

This drawings prepared by Apex for this project are instruments of Apex's service for use solely with respect to this project, and Apex shall be deemed the author of the Drawing and shall retain all common law, statutory and other reserved rights with respect thereto, including the copyright. The Documents shall not be used on other projects, for additions to this project or for completion of this project by others, except by agreement in writing and with appropriate compensation to Apex.

COMMONWEALTH OF MASSACHUSETTS
CHESTER H. MYERS
ENVIRONMENTAL
NO. 45654
12/18/12
REGISTERED PROFESSIONAL ENGINEER

PROJECT
NEW BEDFORD
MARINE COMMERCE
TERMINAL

OWNER
MASSACHUSETTS CLEAN ENERGY CENTER
55 SUMMER STREET, 9TH FLOOR
BOSTON, MASSACHUSETTS

NO.	DATE	DESCRIPTION	BY
1	12/23/11	FOR CONSTRUCTION	CHM

PROJECT NO.	6690
CADD FILE	E-3.1-E-5.3_EXISTING_CONDITIONS
DESIGNED BY	GCD
DRAWN BY	GCD
CHECKED BY	CMM
DATE	08/04/2011
DRAWING SCALE	1"=50'

GRAPHIC SCALE
SCALE: 1"=50'
0 25 50 100

SHEET TITLE
EXISTING CONDITIONS BORROW PIT CAD CELL

DRAWING NO.
E-4.1

P:\Jobs\6690 NBH_ Phase IV\PLANS\FINAL_PLANS\100% Submittal\E-3.1-E-5.3_EXISTING_CONDITIONS.DWG

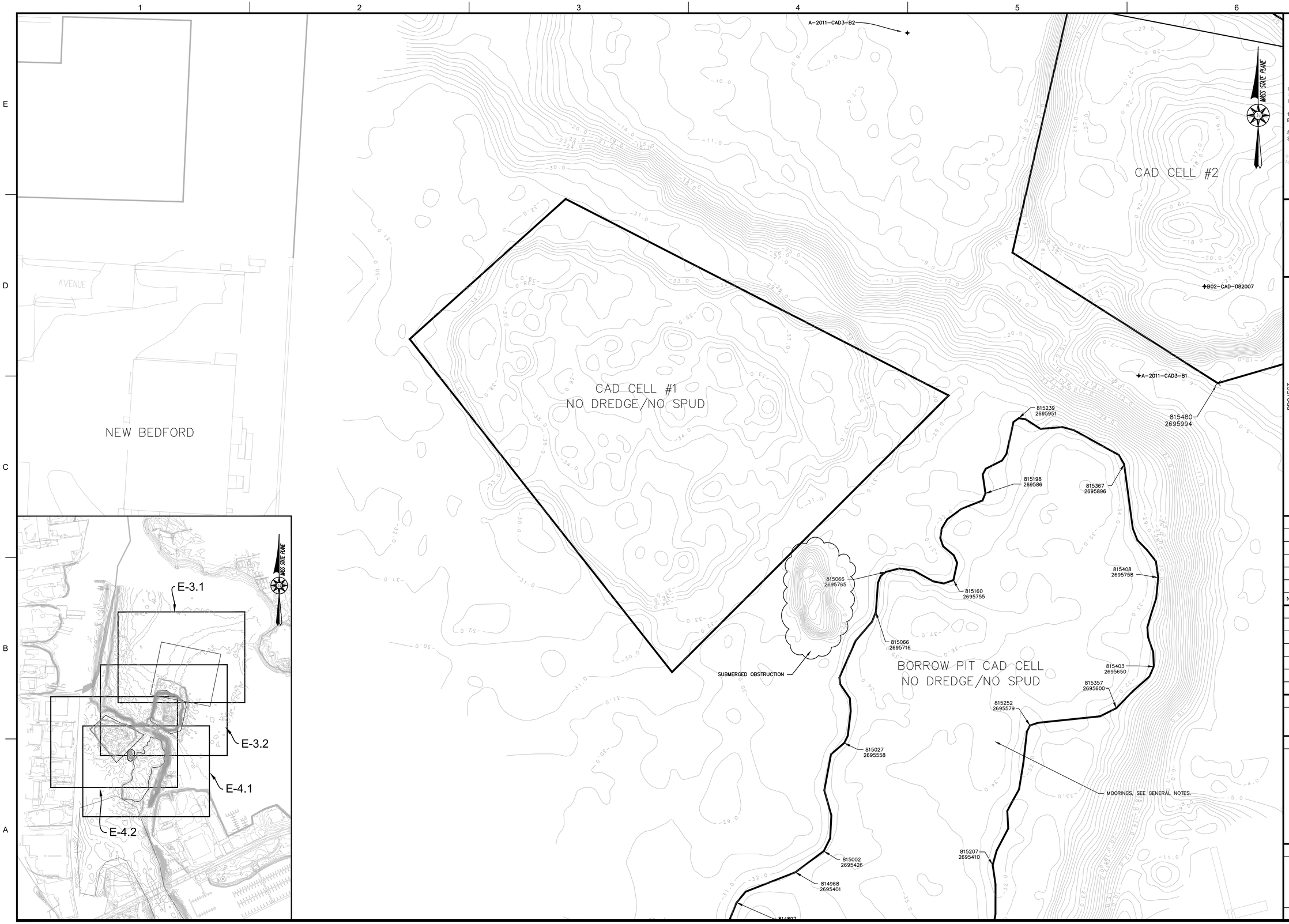

APEX

ROCKVILLE, MD
SOUTH WINDSOR, CT - BOSTON, MA - NEW BEDFORD, MA - HOLYOKE, MA

184 HIGH STREET, SUITE 502
BOSTON, MA 02210

58H CONNECTICUT AVENUE
SOUTH WINDSOR, CT

This drawings prepared by Apex for this project are instruments of Apex's service for use solely with respect to this project, and Apex shall be deemed the author of the Drawing and shall retain all common law, statutory and other reserved rights with respect thereto, including the copyright. The Documents shall not be used on other projects, for additions to this project or for completion of this project by others, except by agreement in writing and with appropriate compensation to Apex.

COMMONWEALTH OF MASSACHUSETTS
CHESTER M. MYERS
ENVIRONMENTAL
NO. 45654
1/6/12
REGISTERED PROFESSIONAL ENGINEER

PROJECT
NEW BEDFORD
MARINE COMMERCE
TERMINAL

OWNER
MASSACHUSETTS CLEAN ENERGY CENTER
55 SUMMER STREET, 9TH FLOOR
BOSTON, MASSACHUSETTS

NO.	DATE	DESCRIPTION	BY
1	12/23/11	FOR CONSTRUCTION	CHM

PROJECT NO.	6690
CADD FILE	E-3.1-E-5.3_EXISTING_CONDITIONS
DESIGNED BY	GCD
DRAWN BY	GCD
CHECKED BY	CMM
DATE	08/04/2011
DRAWING SCALE	1"=50'

GRAPHIC SCALE
SCALE: 1"=50'
0 25 50 100

SHEET TITLE
EXISTING
CONDITIONS
CAD CELL #1

DRAWING NO.
E-4.2

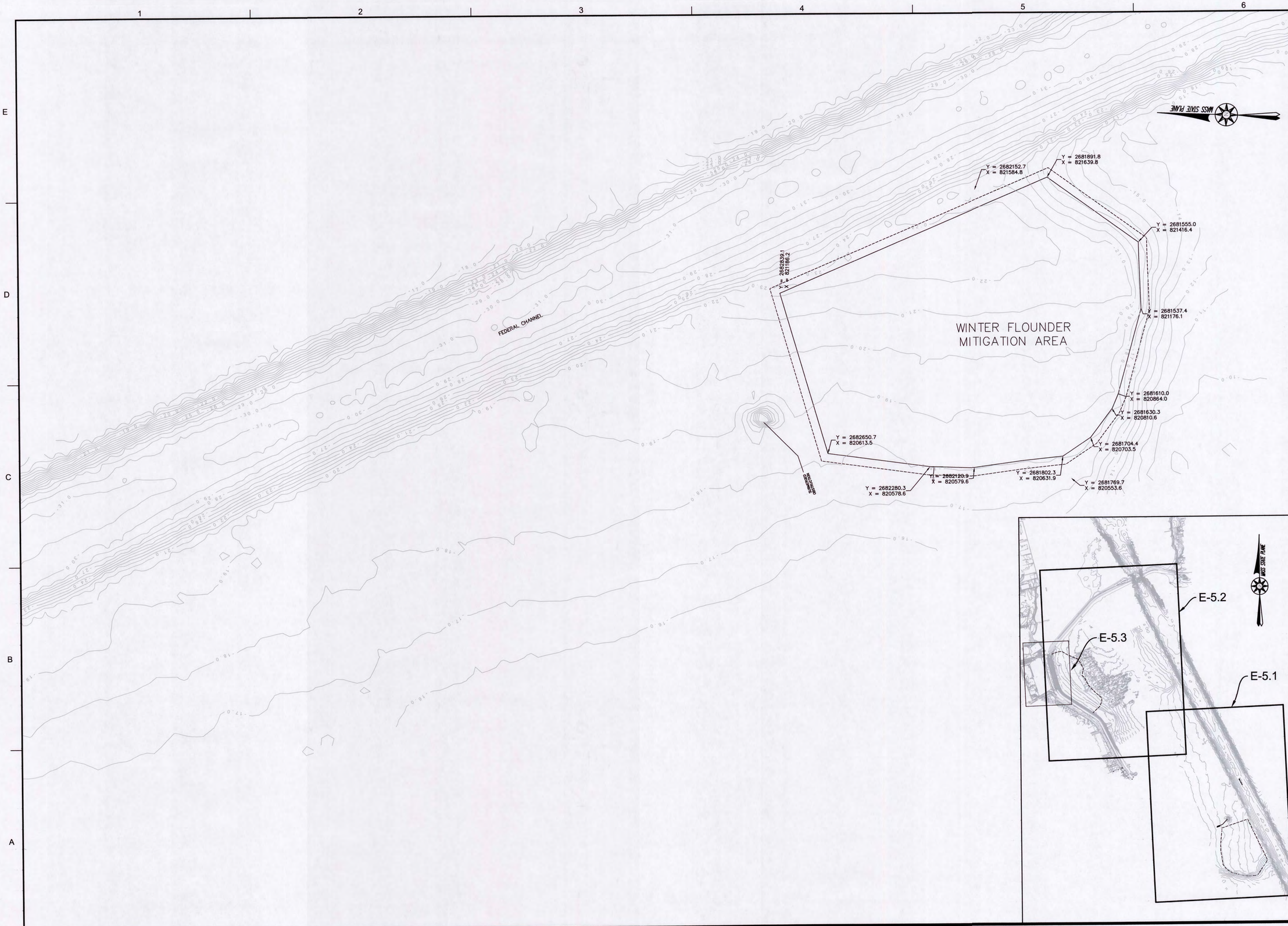

APEX

ROCKVILLE, MD
SOUTH WINDSOR, CT - BOSTON, MA - NEW BEDFORD, MA - HOLYOKE, MA

184 HIGH STREET, SUITE 502
BOSTON, MA 02210

58H CONNECTICUT AVENUE
SOUTH WINDSOR, CT

This drawings prepared by Apex for this project are instruments of Apex's service for use solely with respect to this project, and Apex shall be deemed the author of the Drawing and shall retain all common law, statutory and other reserved rights with respect thereto, including the copyright. The Documents shall not be used on other projects, for additions to this project or for completion of this project by others, except by agreement in writing and with appropriate compensation to Apex.

COMMONWEALTH OF MASSACHUSETTS
CHESTER H. MYERS
ENVIRONMENTAL
NO. 45654
8/17/11
REGISTERED PROFESSIONAL ENGINEER

PROJECT

NEW BEDFORD
MARINE COMMERCE
TERMINAL

OWNER

MASSACHUSETTS CLEAN ENERGY CENTER
55 SUMMER STREET, 9TH FLOOR
BOSTON, MASSACHUSETTS

NO.	DATE	DESCRIPTION	BY
1	12/23/11	FOR CONSTRUCTION	CHM

PROJECT NO.	6690
CADD FILE	E-3.1-E-5.3_EXISTING_CONDITIONS
DESIGNED BY	GCD
DRAWN BY	GCD
CHECKED BY	CMM
DATE	08/04/2011
DRAWING SCALE	1"=150'

GRAPHIC SCALE

SCALE: 1"=150'

0 75 150 300

SHEET TITLE

EXISTING
CONDITIONS
WINTER FLOUNDER
MITIGATION
AREA

DRAWING NO.

E-5.1

P:\Jobs\6690 NBH_ Phase IV\PLANS\FINAL_PLANS\100% Submittal\E-3.1-E-5.3_EXISTING_CONDITIONS.DWG

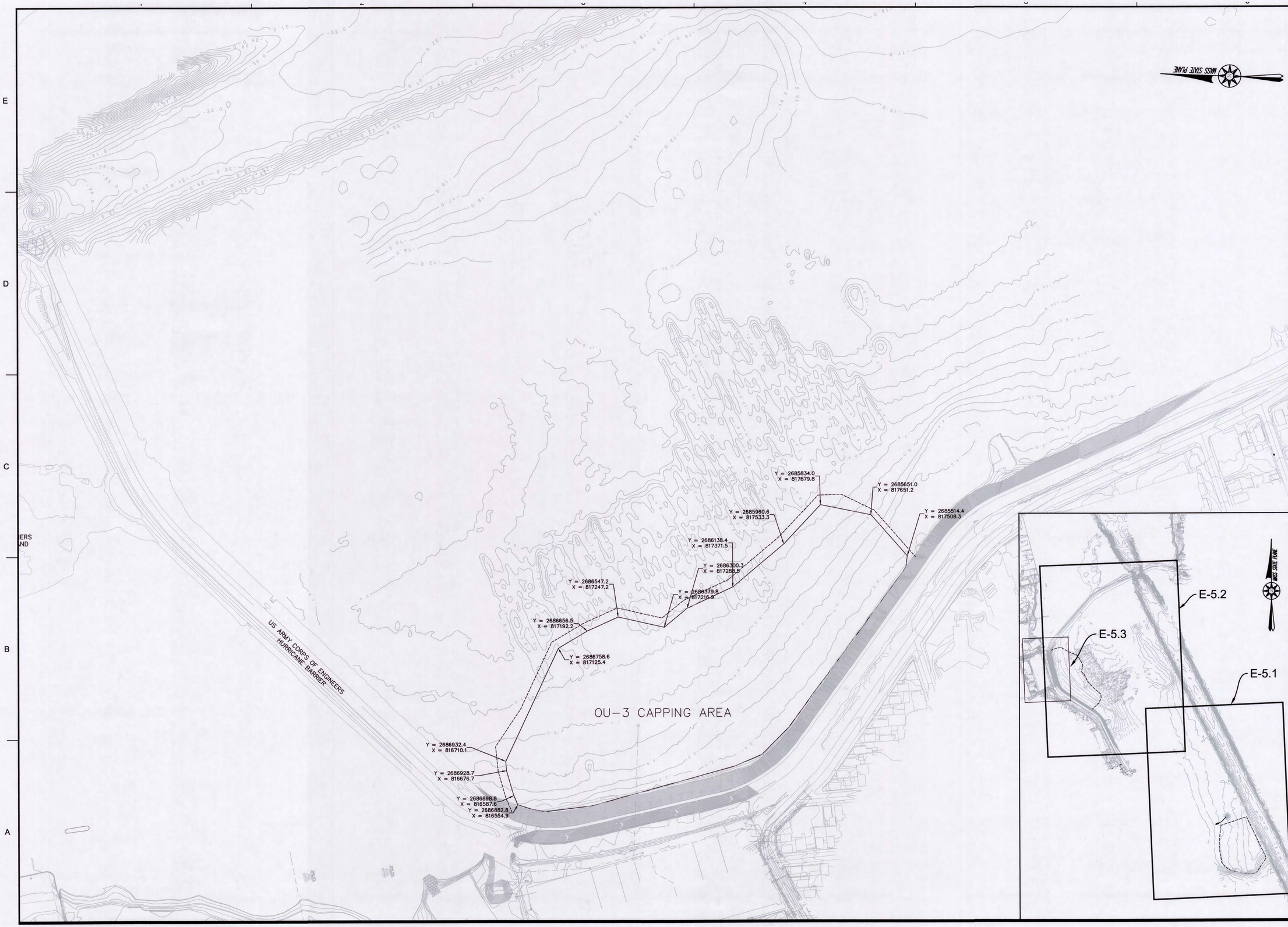

APEX

ROCKVILLE, MD
SOUTH WINDSOR, CT - BOSTON, MA - NEW BEDFORD, MA - HOLYOKE, MA

184 HIGH STREET, SUITE 502
BOSTON, MA 02210

58H CONNECTICUT AVENUE
SOUTH WINDSOR, CT

This drawings prepared by Apex for this project are instruments of Apex's service for use solely with respect to this project, and Apex shall be deemed the author of the Drawing and shall retain all common law, statutory and other reserved rights with respect thereto, including the copyright. The Documents shall not be used on other projects, for additions to this project or for completion of this project by others, except by agreement in writing and with appropriate compensation to Apex.

COMMONWEALTH OF MASSACHUSETTS
CHESTER H. MYERS
ENVIRONMENTAL
NO. 45654
7/13/12
REGISTERED
PROFESSIONAL ENGINEER

PROJECT

NEW BEDFORD
MARINE COMMERCE
TERMINAL

OWNER

MASSACHUSETTS CLEAN ENERGY CENTER
55 SUMMER STREET, 9TH FLOOR
BOSTON, MASSACHUSETTS

NO.	DATE	DESCRIPTION	BY
2	03/16/12	EX. COND. UPDATE	CWM
1	12/23/11	FOR CONSTRUCTION	CHM

PROJECT NO.	6690
CADD FILE	E-3.1-E-5.3_EXISTING_CONDITIONS
DESIGNED BY	GCD
DRAWN BY	GCD
CHECKED BY	CWM
DATE	08/04/2011
DRAWING SCALE	1"=150'

GRAPHIC SCALE

SCALE: 1"=150'

0 75 150 300

SHEET TITLE

EXISTING
CONDITIONS
OU-3
CAPPING AREA

DRAWING NO.

E-5.2

P:\Jobs\6690 NBH_ Phase IV\PLANS\FINAL_PLANS\100% Submittal\E-3.1-E-5.3_EXISTING_CONDITIONS.DWG

THIS SHEET INTENTIONALLY LEFT BLANK

APEX

ROCKVILLE, MD
SOUTH WINDSOR, CT - BOSTON, MA -
NEW BEDFORD, MA - HOLYOKE, MA

184 HIGH STREET, SUITE 502
BOSTON, MA 02210

58H CONNECTICUT AVENUE
SOUTH WINDSOR, CT

This drawings prepared by Apex for this project are instruments of Apex's service for use solely with respect to this project, and Apex shall be deemed the author of the Drawing and shall retain all common law, statutory and other reserved rights with respect thereto, including the copyright. The Documents shall not be used on other projects, for additions to this project or for completion of this project by others, except by agreement in writing and with appropriate compensation to Apex.

PROJECT

NEW BEDFORD
MARINE COMMERCE
TERMINAL

OWNER

MASSACHUSETTS CLEAN ENERGY CENTER
55 SUMMER STREET, 9TH FLOOR
BOSTON, MASSACHUSETTS

NO.	DATE	DESCRIPTION	BY
2	03/15/12	EX. COND. UPDATE	CWM
1	12/23/11	FOR CONSTRUCTION	CHM

PROJECT NO.	6690
CADD FILE	E-3.1-E-5.3_EXISTING_CONDITIONS
DESIGNED BY	GCD
DRAWN BY	GCD
CHECKED BY	
DATE	08/04/2011
DRAWING SCALE	1"=50'

GRAPHIC SCALE

SCALE: 1"=50'

0 25 50 100

SHEET TITLE

BLANK
SHEET

DRAWING NO.

E-5.3

P:\Jobs\6690 NBH_ Phase IV\PLANS\FINAL_PLANS\100% Submittal\E-3.1-E-5.3_EXISTING_CONDITIONS.DWG

CONSTRUCTION SEQUENCE FOR CELL CONSTRUCTION:
1. STRIP ALL UNSUITABLE MATERIAL & DISPOSE OF AS CALLED FOR IN SPECIFICATIONS.
2. EXCAVATE ALL OTHER UNSUITABLE MATERIAL AS DIRECTED IN FIELD BY ENGINEER; DISPOSE OF IN ACCORDANCE WITH DREDGING SPECIFICATIONS.
3. IF BLASTING OPTION IS ACCEPTED, PRE-SPLIT AND BLAST ROCK BY DRILL & BLAST METHOD FROM DREDGE LIMIT LINE SHOWN TO 30' OFFSHORE SO AS TO COMPLETE ALL BLASTING IN VICINITY OF CELL.
4. SET & DRIVE PILES WITHIN CELLS & SET FALSE WORK AND DRIVE SHEETS TO DEPTHS CALLED FOR.
5. PLACE FILL IN CELL & MONITOR FOLLOWING SEQUENCE CALLED FOR IN SPECIFICATIONS.
6. COMPLETE DREDGING TO REQUIRED DEPTHS (MAY BE CONCURRENT WITH OTHER SUBSEQUENT WORK ITEMS).
7. SOCKET AND/OR DRIVE PILES OUTSIDE OF CELLS & TEST AS CALLED FOR IN SPECIFICATIONS.
8. GRADE AREA IN FRONT OF CELL AS SHOWN IN SECTIONS; PLACE FILTERS AND ARMORFLEX 70L MATTRESS PANELS TO BE 8' W X 21' LONG. ANCHOR IN PLACE WITH 3" GALV PIPE DRIVEN FLUSH WITH TOP OF CONCRETE.
9. COMPLETE FILL AND CONSTRUCT RELIEVING PLATFORM & OFFSHORE FACE.

ADDENDUM #2

NOTES ON "S" SERIES DRAWING FOR BULKHEAD AND ADJOINING STRUCTURES
THESE ARE GENERAL NOTES AND ARE MEANT AS A GUIDE TO THE WRITTEN SPECIFICATIONS THAT ACCOMPANY THESE DOCUMENTS:

MATERIALS:

ALL PIPE PILES TO BE GRADE A-690, 57,000 PSI YIELD

ALL SHEETPILES FOR CELLS TO BE GRADE A-690, 50,000 PSI YIELD

ALL KING PILES AND WALERS TO BE A-588 GRADE B, 50,000 PSI YIELD

ALL STEEL EXPOSED TO SALT WATER TO BE COATED (BOTH SIDES) IN ACCORDANCE WITH SPECIFICATIONS AND TO THE LIMITS SHOWN ON PLANS

ALL SHEETPILES AND PIPE PILES DRIVEN TO REFUSAL IN ROCK TO HAVE HARDENED CUTTING SHOES INSTALLED BEFORE DRIVING. SOCKETED PIPE PILES AND KING PILES DO NOT REQUIRE CUTTING SHOES. ENGINEER WILL DETERMINE BY DRIVING CONDITIONS IF SHEET PILES THAT ARE NOT DRIVEN TO REFUSAL REQUIRE "OPTIONAL" CUTTING SHOES (SEE SECTIONS S6-1 & S7-1).

ALL CONCRETE HAS BEEN DESIGNED IN ACCORDANCE WITH ACI-318 08, ALL MIXES, REINFORCEMENT, PLACEMENT, CURING, FROST PROTECTION AND THE LIKE SHALL BE PERFORMED IN ACCORDANCE WITH THIS CODE SEE CONCRETE NOTES BELOW.

WATERPROOF MEMBRANE: SEE SPECIFICATION SECTION 07130

DREDGING DEPTHS SHOWN ON THESE PLANS ARE FOR GENERAL INFORMATION ONLY, REFER TO DREDGING PLANS AND SPECIFICATIONS FOR MORE SPECIFIC DETAILS.

STEEL PIPE PILES

STEEL PIPE PILING SHALL CONFORM TO ASTM A 690 AND SHALL HAVE PROPERTIES EQUIVALENT TO THOSE LISTED:

PILING PROPERTIES:
PILES SHALL BE 30" DIAMETER BY 1", 3/4" AND 5/8" WALL THICKNESS AS SHOWN ON THE PLANS.

PILES SHALL BE 24" DIAMETER BY 5/8" WALL THICKNESS AS SHOWN ON THE PLANS.

MINIMUM GRADE 57 (MINIMUM YIELD POINT = 57 KIPS PER SQUARE INCH).

PILE SIZE	TYPE	DESIGN CAPACITY (TONS)	ALLOWABLE CAPACITY (TONS)	ULTIMATE CAPACITY (TONS)
24" X 5/8" WALL	SOCKETED	450	601	1000
24" X 5/8" WALL	DRIVEN	500	784	1306
30" X 5/8" WALL	DRIVEN	900	986	1643
30" X 3/4" WALL	DRIVEN	1000	1178	1963
30" X 1" WALL	SOCKETED	1000	1288	2146

CONCRETE

CONCRETE WORK SHALL CONFORM TO BUILDING CODE REQUIREMENTS FOR STRUCTURAL CONCRETE (ACI 318), AND SPECIFICATIONS FOR STRUCTURAL CONCRETE FOR BUILDINGS (ACI 301).

UNLESS NOTED OTHERWISE, CONCRETE SHALL BE AS FOLLOWS:

ITEM	F'c
PLATFORM BEAMS, STRUCTURAL SLABS, TRANSITION SLAB, PILE CAP, PILE SOCKET, BOLLARD PAD:	5,000 PSI
UTILITY TRENCH, OUTFALL, THRUST BLOCKS, DEAD MAN, CONCRETE FILLED PILES:	4,000 PSI
NON-STRUCTURAL CONCRETE (U.O.N.):	4,000 PSI

ALL CONCRETE SHALL BE AIR ENTRAINED AND CONTAIN 3 GALS OF CORROSION INHIBITOR PER CY CONFORMING TO AASHTO M 194 FOR CAST-IN-PLACE CONCRETE.

USE ACCELERATORS/ADMIXTURES TO IMPROVE WORKABILITY AND REDUCE WATER/CEMENT RATIO TO CONTROL SHRINKAGE. SUBMIT PROPOSED CONCRETE MIX TO THE ENGINEER FOR REVIEW. NO WATER SHALL BE ADDED TO THE MIX AT THE JOB SITE.

CONCRETE SHALL BE CONTROLLED CONCRETE, MIXED AND PLACED IN THE PRESENCE OF THE APPROVED TESTING AGENCY.

SIZE OF CONCRETE PLACEMENTS, UNLESS NOTED OTHERWISE, SHALL CONFORM TO ACI GUIDELINES AND RECOMMENDATIONS.

CONSTRUCTION JOINTS AND EXPANSION JOINTS SHOWN ON THE DRAWINGS ARE MANDATORY. ADDITIONAL CONSTRUCTION JOINTS AND MODIFICATIONS AS REQUIRED TO EXECUTE THE CONSTRUCTION SHALL BE SUBMITTED TO THE ENGINEER FOR APPROVAL.

CHAMFER ALL EXPOSED EDGES 1 INCH UNLESS INDICATED OTHERWISE.

A MINIMUM OF 72 HOURS SHALL ELAPSE BETWEEN ADJACENT CONCRETE PLACEMENTS.

DO NOT PLACE CONCRETE UNTIL REINFORCEMENT AND EMBEDDED ITEMS HAVE BEEN APPROVED BY THE ENGINEER AND/OR THE APPROVED TESTING AGENCY (IF/WHEN DIRECTED). PROVIDE A MINIMUM OF 24 HOURS NOTIFICATION TO THE ENGINEER.

REINFORCEMENT

REINFORCEMENT SHALL CONFORM TO BUILDING CODE REQUIREMENTS FOR STRUCTURAL CONCRETE (ACI 318), ACI DETAILING MANUAL (SP-66), CRSI MANUAL OF STANDARD PRACTICE (MSP), AND THE STRUCTURAL WELDING CODE-REINFORCING STEEL (AWS D1.4), ELECTRODES TO BE E-8018.

STEEL REINFORCEMENT SHALL CONFORM TO ASTM A615 GRADE 60

WELDED WIRE FABRIC SHALL CONFORM TO ASTM A185

ALL REINFORCEMENT SHALL BE HOT-DIPPED GALVANIZED. REINFORCING ASSEMBLIES SHALL BE WELDED BEFORE GALVANIZING WHERE POSSIBLE.

PROVIDE SUPPLEMENTAL BARS AND ACCESSORIES AS REQUIRED TO HOLD REINFORCEMENT SECURELY IN POSITION.

MINIMUM CONCRETE PROTECTIVE COVER, UNLESS NOTED OTHERWISE, SHALL BE AS FOLLOWS:

CONCRETE EXPOSED TO WEATHER 3 INCHES

CONCRETE AT ADJACENT POURS 2 INCHES

CONCRETE PLACED AGAINST EARTH 3 INCHES

ALL CONTINUOUS REINFORCEMENT SHALL BE EXTENDED AROUND CORNERS AND LAPPED AT NECESSARY SPLICES OR HOOKED AT DISCONTINUOUS ENDS. USE STANDARD HOOKS UNLESS OTHERWISE INDICATED.

LAPS SHALL BE CLASS B TENSION LAP SPLICES, UNLESS NOTED OTHERWISE.

REINFORCEMENT SHALL BE CONTINUOUS THROUGH CONSTRUCTION JOINTS. PROVIDE MECHANICAL COUPLERS WHERE REQUIRED CONTINUOUS REINFORCEMENT EXCEEDS AVAILABLE LENGTHS.

NOTES ON CELL & PLATFORM DESIGN:

CELL DESIGN:
1. CELLS ARE DESIGNED BASED ON 4096 PSF UNIFORM SOIL LOADING OR CONCENTRATED CRANE LOAD AS SHOWN BELOW, AND DESIGN DREDGE DEPTHS OF -32' AND -20' MLLW AS INDICATED ON PLANS.

PLATFORM DESIGN:
1. PLATFORM LOADS WERE BASED ON 4096 PSF LIVE UNIFORM LOAD, OR THE CRANE LOADS THAT PRODUCE THE TRACK LOADS SHOWN BELOW. ALL LIFTS LARGER THAN 250 TONS SHOULD BE REVIEWED IN ADVANCE BY AN ENGINEER FAMILIAR WITH HEAVY LIFT FACILITIES.
2. PLATFORM DESIGNED FOR 950 KIP LATERAL FORCE PERPENDICULAR TO FENDER LINE.
3. FENDERS DESIGNED FOR BERTHING ENERGY OF 65 TONNE-METERS SPREAD OVER TWO ADJACENT FENDER PANELS.
4. MOORING AND BOLLARD DESIGN LOADS FOR SHIPS WERE BASED ON 200,000 LB PARALLEL TO THE FENDER LINE AND 310,000 LB PERPENDICULAR APPLIED SIMULTANEOUSLY.

GENERAL:
-SEE SPECIFICATIONS AND DESIGN CALCULATIONS FOR DESIGN CRITERIA.
-SEISMIC LOADS ARE BASED ON 780 CMR, CHAPTER 16 FOR NEW BEDFORD, MA: Ss = 0.23g
-SEE SPECIFICATIONS FOR WELDING, TIMBER, METAL REQUIREMENTS.
-FABRICATED STEEL SHALL BE FURNISHED IN ACCORDANCE WITH THE GENERAL PROVISIONS. SHOP DRAWINGS SHALL SHOW IN DETAIL ALL SIZES, SHAPES, MATERIALS, FINISHES AND METHODS OF ATTACHING MISCELLANEOUS METAL ITEMS TO ONE ANOTHER, AND WORK OF OTHER TRADES.
-ALL CONNECTIONS, BOLTING LAYOUTS, WELDS, DETAILING AND FABRICATION SHALL BE DESIGNED BY THE FABRICATOR UNDER THE DIRECTION OF A LICENSED PROFESSIONAL ENGINEER IN ACCORDANCE WITH THE APPLICABLE PORTIONS OF THE CODES, AND ALL SUBMITTALS SHALL BE CERTIFIED AND SEALED BY A MASSACHUSETTS LICENSED PROFESSIONAL ENGINEER.
- ALL WELDING MATERIALS SHALL BE OF COMPATIBLE STRENGTH AND CORROSION RESISTANCE TO THE METALS THAT THEY ARE JOINING. UNSPECIFIED WELDS ARE TO BE FILLET WELDS, AND SHALL BE OF SUFFICIENT DIMENSION SO AS TO MEET THE SIZE/STRENGTH OF THE METAL PARTS THAT THEY ARE JOINING. WHERE DIFFERENT GRADES OF METALS ARE JOINED THE ELECTRODES SHALL MEET THE CRITERIA OF THE STRONGER OR MORE CORROSION RESISTANT METAL. ALL WELDING SHALL BE IN CONFORMANCE WITH AWS D.1.2010 STRUCTURAL CODE - STEEL.

DESIGN CRANE LOADS

DEMAG 66-6800

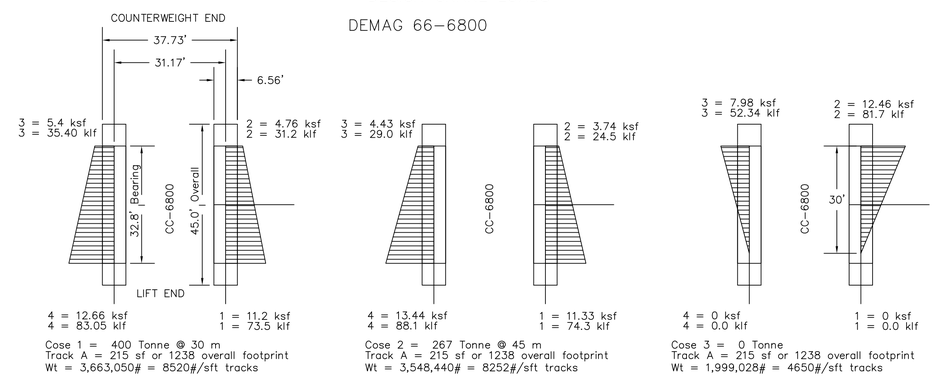

LIEBHERR LR-11350

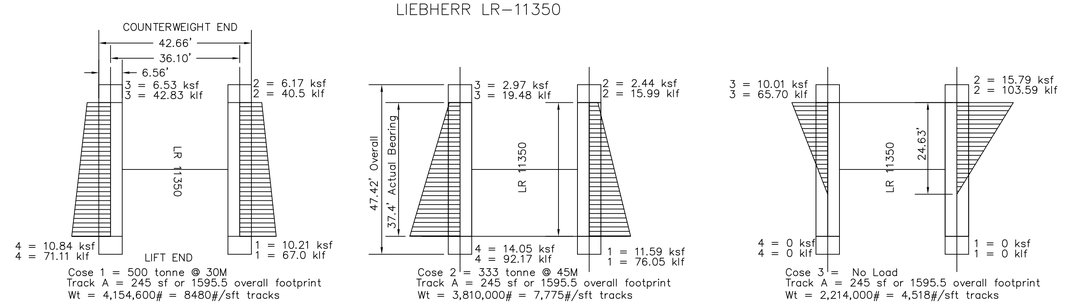

NOTE: TRACK A IS THE MORE HEAVILY LOADED TRACK

LOAD DIAGRAMS ARE INCLUDED FOR INFORMATIONAL PURPOSES ONLY AND AS A REFERENCE AS TO WHAT WAS USED FOR THE PROJECT DESIGN, OTHER SPECIFIC LOADING SHALL BE EVALUATED BY PROFESSIONAL THOROUGHLY FAMILIAR WITH THIS DESIGN; AND INTERPOLATING LOADING ALLOWANCES BASED ON THESE DIAGRAMS IS NOT ENCOURAGED.

COMMONWEALTH OF MASSACHUSETTS
JOHN A DeRUGERIS
CIVIL
NO. 32842
REGISTERED PROFESSIONAL ENGINEER
4-4-13

APEX

ROCKVILLE, MD
SOUTH WINDSOR, CT - BOSTON, MA - NEW BEDFORD, MA - HOLYOKE, MA

184 HIGH STREET, SUITE 502
BOSTON, MA 02210

58H CONNECTICUT AVENUE
SOUTH WINDSOR, CT

This drawings prepared by Apex for this project are instruments of Apex's service for use solely with respect to this project, and Apex shall be deemed the author of the Drawing and shall retain all common law, statutory and other reserved rights with respect thereto, including the copyright. The Documents shall not be used on other projects, for additions to this project or for completion of this project by others, except by agreement in writing and with appropriate compensation to Apex.

cleengineering
15 Creek Road | Marion, Massachusetts 02738
t: 508.748.0937 | www.cleengineering.com

It is a violation of law for any person unless he is acting under the direction of a licensed professional engineer to alter this document. This drawing was prepared at the scale indicated in the title block. Inaccuracies in the stated scale may be introduced when drawings are reproduced by any means. (Use the graphic scale bar to determine the actual scale of this drawing)

PROJECT
NEW BEDFORD MARINE COMMERCE TERMINAL

OWNER
MASSACHUSETTS CLEAN ENERGY COUNCIL
55 SUMMER STREET, 9TH FLOOR
BOSTON, MASSACHUSETTS

NO.	DATE	DESCRIPTION	BY
1	6/29/12	MISC. REVISIONS	SN/JD
2	1/3/13	CONSTR. NOTES	SN/JD
3	4/4/13	REV WATER-PROOFING NOTE	SN/JD

PROJECT NO.	10068.100
CADD FILE	SoTerminal_Final
DESIGNED BY	JDR - (CLE)
DRAWN BY	JDR - (CLE)
CHECKED BY	SEN / WR - (CLE)
DATE	12/23/11
DRAWING SCALE	AS NOTED

GRAPHIC SCALE
AS NOTED

SHEET TITLE
STRUCTURAL GENERAL NOTES

DRAWING NO.
S-0

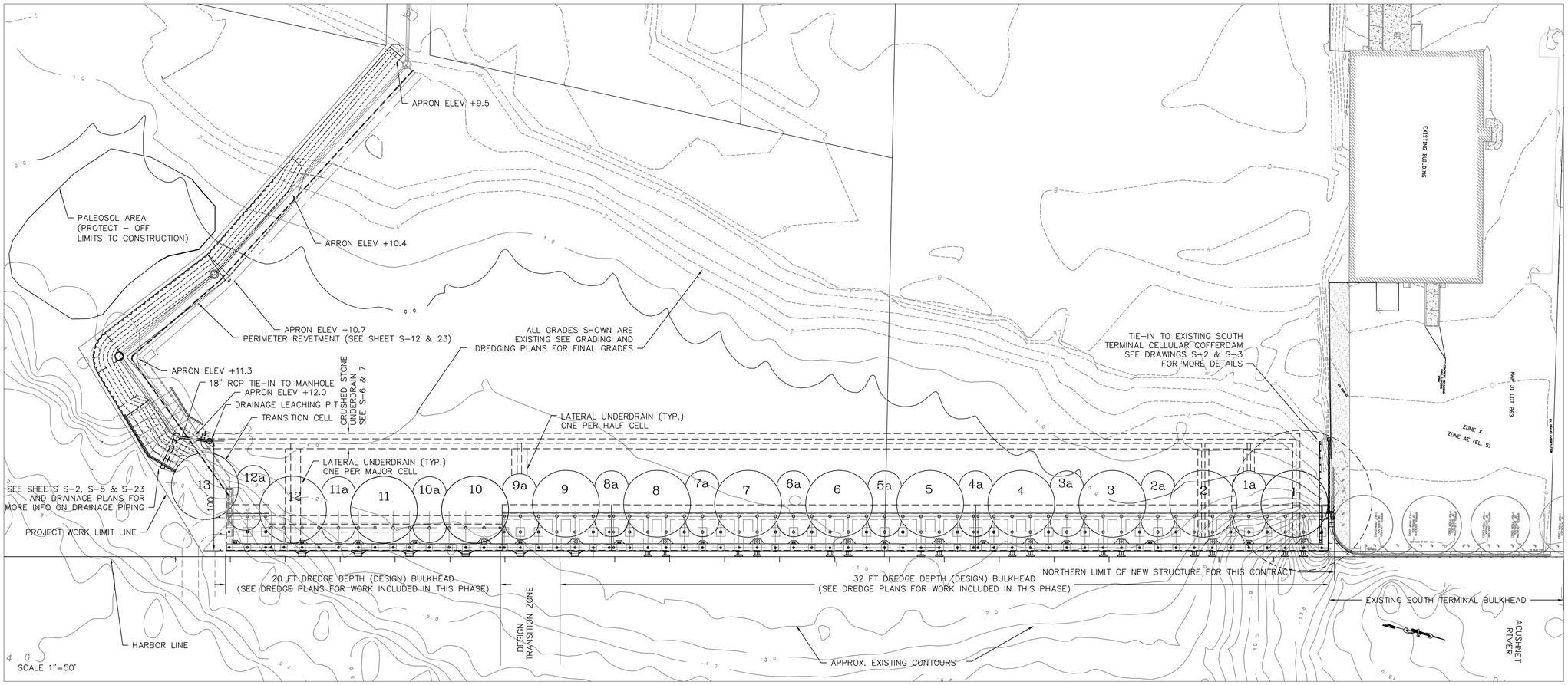

BULKHEAD OVERVIEW PLAN

NOTES:
1. ALL CONTOURS SHOWN ARE EXISTING GRADES, REFER TO DREDGING AND GRADING PLANS FOR FINAL GRADES AS WELL AS DREDGING, EXCAVATION AND FILLING REQUIREMENTS
2. REFER TO DRAINAGE & UTILITY PLANS FOR DETAILS OF SITE PIPING.
3. SEE SHEET S-0 FOR GENERAL NOTES
4. ALL CELLS ARE TO BE FIELD LOCATED BASED ON CENTER OF CELL LOCATIONS GIVEN IN THE TABLE ON THIS SHEET

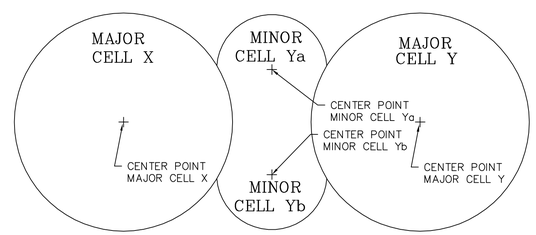

CELL CONTROL POINT DIAGRAM
SEE ARCELOR MITTAL MANUAL
"DESIGN & EXECUTION"
"AS-500 STRAIGHT WEB STEEL PILES"
FOR LAYOUT DETAILS USED IN THESE PLANS

COMMONWEALTH OF MASSACHUSETTS
JOHN A DeRUGERIS
CIVIL
NO. 32842
REGISTERED PROFESSIONAL ENGINEER
6-29-12

LIST OF CELL CENTER COORDINATES

Cell	EASTING	NORTHING	
1	816220.6924	2688505.4275	
1A*	816216.8089	2688461.6209	*Land
1B*	816245.2475	2688468.9425	*Water
2	816241.3639	2688425.1358	
2A	816237.4804	2688381.3292	
2B	816265.919	2688388.6508	
3	816262.0354	2688344.8441	
3A	816258.1519	2688301.0375	
3B	816286.5905	2688308.3591	
4	816282.707	2688264.5525	
4A	816278.8234	2688220.7458	
4B	816307.262	2688228.0674	
5	816303.3785	2688184.2608	
5A	816299.4949	2688140.4541	
5B	816327.9335	2688147.7757	
6	816324.05	2688103.9691	
6A	816320.1664	2688060.1624	
6B	816345.5217	2688066.6937	
7	816344.7215	2688023.6774	
7A	816340.8379	2687979.8707	
7B	816366.1941	2687986.3987	
8	816365.393	2687943.3857	
8A	816361.351	2687892.0804	
8B	816389.9481	2687906.9006	
9	816386.0645	2687863.0940	
9A	816385.0966	2687819.1261	
9B	816412.9866	2687828.3189	
10	816412.0187	2687784.3510	
10A	816408.1351	2687740.5444	
10B	816436.5738	2687747.8660	
11	816432.6902	2687704.0593	
11A	816428.8066	2687660.2527	
11B	816457.2453	2687667.5743	
12	816453.3617	2687623.7676	
12A	816438.2725	2687582.4588	
12B	816467.6371	2687582.1705	
13	816452.5478	2687540.8616	

APEX

ROCKVILLE, MD
SOUTH WINDSOR, CT - BOSTON, MA -
NEW BEDFORD, MA - HOLYOKE, MA

184 HIGH STREET, SUITE 502
BOSTON, MA 02210

58H CONNECTICUT AVENUE
SOUTH WINDSOR, CT

This drawings prepared by Apex for this project are instruments of Apex's service for use solely with respect to this project, and Apex shall be deemed the author of the Drawing and shall retain all common law, statutory and other reserved rights with respect thereto, including the copyright. The Documents shall not be used on other projects, for additions to this project or for completion of this project by others, except by agreement in writing and with appropriate compensation to Apex. .

cleengineering
15 Creek Road | Marion, Massachusetts 02738
t: 508.748.0937 | www.cleengineering.com

It is a violation of law for any person unless he is acting under the direction of a licensed professional engineer to alter this document. This drawing was prepared at the scale indicated in the title block. Inaccuracies in the stated scale may be introduced when drawings are reproduced by any means. (Use the graphic scale bar to determine the actual scale of this drawing)

PROJECT
NEW BEDFORD
MARINE COMMERCE
TERMINAL

OWNER
MASSACHUSETTS CLEAN ENERGY COUNCIL
55 SUMMER STREET, 9TH FLOOR
BOSTON, MASSACHUSETTS

NO.	DATE	DESCRIPTION	BY
1	6/29/12	MISC. REVISIONS	SN/JD

PROJECT NO.	10068.100
CADD FILE	SoTerminal_Final
DESIGNED BY	JDR – (CLE)
DRAWN BY	JDR – (CLE)
CHECKED BY	SEN / WR – (CLE)
DATE	12/23/11
DRAWING SCALE	AS NOTED

GRAPHIC SCALE
AS NOTED

SHEET TITLE
BULKHEAD LAYOUT
& TIE-IN

DRAWING NO.
S-1

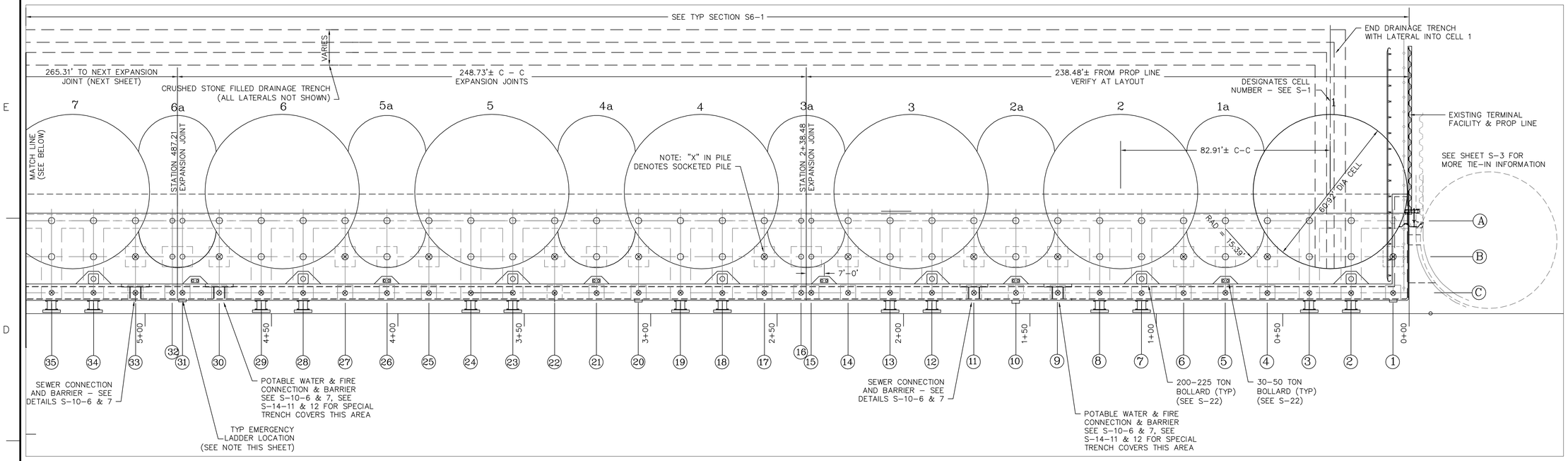

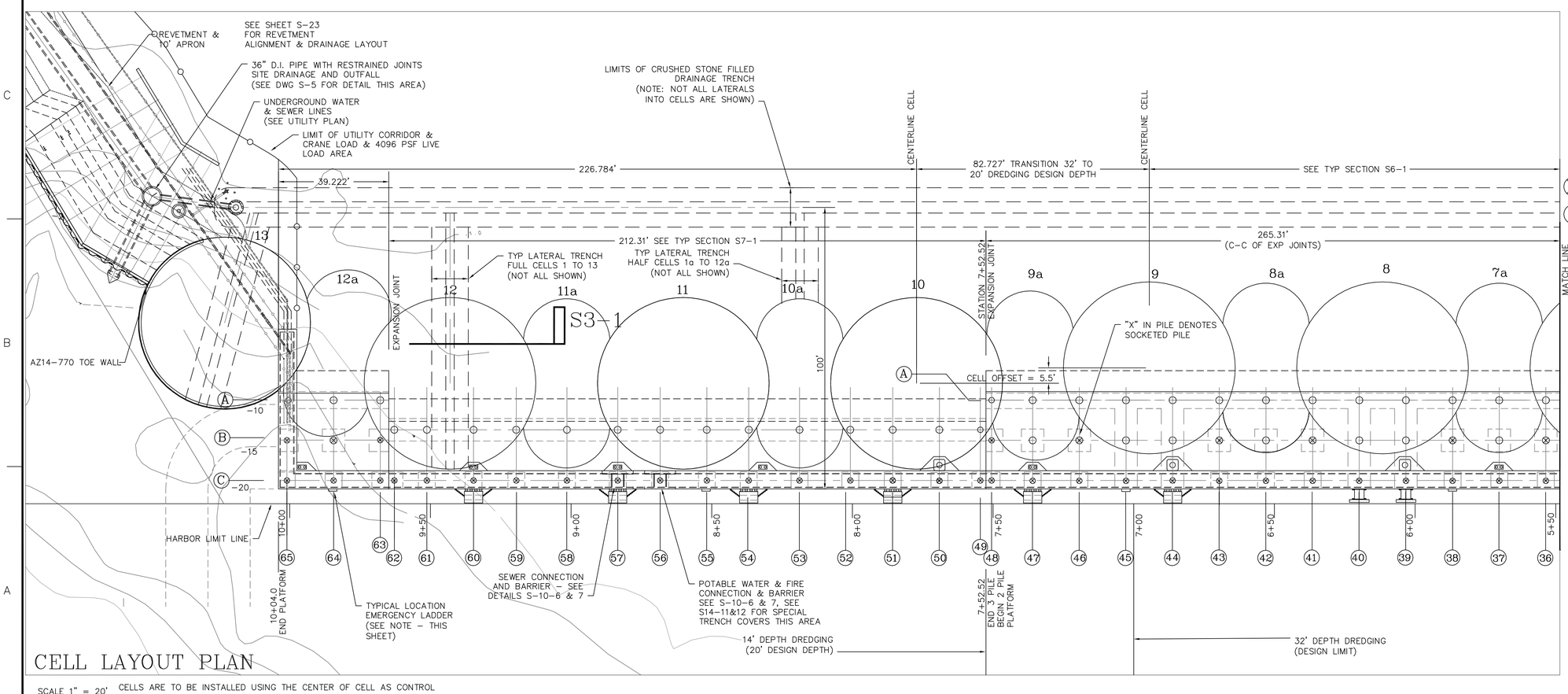

CELL LAYOUT PLAN

SCALE 1" = 20'

CELLS ARE TO BE INSTALLED USING THE CENTER OF CELL AS CONTROL
SEE SHEET S-1 FOR COORDINATES OF CELL CENTERS

FOR MORE DIMENSIONAL LAYOUT INFORMATION SEE SHEETS S-3 & S-4

NOTE: EMERGENCY LADDERS ARE LOCATED AT PILE LINES: 1, 10, 20 31, 38, 45, 55 & 64

"SC-1150" FENDERS ARE LOCATED AT PILE LINES: 2, 3, 7, 8, 12, 13, 18, 19, 23, 24, 28, 29, 34, 35, 39, & 40

"O-1200 X 2000" FENDERS ARE LOCATED AT PILE LINES: 44, 47, 51, 54, 57, & 60

⊗ PILES TO BE SOCKETED & FILLED W/ 4000 PSI CONCRETE

○ DRIVEN PILES WITH CUTTING SHOES

COMMONWEALTH OF MASSACHUSETTS
JOHN A. DERUGERIS
CIVIL
NO. 32842
REGISTERED PROFESSIONAL ENGINEER
6-29-12

APEX

ROCKVILLE, MD
SOUTH WINDSOR, CT - BOSTON, MA - NEW BEDFORD, MA - HOLYOKE, MA

184 HIGH STREET, SUITE 502
BOSTON, MA 02210

58H CONNECTICUT AVENUE
SOUTH WINDSOR, CT

This drawings prepared by Apex for this project are instruments of Apex's service for use solely with respect to this project, and Apex shall be deemed the author of the Drawing and shall retain all common law, statutory and other reserved rights with respect thereto, including the copyright. The Documents shall not be used on other projects, for additions to this project or for completion of this project by others, except by agreement in writing and with appropriate compensation to Apex.

cleengineering
15 Creek Road | Marion, Massachusetts 02738
t: 508.748.0937 | www.cleengineering.com

It is a violation of law for any person unless he is acting under the direction of a licensed professional engineer to alter this document. This drawing was prepared at the scale indicated in the title block. Inaccuracies in the stated scale may be introduced when drawings are reproduced by any means. (Use the graphic scale bar to determine the actual scale of this drawing)

PROJECT
NEW BEDFORD MARINE COMMERCE TERMINAL

OWNER
MASSACHUSETTS CLEAN ENERGY COUNCIL
55 SUMMER STREET, 9TH FLOOR
BOSTON, MASSACHUSETTS

NO.	DATE	DESCRIPTION	BY
1	6/29/12	MISC. REVISIONS	SN/JD

PROJECT NO.	10068.100
CADD FILE	SoTerminal_Final
DESIGNED BY	JDR - (CLE)
DRAWN BY	JDR - (CLE)
CHECKED BY	SEN / WR - (CLE)
DATE	12/23/11
DRAWING SCALE	AS NOTED

GRAPHIC SCALE
AS NOTED

SHEET TITLE
CELL PLAN LAYOUT

DRAWING NO.
S-2

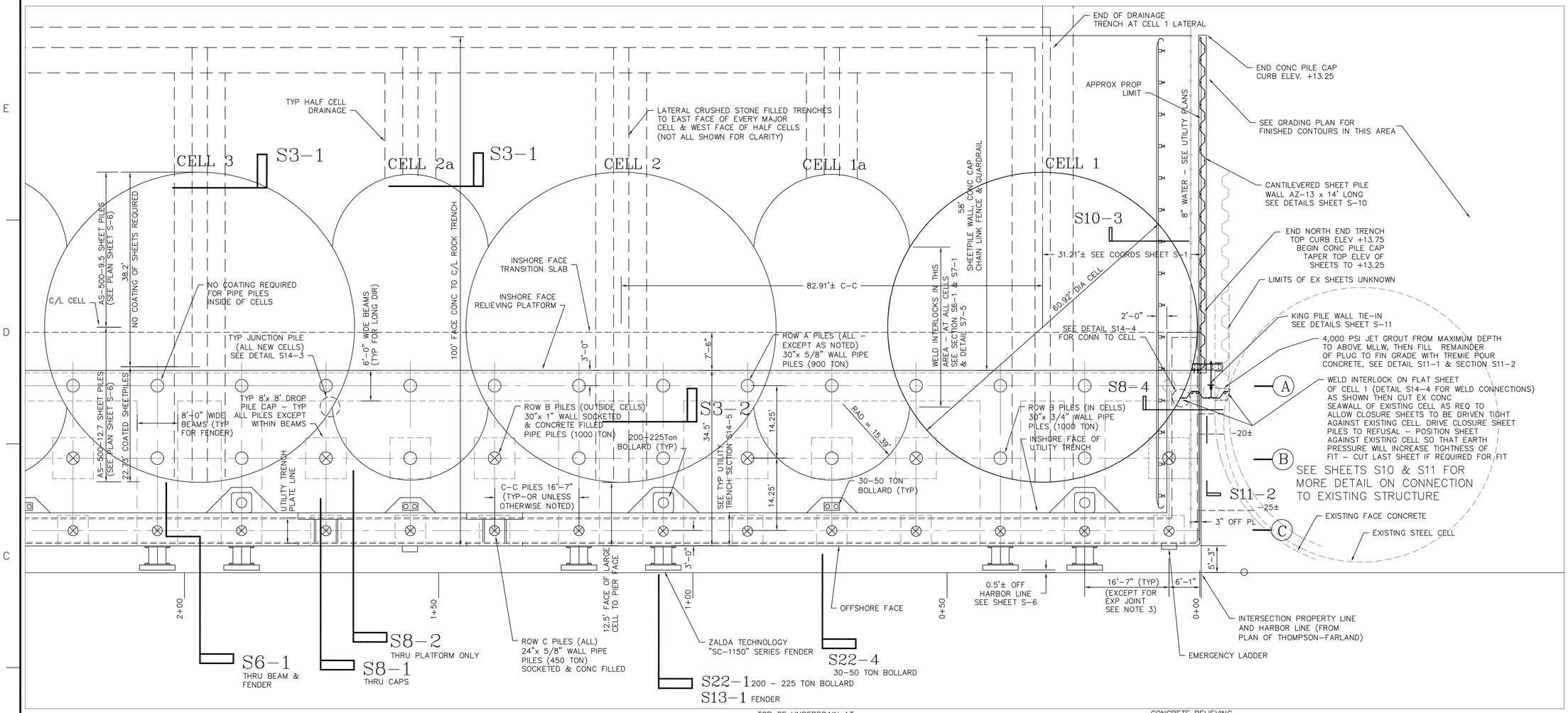

PARTIAL PLAN VIEW
STEEL CELL COFFERDAM

SCALE 1" = 10'-0"

CELLS ARE TO BE INSTALLED USING THE CENTER OF CELL AS CONTROL
SEE SHEET S-1 FOR COORDINATES OF CELL CENTERS

NOTES:
1. REFERENCE: 'EXISTING CONDITIONS PLAN - SOUTH TERMINAL' PREPARED BY THOMPSON FARLAND, NEW BEFORD, MA; DATED 03/29/11; 4-SHEETS
2. SEE CONCRETE PLANS FOR MORE DETAIL ON RELIEVING PLATFORM
3. TYPICAL PILE SPACING IN NORTH-SOUTH DIRECTION FOR CELLS 1 TO 9 IS 16'-7" EXCEPT AT DOUBLE PILE EXPANSION & CONSTRUCTION BAYS AT PILE LINES DESIGNATED ON S-2 & S-4. THE PILE SPACES ABUTTING EXPANSION JOINTS ARE TO BE 14'-7" UNLESS NOTED OTHERWISE (EXCLUSIVE AT STATION 9+64.84).

⊗ PILES TO BE SOCKETED & FILLED W/ 4000 PSI CONCRETE

○ DRIVEN PILES WITH CUTTING SHOES

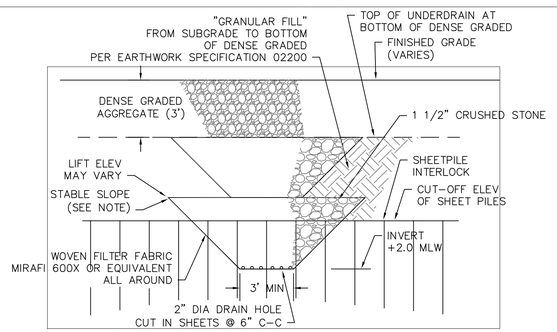

SECT"S3-1" DRAINAGE LATERAL

SCALE 1/4"=1'-0" SECTION AT LANDWARD EDGE OF CELL

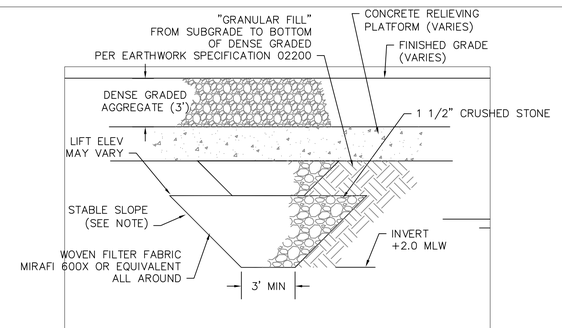

SECT "S3-2" DRAINAGE LATERAL

SCALE 1/4"=1'-0" SECTION UNDER PLATFORM (CONDITIONS VARY)

DRAINAGE NOTES:
1. CONTRACTOR MAY INSTALL DRAINAGE ROCK IN UP TO 3 LIFTS TO CONSERVE ROCK MATERIAL VOLUME.
2. SPACE HOLES IN SHEETS SO AS TO AVOID INTERLOCKS (AS SHOWN)

COMMONWEALTH OF MASSACHUSETTS
JOHN A. DVELIS/GERIS
CIVIL
NO. 32842
REGISTERED PROFESSIONAL ENGINEER
6-29-12

APEX

ROCKVILLE, MD
SOUTH WINDSOR, CT - BOSTON, MA - NEW BEDFORD, MA - HOLYOKE, MA

184 HIGH STREET, SUITE 502
BOSTON, MA 02210

58H CONNECTICUT AVENUE
SOUTH WINDSOR, CT

This drawings prepared by Apex for this project are instruments of Apex's service for use solely with respect to this project, and Apex shall be deemed the author of the Drawing and shall retain all common law, statutory and other reserved rights with respect thereto, including the copyright. The Documents shall not be used on other projects, for additions to this project or for completion of this project by others, except by agreement in writing and with appropriate compensation to Apex. .

cleengineering
15 Creek Road | Marion, Massachusetts 02738
t: 508.748.0937 | www.cleengineering.com

It is a violation of law for any person unless he is acting under the direction of a licensed professional engineer to alter this document. This drawing was prepared at the scale indicated in the title block. Inaccuracies in the stated scale may be introduced when drawings are reproduced by any means. (Use the graphic scale bar to determine the actual scale of this drawing)

PROJECT
NEW BEDFORD MARINE COMMERCE TERMINAL

OWNER
MASSACHUSETTS CLEAN ENERGY COUNCIL
55 SUMMER STREET, 9TH FLOOR
BOSTON, MASSACHUSETTS

NO.	DATE	DESCRIPTION	BY
1	6/29/12	MISC. REVISIONS	SN/JD

PROJECT NO.	10068.100
CADD FILE	SoTerminal_Final
DESIGNED BY	JDR - (CLE)
DRAWN BY	JDR - (CLE)
CHECKED BY	SEN / WR - (CLE)
DATE	12/23/11
DRAWING SCALE	AS NOTED

GRAPHIC SCALE
AS NOTED

SHEET TITLE
COFFERDAM LAYOUT 32' DREDGE AREA (PLAN VIEW)

DRAWING NO.
S-3

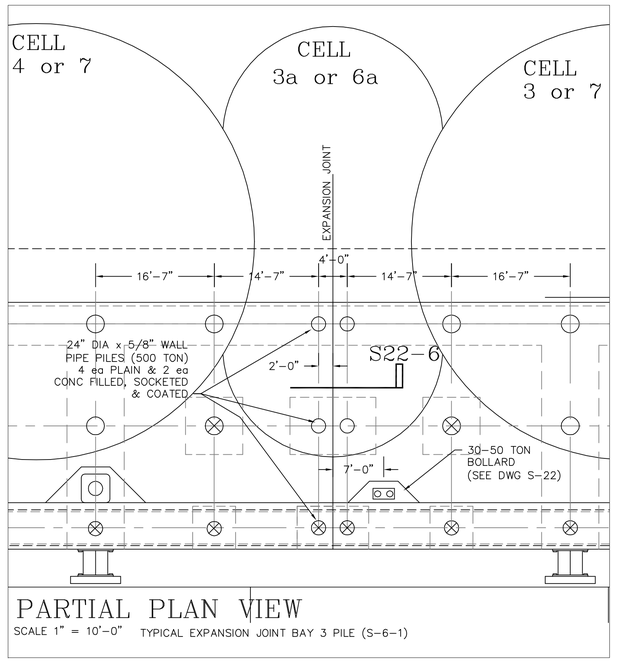

PARTIAL PLAN VIEW

SCALE 1" = 10'-0" TYPICAL EXPANSION JOINT BAY 3 PILE (S-6-1)

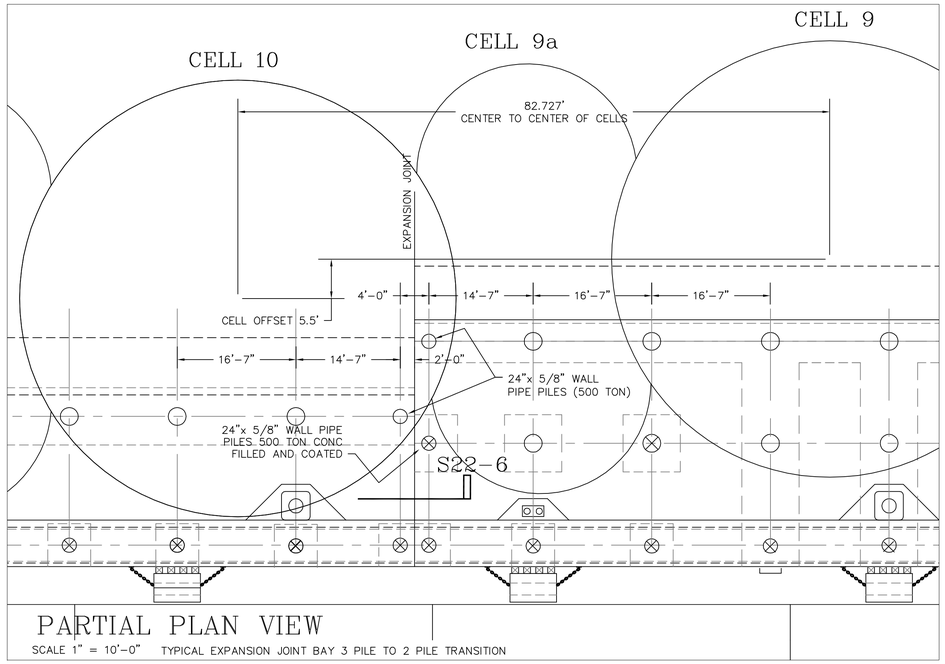

PARTIAL PLAN VIEW

SCALE 1" = 10'-0" TYPICAL EXPANSION JOINT BAY 3 PILE TO 2 PILE TRANSITION

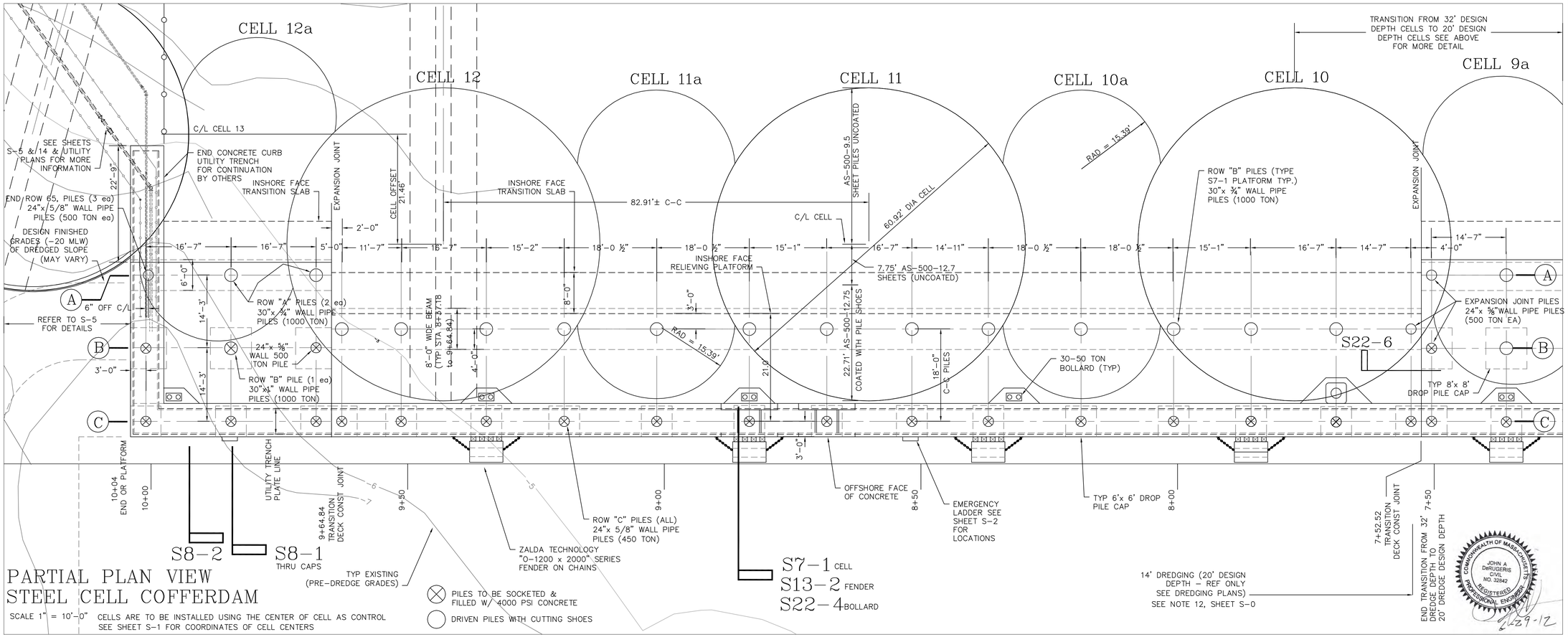

PARTIAL PLAN VIEW
STEEL CELL COFFERDAM

SCALE 1" = 10'-0" CELLS ARE TO BE INSTALLED USING THE CENTER OF CELL AS CONTROL SEE SHEET S-1 FOR COORDINATES OF CELL CENTERS

APEX

ROCKVILLE, MD
SOUTH WINDSOR, CT - BOSTON, MA - NEW BEDFORD, MA - HOLYOKE, MA

184 HIGH STREET, SUITE 502
BOSTON, MA 02210

58H CONNECTICUT AVENUE
SOUTH WINDSOR, CT

This drawings prepared by Apex for this project are instruments of Apex's service for use solely with respect to this project, and Apex shall be deemed the author of the Drawing and shall retain all common law, statutory and other reserved rights with respect thereto, including the copyright. The Documents shall not be used on other projects, for additions to this project or for completion of this project by others, except by agreement in writing and with appropriate compensation to Apex. .

cleengineering
15 Creek Road | Marion, Massachusetts 02738
t: 508.748.0937 | www.cleengineering.com

It is a violation of law for any person unless he is acting under the direction of a licensed professional engineer to alter this document. This drawing was prepared at the scale indicated in the title block. Inaccuracies in the stated scale may be introduced when drawings are reproduced by any means. (Use the graphic scale bar to determine the actual scale of this drawing)

PROJECT

NEW BEDFORD MARINE COMMERCE TERMINAL

OWNER

MASSACHUSETTS CLEAN ENERGY COUNCIL
55 SUMMER STREET, 9TH FLOOR
BOSTON, MASSACHUSETTS

NO.	DATE	DESCRIPTION	BY
1	6/29/12	MISC. REVISIONS	SN/JD

PROJECT NO.	10068.100
CADD FILE	SoTerminal_Final
DESIGNED BY	JDR - (CLE)
DRAWN BY	JDR - (CLE)
CHECKED BY	SEN / WR - (CLE)
DATE	12/23/11
DRAWING SCALE	AS NOTED

GRAPHIC SCALE

AS NOTED

SHEET TITLE

COFFERDAM LAYOUT (PLAN VIEW)

DRAWING NO.

S-4

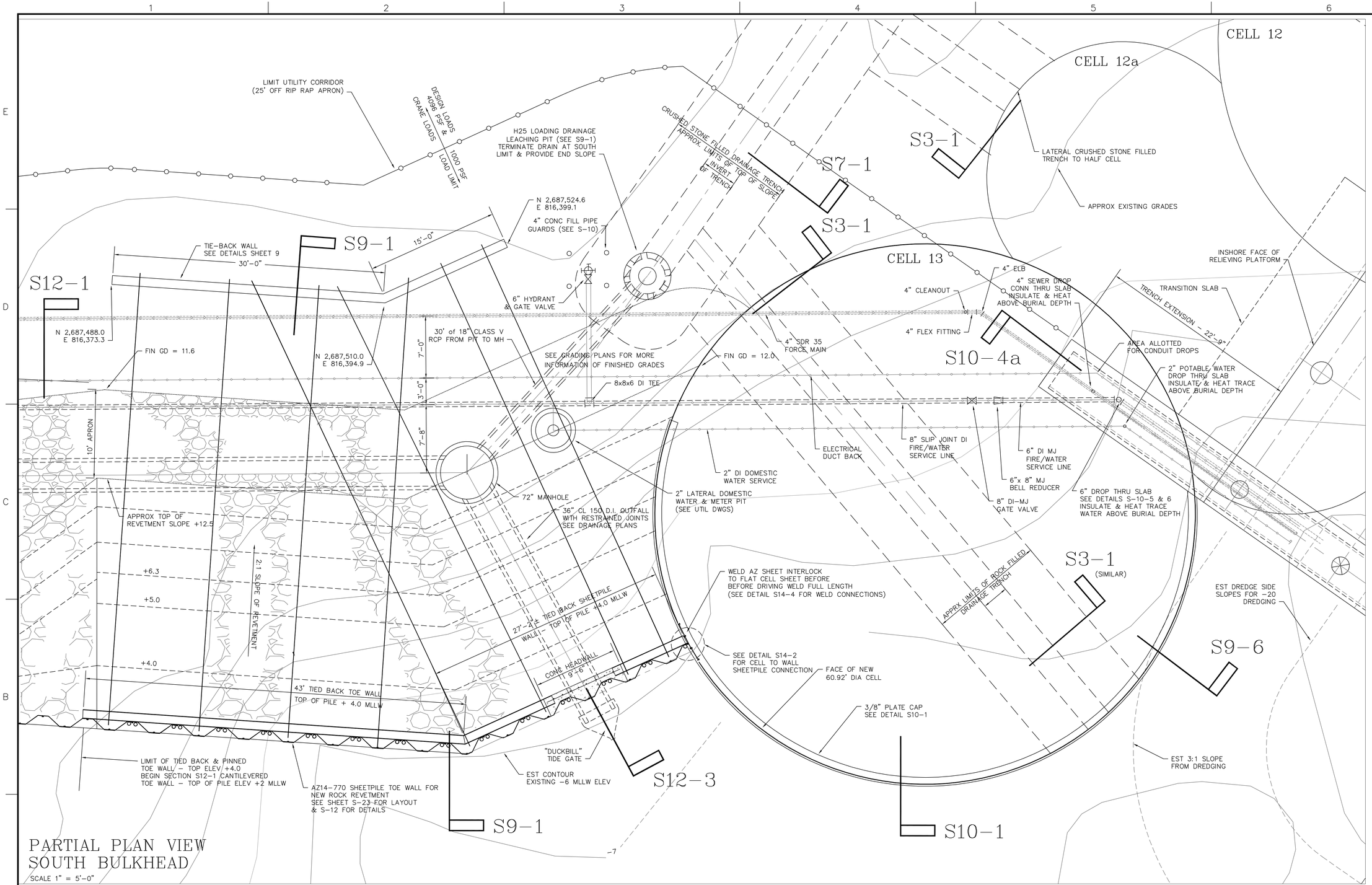

PARTIAL PLAN VIEW SOUTH BULKHEAD

SCALE 1" = 5'-0"

SEE EXCAVATION SPECIFICATIONS FOR MORE INFORMATION ON UNSUITABLE SOIL REMOVAL & BASE PREPARATION FOR REVETMENT

COMMONWEALTH OF MASSACHUSETTS
JOHN A. DARLUGERIS
CIVIL
NO. 32842
REGISTERED PROFESSIONAL ENGINEER
6-29-12

APEX

ROCKVILLE, MD
SOUTH WINDSOR, CT - BOSTON, MA - NEW BEDFORD, MA - HOLYOKE, MA

184 HIGH STREET, SUITE 502
BOSTON, MA 02210

58H CONNECTICUT AVENUE
SOUTH WINDSOR, CT

This drawings prepared by Apex for this project are instruments of Apex's service for use solely with respect to this project, and Apex shall be deemed the author of the Drawing and shall retain all common law, statutory and other reserved rights with respect thereto, including the copyright. The Documents shall not be used on other projects, for additions to this project or for completion of this project by others, except by agreement in writing and with appropriate compensation to Apex. .

cleengineering
15 Creek Road | Marion, Massachusetts 02738
t: 508.748.0937 | www.cleengineering.com

It is a violation of law for any person unless he is acting under the direction of a licensed professional engineer to alter this document. This drawing was prepared at the scale indicated in the title block. Inaccuracies in the stated scale may be introduced when drawings are reproduced by any means. (Use the graphic scale bar to determine the actual scale of this drawing)

PROJECT
NEW BEDFORD MARINE COMMERCE TERMINAL

OWNER
MASSACHUSETTS CLEAN ENERGY COUNCIL
55 SUMMER STREET, 9TH FLOOR
BOSTON, MASSACHUSETTS

NO.	DATE	DESCRIPTION	BY
1	6/29/12	MISC. REVISIONS	SN/JD

PROJECT NO.	10068.100
CADD FILE	SoTerminal_Final
DESIGNED BY	JDR - (CLE)
DRAWN BY	JDR - (CLE)
CHECKED BY	SEN / WR - (CLE)
DATE	12/23/11
DRAWING SCALE	AS NOTED

GRAPHIC SCALE
AS NOTED

SHEET TITLE
PARTIAL VIEW SOUTH BULKHEAD

DRAWING NO.
S-5

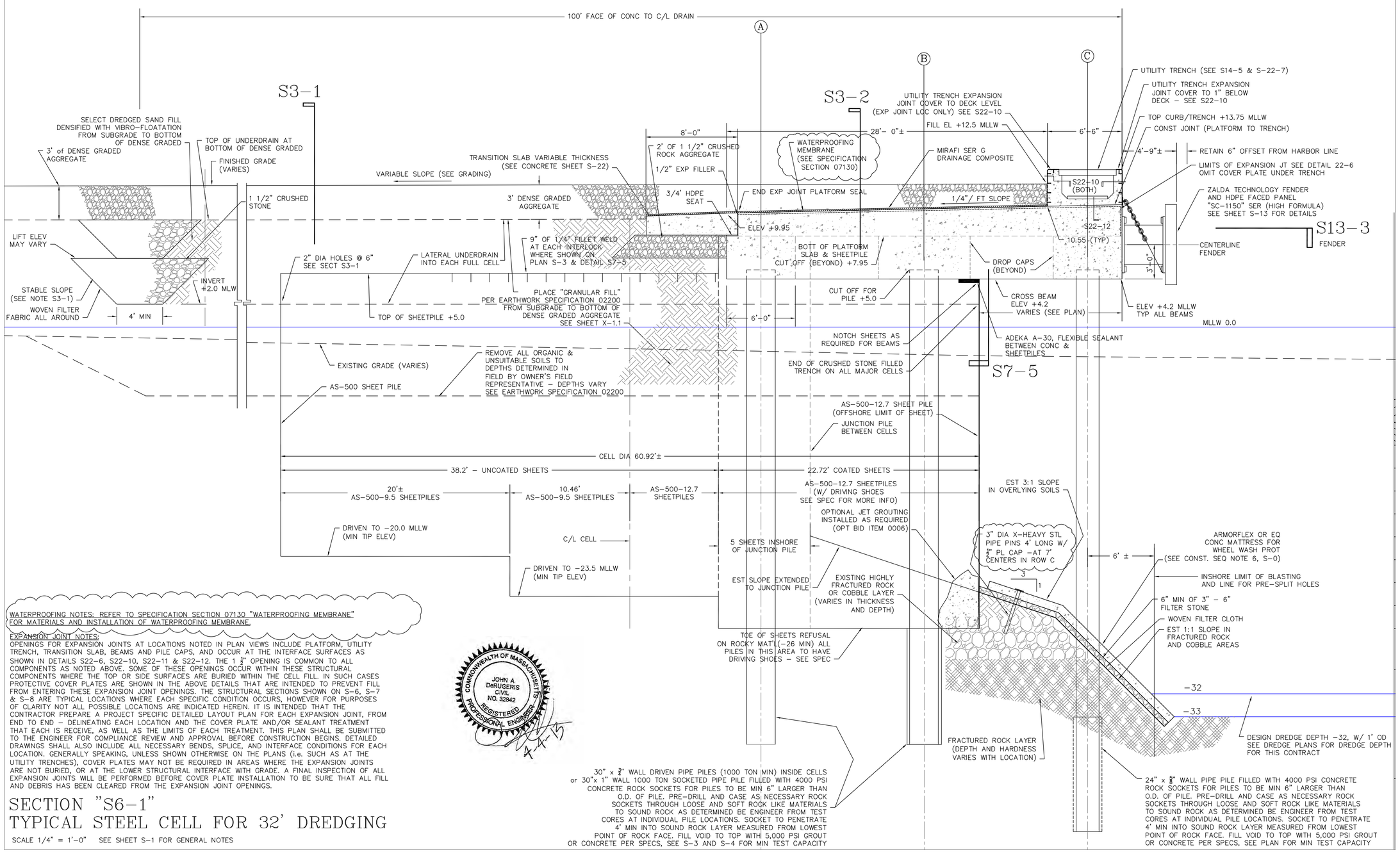

WATERPROOFING NOTES: REFER TO SPECIFICATION SECTION 07130 "WATERPROOFING MEMBRANE" FOR MATERIALS AND INSTALLATION OF WATERPROOFING MEMBRANE.

EXPANSION JOINT NOTES:
OPENINGS FOR EXPANSION JOINTS AT LOCATIONS NOTED IN PLAN VIEWS INCLUDE PLATFORM, UTILITY TRENCH, TRANSITION SLAB, BEAMS AND PILE CAPS, AND OCCUR AT THE INTERFACE SURFACES AS SHOWN IN DETAILS S22-6, S22-10, S22-11 & S22-12. THE 1 1/2" OPENING IS COMMON TO ALL COMPONENTS AS NOTED ABOVE. SOME OF THESE OPENINGS OCCUR WITHIN THESE STRUCTURAL COMPONENTS WHERE THE TOP OR SIDE SURFACES ARE BURIED WITHIN THE CELL FILL. IN SUCH CASES PROTECTIVE COVER PLATES ARE SHOWN IN THE ABOVE DETAILS THAT ARE INTENDED TO PREVENT FILL FROM ENTERING THESE EXPANSION JOINT OPENINGS. THE STRUCTURAL SECTIONS SHOWN ON S-6, S-7 & S-8 ARE TYPICAL LOCATIONS WHERE EACH SPECIFIC CONDITION OCCURS, HOWEVER FOR PURPOSES OF CLARITY NOT ALL POSSIBLE LOCATIONS ARE INDICATED HEREIN. IT IS INTENDED THAT THE CONTRACTOR PREPARE A PROJECT SPECIFIC DETAILED LAYOUT PLAN FOR EACH EXPANSION JOINT, FROM END TO END - DELINEATING EACH LOCATION AND THE COVER PLATE AND/OR SEALANT TREATMENT THAT EACH IS RECEIVE, AS WELL AS THE LIMITS OF EACH TREATMENT. THIS PLAN SHALL BE SUBMITTED TO THE ENGINEER FOR COMPLIANCE REVIEW AND APPROVAL BEFORE CONSTRUCTION BEGINS. DETAILED DRAWINGS SHALL ALSO INCLUDE ALL NECESSARY BENDS, SPLICE, AND INTERFACE CONDITIONS FOR EACH LOCATION. GENERALLY SPEAKING, UNLESS SHOWN OTHERWISE ON THE PLANS (i.e. SUCH AS AT THE UTILITY TRENCHES), COVER PLATES MAY NOT BE REQUIRED IN AREAS WHERE THE EXPANSION JOINTS ARE NOT BURIED, OR AT THE LOWER STRUCTURAL INTERFACE WITH GRADE. A FINAL INSPECTION OF ALL EXPANSION JOINTS WILL BE PERFORMED BEFORE COVER PLATE INSTALLATION TO BE SURE THAT ALL FILL AND DEBRIS HAS BEEN CLEARED FROM THE EXPANSION JOINT OPENINGS.

SECTION "S6-1"
TYPICAL STEEL CELL FOR 32' DREDGING

SCALE 1/4" = 1'-0" SEE SHEET S-1 FOR GENERAL NOTES

APEX

ROCKVILLE, MD
SOUTH WINDSOR, CT - BOSTON, MA - NEW BEDFORD, MA - HOLYOKE, MA

184 HIGH STREET, SUITE 502
BOSTON, MA 02210

58H CONNECTICUT AVENUE
SOUTH WINDSOR, CT

This drawings prepared by Apex for this project are instruments of Apex's service for use solely with respect to this project, and Apex shall be deemed the author of the Drawing and shall retain all common law, statutory and other reserved rights with respect thereto, including the copyright. The Documents shall not be used on other projects, for additions to this project or for completion of this project by others, except by agreement in writing and with appropriate compensation to Apex.

cleengineering
15 Creek Road | Marion, Massachusetts 02738
t: 508.748.0937 | www.cleengineering.com

It is a violation of law for any person unless he is acting under the direction of a licensed professional engineer to alter this document. This drawing was prepared at the scale indicated in the title block. Inaccuracies in the stated scale may be introduced when drawings are reproduced by any means. (Use the graphic scale bar to determine the actual scale of this drawing)

PROJECT
NEW BEDFORD MARINE COMMERCE TERMINAL

OWNER
MASSACHUSETTS CLEAN ENERGY COUNCIL
55 SUMMER STREET, 9TH FLOOR
BOSTON, MASSACHUSETTS

NO.	DATE	DESCRIPTION	BY
1	6/29/12	MISC. REVISIONS	SN/JD
2	4/4/13	REVISE WATER-PROOFING NOTE	SN/JD

PROJECT NO.	10068.100
CADD FILE	SoTerminal_Final
DESIGNED BY	JDR - (CLE)
DRAWN BY	JDR - (CLE)
CHECKED BY	SEN / WR - (CLE)
DATE	12/23/11
DRAWING SCALE	AS NOTED

GRAPHIC SCALE
AS NOTED

SHEET TITLE
TYPICAL CELL
32' DREDGING AREA

DRAWING NO.
S-6

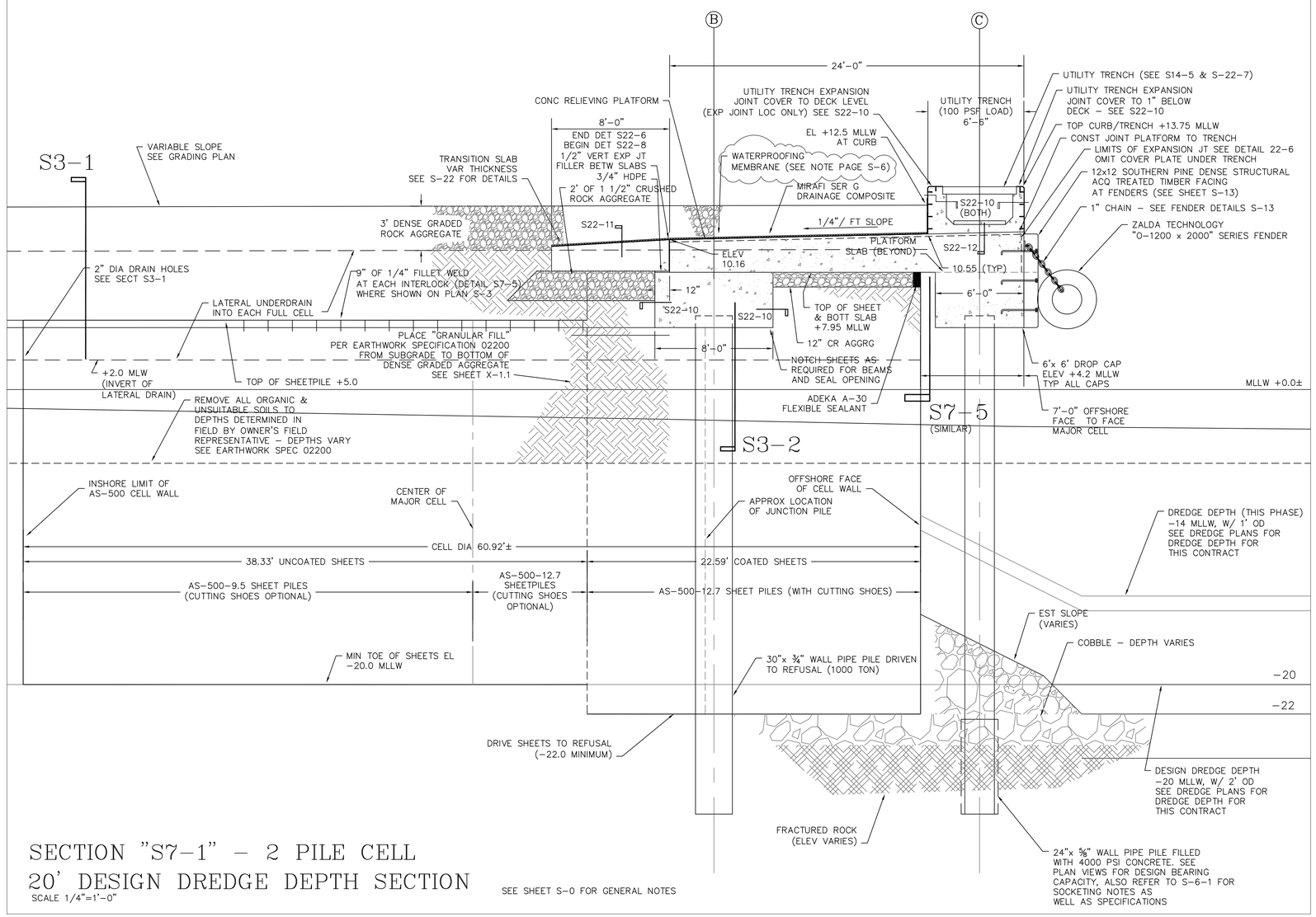

SECTION "S7-1" - 2 PILE CELL
20' DESIGN DREDGE DEPTH SECTION
SCALE 1/4"=1'-0"

SEE SHEET S-0 FOR GENERAL NOTES

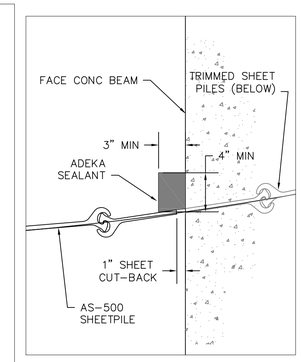

DETAIL S7-2
SEAL DETAIL AT SIDE OF BEAM
SCALE 1 1/2" = 1'-0"

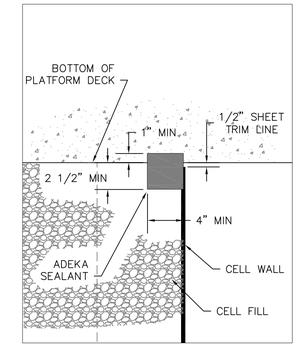

DETAIL S7-3
SEAL DETAIL AT BOTTOM OF DECK
SCALE 1 1/2" = 1'-0"

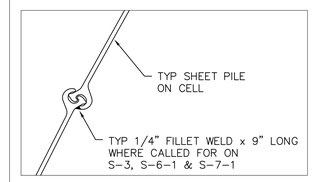

DETAIL S7-5
WELD AT INTERLOCK (WHERE CALLED FOR)
SCALE 1 1/2" = 1'-0"

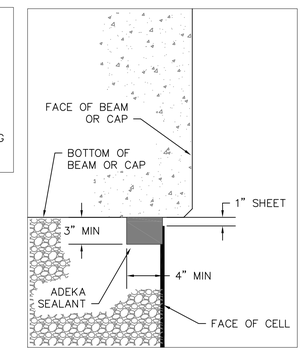

DETAIL S7-4
SEAL DETAIL AT BOTTOM OF CAP OR BEAM
SCALE 1 1/2" = 1'-0"

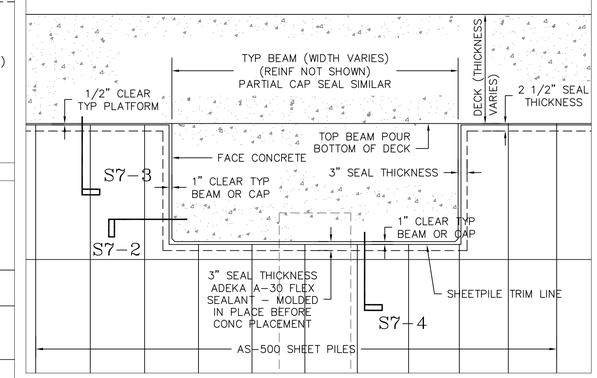

SECTION S7-5 TYPICAL SHEETPILE TO CONCRETE SEALING DETAIL
SCALE 1/2" = 1'-0"

APEX

ROCKVILLE, MD
SOUTH WINDSOR, CT - BOSTON, MA - NEW BEDFORD, MA - HOLYOKE, MA

184 HIGH STREET, SUITE 502
BOSTON, MA 02210

58H CONNECTICUT AVENUE
SOUTH WINDSOR, CT

This drawings prepared by Apex for this project are instruments of Apex's service for use solely with respect to this project, and Apex shall be deemed the author of the Drawing and shall retain all common law, statutory and other reserved rights with respect thereto, including the copyright. The Documents shall not be used on other projects, for additions to this project or for completion of this project by others, except by agreement in writing and with appropriate compensation to Apex. .

cleengineering
15 Creek Road | Marion, Massachusetts 02738
t: 508.748.0937 | www.cleengineering.com

It is a violation of law for any person unless he is acting under the direction of a licensed professional engineer to alter this document. This drawing was prepared at the scale indicated in the title block. Inaccuracies in the stated scale may be introduced when drawings are reproduced by any means. (Use the graphic scale bar to determine the actual scale of this drawing)

PROJECT
NEW BEDFORD MARINE COMMERCE TERMINAL

OWNER
MASSACHUSETTS CLEAN ENERGY COUNCIL
55 SUMMER STREET, 9TH FLOOR
BOSTON, MASSACHUSETTS

NO.	DATE	DESCRIPTION	BY
1	6/29/12	MISC. REVISIONS	SN/JD
2	1/18/13	ADD WATERPROOFING NOTES	JD

PROJECT NO.	10068.100
CADD FILE	SoTerminal_Final
DESIGNED BY	JDR - (CLE)
DRAWN BY	JDR - (CLE)
CHECKED BY	SEN / WR - (CLE)
DATE	12/23/11
DRAWING SCALE	AS NOTED

GRAPHIC SCALE
AS NOTED

SHEET TITLE
2-PILE CELL
20' DESIGN
DREDGING AREA

DRAWING NO.
S-7

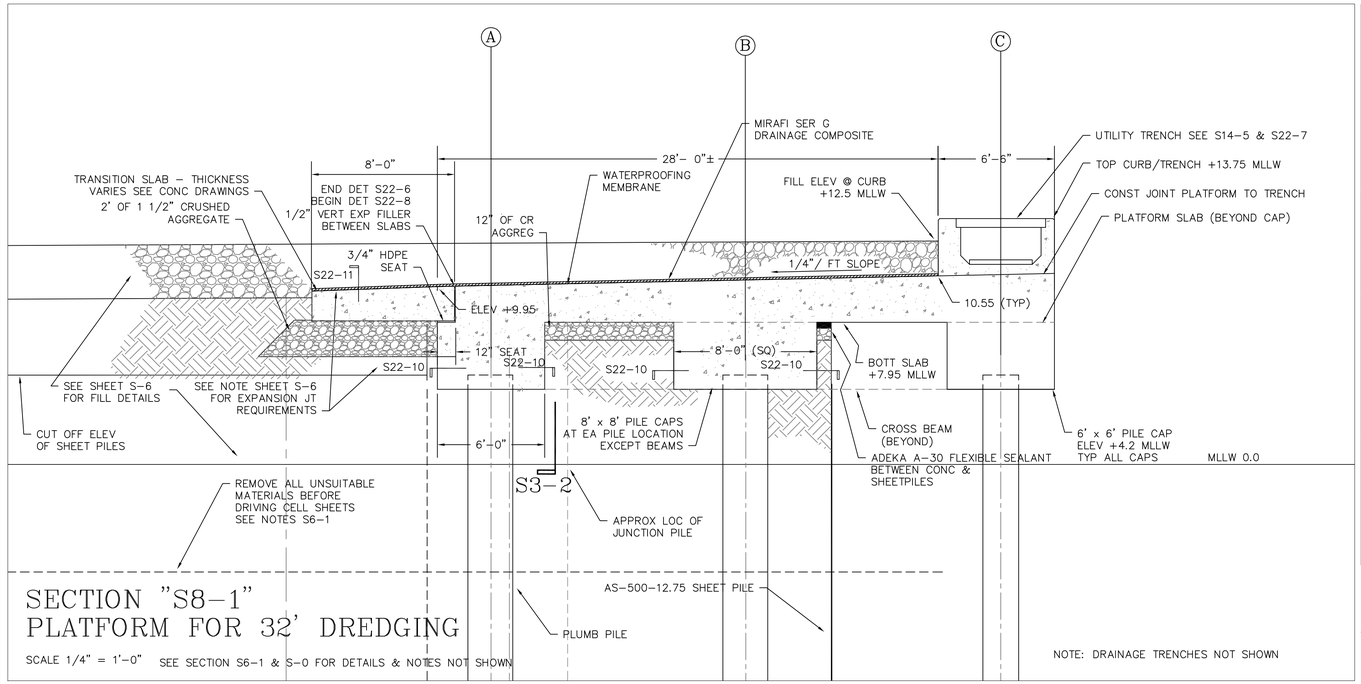

SECTION "S8-1"
PLATFORM FOR 32' DREDGING

SCALE 1/4" = 1'-0" SEE SECTION S6-1 & S-0 FOR DETAILS & NOTES NOT SHOWN

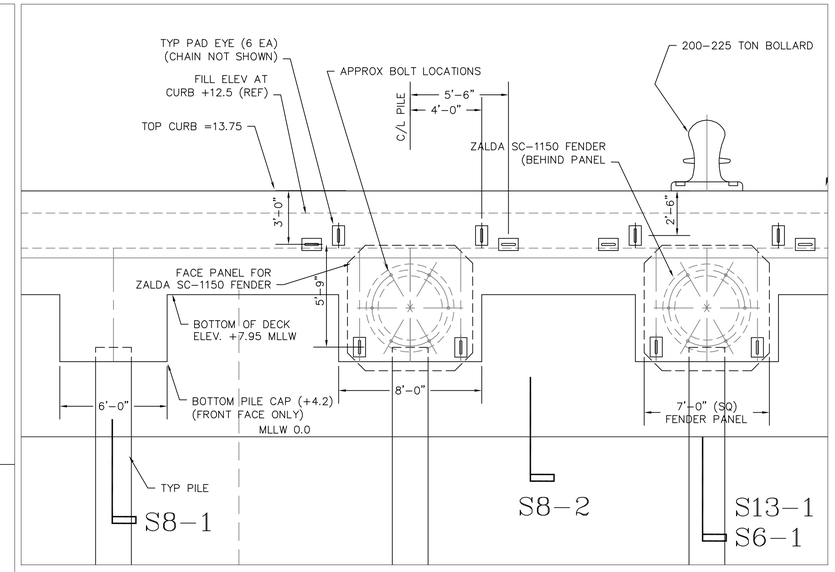

ELEVATION S8-3
FRONT FACE OF PLATFORM

SCALE 1/4" = 1'-0"

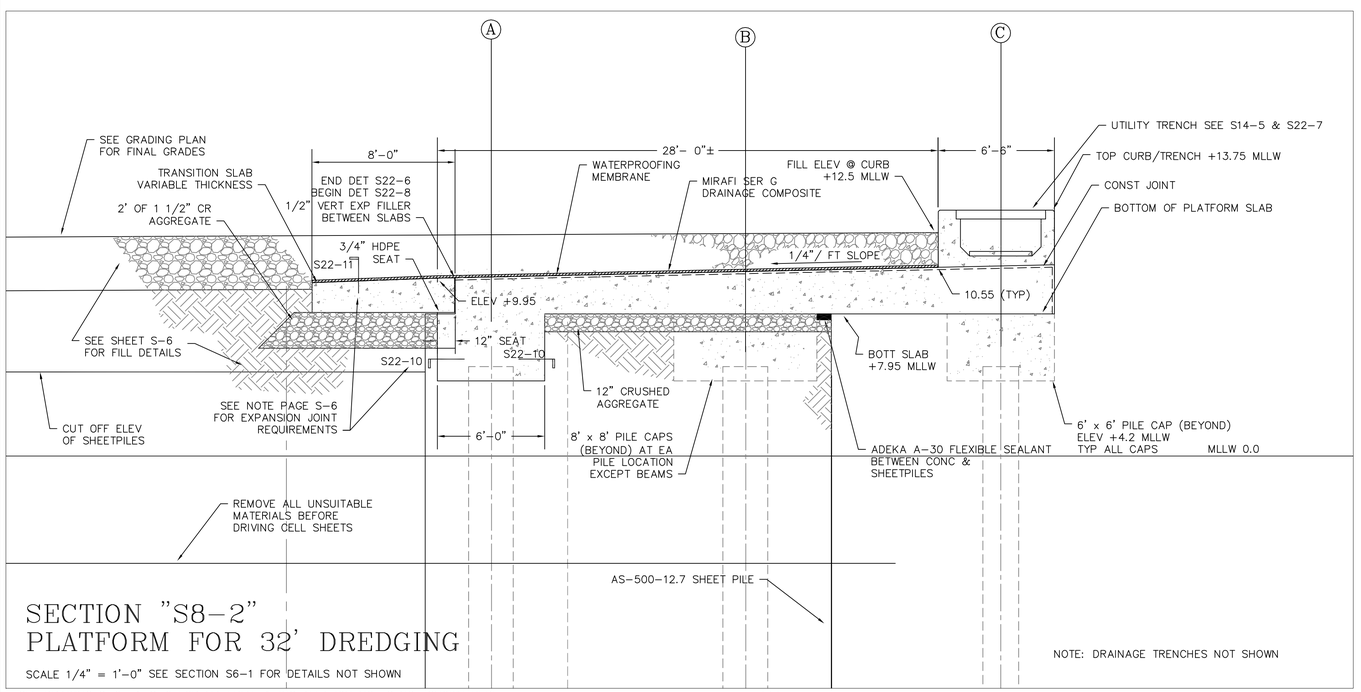

SECTION "S8-2"
PLATFORM FOR 32' DREDGING

SCALE 1/4" = 1'-0" SEE SECTION S6-1 FOR DETAILS NOT SHOWN

SEE DRAWING S-6 & S-0 FOR MATERIAL & INSTALLATION NOTES NOT SHOWN HERE

COMMONWEALTH OF MASSACHUSETTS
JOHN A. DeRUGERIS
CIVIL
NO. 32842
REGISTERED PROFESSIONAL ENGINEER
6-29-12

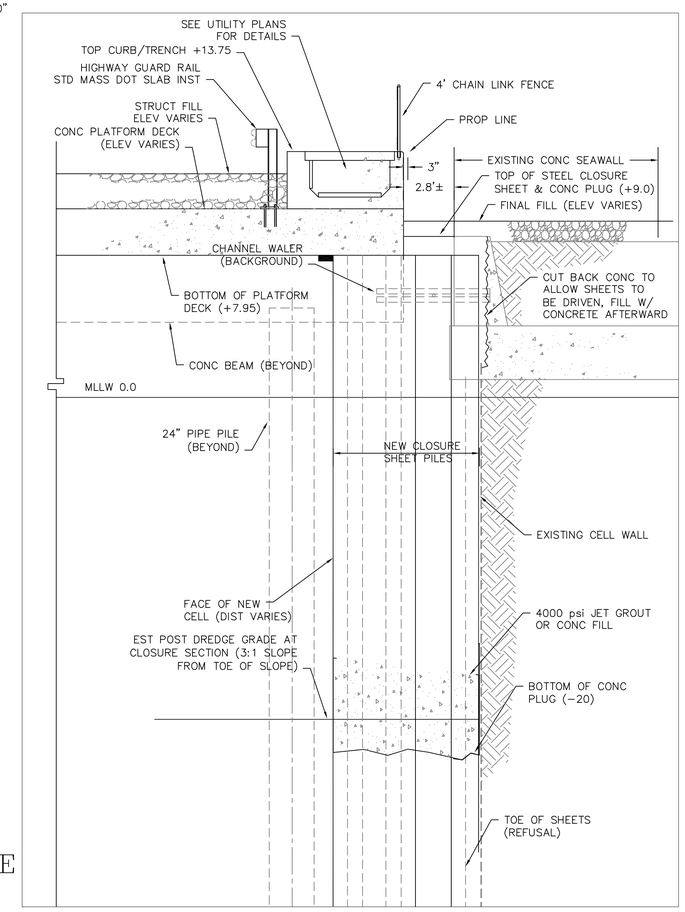

SECTION "S8-4"
NORTH END DECK & CLOSURE

SCALE 1/4" = 1'-0"

APEX

ROCKVILLE, MD
SOUTH WINDSOR, CT - BOSTON, MA - NEW BEDFORD, MA - HOLYOKE, MA

184 HIGH STREET, SUITE 502
BOSTON, MA 02210

58H CONNECTICUT AVENUE
SOUTH WINDSOR, CT

This drawings prepared by Apex for this project are instruments of Apex's service for use solely with respect to this project, and Apex shall be deemed the author of the Drawing and shall retain all common law, statutory and other reserved rights with respect thereto, including the copyright. The Documents shall not be used on other projects, for additions to this project or for completion of this project by others, except by agreement in writing and with appropriate compensation to Apex. .

cleengineering
15 Creek Road | Marion, Massachusetts 02738
t: 508.748.0937 | www.cleengineering.com

It is a violation of law for any person unless he is acting under the direction of a licensed professional engineer to alter this document. This drawing was prepared at the scale indicated in the title block. Inaccuracies in the stated scale may be introduced when drawings are reproduced by any means. (Use the graphic scale bar to determine the actual scale of this drawing)

PROJECT
NEW BEDFORD MARINE COMMERCE TERMINAL

OWNER
MASSACHUSETTS CLEAN ENERGY COUNCIL
55 SUMMER STREET, 9TH FLOOR
BOSTON, MASSACHUSETTS

NO.	DATE	DESCRIPTION	BY
1	6/29/12	MISC. REVISIONS	SN/JD

PROJECT NO.	10068.100
CADD FILE	SoTerminal_Final
DESIGNED BY	JDR – (CLE)
DRAWN BY	JDR – (CLE)
CHECKED BY	SEN / WR – (CLE)
DATE	12/23/11
DRAWING SCALE	AS NOTED

GRAPHIC SCALE
AS NOTED

SHEET TITLE
3-PILE SECTIONS
32' DREDGING

DRAWING NO.
S-8

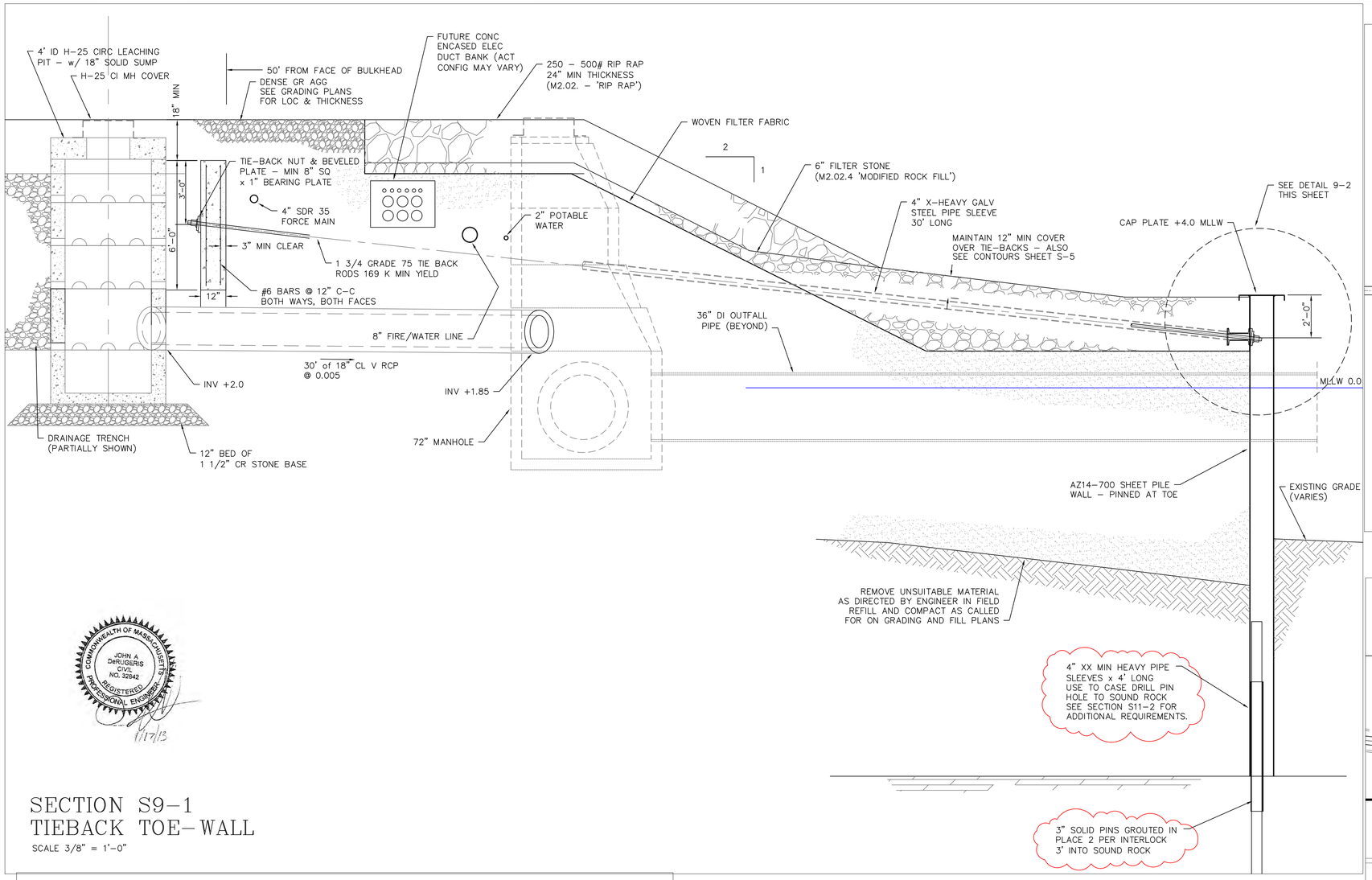

SECTION S9-1
TIEBACK TOE-WALL
SCALE 3/8" = 1'-0"

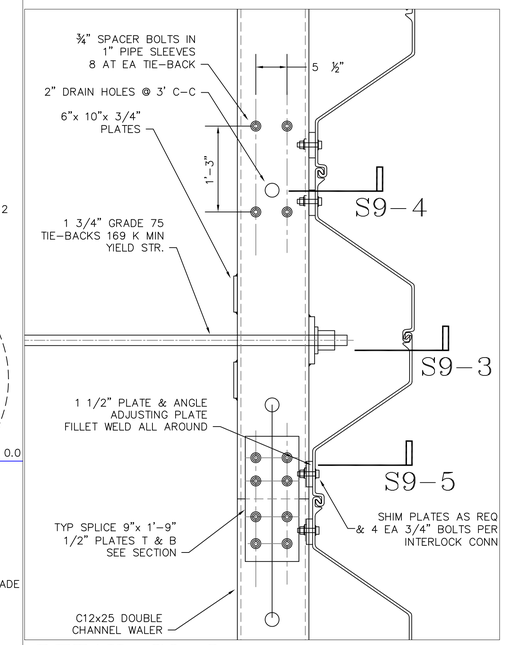

DETAIL S9-2
SCALE 1" = 1'-0"

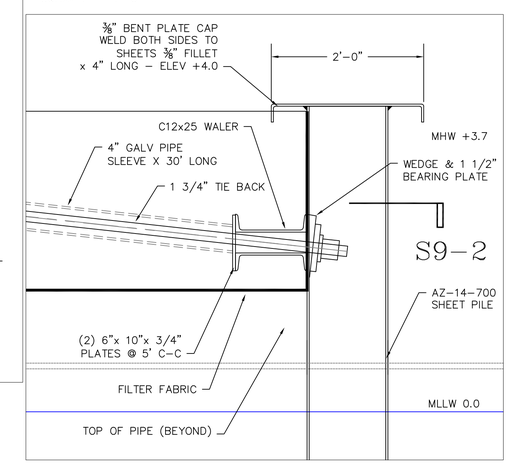

DETAIL S9-3
SCALE 1" = 1'-0"

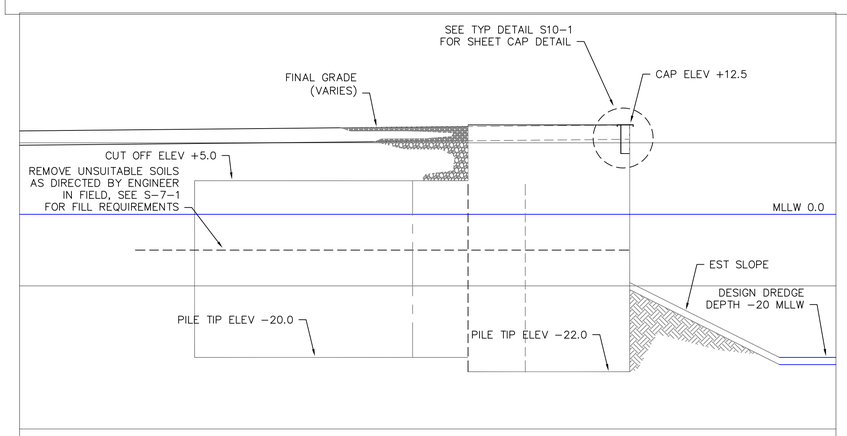

DETAIL S9-6
SCALE 1" = 10'-0" CELL 13 - TYPICAL SECTION

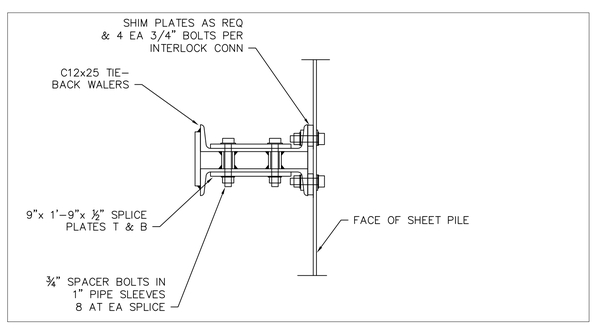

DETAIL S9-5 SCALE 1 1/2" = 1'-0"

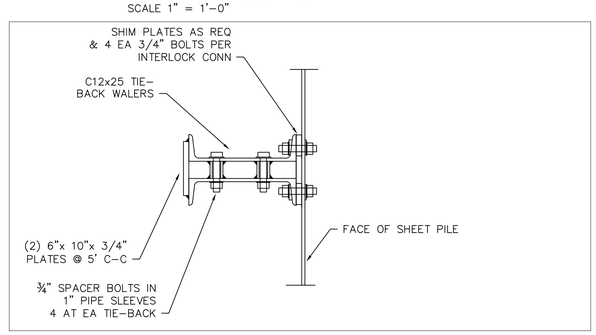

DETAIL S9-4 SCALE 1 1/2" = 1'-0"

APEX

ROCKVILLE, MD
SOUTH WINDSOR, CT - BOSTON, MA - NEW BEDFORD, MA - HOLYOKE, MA

184 HIGH STREET, SUITE 502
BOSTON, MA 02210

58H CONNECTICUT AVENUE
SOUTH WINDSOR, CT

This drawings prepared by Apex for this project are instruments of Apex's service for use solely with respect to this project, and Apex shall be deemed the author of the Drawing and shall retain all common law, statutory and other reserved rights with respect thereto, including the copyright. The Documents shall not be used on other projects, for additions to this project or for completion of this project by others, except by agreement in writing and with appropriate compensation to Apex.

cleengineering
15 Creek Road | Marion, Massachusetts 02738
t: 508.748.0937 | www.cleengineering.com

It is a violation of law for any person unless he is acting under the direction of a licensed professional engineer to alter this document. This drawing was prepared at the scale indicated in the title block. Inaccuracies in the stated scale may be introduced when drawings are reproduced by any means. (Use the graphic scale bar to determine the actual scale of this drawing)

PROJECT
NEW BEDFORD MARINE COMMERCE TERMINAL

OWNER
MASSACHUSETTS CLEAN ENERGY COUNCIL
55 SUMMER STREET, 9TH FLOOR
BOSTON, MASSACHUSETTS

NO.	DATE	DESCRIPTION	BY
1	6/26/12	MISC. REVISIONS	SN/JD
2	1/15/13	REVISE PIN PILE CONN	JD

PROJECT NO.	10068.100
CADD FILE	SoTerminal_Final
DESIGNED BY	JDR - (CLE)
DRAWN BY	JDR - (CLE)
CHECKED BY	SEN / WR - (CLE)
DATE	12/23/11
DRAWING SCALE	AS NOTED

GRAPHIC SCALE
AS NOTED

SHEET TITLE
SOUTH BULKHEAD SECTION VIEW

DRAWING NO.
S-9

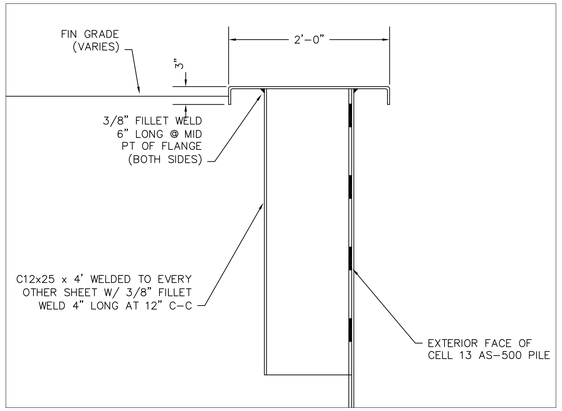

DETAIL S10-1
SCALE 1" = 1'-0"

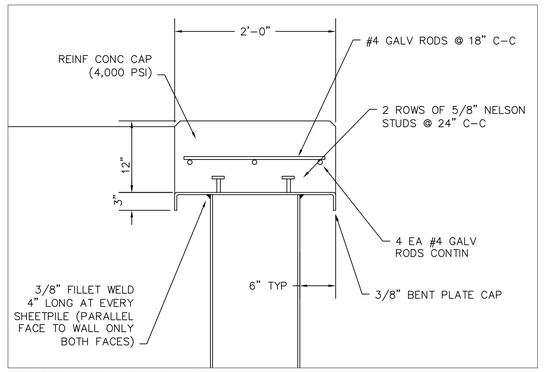

DETAIL S10-2 NOTE: ALL EXPOSED METAL TO BE COATED AS CALLED FOR - FOR SHEET PILES
SCALE 1" = 1'-0"

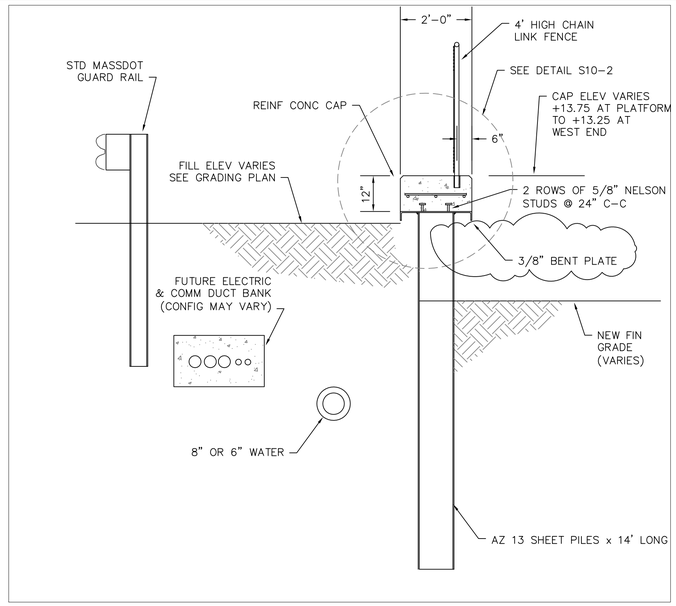

SECTION S10-3
SHEET PILE BULKHEAD AT NORTH PROP LINE
SCALE 1/2" = 1'-0"

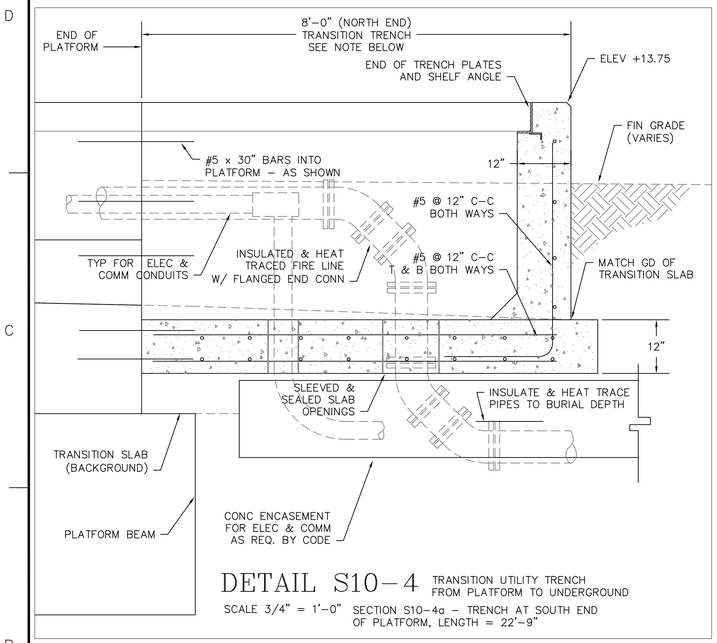

DETAIL S10-4 TRANSITION UTILITY TRENCH FROM PLATFORM TO UNDERGROUND
SCALE 3/4" = 1'-0" SECTION S10-4a - TRENCH AT SOUTH END OF PLATFORM, LENGTH = 22'-9"

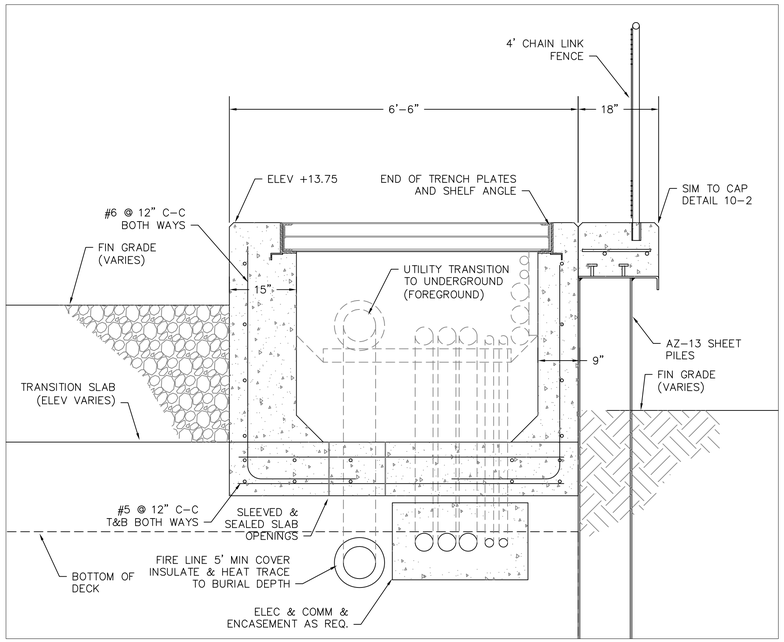

DETAIL S10-5 TRANSITION UTILITY TRENCH FROM PLATFORM TO UNDERGROUND
SCALE 3/4" = 1'-0"

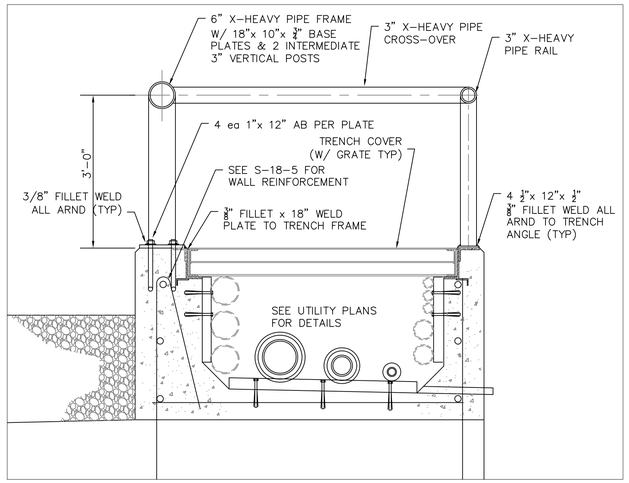

SECTION S10-6
UTILITY TRENCH RISER GUARD
SCALE 3/4" = 1'-0"

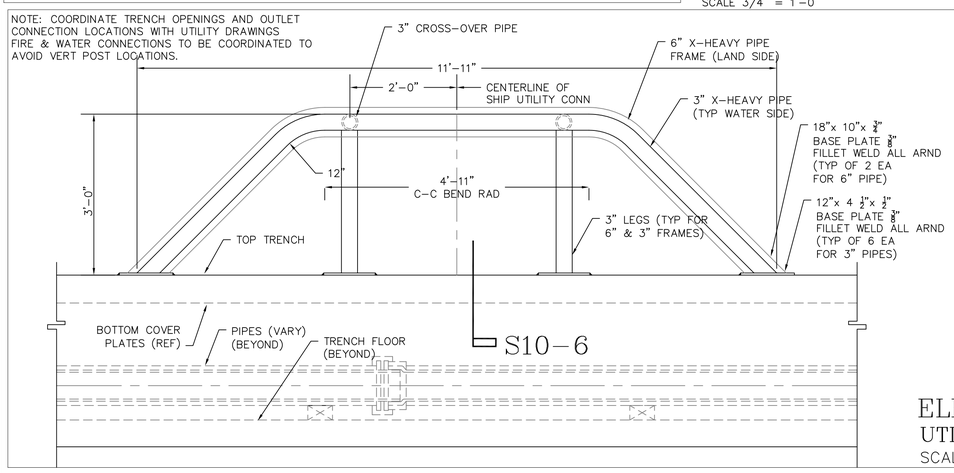

ELEVATION S10-7
UTILITY TRENCH RISER GUARD
SCALE 3/4" = 1'-0"

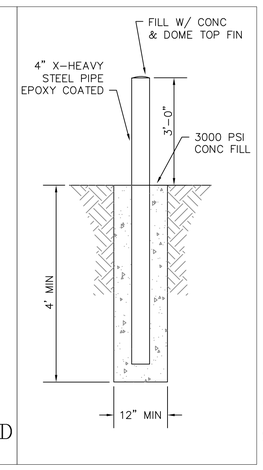

DETAIL S10-8
TYP 4" PIPE GUARD
SCALE 1/2" = 1'-0"

APEX

ROCKVILLE, MD
SOUTH WINDSOR, CT - BOSTON, MA - NEW BEDFORD, MA - HOLYOKE, MA

184 HIGH STREET, SUITE 502
BOSTON, MA 02210

56H CONNECTICUT AVENUE
SOUTH WINDSOR, CT

This drawings prepared by Apex for this project are instruments of Apex's service for use solely with respect to this project, and Apex shall be deemed the author of the Drawing and shall retain all common law, statutory and other reserved rights with respect thereto, including the copyright. The Documents shall not be used on other projects, for additions to this project or for completion of this project by others, except by agreement in writing and with appropriate compensation to Apex.

cleengineering
15 Creek Road | Marion, Massachusetts 02738
t: 508.748.0937 | www.cleengineering.com

It is a violation of law for any person unless he is acting under the direction of a licensed professional engineer to alter this document. This drawing was prepared at the scale indicated in the title block. Inaccuracies in the stated scale may be introduced when drawings are reproduced by any means. (Use the graphic scale bar to determine the actual scale of this drawing)

PROJECT
NEW BEDFORD MARINE COMMERCE TERMINAL

OWNER
MASSACHUSETTS CLEAN ENERGY COUNCIL
55 SUMMER STREET, 9TH FLOOR
BOSTON, MASSACHUSETTS

NO.	DATE	DESCRIPTION	BY
1	4-4-13	REM TIE-BACK S10-3	JD

PROJECT NO.	10068.100
CADD FILE	SoTerminal_Final
DESIGNED BY	JDR - (CLE)
DRAWN BY	JDR - (CLE)
CHECKED BY	SEN / WR - (CLE)
DATE	12/23/11
DRAWING SCALE	AS NOTED

GRAPHIC SCALE
AS NOTED

SHEET TITLE
MISC. DETAILS

DRAWING NO.
S-10

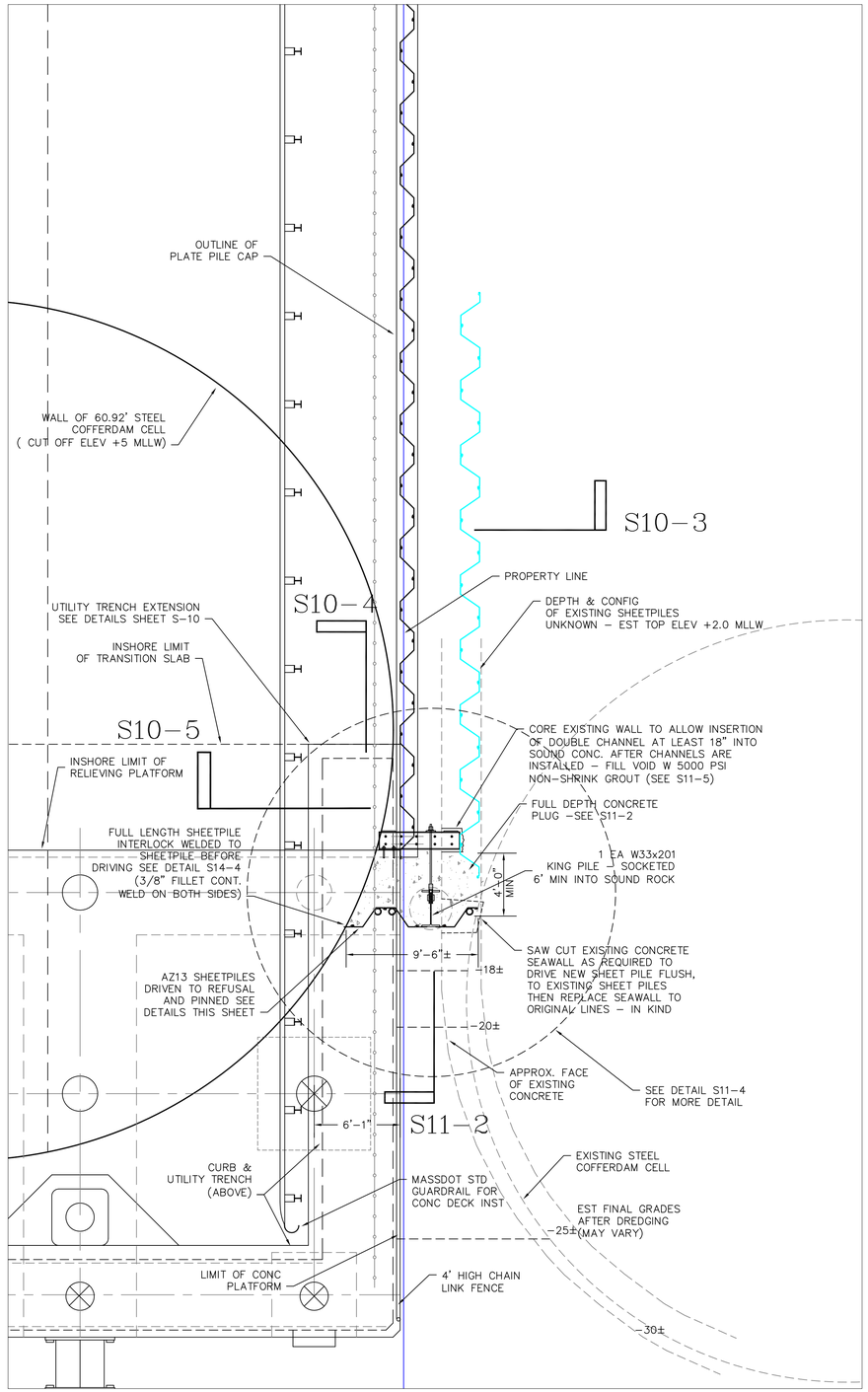

DETAIL S11-1
SHEET PILE TIE IN TO EXISTING TERMINAL BULKHEAD
SCALE 1" = 5'-0"

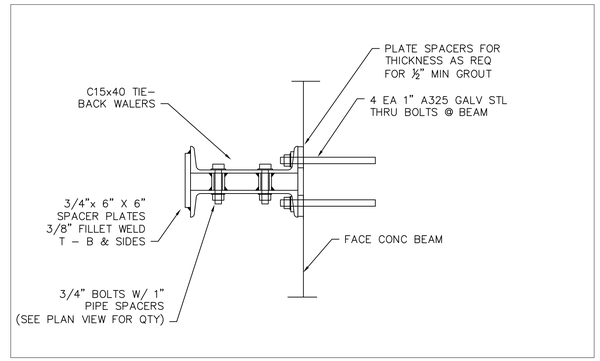

DETAIL S11-3
SCALE 1 1/2" = 1'-0"

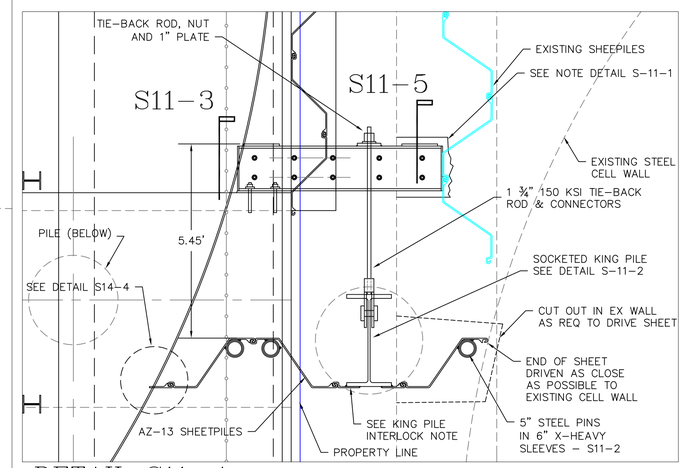

DETAIL S11-4
KING PILE DETAIL
1/2" = 1'-0" KING PILE INTERLOCK NOTE: WELD CUT SECTION OF COMPATIBLE INTERLOCK TO KING PILE AT BOTH ENDS OF FLANGE (FULL LENGTH), AND WELD AT BOTH EDGES W/ CONTIN 3/8" FILLET WELD

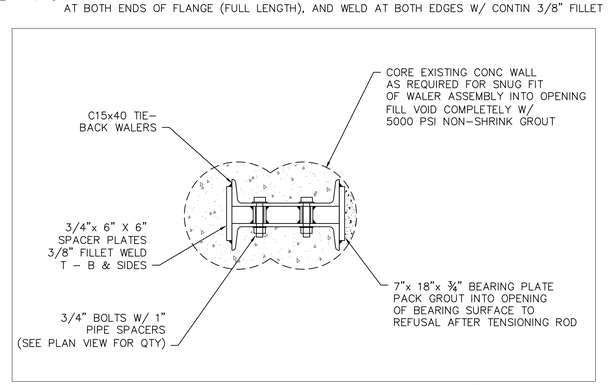

DETAIL S11-5
SCALE 1 1/2" = 1'-0"

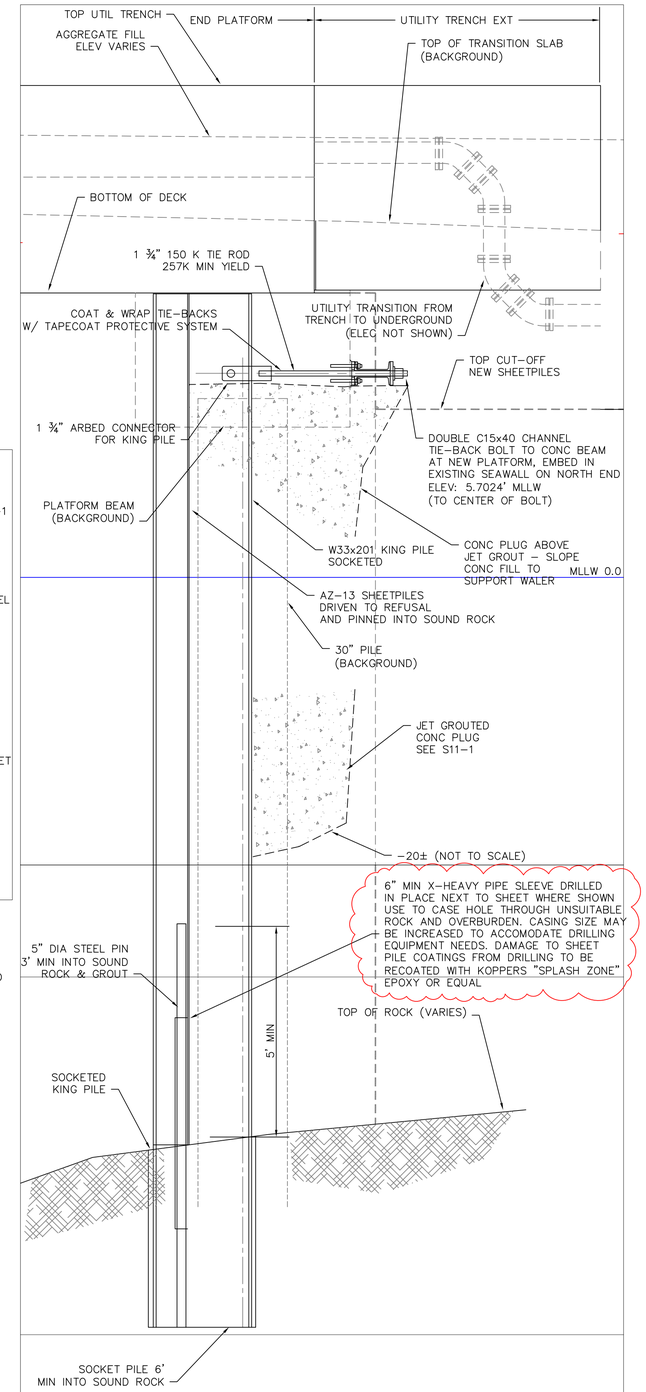

DETAIL S11-2
KING PILE DETAIL
SCALE 1/2" = 1'-0"

COMMONWEALTH OF MASSACHUSETTS
JOHN A. DeRUGERIS
CIVIL
NO. 32642
REGISTERED PROFESSIONAL ENGINEER
1/17/13

APEX

ROCKVILLE, MD
SOUTH WINDSOR, CT - BOSTON, MA - NEW BEDFORD, MA - HOLYOKE, MA

184 HIGH STREET, SUITE 502
BOSTON, MA 02210

58H CONNECTICUT AVENUE
SOUTH WINDSOR, CT

This drawings prepared by Apex for this project are instruments of Apex's service for use solely with respect to this project, and Apex shall be deemed the author of the Drawing and shall retain all common law, statutory and other reserved rights with respect thereto, including the copyright. The Documents shall not be used on other projects, for additions to this project or for completion of this project by others, except by agreement in writing and with appropriate compensation to Apex. .

cleengineering
15 Creek Road | Marion, Massachusetts 02738
t: 508.748.0937 | www.cleengineering.com
It is a violation of law for any person unless he is acting under the direction of a licensed professional engineer to alter this document. This drawing was prepared at the scale indicated in the title block. Inaccuracies in the stated scale may be introduced when drawings are reproduced by any means. (Use the graphic scale bar to determine the actual scale of this drawing)

PROJECT
NEW BEDFORD MARINE COMMERCE TERMINAL

OWNER
MASSACHUSETTS CLEAN ENERGY COUNCIL
55 SUMMER STREET, 9TH FLOOR
BOSTON, MASSACHUSETTS

NO.	DATE	DESCRIPTION	BY
1	1-15-13	REVISE PILE PIN DETAIL	JD

PROJECT NO.	10068.100
CADD FILE	SoTerminal_Final
DESIGNED BY	JDR – (CLE)
DRAWN BY	JDR – (CLE)
CHECKED BY	SEN / WR – (CLE)
DATE	12/23/11
DRAWING SCALE	AS NOTED

GRAPHIC SCALE
AS NOTED

SHEET TITLE
NORTH BULKHEAD DETAILS

DRAWING NO.
S-11

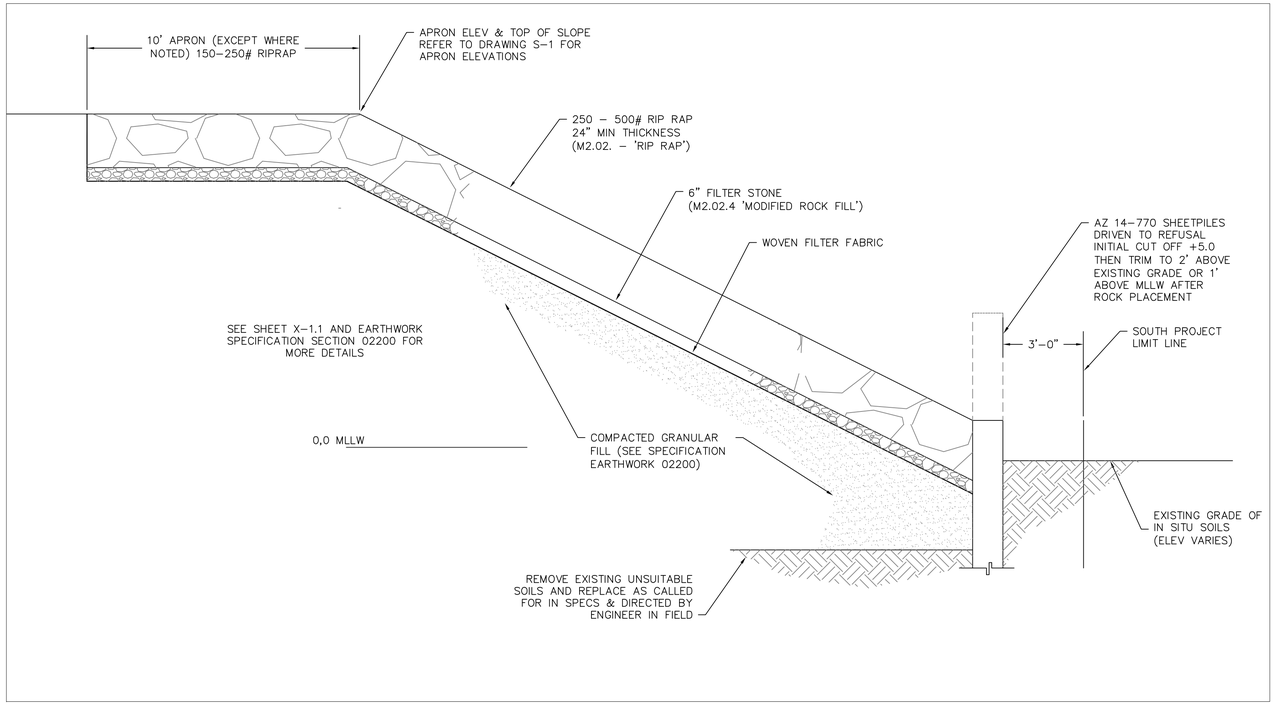

SECTION S12–1
RIP–RAP REVETMENT (WITH TOE WALL)
SCALE 3/8" = 1'–0"

NOTES:
1. REMOVE ORGANIC SILT DOWN TO COMPETENT BEARING SURFACE AS DIRECTED BY ENGINEER PRIOR TO PLACEMENT OF BACKFILL.
2. DREDGE/ EXCAVATE BEHIND TOE–WALL UNTIL CLEAN SAND MATERIAL IS EXPOSED (MONITOR DREDGE MATERIAL FOR PRESENCE OF ORGANIC SILT).
3. REFERENCE M2.01.1 – CRUSHED STONE, M2.02.0 – 'RIP RAP', M2.02.04 – 'MODIFIED ROCK FILL' – MA DOT "STANDARD SPECS FOR HIGHWAYS & BRIDGES" 1988; DIVISION III "MATERIALS SPECIFICATIONS"

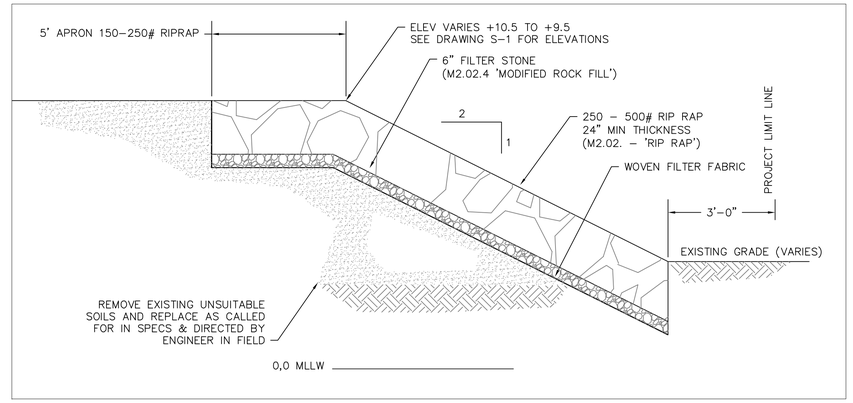

SECTION S12–2
RIP–RAP REVETMENT (WITHOUT TOE WALL)
SCALE 3/8" = 1'–0"

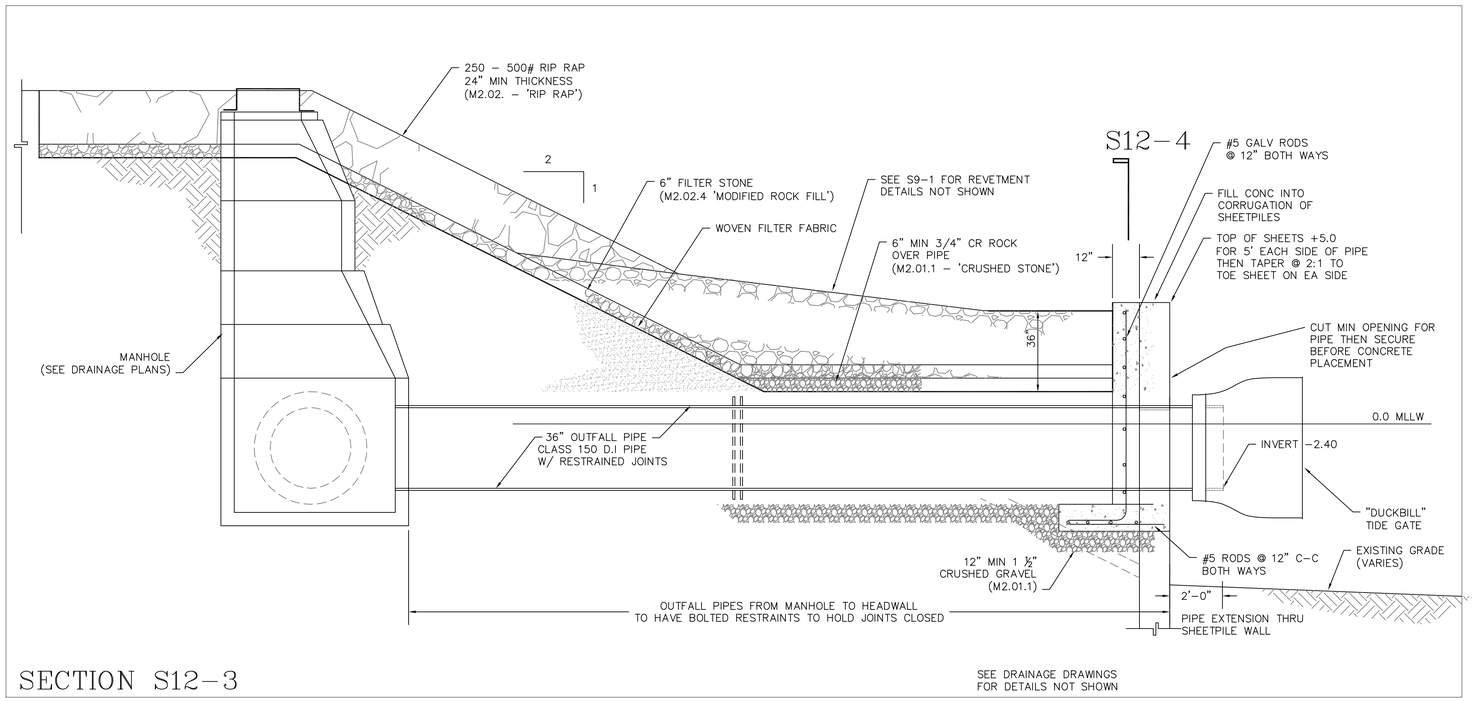

SECTION S12–3
OUTFALL OPENING AT RIP–RAP REVETMENT
SCALE 3/8" = 1'–0"

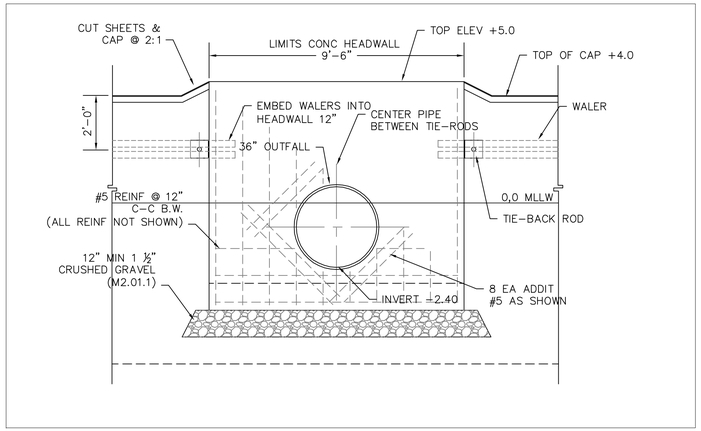

DETAIL S12–4
SCALE 3/8" = 1'–0"

COMMONWEALTH OF MASSACHUSETTS
JOHN A. DeRUGERIS
CIVIL
NO. 32842
REGISTERED PROFESSIONAL ENGINEER
6-29-12

APEX

ROCKVILLE, MD
SOUTH WINDSOR, CT - BOSTON, CT - NEW BEDFORD, MA - HOLYOKE, MA

184 HIGH STREET, SUITE 502
BOSTON, MA 02210

58H CONNECTICUT AVENUE
SOUTH WINDSOR, CT

This drawings prepared by Apex for this project are instruments of Apex's service for use solely with respect to this project, and Apex shall be deemed the author of the Drawing and shall retain all common law, statutory and other reserved rights with respect thereto, including the copyright. The Documents shall not be used on other projects, for additions to this project or for completion of this project by others, except by agreement in writing and with appropriate compensation to Apex. .

cleengineering
15 Creek Road | Marion, Massachusetts 02738
t: 508.748.0937 | www.cleengineering.com

It is a violation of law for any person unless he is acting under the direction of a licensed professional engineer to alter this document. This drawing was prepared at the scale indicated in the title block. Inaccuracies in the stated scale may be introduced when drawings are reproduced by any means. (Use the graphic scale bar to determine the actual scale of this drawing)

PROJECT
NEW BEDFORD MARINE COMMERCE TERMINAL

OWNER
MASSACHUSETTS CLEAN ENERGY COUNCIL
55 SUMMER STREET, 9TH FLOOR
BOSTON, MASSACHUSETTS

NO.	DATE	DESCRIPTION	BY

PROJECT NO.	10068.100
CADD FILE	SoTerminal_Final
DESIGNED BY	JDR – (CLE)
DRAWN BY	JDR – (CLE)
CHECKED BY	SEN / WR – (CLE)
DATE	12/23/11
DRAWING SCALE	AS NOTED

GRAPHIC SCALE
AS NOTED

SHEET TITLE
SOUTH REVETMENT

DRAWING NO.
S-12

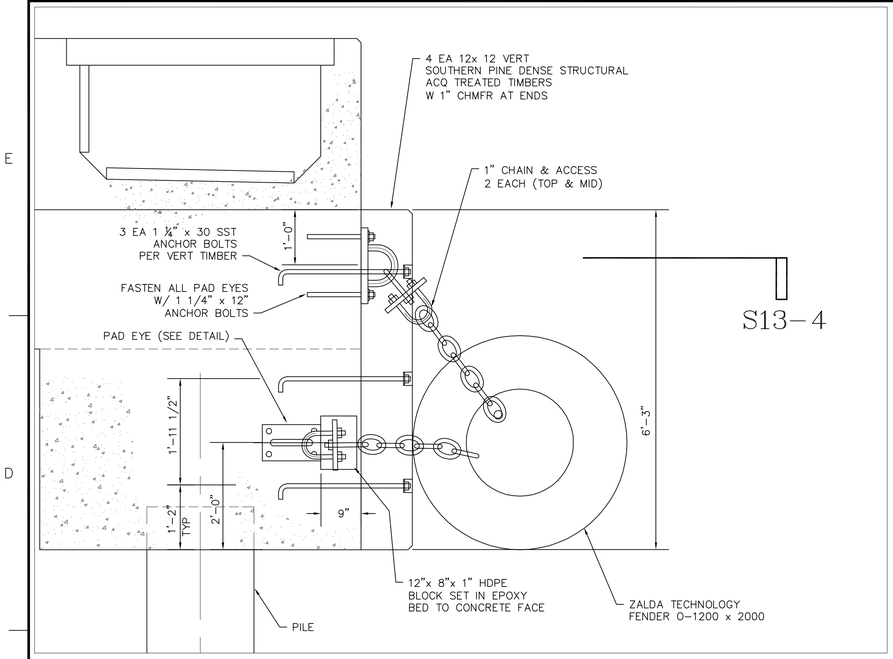

SECTION "S13-2"
TYP BARGE BERTH FENDER
SCALE 3/4" = 1'-0"

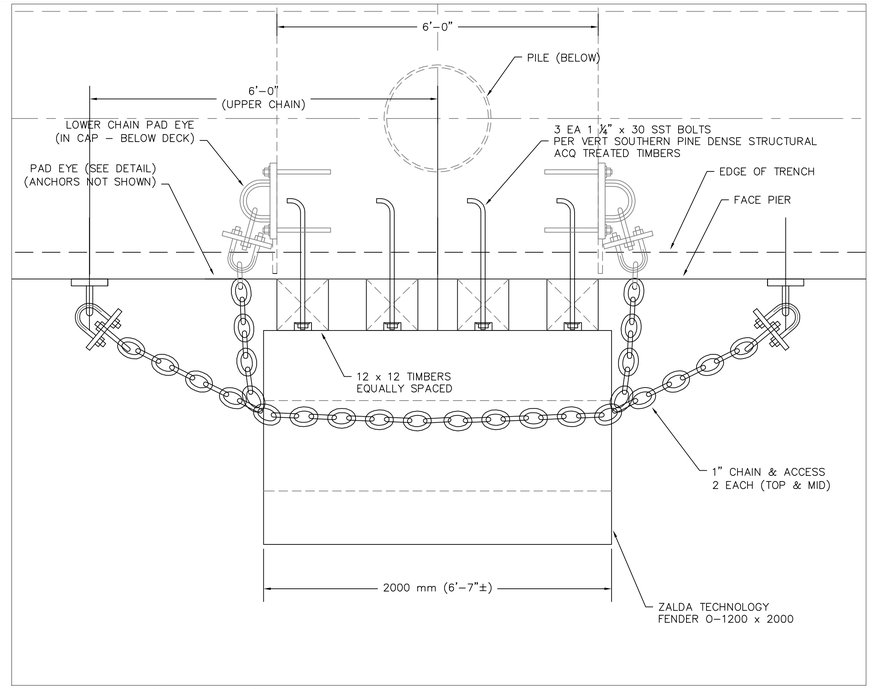

SECTION "S13-4"
TYP BARGE BERTH FENDER
SCALE 3/4" = 1'-0"

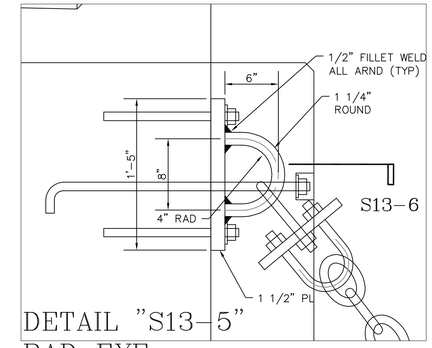

DETAIL "S13-5"
PAD EYE
SCALE 1 1/2" = 1'-0"

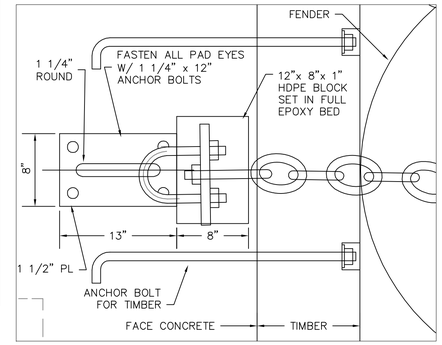

DETAIL "S13-6"
PAD EYE
SCALE 1 1/2" = 1'-0"

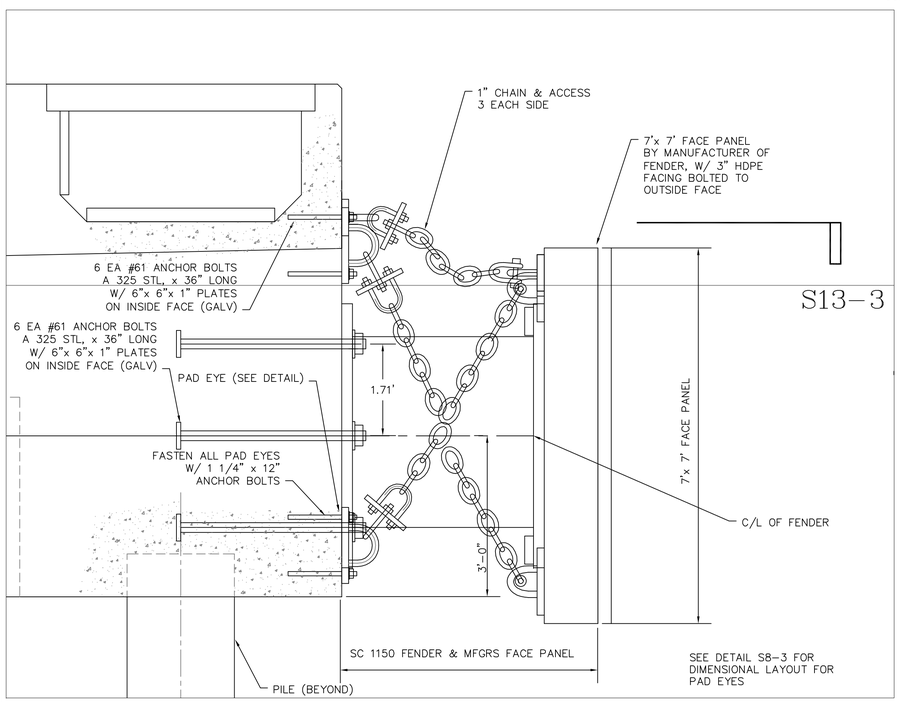

SECTION "S13-1"
TYP SHIP BERTH FENDER
SCALE 3/4" = 1'-0"

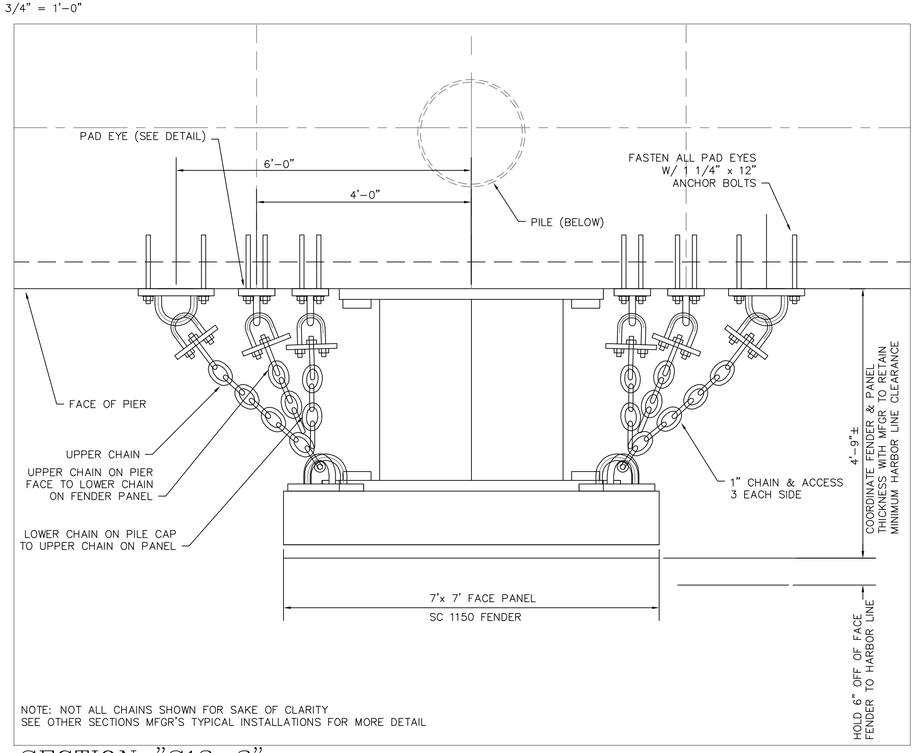

NOTE: NOT ALL CHAINS SHOWN FOR SAKE OF CLARITY
SEE OTHER SECTIONS MFGR'S TYPICAL INSTALLATIONS FOR MORE DETAIL

SECTION "S13-3"
TYP SHIP BERTH FENDER
SCALE 3/4" = 1'-0"

APEX

ROCKVILLE, MD
SOUTH WINDSOR, CT - BOSTON, MA -
NEW BEDFORD, MA - HOLYOKE, MA

184 HIGH STREET, SUITE 502
BOSTON, MA 02210

58H CONNECTICUT AVENUE
SOUTH WINDSOR, CT

This drawings prepared by Apex for this project are instruments of Apex's service for use solely with respect to this project, and Apex shall be deemed the author of the Drawing and shall retain all common law, statutory and other reserved rights with respect thereto, including the copyright. The Documents shall not be used on other projects, for additions to this project or for completion of this project by others, except by agreement in writing and with appropriate compensation to Apex. .

cleengineering
15 Creek Road | Marion, Massachusetts 02738
t: 508.748.0937 | www.cleengineering.com

It is a violation of law for any person unless he is acting under the direction of a licensed professional engineer to alter this document. This drawing was prepared at the scale indicated in the title block. Inaccuracies in the stated scale may be introduced when drawings are reproduced by any means. (Use the graphic scale bar to determine the actual scale of this drawing)

PROJECT
NEW BEDFORD
MARINE COMMERCE
TERMINAL

OWNER
MASSACHUSETTS CLEAN ENERGY COUNCIL
55 SUMMER STREET, 9TH FLOOR
BOSTON, MASSACHUSETTS

NO.	DATE	DESCRIPTION	BY

PROJECT NO.	10068.100
CADD FILE	SoTerminal_Final
DESIGNED BY	JDR – (CLE)
DRAWN BY	JDR – (CLE)
CHECKED BY	SEN / WR – (CLE)
DATE	12/23/11
DRAWING SCALE	AS NOTED

GRAPHIC SCALE
AS NOTED

SHEET TITLE
FENDER
DETAILS

DRAWING NO.
S-13

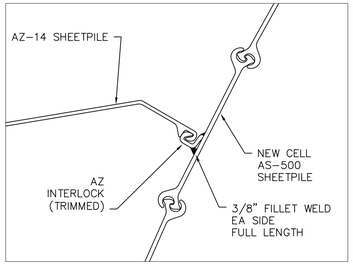

DETAIL S14-2
SCALE 1 1/2" = 1'-0"

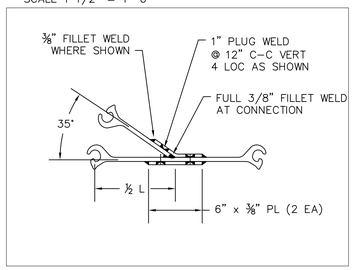

DETAIL S14-3
SCALE 1 1/2" = 1'-0" TYP JUNCTION PILE

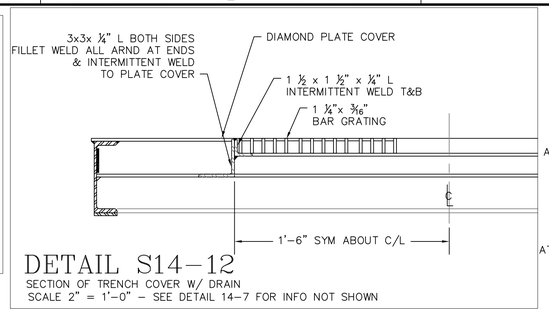

DETAIL S14-12
SECTION OF TRENCH COVER W/ DRAIN
SCALE 2" = 1'-0" - SEE DETAIL 14-7 FOR INFO NOT SHOWN

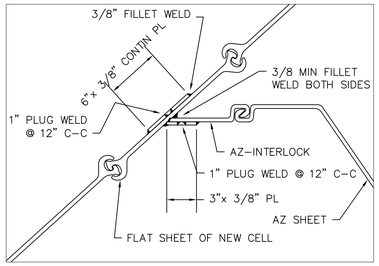

DETAIL S14-4
SCALE 1 1/2" = 1'-0" TYP AZ PILE CONN TO NEW CELL

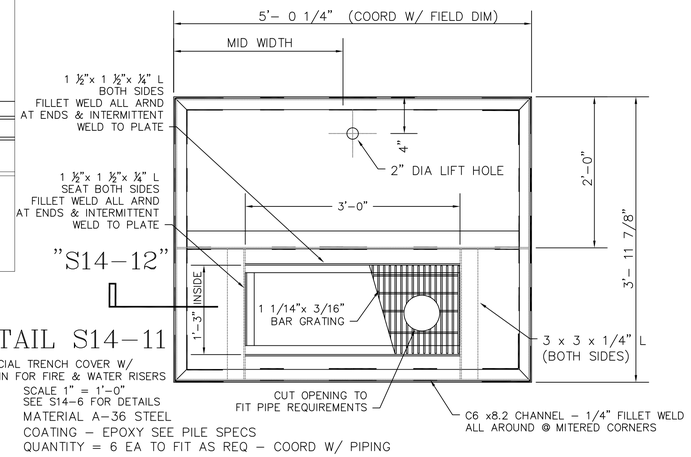

DETAIL S14-11
SPECIAL TRENCH COVER W/ DRAIN FOR FIRE & WATER RISERS
SCALE 1" = 1'-0"
SEE S14-6 FOR DETAILS
MATERIAL A-36 STEEL
COATING - EPOXY SEE PILE SPECS
QUANTITY = 6 EA TO FIT AS REQ - COORD W/ PIPING

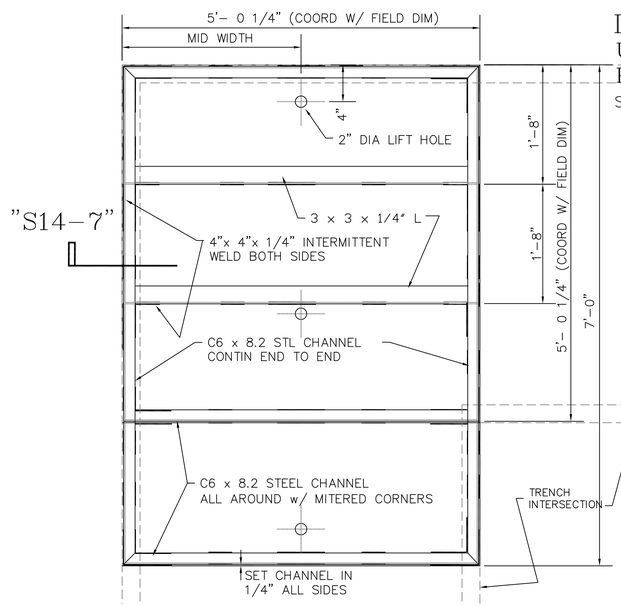

DETAIL S14-10 (left)
UTILITY TRENCH COVER PLATE AT CORNERS
SCALE 1" = 1'-0"

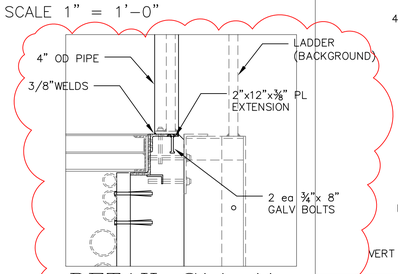

DETAIL S14-11
SCALE 1"=1'-0"
4" POST CONN DETAIL

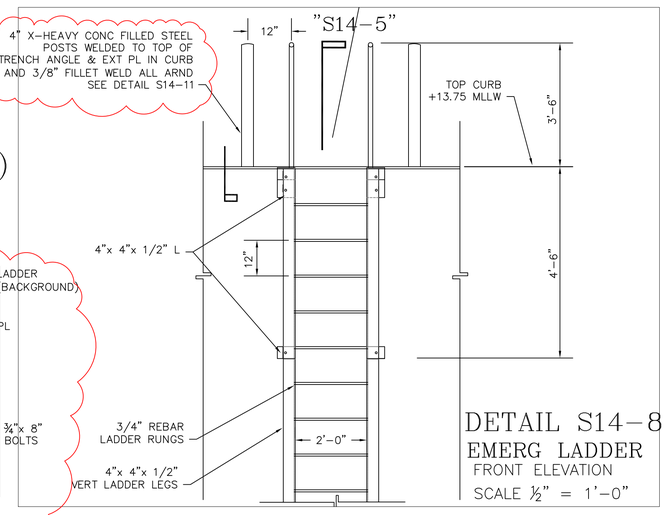

DETAIL S14-8
EMERG LADDER
FRONT ELEVATION
SCALE ½" = 1'-0"

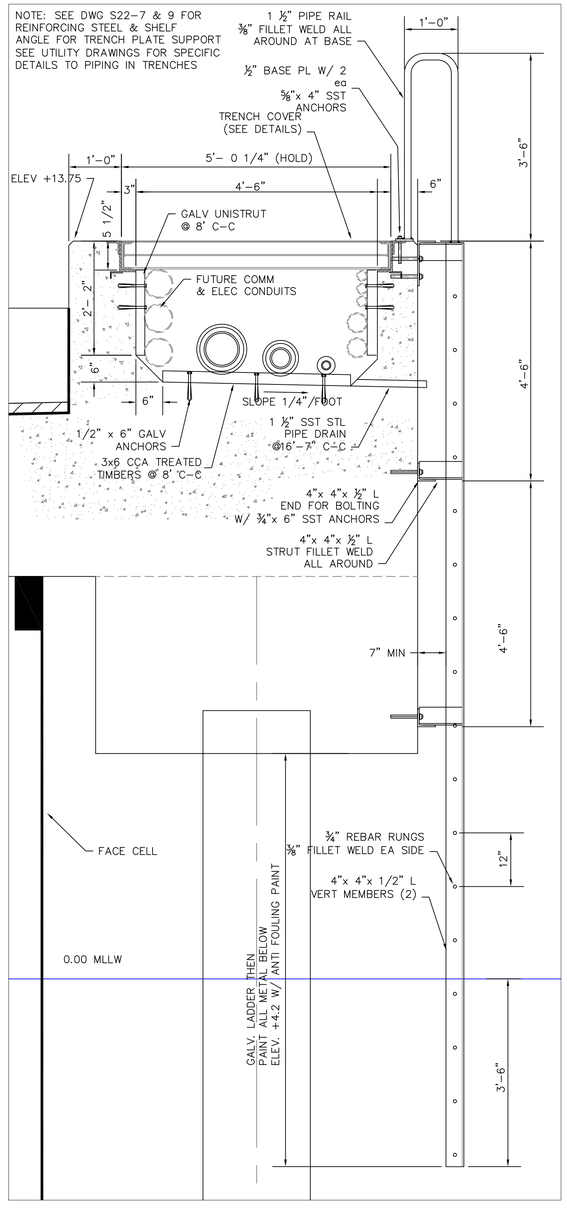

DETAIL S14-5
UTILITY TRENCH & EMERG LADDER
SCALE ¾" = 1'-0"

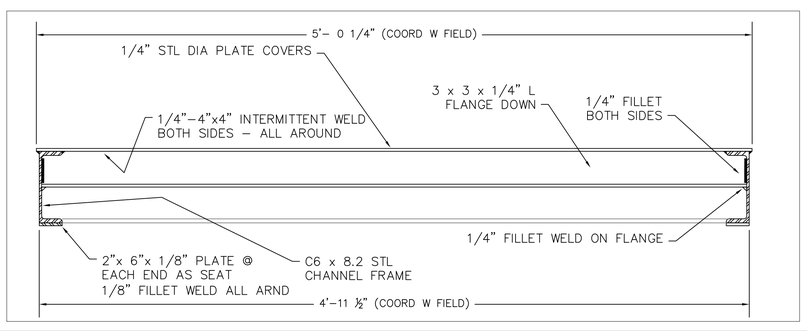

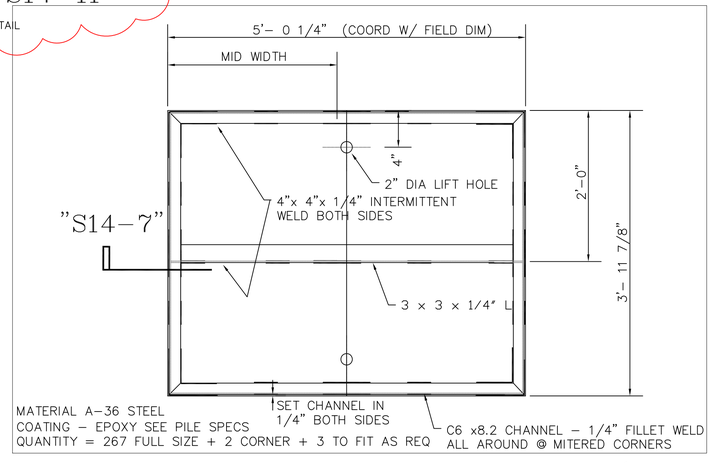

MATERIAL A-36 STEEL
COATING - EPOXY SEE PILE SPECS
QUANTITY = 267 FULL SIZE + 2 CORNER + 3 TO FIT AS REQ

DETAIL S14-7 (left)
UTILITY TRENCH COVER PLATE
SCALE 2" = 1'-0"

DETAIL S14-6 (above)
UTILITY TRENCH COVER PLATE
SCALE 1" = 1'-0"

APEX

ROCKVILLE, MD
SOUTH WINDSOR, CT - BOSTON, MA - NEW BEDFORD, MA - HOLYOKE, MA

184 HIGH STREET, SUITE 502
BOSTON, MA 02210

58H CONNECTICUT AVENUE
SOUTH WINDSOR, CT

This drawings prepared by Apex for this project are instruments of Apex's service for use solely with respect to this project, and Apex shall be deemed the author of the Drawing and shall retain all common law, statutory and other reserved rights with respect thereto, including the copyright. The Documents shall not be used on other projects, for additions to this project or for completion of this project by others, except by agreement in writing and with appropriate compensation to Apex.

cleengineering
15 Creek Road | Marion, Massachusetts 02738
t: 508.748.0937 | www.cleengineering.com
It is a violation of law for any person unless he is acting under the direction of a licensed professional engineer to alter this document. This drawing was prepared at the scale indicated in the title block. Inaccuracies in the stated scale may be introduced when drawings are reproduced by any means. (Use the graphic scale bar to determine the actual scale of this drawing)

PROJECT
NEW BEDFORD MARINE COMMERCE TERMINAL

OWNER
MASSACHUSETTS CLEAN ENERGY COUNCIL
55 SUMMER STREET, 9TH FLOOR
BOSTON, MASSACHUSETTS

NO.	DATE	DESCRIPTION	BY
1	1/15/13	REV S14-8, ADD S14-11	JD

PROJECT NO.	10068.100
CADD FILE	SoTerminal_Final
DESIGNED BY	JDR - (CLE)
DRAWN BY	JDR - (CLE)
CHECKED BY	SEN / WR - (CLE)
DATE	12/23/11
DRAWING SCALE	AS NOTED

GRAPHIC SCALE
AS NOTED

SHEET TITLE
BULKHEAD & UTILITY TRENCH DETAILS

DRAWING NO.
S-14

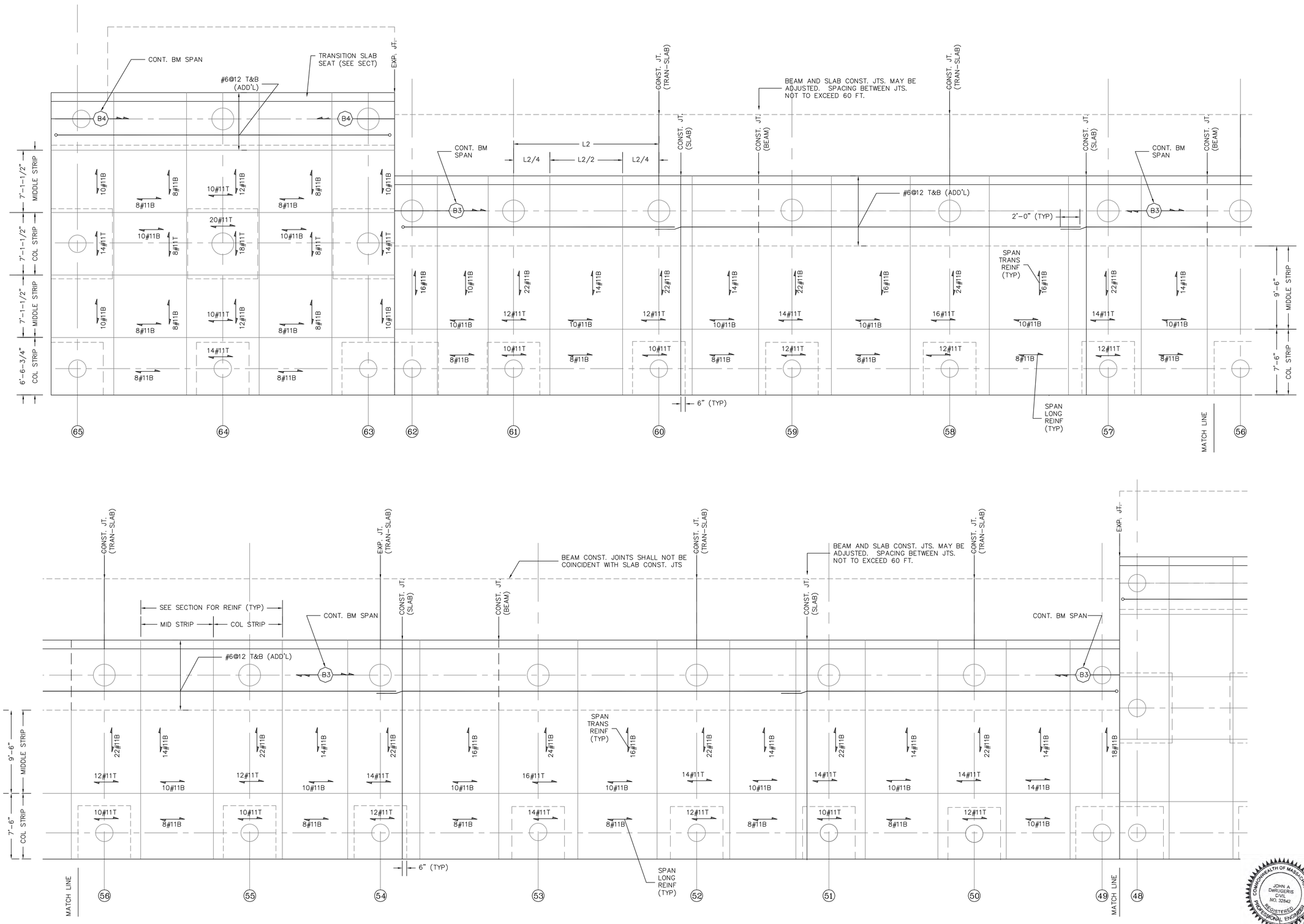

APEX

ROCKVILLE, MD
SOUTH WINDSOR, CT - BOSTON, MA - NEW BEDFORD, MA - HOLYOKE, MA

184 HIGH STREET, SUITE 502
BOSTON, MA 02210

58H CONNECTICUT AVENUE
SOUTH WINDSOR, CT

This drawings prepared by Apex for this project are instruments of Apex's service for use solely with respect to this project, and Apex shall be deemed the author of the Drawing and shall retain all common law, statutory and other reserved rights with respect thereto, including the copyright. The Documents shall not be used on other projects, for additions to this project or for completion of this project by others, except by agreement in writing and with appropriate compensation to Apex. .

cleengineering
15 Creek Road | Marion, Massachusetts 02738
t: 508.748.0937 | www.cleengineering.com

It is a violation of law for any person unless he is acting under the direction of a licensed professional engineer to alter this document. This drawing was prepared at the scale indicated in the title block. Inaccuracies in the stated scale may be introduced when drawings are reproduced by any means. (Use the graphic scale bar to determine the actual scale of this drawing)

PROJECT
NEW BEDFORD MARINE COMMERCE TERMINAL

OWNER
MASSACHUSETTS CLEAN ENERGY COUNCIL
55 SUMMER STREET, 9TH FLOOR
BOSTON, MASSACHUSETTS

NO.	DATE	DESCRIPTION	BY

PROJECT NO.	10068.100
CADD FILE	SoTerminal_Final-Concrete
DESIGNED BY	JDR / JL - (CLE)
DRAWN BY	JDR / JL - (CLE)
CHECKED BY	SEN / WR - (CLE)
DATE	12/23/11
DRAWING SCALE	AS NOTED

GRAPHIC SCALE
1" = 5'

SHEET TITLE
DECK REINFORCING STEEL: CONCRETE 32' DREDGING

DRAWING NO.
S-15

COMMONWEALTH OF MASSACHUSETTS
JOHN A. DeRUGERIS
CIVIL
NO. 32842
REGISTERED PROFESSIONAL ENGINEER
1-29-2

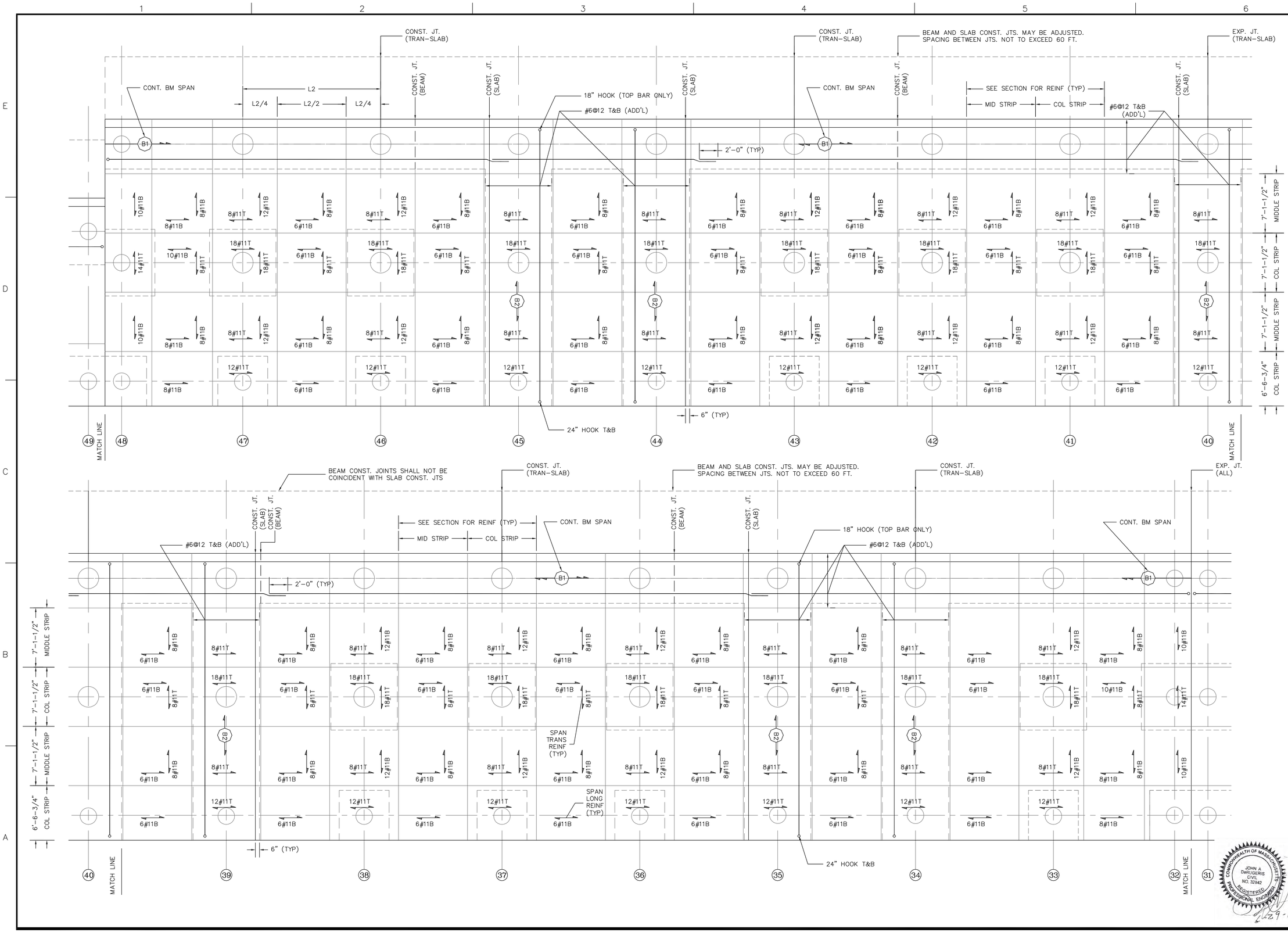

APEX

ROCKVILLE, MD
SOUTH WINDSOR, CT - BOSTON, MA - NEW BEDFORD, MA - HOLYOKE, MA

184 HIGH STREET, SUITE 502
BOSTON, MA 02210

58H CONNECTICUT AVENUE
SOUTH WINDSOR, CT

This drawings prepared by Apex for this project are instruments of Apex's service for use solely with respect to this project, and Apex shall be deemed the author of the Drawing and shall retain all common law, statutory and other reserved rights with respect thereto, including the copyright. The Documents shall not be used on other projects, for additions to this project or for completion of this project by others, except by agreement in writing and with appropriate compensation to Apex. .

cleengineering

15 Creek Road | Marion, Massachusetts 02738
t: 508.748.0937 | www.cleengineering.com

It is a violation of law for any person unless he is acting under the direction of a licensed professional engineer to alter this document. This drawing was prepared at the scale indicated in the title block. Inaccuracies in the stated scale may be introduced when drawings are reproduced by any means. (Use the graphic scale bar to determine the actual scale of this drawing)

PROJECT

NEW BEDFORD MARINE COMMERCE TERMINAL

OWNER

MASSACHUSETTS CLEAN ENERGY COUNCIL
55 SUMMER STREET, 9TH FLOOR
BOSTON, MASSACHUSETTS

NO.	DATE	DESCRIPTION	BY

PROJECT NO.	10068.100
CADD FILE	SoTerminal_Final-Concrete
DESIGNED BY	JDR / JL - (CLE)
DRAWN BY	JDR / JL - (CLE)
CHECKED BY	SEN / WR - (CLE)
DATE	12/23/11
DRAWING SCALE	AS NOTED

GRAPHIC SCALE

1" = 5'

SHEET TITLE

DECK REINFORCING STEEL: CONCRETE 32' DREDGING

DRAWING NO.

S-16

COMMONWEALTH OF MASSACHUSETTS
JOHN A. DARIGERIS
CIVIL
NO. 32842
REGISTERED PROFESSIONAL ENGINEER

2/29/12

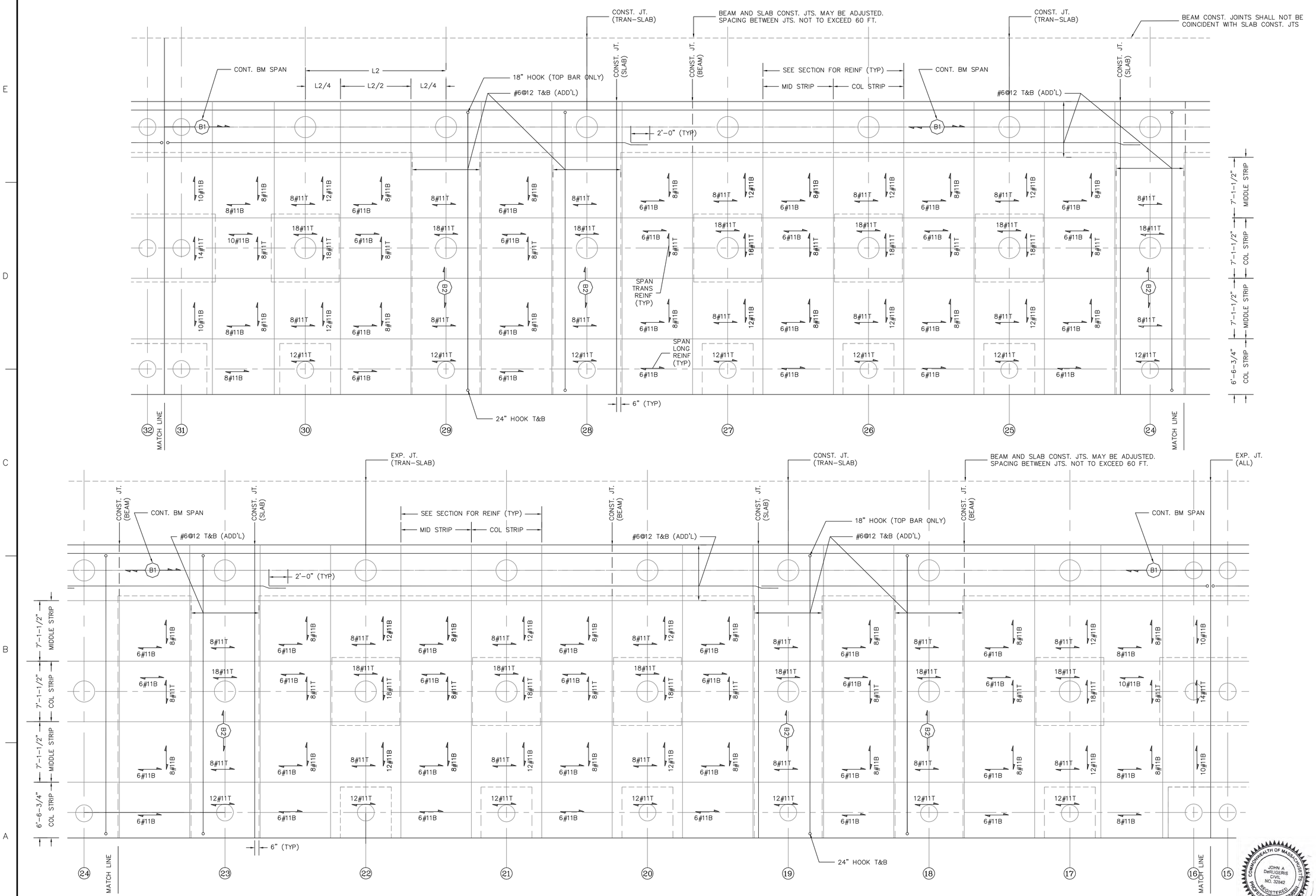

APEX

ROCKVILLE, MD
SOUTH WINDSOR, CT - BOSTON, MA - NEW BEDFORD, MA - HOLYOKE, MA

184 HIGH STREET, SUITE 502
BOSTON, MA 02210

58H CONNECTICUT AVENUE
SOUTH WINDSOR, CT

This drawings prepared by Apex for this project are instruments of Apex's service for use solely with respect to this project, and Apex shall be deemed the author of the Drawing and shall retain all common law, statutory and other reserved rights with respect thereto, including the copyright. The Documents shall not be used on other projects, for additions to this project or for completion of this project by others, except by agreement in writing and with appropriate compensation to Apex. .

cleengineering

15 Creek Road | Marion, Massachusetts 02738
t: 508.748.0937 | www.cleengineering.com

It is a violation of law for any person unless he is acting under the direction of a licensed professional engineer to alter this document. This drawing was prepared at the scale indicated in the title block. Inaccuracies in the stated scale may be introduced when drawings are reproduced by any means. (Use the graphic scale bar to determine the actual scale of this drawing)

PROJECT

NEW BEDFORD MARINE COMMERCE TERMINAL

OWNER

MASSACHUSETTS CLEAN ENERGY COUNCIL
55 SUMMER STREET, 9TH FLOOR
BOSTON, MASSACHUSETTS

NO.	DATE	DESCRIPTION	BY

PROJECT NO.	10068.100
CADD FILE	SoTerminal_Final-Concrete
DESIGNED BY	JDR / JL - (CLE)
DRAWN BY	JDR / JL - (CLE)
CHECKED BY	SEN / WR - (CLE)
DATE	12/23/11
DRAWING SCALE	AS NOTED

GRAPHIC SCALE

1" = 5'

SHEET TITLE

DECK REINFORCING STEEL: CONCRETE 32' DREDGING

COMMONWEALTH OF MASSACHUSETTS
JOHN A. DeRUGERIS
CIVIL
NO. 32642
REGISTERED PROFESSIONAL ENGINEER

2-29-12

DRAWING NO.

S-17

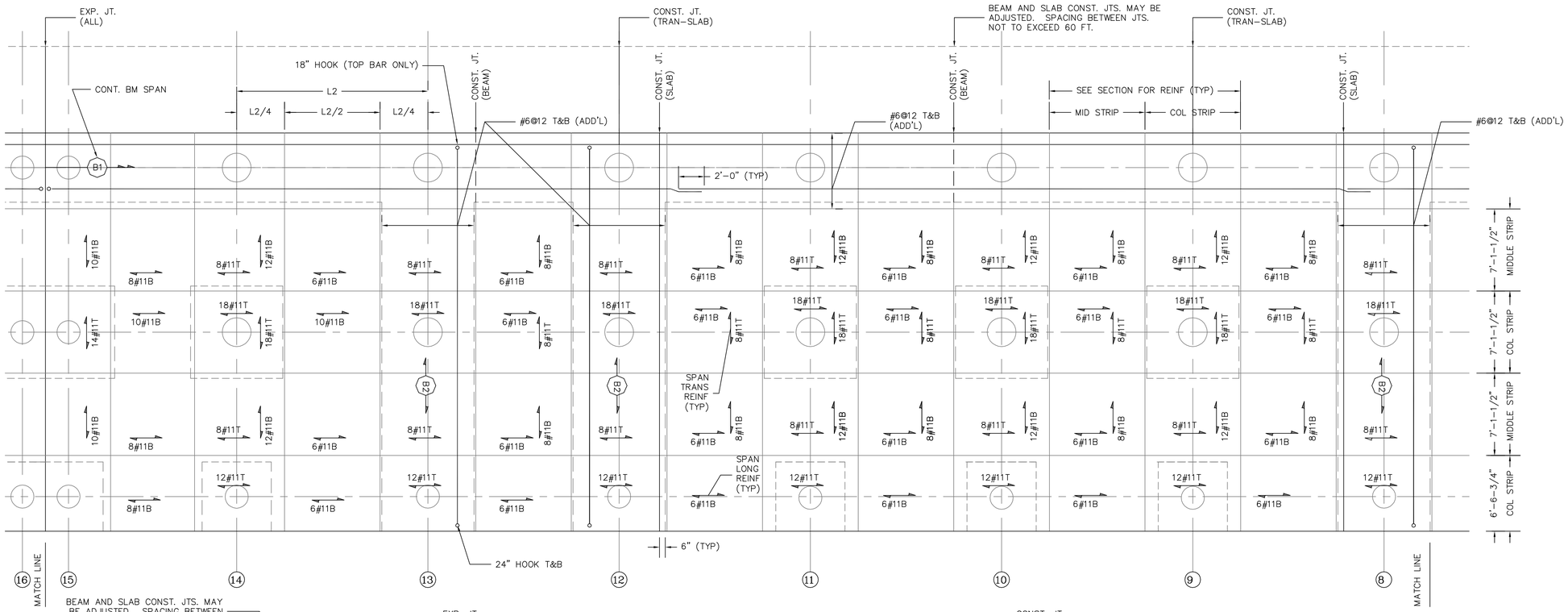

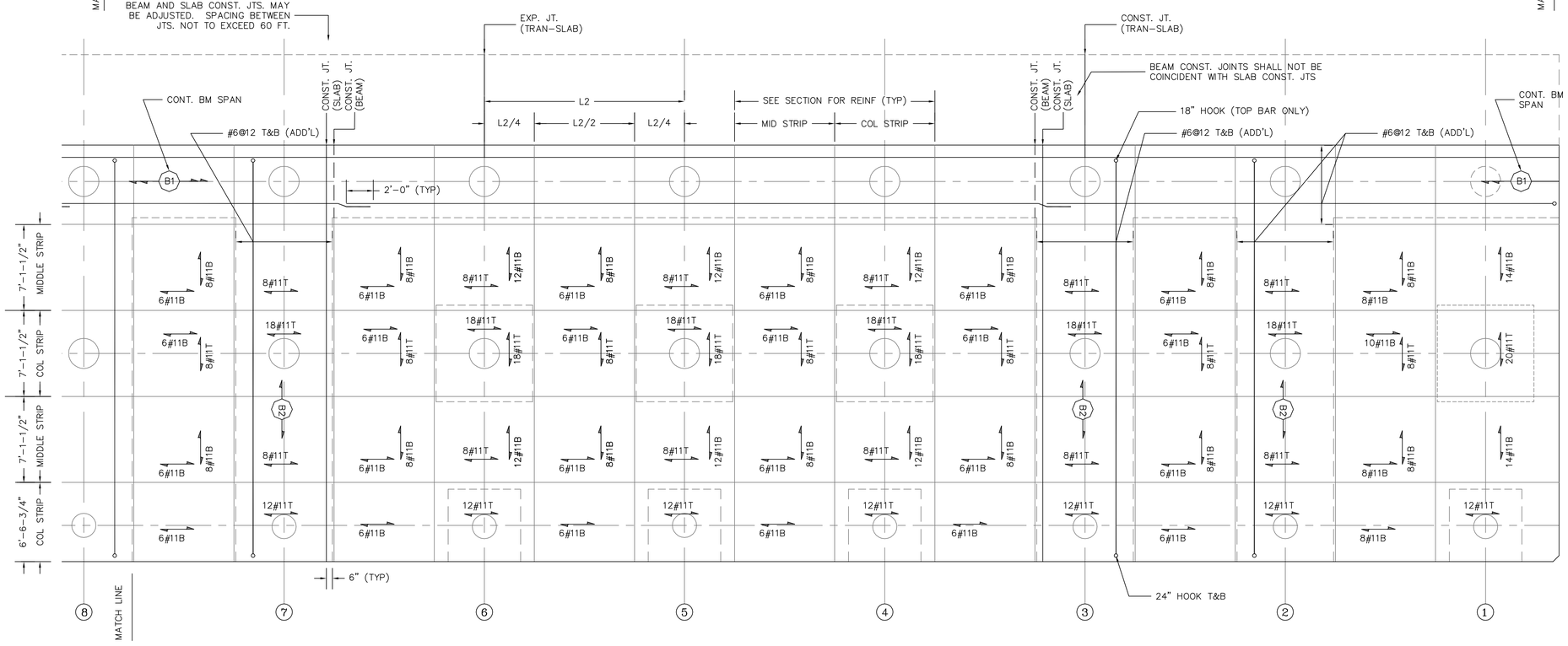

APEX

ROCKVILLE, MD
SOUTH WINDSOR, CT - BOSTON, MA - NEW BEDFORD, MA - HOLYOKE, MA

184 HIGH STREET, SUITE 502
BOSTON, MA 02210

58H CONNECTICUT AVENUE
SOUTH WINDSOR, CT

This drawings prepared by Apex for this project are instruments of Apex's service for use solely with respect to this project, and Apex shall be deemed the author of the Drawing and shall retain all common law, statutory and other reserved rights with respect thereto, including the copyright. The Documents shall not be used on other projects, for additions to this project or for completion of this project by others, except by agreement in writing and with appropriate compensation to Apex. .

cleengineering

15 Creek Road | Marion, Massachusetts 02738
t: 508.748.0937 | www.cleengineering.com

It is a violation of law for any person unless he is acting under the direction of a licensed professional engineer to alter this document. This drawing was prepared at the scale indicated in the title block. Inaccuracies in the stated scale may be introduced when drawings are reproduced by any means. (Use the graphic scale bar to determine the actual scale of this drawing)

PROJECT

NEW BEDFORD
MARINE COMMERCE
TERMINAL

OWNER

MASSACHUSETTS CLEAN ENERGY COUNCIL
55 SUMMER STREET, 9TH FLOOR
BOSTON, MASSACHUSETTS

NO.	DATE	DESCRIPTION	BY

PROJECT NO.	10068.100
CADD FILE	SoTerminal_Final-Concrete
DESIGNED BY	JDR / JL - (CLE)
DRAWN BY	JDR / JL - (CLE)
CHECKED BY	SEN / WR - (CLE)
DATE	12/23/11
DRAWING SCALE	AS NOTED

GRAPHIC SCALE

1" = 5'

SHEET TITLE

DECK
REINFORCING
STEEL

DRAWING NO.

S-18

COMMONWEALTH OF MASSACHUSETTS
JOHN A. DeRUGERIS
CIVIL
NO. 32842
REGISTERED PROFESSIONAL ENGINEER

2-29-12

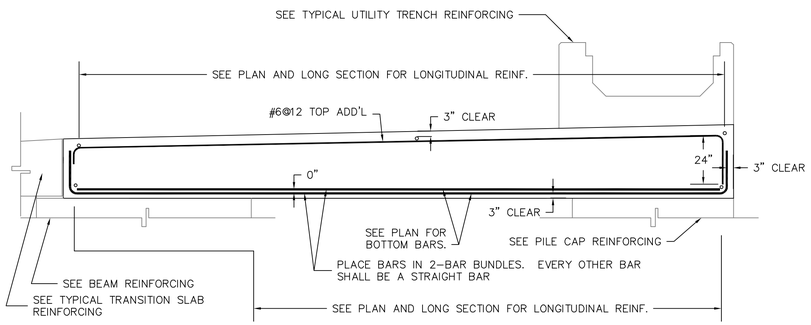

TYPICAL DECK TRANS. REINFORCEMENT GRID (49) – (62)
SLAB REINFORCEMENT COLUMN STRIP

NOT TO SCALE

NOTE: SEE OTHER DETAILS AS NOTED FOR ADDITIONAL REINFORCING WITHIN AND ADJACENT TO DECK SLAB.

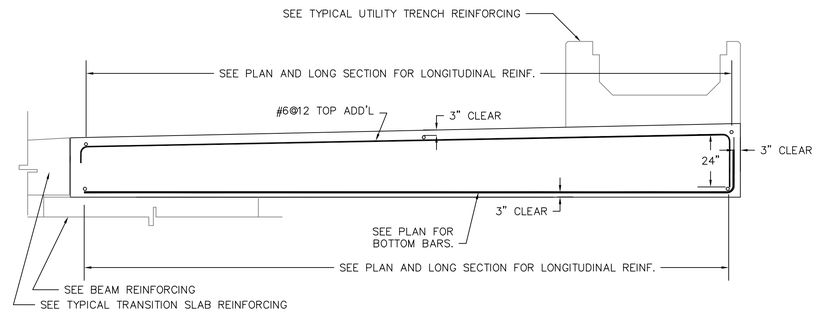

TYPICAL DECK TRANS. REINFORCEMENT GRID (49) – (62)
SLAB REINFORCEMENT MIDDLE STRIP

NOT TO SCALE

NOTE: SEE OTHER DETAILS AS NOTED FOR ADDITIONAL REINFORCING WITHIN AND ADJACENT TO DECK SLAB.

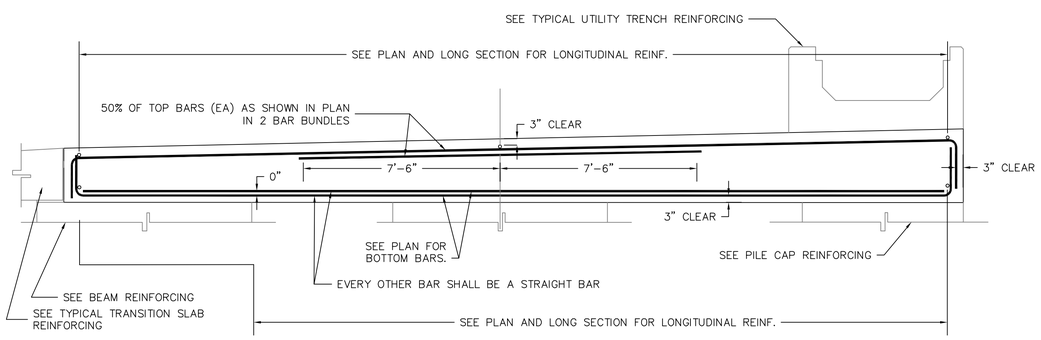

TYPICAL DECK TRANS. REINFORCEMENT GRID (1) – (48), (63) – (65)
SLAB REINFORCEMENT COLUMN STRIP

NOT TO SCALE

NOTE: SEE OTHER DETAILS AS NOTED FOR ADDITIONAL REINFORCING WITHIN AND ADJACENT TO DECK SLAB.

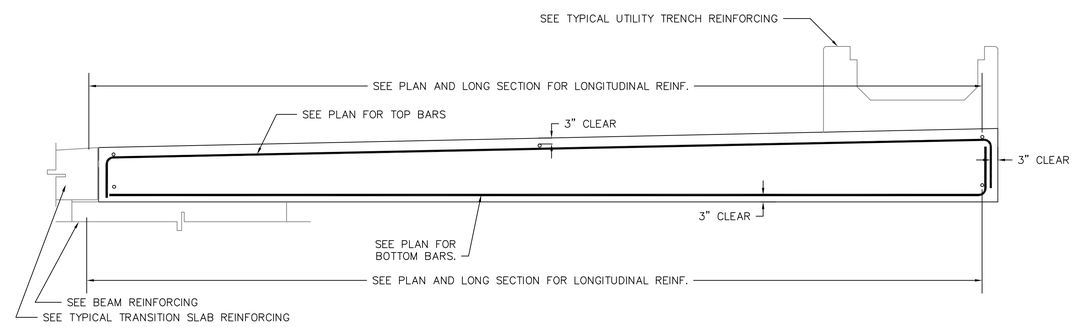

TYPICAL DECK TRANS. REINFORCEMENT GRID (1) – (48), (63) – (65)
SLAB REINFORCEMENT MIDDLE STRIP

NOT TO SCALE

NOTE: SEE OTHER DETAILS AS NOTED FOR ADDITIONAL REINFORCING WITHIN AND ADJACENT TO DECK SLAB.

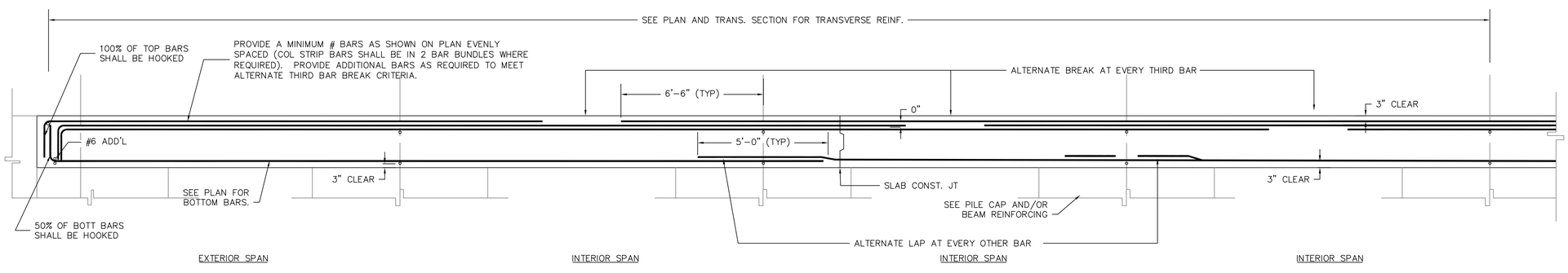

TYPICAL DECK LONG. REINFORCEMENT GRID (1) – (62)
SLAB REINFORCEMENT COLUMN AND MIDDLE STRIP

NOT TO SCALE

NOTE: SEE OTHER DETAILS AS NOTED FOR ADDITIONAL REINFORCING WITHIN AND ADJACENT TO DECK SLAB.

APEX

ROCKVILLE, MD
SOUTH WINDSOR, CT - BOSTON, MA - NEW BEDFORD, MA - HOLYOKE, MA

184 HIGH STREET, SUITE 502
BOSTON, MA 02210

58H CONNECTICUT AVENUE
SOUTH WINDSOR, CT

This drawings prepared by Apex for this project are instruments of Apex's service for use solely with respect to this project, and Apex shall be deemed the author of the Drawing and shall retain all common law, statutory and other reserved rights with respect thereto, including the copyright. The Documents shall not be used on other projects, for additions to this project or for completion of this project by others, except by agreement in writing and with appropriate compensation to Apex. .

cleengineering
15 Creek Road | Marion, Massachusetts 02738
t: 508.748.0937 | www.cleengineering.com

It is a violation of law for any person unless he is acting under the direction of a licensed professional engineer to alter this document. This drawing was prepared at the scale indicated in the title block. Inaccuracies in the stated scale may be introduced when drawings are reproduced by any means. (Use the graphic scale bar to determine the actual scale of this drawing)

PROJECT
NEW BEDFORD MARINE COMMERCE TERMINAL

OWNER
MASSACHUSETTS CLEAN ENERGY COUNCIL
55 SUMMER STREET, 9TH FLOOR
BOSTON, MASSACHUSETTS

NO.	DATE	DESCRIPTION	BY

PROJECT NO.	10068.100
CADD FILE	SoTerminal_Final-Concrete
DESIGNED BY	JDR / JL – (CLE)
DRAWN BY	JDR / JL – (CLE)
CHECKED BY	SEN / WR – (CLE)
DATE	12/23/11
DRAWING SCALE	AS NOTED

GRAPHIC SCALE
AS NOTED

SHEET TITLE
DECK REINFORCING STEEL: CONCRETE 20' DREDGING

DRAWING NO.
S-19

COMMONWEALTH OF MASSACHUSETTS
JOHN A. DeRUGERIS
CIVIL
NO. 32842
REGISTERED PROFESSIONAL ENGINEER
6-29-12

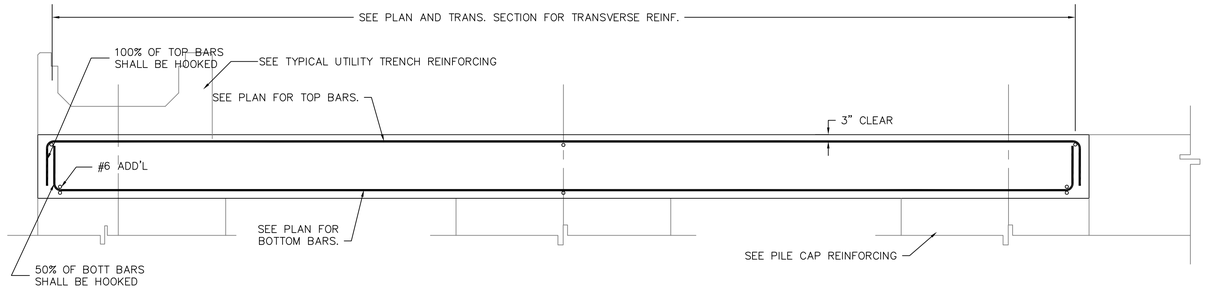

TYPICAL DECK LONG. REINF. GRID (63) – (65)
SLAB REINFORCEMENT COLUMN AND MIDDLE STRIP

NOT TO SCALE

NOTE: SEE OTHER DETAILS AS NOTED FOR ADDITIONAL REINFORCING WITHIN AND ADJACENT TO DECK SLAB.

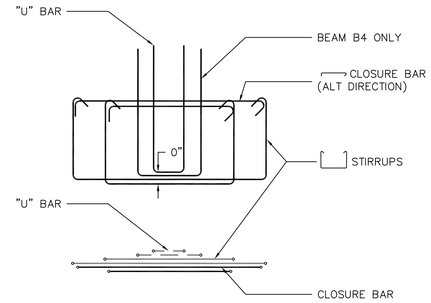

BEAM SHEAR REINFORCING LAYOUT DETAIL

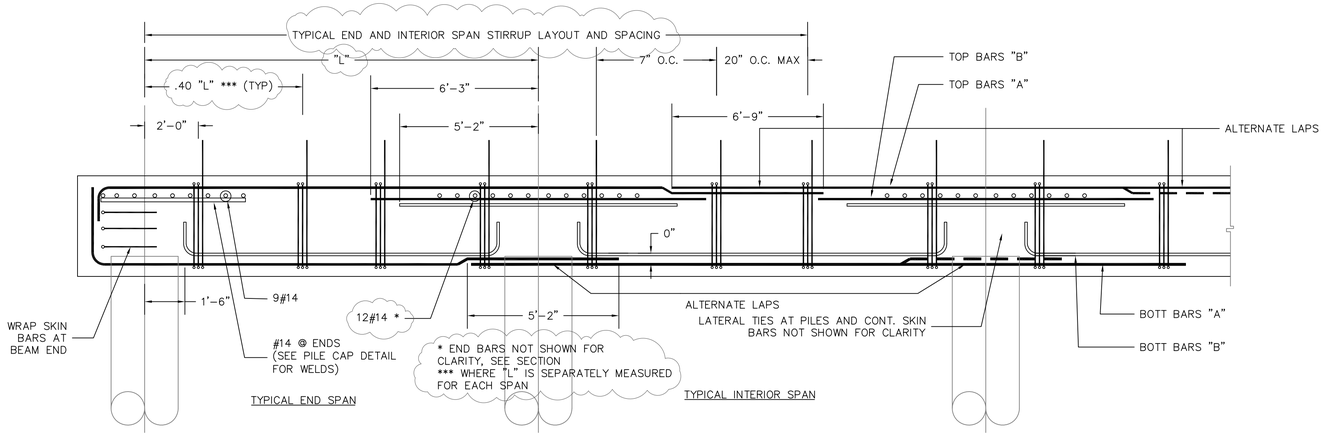

TYPICAL (B1) BEAM REINFORCEMENT GRID (1) – (48)

NOT TO SCALE

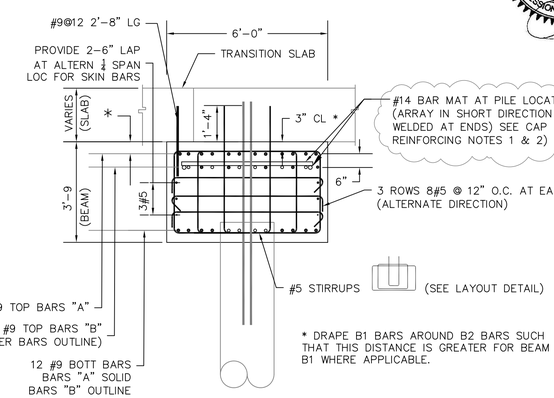

TYPICAL (B2) BEAM REINFORCEMENT GRID (1) – (48)

NOT TO SCALE

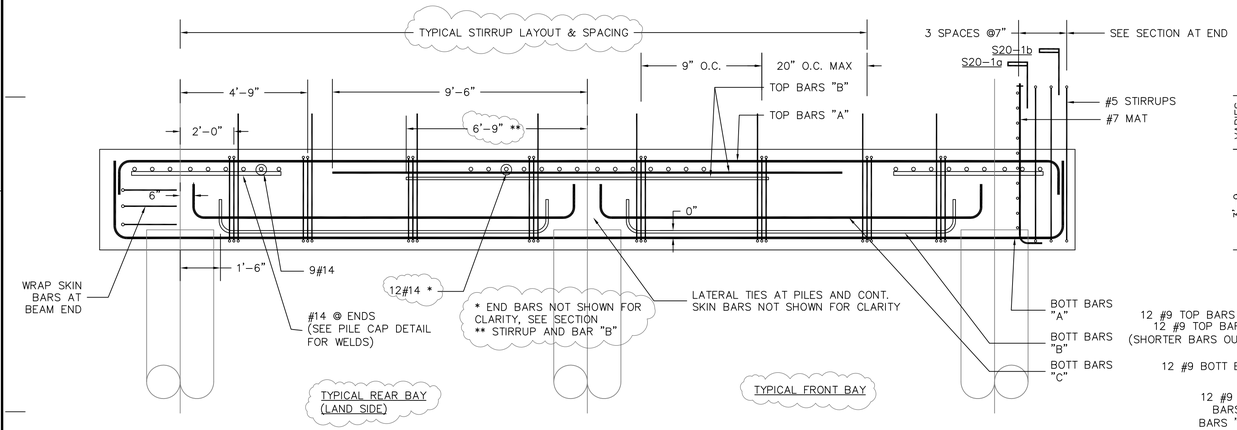

TYPICAL (B2) BEAM REINFORCEMENT GRID (1) – (48)

NOT TO SCALE

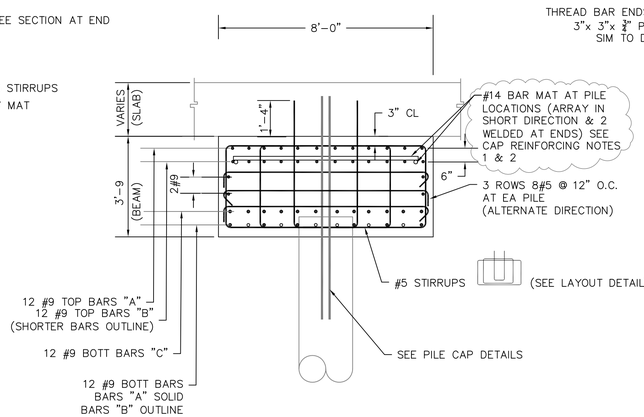

TYPICAL SECTION

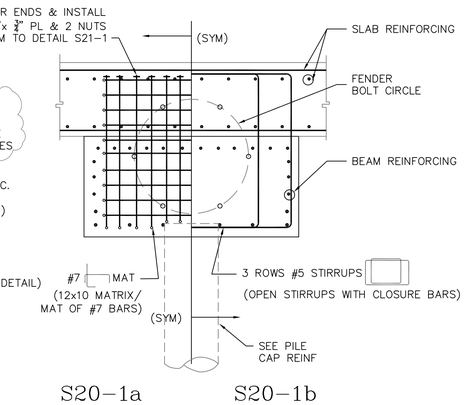

(SPLIT) SECTION AT END

APEX

ROCKVILLE, MD
SOUTH WINDSOR, CT - BOSTON, MA - NEW BEDFORD, MA - HOLYOKE, MA

184 HIGH STREET, SUITE 502
BOSTON, MA 02210

58H CONNECTICUT AVENUE
SOUTH WINDSOR, CT

This drawings prepared by Apex for this project are instruments of Apex's service for use solely with respect to this project, and Apex shall be deemed the author of the Drawing and shall retain all common law, statutory and other reserved rights with respect thereto, including the copyright. The Documents shall not be used on other projects, for additions to this project or for completion of this project by others, except by agreement in writing and with appropriate compensation to Apex.

cleengineering
15 Creek Road | Marion, Massachusetts 02738
t: 508.748.0937 | www.cleengineering.com

It is a violation of law for any person unless he is acting under the direction of a licensed professional engineer to alter this document. This drawing was prepared at the scale indicated in the title block. Inaccuracies in the stated scale may be introduced when drawings are reproduced by any means. (Use the graphic scale bar to determine the actual scale of this drawing)

PROJECT
NEW BEDFORD MARINE COMMERCE TERMINAL

OWNER
MASSACHUSETTS CLEAN ENERGY COUNCIL
55 SUMMER STREET, 9TH FLOOR
BOSTON, MASSACHUSETTS

NO.	DATE	DESCRIPTION	BY
1	1/23/13	GEN REVISIONS	JL,JD

PROJECT NO.	10068.100
CADD FILE	SoTerminal_Final-Concrete
DESIGNED BY	JDR / JL – (CLE)
DRAWN BY	JDR / JL – (CLE)
CHECKED BY	SEN / WR – (CLE)
DATE	12/23/11
DRAWING SCALE	AS NOTED

GRAPHIC SCALE
AS NOTED

SHEET TITLE
DECK REINFORCING STEEL

DRAWING NO.
S-20

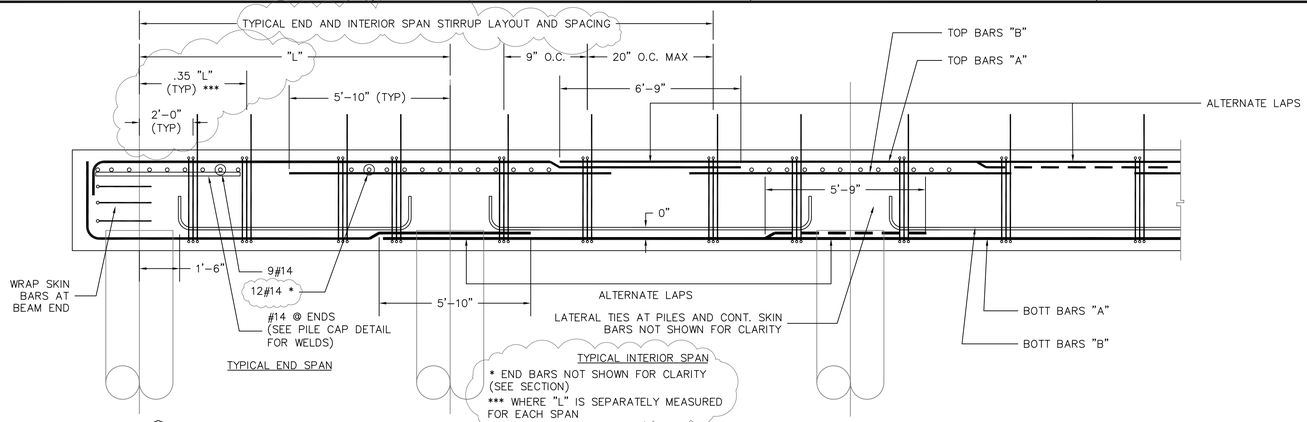

TYPICAL (B3) BEAM REINFORCEMENT GRID (49) – (62)

NOT TO SCALE

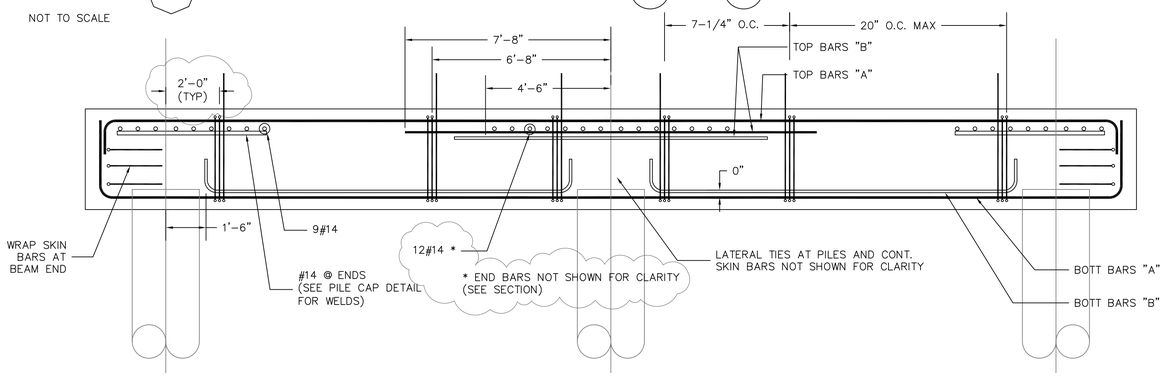

TYPICAL (B4) BEAM REINFORCEMENT GRID (63) – (65)

NOT TO SCALE

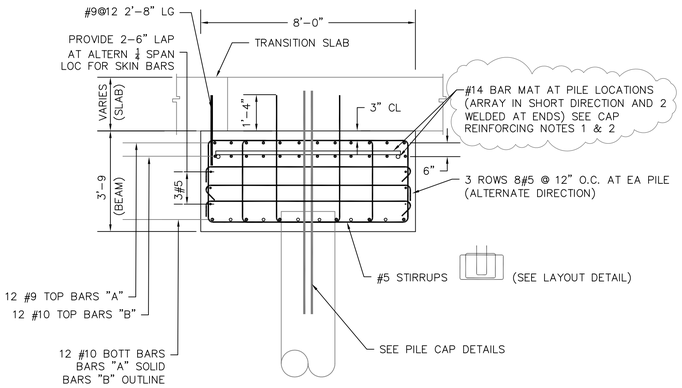

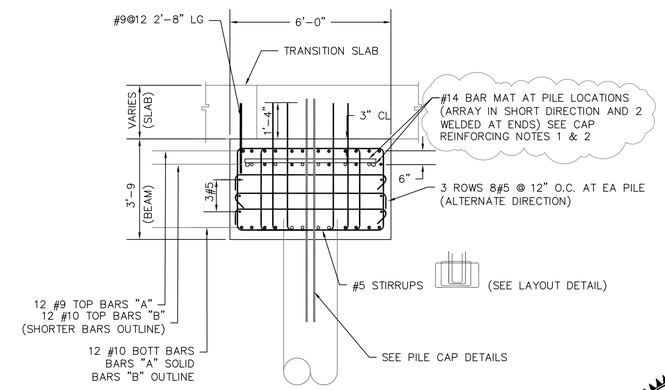

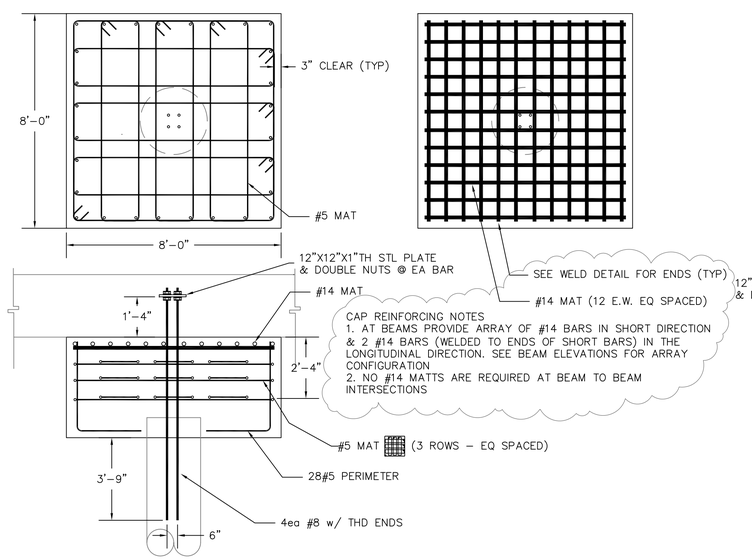

S-21-1: 8 FOOT PILE CAP

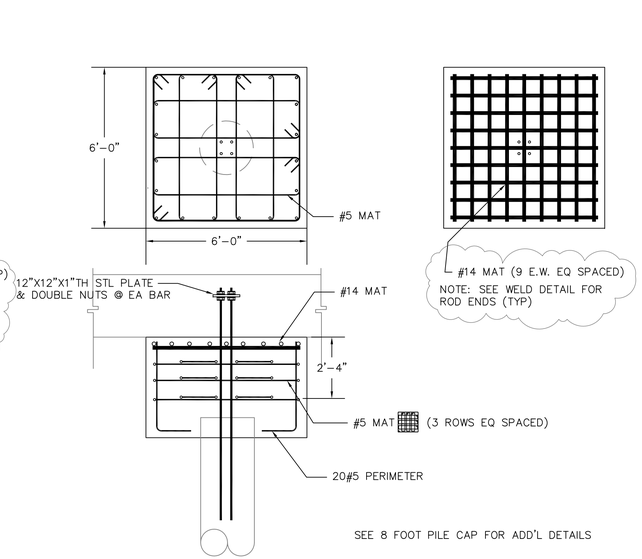

S-21-2: 6 FOOT PILE CAP

TYPICAL PILE CAP REINFORCEMENT

NOTE: PILE CAPS ARE NARROWER AT EXPANSION JOINTS. TO ACCOMMODATE THIS CONDITION THE PILE CAP AND THE REINFORCEMENT SHALL BE TRUNCATED ACCORDINGLY. CONTRACTOR TO PROVIDE SHOP DRAWINGS/DETAILED STEEL LAYOUTS MODIFIED AS REQUIRED FOR EACH CONDITION FOR APPROVAL.

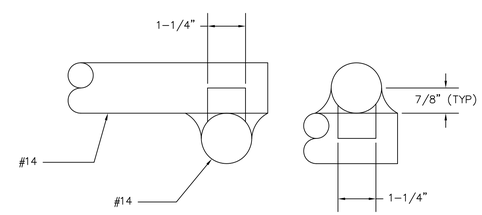

NOTES: ALL WELDING TO BE IN ACCORDANCE WITH AWS D1.4, STRUCTURAL WELDING CODE, REINFORCING STEEL WELDS TO CONFORM TO ACI Fig R11.9.6, RODS TO BE E-8018

TOP MAT WELD DETAIL

BAR SIZE	#4	#5	#6	#7	#8	#9	#10	#11
DEVELOPMENT LENGTH Ld BOTT BARS (IN)	17	21	25	37	42	48	54	60
DEVELOPMENT LENGTH Ld TOP BARS (IN)	22	28	33	48	55	62	70	78
CLASS B SPLICE BOTT BARS (IN)	22	28	33	48	55	62	70	78
CLASS B SPLICE TOP BARS (IN)	29	36	43	63	72	81	91	101

TYPICAL REINFORCEMENT LAPS
5,000 PSI CONC., GALV. BARS

APEX

ROCKVILLE, MD
SOUTH WINDSOR, CT - BOSTON, MA - NEW BEDFORD, MA - HOLYOKE, MA

184 HIGH STREET, SUITE 502
BOSTON, MA 02210

58H CONNECTICUT AVENUE
SOUTH WINDSOR, CT

This drawings prepared by Apex for this project are instruments of Apex's service for use solely with respect to this project, and Apex shall be deemed the author of the Drawing and shall retain all common law, statutory and other reserved rights with respect thereto, including the copyright. The Documents shall not be used on other projects, for additions to this project or for completion of this project by others, except by agreement in writing and with appropriate compensation to Apex.

cleengineering
15 Creek Road | Marion, Massachusetts 02738
t: 508.748.0937 | www.cleengineering.com

It is a violation of law for any person unless he is acting under the direction of a licensed professional engineer to alter this document. This drawing was prepared at the scale indicated in the title block. Inaccuracies in the stated scale may be introduced when drawings are reproduced by any means. (Use the graphic scale bar to determine the actual scale of this drawing)

PROJECT
NEW BEDFORD MARINE COMMERCE TERMINAL

OWNER
MASSACHUSETTS CLEAN ENERGY COUNCIL
55 SUMMER STREET, 9TH FLOOR
BOSTON, MASSACHUSETTS

COMMONWEALTH OF MASSACHUSETTS
JOHN A. DeRUGERIS
CIVIL
NO. 32842
REGISTERED PROFESSIONAL ENGINEER
1-23-13

NO.	DATE	DESCRIPTION	BY
1	1/23/13	GEN REVISIONS	JL,JD

PROJECT NO.	10068.100
CADD FILE	SoTerminal_Final-Concrete
DESIGNED BY	JDR / JL – (CLE)
DRAWN BY	JDR / JL – (CLE)
CHECKED BY	SEN / WR – (CLE)
DATE	12/23/11
DRAWING SCALE	AS NOTED

GRAPHIC SCALE
AS NOTED

SHEET TITLE
DECK REINFORCING DETAILS

DRAWING NO.
S-21

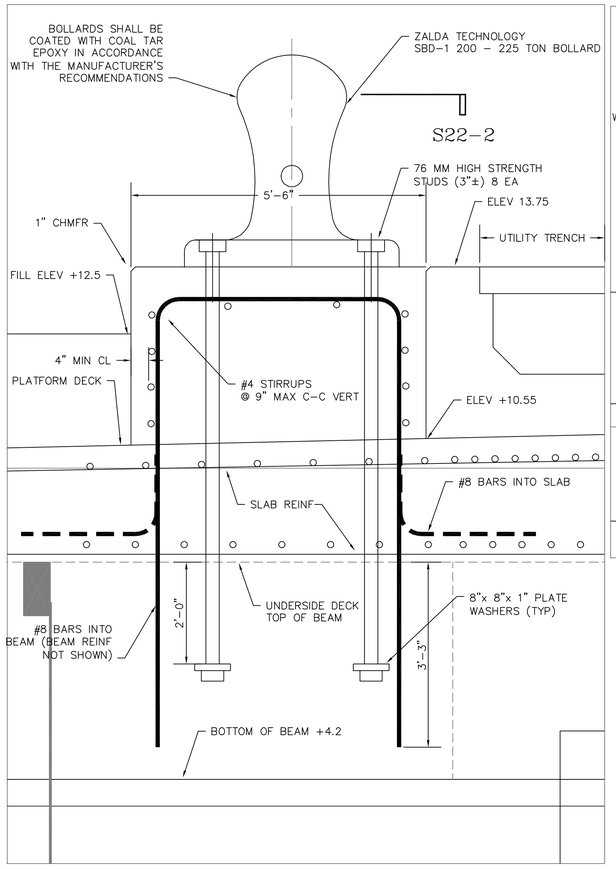

SECTION S22-1
200-225 TON BOLLARD
SCALE 3/4'= 1'-0"

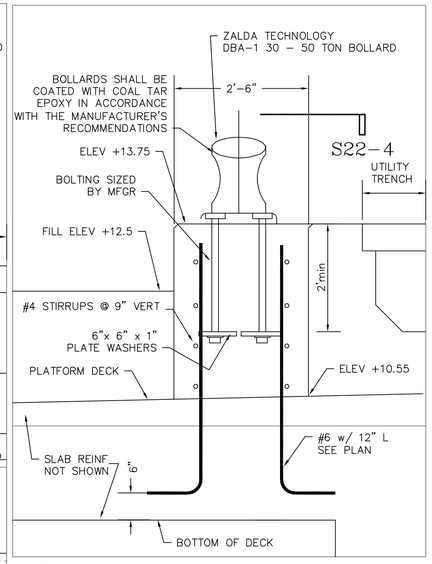

SECTION S22-4
30-50 TON BOLLARD
SCALE 3/4'= 1'-0"

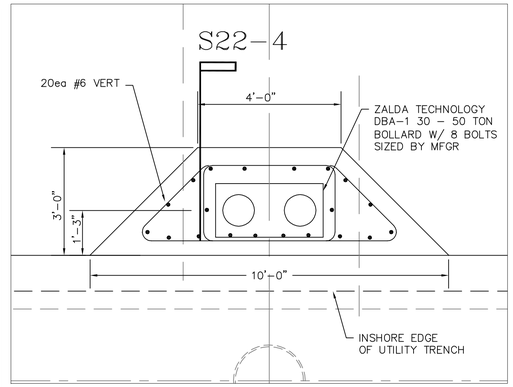

DETAIL S22-5
30-50 TON BOLLARD PAD
SCALE 1/2'= 1'-0"

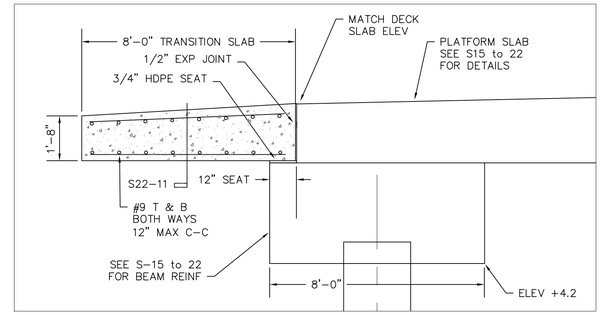

S22-8 TRANSITION SLAB
SCALE 3/8" = 1'-0"

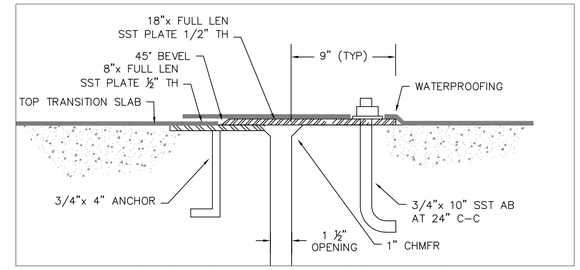

S22-11 EXP JOINT @ TRANSITION SLAB
EXTEND WATERPROOFING FROM PLATFORM
SCALE 2" = 1'-0"

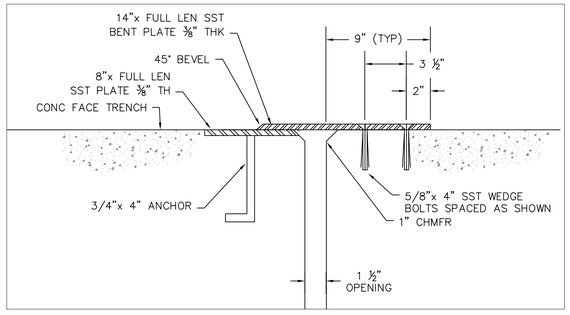

S22-10 EXP JOINT @ TRENCH WALL
FOR BURIED CONDITION EXTEND WATERPROOFING FROM S22-6 TO GRADE
SCALE 2" = 1'-0"

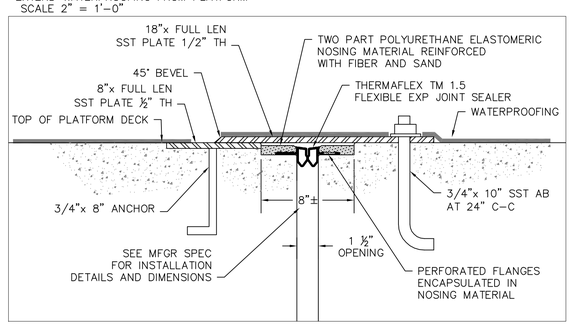

S22-6 EXPANSION JOINT & SEAL
TYPICAL ALL EXPANSION JOINTS SHOWN ON PLANS
BEFORE BACKFILL – COVER JOINT WITH 3' WIDE STRIP OF NON-WOVEN FILTER CLOTH
AND SEAL BOTH SIDES IN LONGITUDINAL DIRECTION WITH 3" WIDE STRIP OF ASHPHALTIC CEMENT
OMIT WATERPROOFING UNDER TRENCH & AT FRONT FACE OF PLATFORM, OMIT PLATES UNDER TRENCH
MAINTAIN SPACE SHOWN BETWEEN BOTTOM OF TRENCH & TOP OF SEAL
SCALE 2" = 1'-0"

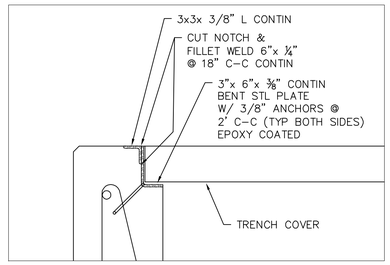

S22-9 UTILITY TRENCH ANGLE
SCALE 1" = 1'-0"

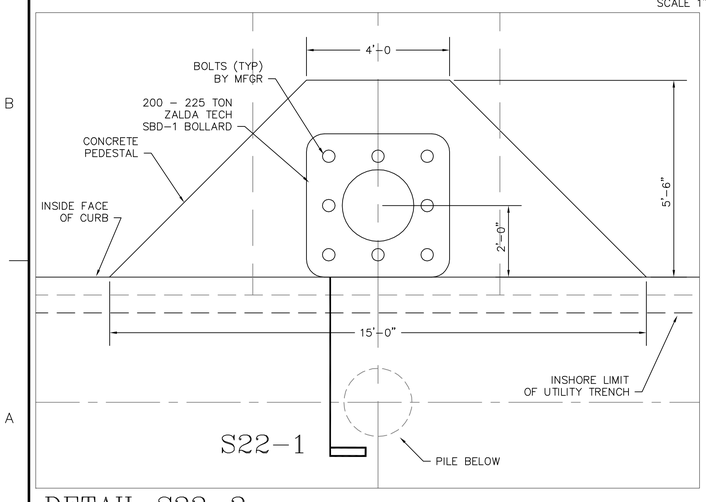

DETAIL S22-2
200-225 TON BOLLARD & PAD
SCALE 1/2'= 1'-0"

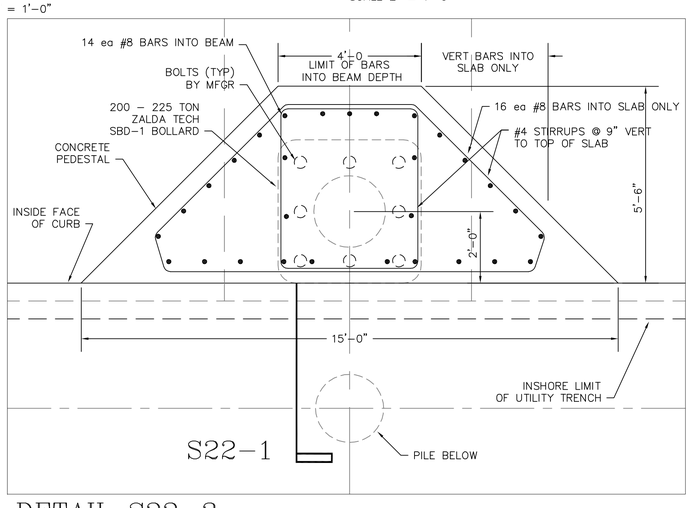

DETAIL S22-3
200-225 TON BOLLARD & PAD
SCALE 1/2'= 1'-0"

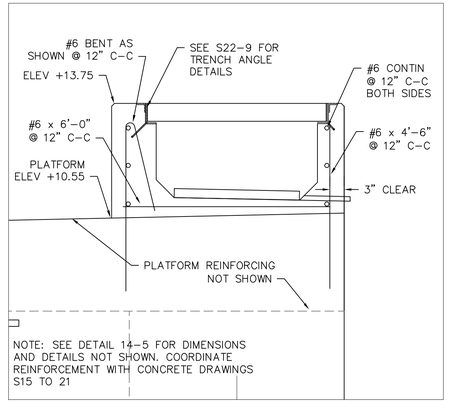

S22-7 UTILITY TRENCH REINF
SCALE 1/2" = 1'-0"

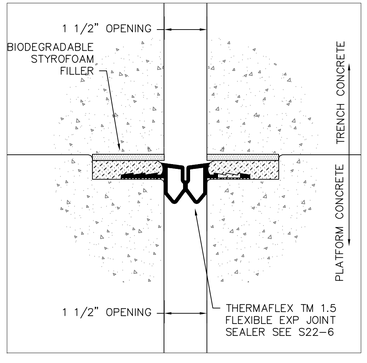

S22-12 EXP JOINT UNDER TRENCH
SCALE 4" = 1'-0"

APEX

ROCKVILLE, MD
SOUTH WINDSOR, CT - BOSTON, MA - NEW BEDFORD, MA - HOLYOKE, MA

184 HIGH STREET, SUITE 502
BOSTON, MA 02210

58H CONNECTICUT AVENUE
SOUTH WINDSOR, CT

This drawings prepared by Apex for this project are instruments of Apex's service for use solely with respect to this project, and Apex shall be deemed the author of the Drawing and shall retain all common law, statutory and other reserved rights with respect thereto, including the copyright. The Documents shall not be used on other projects, for additions to this project or for completion of this project by others, except by agreement in writing and with appropriate compensation to Apex. .

cleengineering
15 Creek Road | Marion, Massachusetts 02738
t: 508.748.0937 | www.cleengineering.com

It is a violation of law for any person unless he is acting under the direction of a licensed professional engineer to alter this document. This drawing was prepared at the scale indicated in the title block. Inaccuracies in the stated scale may be introduced when drawings are reproduced by any means. (Use the graphic scale bar to determine the actual scale of this drawing)

PROJECT
NEW BEDFORD MARINE COMMERCE TERMINAL

OWNER
MASSACHUSETTS CLEAN ENERGY COUNCIL
55 SUMMER STREET, 9TH FLOOR
BOSTON, MASSACHUSETTS

NO.	DATE	DESCRIPTION	BY

PROJECT NO.	10068.100
CADD FILE	SoTerminal_Final
DESIGNED BY	JDR / JL – (CLE)
DRAWN BY	JDR / JL – (CLE)
CHECKED BY	SEN / WR – (CLE)
DATE	12/23/11
DRAWING SCALE	AS NOTED

GRAPHIC SCALE
AS NOTED

SHEET TITLE
CONCRETE - BOLLARDS & MISC.

DRAWING NO.
S-22

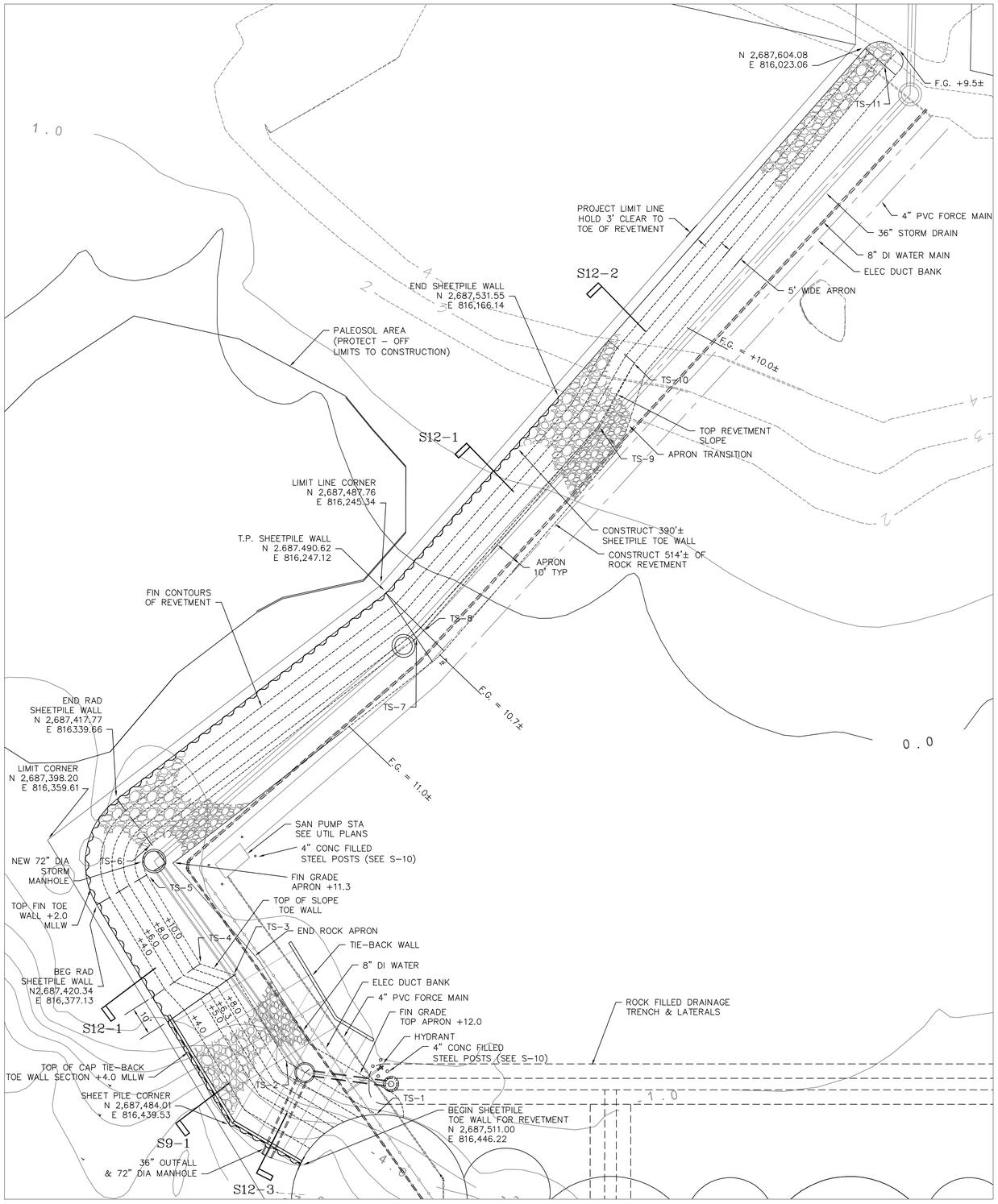

SOUTH REVETMENT LAYOUT

SCALE 1"=20'

LAYOUT COORDINATES FOR TOP OF 2:1 REVETMENT SLOPE

TS-1	E=816423.29	N=2687532.41
TS-2	E=816413.22	N=2687497.47
TS-3	E=816388.79	N=2687472.53
TS-4	E=816387.97	N=2687460.06
TS-5	E=816362.96	N=2687434.64
TS-6	E=816350.99	N=2687433.87
TS-7	E=816260.64	N=2687503.76
TS-8	E=816256.97	N=2687506.06
TS-9	E=816173.29	N=2687547.66
TS-10	E=816148.66	N=2687553.81
TS-11	E=816027.12	N=2687553.81

APEX

ROCKVILLE, MD
SOUTH WINDSOR, CT - BOSTON, MA -
NEW BEDFORD, MA - HOLYOKE, MA

184 HIGH STREET, SUITE 502
BOSTON, MA 02210

58H CONNECTICUT AVENUE
SOUTH WINDSOR, CT

This drawings prepared by Apex for this project are instruments of Apex's service for use solely with respect to this project, and Apex shall be deemed the author of the Drawing and shall retain all common law, statutory and other reserved rights with respect thereto, including the copyright. The Documents shall not be used on other projects, for additions to this project or for completion of this project by others, except by agreement in writing and with appropriate compensation to Apex. .

cleengineering
15 Creek Road | Marion, Massachusetts 02738
t: 508.748.0937 | www.cleengineering.com

It is a violation of law for any person unless he is acting under the direction of a licensed professional engineer to alter this document. This drawing was prepared at the scale indicated in the title block. Inaccuracies in the stated scale may be introduced when drawings are reproduced by any means. (Use the graphic scale bar to determine the actual scale of this drawing)

PROJECT

NEW BEDFORD
MARINE COMMERCE
TERMINAL

OWNER

MASSACHUSETTS CLEAN ENERGY COUNCIL
55 SUMMER STREET, 9TH FLOOR
BOSTON, MASSACHUSETTS

NO.	DATE	DESCRIPTION	BY
1	6/29/12	MISC. REVISIONS	SN/JD

PROJECT NO.	10068.100
CADD FILE	SoTerminal_Final
DESIGNED BY	JDR - (CLE)
DRAWN BY	JDR - (CLE)
CHECKED BY	SEN / WR - (CLE)
DATE	12/23/11
DRAWING SCALE	AS NOTED

GRAPHIC SCALE

AS NOTED

SHEET TITLE

CELL DRAINAGE &
SOUTH
REVETMENT
LAYOUTS

DRAWING NO.

S-23

COMMONWEALTH OF MASSACHUSETTS
JOHN A. DeRUGERIS
CIVIL
NO. 32842
REGISTERED PROFESSIONAL ENGINEER

6-29-12

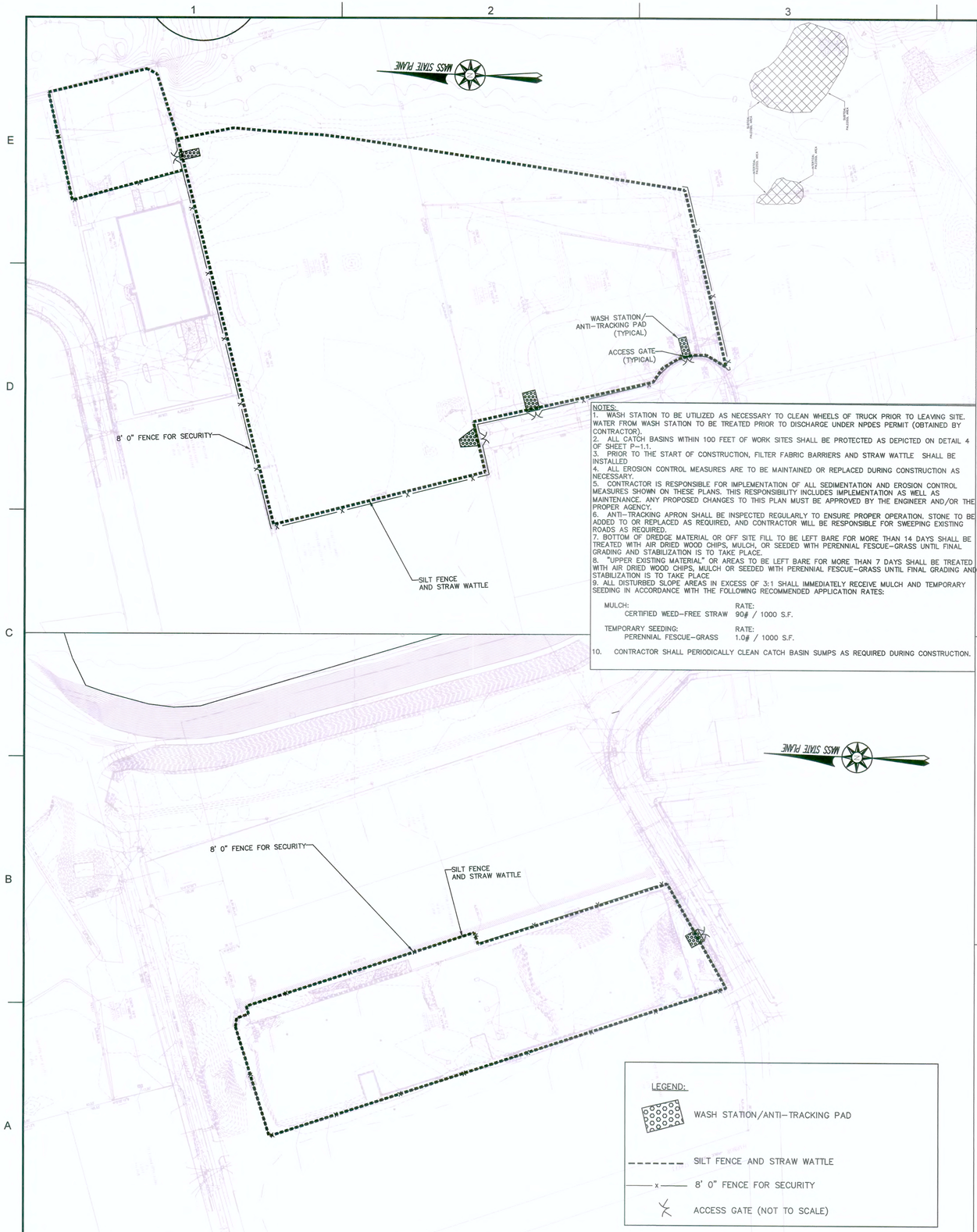

NOTES:
1. WASH STATION TO BE UTILIZED AS NECESSARY TO CLEAN WHEELS OF TRUCK PRIOR TO LEAVING SITE. WATER FROM WASH STATION TO BE TREATED PRIOR TO DISCHARGE UNDER NPDES PERMIT (OBTAINED BY CONTRACTOR).
2. ALL CATCH BASINS WITHIN 100 FEET OF WORK SITES SHALL BE PROTECTED AS DEPICTED ON DETAIL 4 OF SHEET P-1.1.
3. PRIOR TO THE START OF CONSTRUCTION, FILTER FABRIC BARRIERS AND STRAW WATTLE SHALL BE INSTALLED.
4. ALL EROSION CONTROL MEASURES ARE TO BE MAINTAINED OR REPLACED DURING CONSTRUCTION AS NECESSARY.
5. CONTRACTOR IS RESPONSIBLE FOR IMPLEMENTATION OF ALL SEDIMENTATION AND EROSION CONTROL MEASURES SHOWN ON THESE PLANS. THIS RESPONSIBILITY INCLUDES IMPLEMENTATION AS WELL AS MAINTENANCE. ANY PROPOSED CHANGES TO THIS PLAN MUST BE APPROVED BY THE ENGINEER AND/OR THE PROPER AGENCY.
6. ANTI-TRACKING APRON SHALL BE INSPECTED REGULARLY TO ENSURE PROPER OPERATION. STONE TO BE ADDED TO OR REPLACED AS REQUIRED, AND CONTRACTOR WILL BE RESPONSIBLE FOR SWEEPING EXISTING ROADS AS REQUIRED.
7. BOTTOM OF DREDGE MATERIAL OR OFF SITE FILL TO BE LEFT BARE FOR MORE THAN 14 DAYS SHALL BE TREATED WITH AIR DRIED WOOD CHIPS, MULCH, OR SEEDED WITH PERENNIAL FESCUE-GRASS UNTIL FINAL GRADING AND STABILIZATION IS TO TAKE PLACE.
8. "UPPER EXISTING MATERIAL" OR AREAS TO BE LEFT BARE FOR MORE THAN 7 DAYS SHALL BE TREATED WITH AIR DRIED WOOD CHIPS, MULCH OR SEEDED WITH PERENNIAL FESCUE-GRASS UNTIL FINAL GRADING AND STABILIZATION IS TO TAKE PLACE.
9. ALL DISTURBED SLOPE AREAS IN EXCESS OF 3:1 SHALL IMMEDIATELY RECEIVE MULCH AND TEMPORARY SEEDING IN ACCORDANCE WITH THE FOLLOWING RECOMMENDED APPLICATION RATES:

MULCH:	RATE:
CERTIFIED WEED-FREE STRAW	90# / 1000 S.F.
TEMPORARY SEEDING:	**RATE:**
PERENNIAL FESCUE-GRASS	1.0# / 1000 S.F.

10. CONTRACTOR SHALL PERIODICALLY CLEAN CATCH BASIN SUMPS AS REQUIRED DURING CONSTRUCTION.

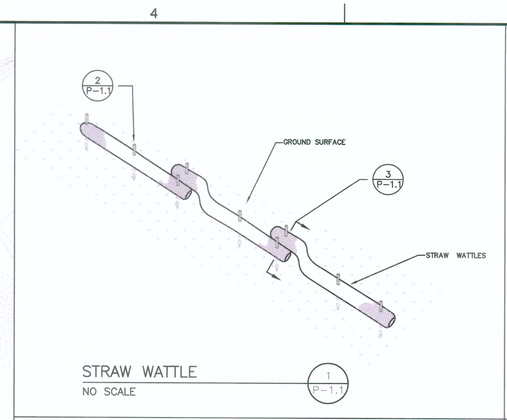

STRAW WATTLE (1 / P-1.1)
NO SCALE

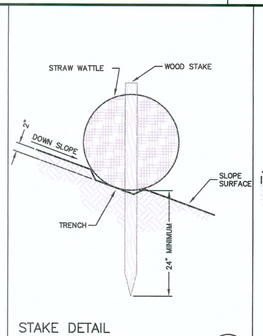

STAKE DETAIL ON BARE SOIL (2 / P-1.1)
NO SCALE

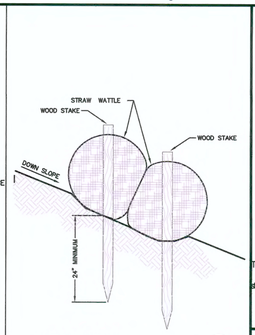

STAKE DETAIL (3 / P-1.1)
NO SCALE
SECTION VIEW

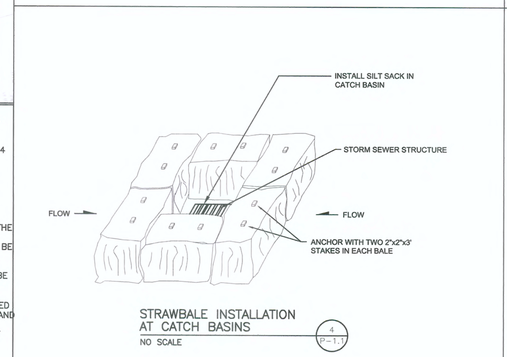

STRAWBALE INSTALLATION AT CATCH BASINS (4 / P-1.1)
NO SCALE

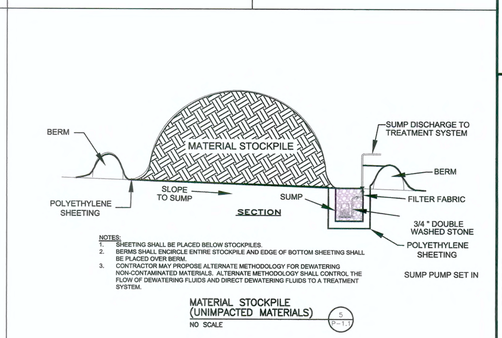

NOTES:
1. SHEETING SHALL BE PLACED BELOW STOCKPILES.
2. BERMS SHALL ENCIRCLE ENTIRE STOCKPILE AND EDGE OF BOTTOM SHEETING SHALL BE PLACED OVER BERM.
3. CONTRACTOR MAY PROPOSE ALTERNATE METHODOLOGY FOR DEWATERING NON-CONTAMINATED MATERIALS. ALTERNATE METHODOLOGY SHALL CONTROL THE FLOW OF DEWATERING FLUIDS AND DIRECT DEWATERING FLUIDS TO A TREATMENT SYSTEM.

MATERIAL STOCKPILE (UNIMPACTED MATERIALS) (5 / P-1.1)
NO SCALE

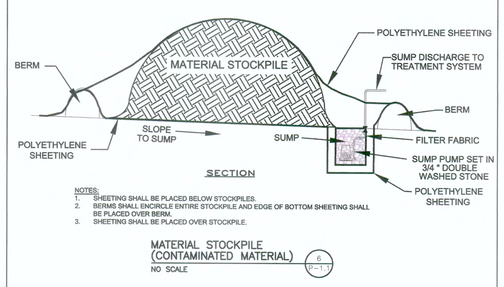

NOTES:
1. SHEETING SHALL BE PLACED BELOW STOCKPILES.
2. BERMS SHALL ENCIRCLE ENTIRE STOCKPILE AND EDGE OF BOTTOM SHEETING SHALL BE PLACED OVER BERM.
3. SHEETING SHALL BE PLACED OVER STOCKPILE.

MATERIAL STOCKPILE (CONTAMINATED MATERIAL) (6 / P-1.1)
NO SCALE

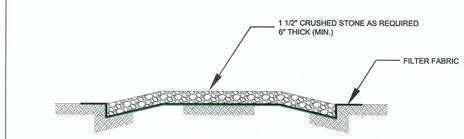

NOTES:
1. ANTI-TRACKING PAD TO BE REMOVED BY THE CONTRACTOR AFTER THE COMPLETION OF CONSTRUCTION (SEE SPECIFICATIONS FOR DETAILS).
2. FILTER FABRIC SHALL BE INSTALLED BELOW ANTI-TRACKING PAD.

ANTI-TRACKING PAD (SECTION) (7 / P-1.1)
NO SCALE

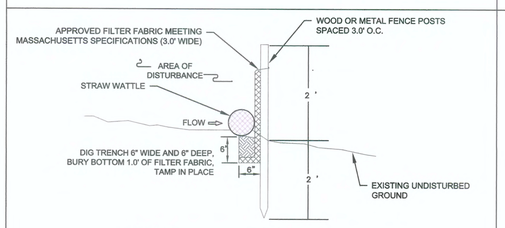

NOTES:
1. SILT FENCING SHALL BE PLACED AS SHOWN ON PROJECT DRAWINGS.
2. BOTTOM 1 FOOT OF SILT FENCING SHALL BE BURIED IN 6" X 6" TRENCH DUG AT BASE OF FENCING.
3. SILT FENCING SHALL BE ANCHORED IN PLACE WITH WOODEN OR METAL FENCE POSTS SPACED AT 3 FT. O.C.
4. INSPECTION SHALL BE FREQUENT AND REPAIR REPLACEMENT SHALL BE PROMPT (WHEN NEEDED).
5. SILT FENCING SHALL BE REMOVED WHEN IT HAS SERVED ITS USEFULNESS.
6. SILT FENCING TO BE PLACED DOWN-GRADIENT OF HAY BALES.

SILT FENCE (SECTION) (8 / P-1.1)
NO SCALE

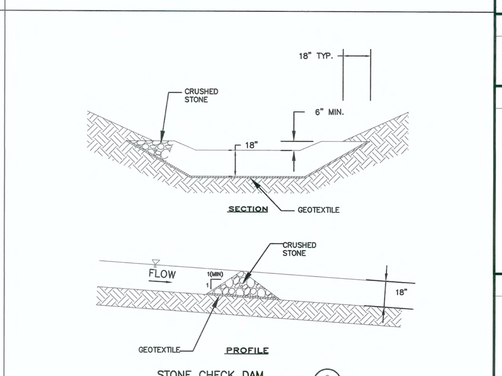

STONE CHECK DAM (9 / P-1.1)
NO SCALE

APEX

ROCKVILLE, MD
SOUTH WINDSOR, CT - BOSTON, MA - NEW BEDFORD, MA - HOLYOKE, MA

184 HIGH STREET, SUITE 502
BOSTON, MA 02210

58H CONNECTICUT AVENUE
SOUTH WINDSOR, CT

This drawings prepared by Apex for this project are instruments of Apex's service for use solely with respect to this project, and Apex shall be deemed the author of the Drawing and shall retain all common law, statutory and other reserved rights with respect thereto, including the copyright. The Documents shall not be used on other projects, for additions to this project or for completion of the project by others, except by agreement in writing and with appropriate compensation to Apex.

COMMONWEALTH OF MASSACHUSETTS
CHESTER H. MYERS
ENVIRONMENTAL
NO. 45554
07/30/12
REGISTERED PROFESSIONAL ENGINEER

PROJECT
NEW BEDFORD MARINE COMMERCE TERMINAL

OWNER
MASSACHUSETTS CLEAN ENERGY CENTER
55 SUMMER STREET, 9TH FLOOR
BOSTON, MASSACHUSETTS

NO.	DATE	DESCRIPTION	BY
1.	6/28/12	E.S.C. UPDATE	CWM

PROJECT NO.	6690
CADD FILE	
DESIGNED BY	GCD
DRAWN BY	GCD
CHECKED BY	CMM
DATE	08/04/2011
DRAWING SCALE	1"=100'

GRAPHIC SCALE
SCALE: 1"=100'
0 50 100 150

SHEET TITLE
EROSION AND SEDIMENTATION CONTROLS PLAN

DRAWING NO.
P-1.1

NOTES:
1. AREA 1 AND AREA 2 PRIMARY CONTAMINANT IS PCBS; REFER TO DATA REPORT – NEW BEDFORD MARINE COMMERCE TERMINAL FOR ANALYTICAL DATA. MAXIMUM PCB CONCENTRATION DETECTED IN AREA 1 IS 989 mg/KG AND IN AREA 2 IS 75 mg/KG.
2. AREA 3 PRIMARY CONTAMINANT IS EPH/TPH; REFFER TO DATA REPORT – NEW BEDFORD MARINE COMMERCE TERMINAL FOR ANALYTICAL DATA. MAXIMUM CONCENTRATION OF C11–C22 AROMATICS (ADJUSTED) IN AREA 3 IS 17,800 mg/KG.

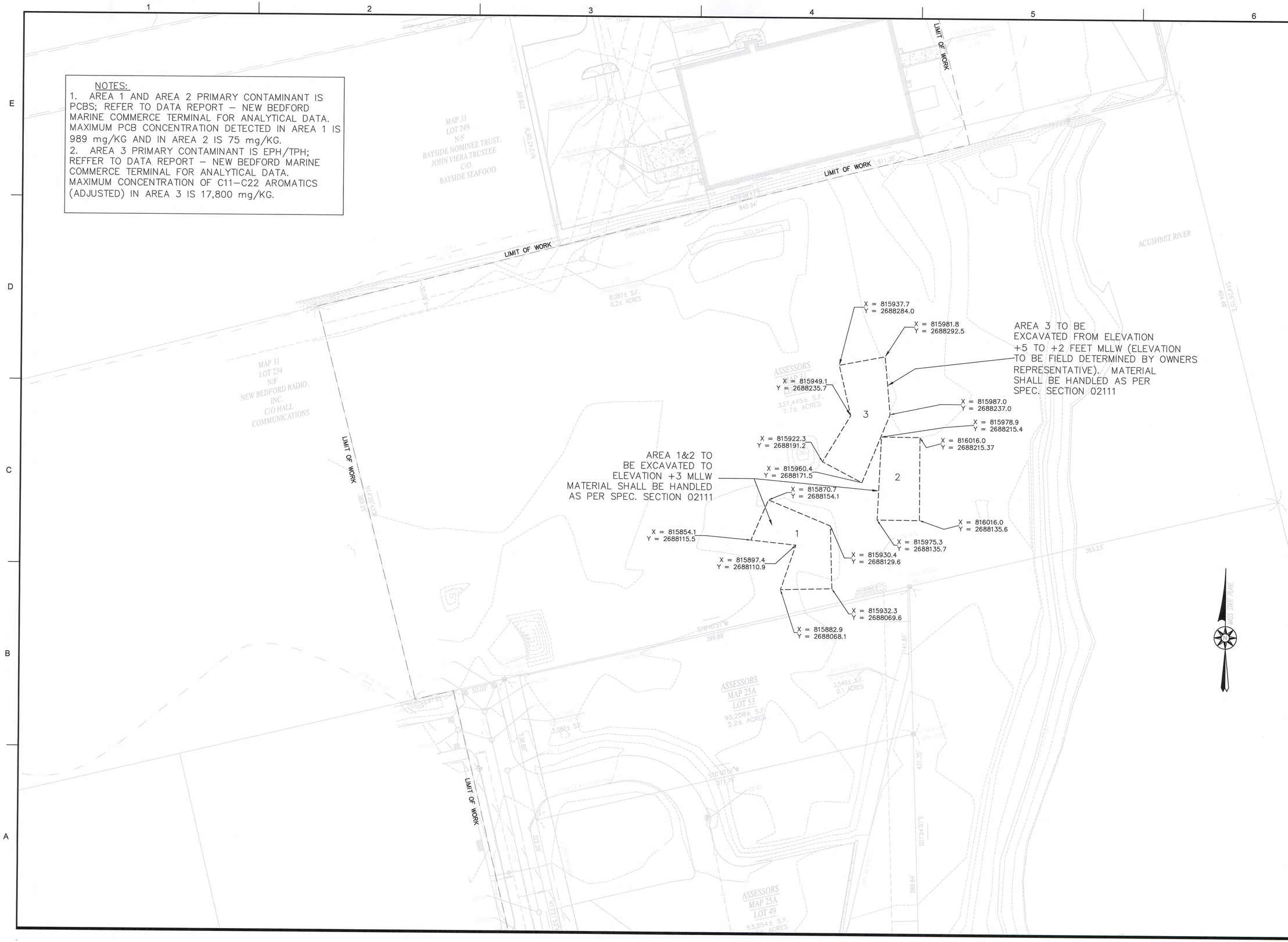

APEX

ROCKVILLE, MD
SOUTH WINDSOR, CT - BOSTON, MA - NEW BEDFORD, MA - HOLYOKE, MA

184 HIGH STREET, SUITE 502
BOSTON, MA 02210

58H CONNECTICUT AVENUE
SOUTH WINDSOR, CT

This drawings prepared by Apex for this project are instruments of Apex's service for use solely with respect to this project, and Apex shall be deemed the author of the Drawing and shall retain all common law, statutory and other reserved rights with respect thereto, including the copyright. The Documents shall not be used on other projects, for additions to this project or for completion of this project by others, except by agreement in writing and with appropriate compensation to Apex..

COMMONWEALTH OF MASSACHUSETTS
CHESTER H. HYDE, JR.
ENVIRONMENTAL
NO. 45654
REGISTERED PROFESSIONAL ENGINEER
9/1/12

PROJECT
NEW BEDFORD MARINE COMMERCE TERMINAL

OWNER
MASSACHUSETTS CLEAN ENERGY CENTER
55 SUMMER STREET, 9TH FLOOR
BOSTON, MASSACHUSETTS

NO.	DATE	DESCRIPTION	BY
2.	6–28–12	L.O.W. UPDATE	CWM
1.	12–23–11	FOR CONSTRUCTION	CWM

PROJECT NO.	6690
CADD FILE	P-1.2 REM. EXC
DESIGNED BY	CHM
DRAWN BY	CWM
CHECKED BY	CHM
DATE	8-29-11
DRAWING SCALE	1"=40'

GRAPHIC SCALE
SCALE: 1"=40'
0 20 40 80

SHEET TITLE
REMEDIAL EXCAVATION PLAN

DRAWING NO.
P-1.2

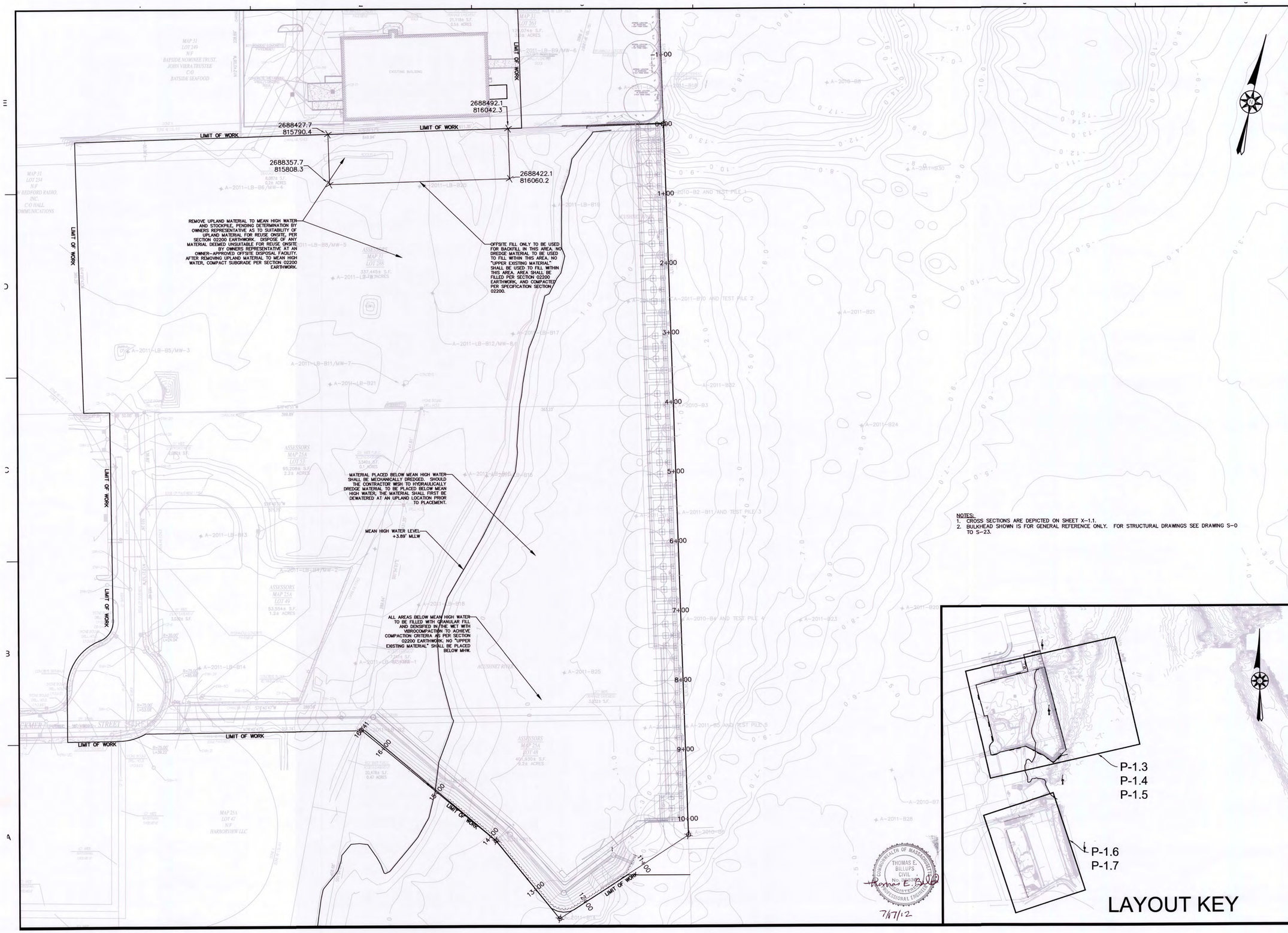

NOTES:
1. CROSS SECTIONS ARE DEPICTED ON SHEET X-1.1.
2. BULKHEAD SHOWN IS FOR GENERAL REFERENCE ONLY. FOR STRUCTURAL DRAWINGS SEE DRAWING S-0 TO S-23.

COMMONWEALTH OF MASSACHUSETTS
THOMAS E. BILLUPS
CIVIL
No. 43390
REGISTERED PROFESSIONAL ENGINEER
7/17/12

LAYOUT KEY

APEX
ROCKVILLE, MD
SOUTH WINDSOR, CT - BOSTON, MA - NEW BEDFORD, MA - HOLYOKE, MA

184 HIGH STREET, SUITE 502
BOSTON, MA 02210

58H CONNECTICUT AVENUE
SOUTH WINDSOR, CT

THIS DRAWINGS PREPARED BY APEX FOR THIS PROJECT ARE INSTRUMENTS OF APEX'S SERVICE FOR USE SOLELY WITH RESPECT TO THIS PROJECT, AND APEX SHALL BE DEEMED THE AUTHOR OF THE DRAWING AND SHALL RETAIN ALL COMMON LAW, STATUTORY AND OTHER RESERVED RIGHTS WITH RESPECT THERETO, INCLUDING THE COPYRIGHT. THE DOCUMENTS SHALL NOT BE USED ON OTHER PROJECTS, FOR ADDITIONS TO THIS PROJECT OR FOR COMPLETION OF THIS PROJECT BY OTHERS, EXCEPT BY AGREEMENT IN WRITING AND WITH APPROPRIATE COMPENSATION TO APEX.

GZA
GeoEnvironmental, Inc.
Engineers and Scientists
530 Broadway
Providence, RI 02909
(401) 421-4140

PROJECT
NEW BEDFORD MARINE COMMERCE TERMINAL

OWNER
MASSACHUSETTS CLEAN ENERGY CENTER
55 SUMMER STREET, 9TH FLOOR
BOSTON, MA

NO.	DATE	DESCRIPTION	BY
2.	3/16/12	MHW FILL ADJUSTED	CWM
1.	12/23/11	FOR CONSTRUCTION	TEB

PROJECT NO.	6690
CADD FILE	UPLAND_GRADING
DESIGNED BY	CWM
DRAWN BY	CWM
CHECKED BY	CHM
DATE	8-8-11
DRAWING SCALE	1"=60'

GRAPHIC SCALE
SCALE: 1"=60'
0 30 60 120

SHEET TITLE
FILL BELOW MEAN HIGH WATER PLAN

DRAWING NO.
P-1.3

P:\Jobs\6690 NBH_ Phase IV\PLANS\FINAL_PLANS\100% Submittal\P-1.3-P-1.7_X-1.1_X-1.2UPLAND_GRADING.dwg

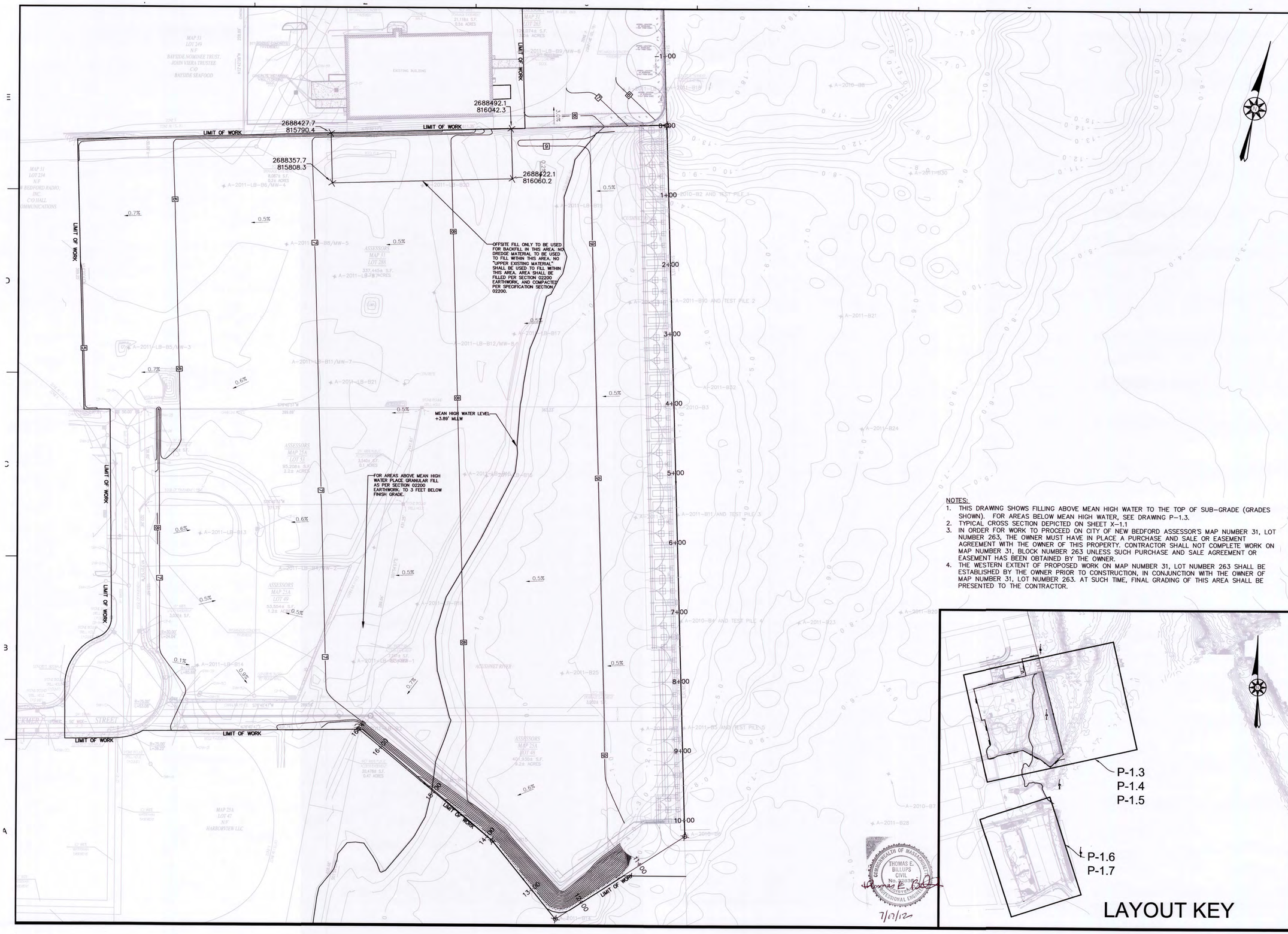

NOTES:

1. THIS DRAWING SHOWS FILLING ABOVE MEAN HIGH WATER TO THE TOP OF SUB-GRADE (GRADES SHOWN). FOR AREAS BELOW MEAN HIGH WATER, SEE DRAWING P-1.3.
2. TYPICAL CROSS SECTION DEPICTED ON SHEET X-1.1
3. IN ORDER FOR WORK TO PROCEED ON CITY OF NEW BEDFORD ASSESSOR'S MAP NUMBER 31, LOT NUMBER 263, THE OWNER MUST HAVE IN PLACE A PURCHASE AND SALE OR EASEMENT AGREEMENT WITH THE OWNER OF THIS PROPERTY. CONTRACTOR SHALL NOT COMPLETE WORK ON MAP NUMBER 31, BLOCK NUMBER 263 UNLESS SUCH PURCHASE AND SALE AGREEMENT OR EASEMENT HAS BEEN OBTAINED BY THE OWNER.
4. THE WESTERN EXTENT OF PROPOSED WORK ON MAP NUMBER 31, LOT NUMBER 263 SHALL BE ESTABLISHED BY THE OWNER PRIOR TO CONSTRUCTION, IN CONJUNCTION WITH THE OWNER OF MAP NUMBER 31, LOT NUMBER 263. AT SUCH TIME, FINAL GRADING OF THIS AREA SHALL BE PRESENTED TO THE CONTRACTOR.

COMMONWEALTH OF MASSACHUSETTS
THOMAS E. BILLUPS
CIVIL
No. 28386
REGISTERED PROFESSIONAL ENGINEER
7/17/12

LAYOUT KEY

APEX
ROCKVILLE, MD
SOUTH WINDSOR, CT - BOSTON, MA - NEW BEDFORD, MA - HOLYOKE, MA

184 HIGH STREET, SUITE 502
BOSTON, MA 02210

58H CONNECTICUT AVENUE
SOUTH WINDSOR, CT

THIS DRAWINGS PREPARED BY APEX FOR THIS PROJECT ARE INSTRUMENTS OF APEX'S SERVICE FOR USE SOLELY WITH RESPECT TO THIS PROJECT, AND APEX SHALL BE DEEMED THE AUTHOR OF THE DRAWING AND SHALL RETAIN ALL COMMON LAW, STATUTORY AND OTHER RESERVED RIGHTS WITH RESPECT THERETO, INCLUDING THE COPYRIGHT. THE DOCUMENTS SHALL NOT BE USED ON OTHER PROJECTS, FOR ADDITIONS TO THIS PROJECT OR FOR COMPLETION OF THIS PROJECT BY OTHERS, EXCEPT BY AGREEMENT IN WRITING AND WITH APPROPRIATE COMPENSATION TO APEX.

GZA
GeoEnvironmental, Inc.
Engineers and Scientists
530 Broadway
Providence, RI 02909
(401) 421-4140

PROJECT
NEW BEDFORD MARINE COMMERCE TERMINAL

OWNER
MASSACHUSETTS CLEAN ENERGY CENTER
55 SUMMER STREET, 9TH FLOOR BOSTON, MA

NO.	DATE	DESCRIPTION	BY
2.	3/21/12	SUBGRADE MODIFIED	CWM
1.	12/23/11	FOR CONSTRUCTION	TEB

PROJECT NO.	6690
CADD FILE	UPLAND_GRADING
DESIGNED BY	CWM
DRAWN BY	CWM
CHECKED BY	CHM
DATE	8-8-11
DRAWING SCALE	1"=60'

GRAPHIC SCALE
SCALE: 1"=60'
0 30 60 120

SHEET TITLE
SUB-GRADE GRADING PLAN

DRAWING NO.
P-1.4

P:\Jobs\6690 NBH_ Phase IV\PLANS\FINAL_PLANS\100% Submittal\P-1.3-P-1.7_X-1.1_X-1.2UPLAND_GRADING.dwg

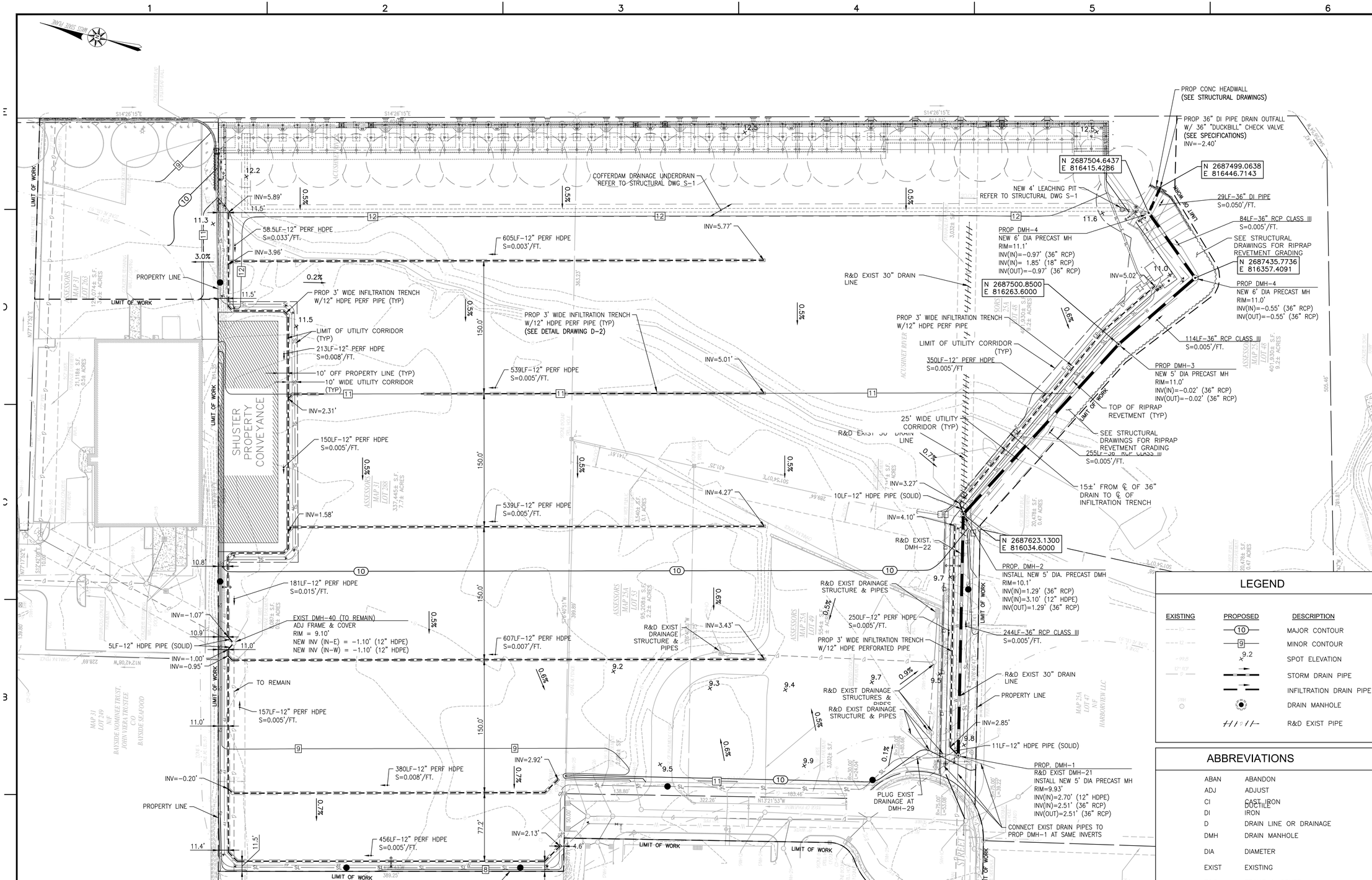

GRADING AND DRAINAGE NOTES:

1. ALL EXISTING DRAIN MANHOLE STRUCTURES SHALL BE CORED PRIOR TO MAKING NEW PIPE CONNECTIONS.
2. ALL PIPE CONNECTIONS TO NEW AND EXISTING DRAIN MANHOLE STRUCTURES WILL BE MADE USING A FLEXIBLE COUPLING.
3. FOR LOCATION OF UNDERGROUND UTILITIES, REFER TO UTILITY DWG U-1.
4. FOR DRAINAGE DETAILS, REFER TO DWGS D-1 THRU D-3
5. FOR FACILITY CROSS-SECTION, REFER TO DWG X-1.1
6. FOR ELECTRICAL DETAILS, REFER TO ELECTRICAL DWGS

LEGEND

EXISTING	PROPOSED	DESCRIPTION
	10	MAJOR CONTOUR
	9	MINOR CONTOUR
	9.2	SPOT ELEVATION
		STORM DRAIN PIPE
		INFILTRATION DRAIN PIPE
		DRAIN MANHOLE
		R&D EXIST PIPE

ABBREVIATIONS

ABAN	ABANDON
ADJ	ADJUST
CI	CAST IRON
DI	DUCTILE IRON
D	DRAIN LINE OR DRAINAGE
DMH	DRAIN MANHOLE
DIA	DIAMETER
EXIST	EXISTING
F&C	FRAME & COVER
HDPE	HIGH DENSITY POLYETHYLENE PIPE
INV	INVERT
LF	LINEAR FEET
PERF	PERFORATED
PROP	PROPOSED
R&D	REMOVE AND DISPOSE
TYP	TYPICAL

COMMONWEALTH OF MASSACHUSETTS
JAMES A. JACKSON, JR.
CIVIL
No. 42563
REGISTERED PROFESSIONAL ENGINEER

APEX

ROCKVILLE, MD
SOUTH WINDSOR, CT - BOSTON, MA - NEW BEDFORD, MA - HOLYOKE, MA

184 HIGH STREET, SUITE 502
BOSTON, MA 02210

58H CONNECTICUT AVENUE
SOUTH WINDSOR, CT

This drawings prepared by Apex for this project are instruments of Apex's service for use solely with respect to this project, and Apex shall be deemed the author of the Drawing and shall retain all common law, statutory and other reserved rights with respect thereto, including the copyright. The Documents shall not be used on other projects, for additions to this project or for completion of this project by others, except by agreement in writing and with appropriate compensation to Apex.

Maguire Group Inc.
Architects / Engineers / Planners
225 Chapman Street, 4th Floor
Providence,Rhode Island 02905
401-272-6000
www.maguiregroup.com

PROJECT
NEW BEDFORD MARINE COMMERCE TERMINAL

OWNER
MASSACHUSETTS CLEAN ENERGY CENTER
55 SUMMER STREET, 9TH FLOOR
BOSTON, MASSACHUSETTS

NO.	DATE	DESCRIPTION	BY
1	4/01/13	FOR CONSTRUCTION	JAJ

PROJECT NO.	6690
CADD FILE	
DESIGNED BY	JTS
DRAWN BY	JTS
CHECKED BY	JAJ
DATE	4/01/13
DRAWING SCALE	1"=50'

GRAPHIC SCALE
SCALE: 1"=50'
0 25 50 100

SHEET TITLE

GRADING AND DRAINAGE PLAN

DRAWING NO.

P-1.5

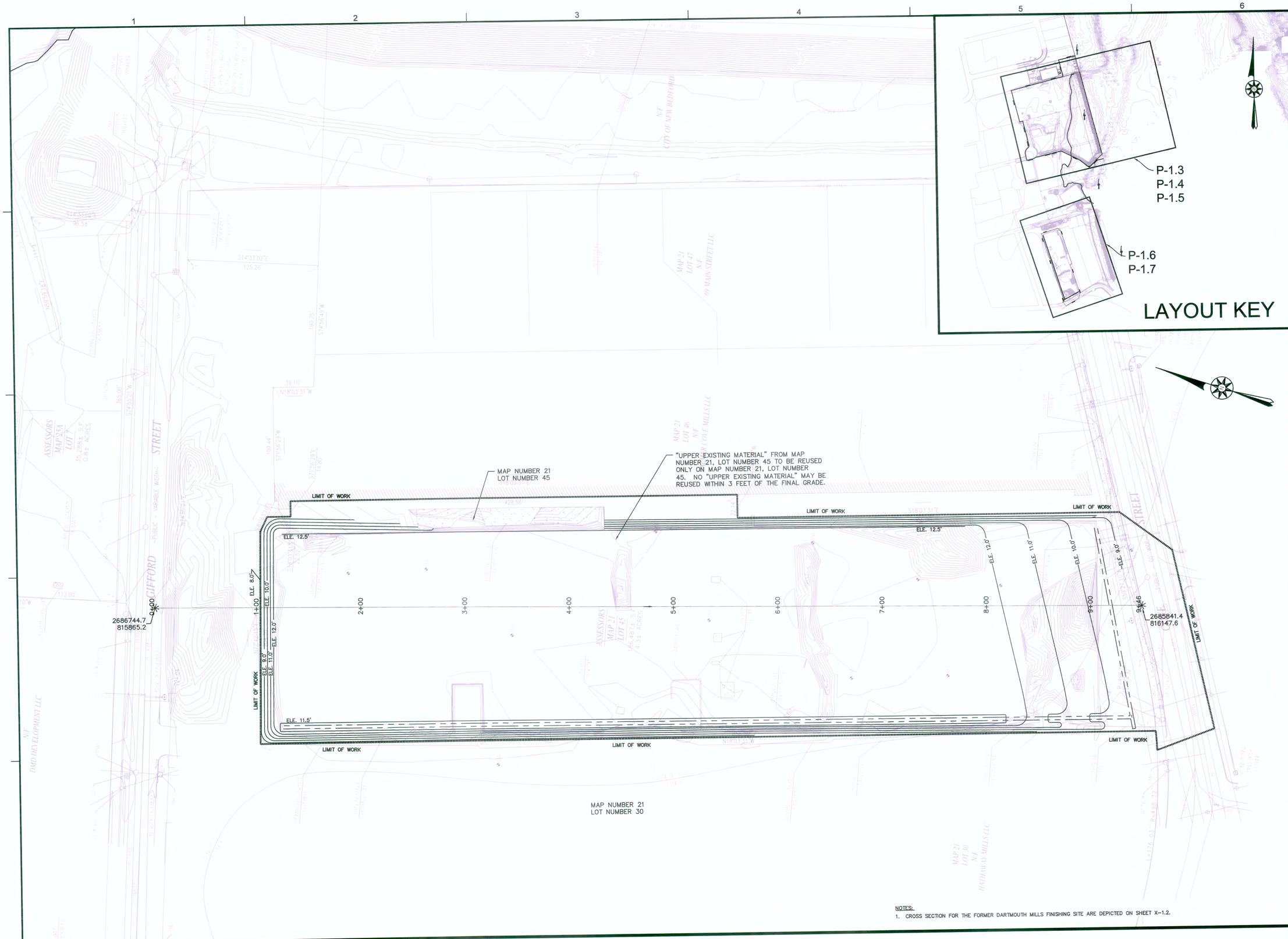

NOTES:

1. CROSS SECTION FOR THE FORMER DARTMOUTH MILLS FINISHING SITE ARE DEPICTED ON SHEET X-1.2.

APEX

ROCKVILLE, MD
SOUTH WINDSOR, CT - BOSTON, MA - NEW BEDFORD, MA - HOLYOKE, MA

184 HIGH STREET, SUITE 502
BOSTON, MA 02210

58H CONNECTICUT AVENUE
SOUTH WINDSOR, CT

THIS DRAWINGS PREPARED BY APEX FOR THIS PROJECT ARE INSTRUMENTS OF APEX'S SERVICE FOR USE SOLELY WITH RESPECT TO THIS PROJECT, AND APEX SHALL BE DEEMED THE AUTHOR OF THE DRAWING AND SHALL RETAIN ALL COMMON LAW, STATUTORY AND OTHER RESERVED RIGHTS WITH RESPECT THERETO, INCLUDING THE COPYRIGHT. THE DOCUMENTS SHALL NOT BE USED ON OTHER PROJECTS, FOR ADDITIONS TO THIS PROJECT OR FOR COMPLETION OF THIS PROJECT BY OTHERS, EXCEPT BY AGREEMENT IN WRITING AND WITH APPROPRIATE COMPENSATION TO APEX.

COMMONWEALTH OF MASSACHUSETTS
CHESTER H. MYERS
ENVIRONMENTAL
NO. 45654
12/23/11
REGISTERED PROFESSIONAL ENGINEER

PROJECT
NEW BEDFORD MARINE COMMERCE TERMINAL

OWNER
MASSACHUSETTS CLEAN ENERGY CENTER
55 SUMMER STREET, 9TH FLOOR
BOSTON, MA

NO.	DATE	DESCRIPTION	BY
1.	12/23/11	FOR CONSTRUCTION	TEB

PROJECT NO.	6690
CADD FILE	UPLAND_GRADING
DESIGNED BY	CWM
DRAWN BY	CWM
CHECKED BY	CHM
DATE	8-8-11
DRAWING SCALE	1"=40'

GRAPHIC SCALE
SCALE: 1"=40'
0 20 40 80

SHEET TITLE
FORMER DARTMOUTH FINISHING SITE SUB-GRADE GRADING PLAN

DRAWING NO.
P-1.6

1"=1'-0"

P:\Jobs\6690 NBH_ Phase IV\PLANS\FINAL_PLANS\100% Submittal\DRAINAGE SWALE\P-1.3-P-1.7_X-1.1_X-1.2UPLAND_GRADING.dwg

NOTES:
1. CROSS SECTION FOR THE FORMER DARTMOUTH MILLS FINISHING SITE ARE DEPICTED ON SHEET X-1.2.

2:1 SLOPE DETAIL
FORMER DARTMOUTH FINISHING SITE
NOT TO SCALE

INFILTRATION TRENCH DETAIL
FORMER DARTMOUTH FINISHING SITE
NOT TO SCALE

LAYOUT KEY

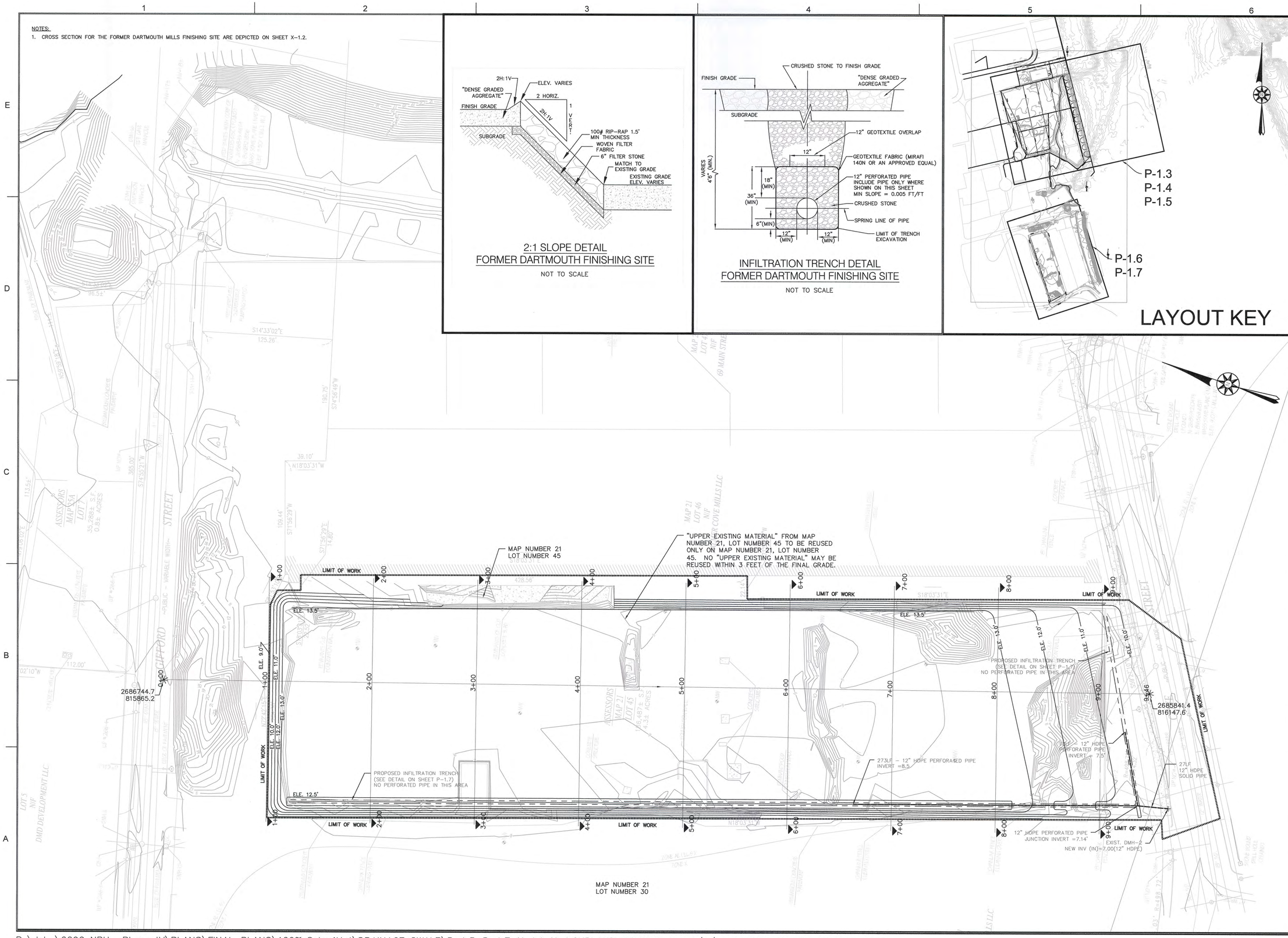

APEX

ROCKVILLE, MD
SOUTH WINDSOR, CT - BOSTON, MA - NEW BEDFORD, MA - HOLYOKE, MA

184 HIGH STREET, SUITE 502
BOSTON, MA 02210

58H CONNECTICUT AVENUE
SOUTH WINDSOR, CT

THIS DRAWINGS PREPARED BY APEX FOR THIS PROJECT ARE INSTRUMENTS OF APEX'S SERVICE FOR USE SOLELY WITH RESPECT TO THIS PROJECT, AND APEX SHALL BE DEEMED THE AUTHOR OF THE DRAWING AND SHALL RETAIN ALL COMMON LAW, STATUTORY AND OTHER RESERVED RIGHTS WITH RESPECT THERETO, INCLUDING THE COPYRIGHT. THE DOCUMENTS SHALL NOT BE USED ON OTHER PROJECTS, FOR ADDITIONS TO THIS PROJECT OR FOR COMPLETION OF THIS PROJECT BY OTHERS, EXCEPT BY AGREEMENT IN WRITING AND WITH APPROPRIATE COMPENSATION TO APEX.

COMMONWEALTH OF MASSACHUSETTS
CHESTER H. MYERS
ENVIRONMENTAL
NO. 48554
8/17/2012
REGISTERED PROFESSIONAL ENGINEER

PROJECT
NEW BEDFORD MARINE COMMERCE TERMINAL

OWNER
MASSACHUSETTS CLEAN ENERGY CENTER
55 SUMMER STREET, 9TH FLOOR
BOSTON, MA

NO.	DATE	DESCRIPTION	BY
1.	12/23/11	FOR CONSTRUCTION	TEB

PROJECT NO.	6690
CADD FILE	UPLAND_GRADING
DESIGNED BY	CWM
DRAWN BY	CWM
CHECKED BY	CHM
DATE	8-8-11
DRAWING SCALE	1"=40'

GRAPHIC SCALE
SCALE: 1"=40'
0 20 40 80

SHEET TITLE
FORMER DARTMOUTH FINISHING SITE FINAL GRADING PLAN

DRAWING NO.
P-1.7

P:\Jobs\6690 NBH_ Phase IV\PLANS\FINAL_PLANS\100% Submittal\DRAINAGE SWALE\P-1.3-P-1.7_X-1.1_X-1.2UPLAND_GRADING.dwg 5/8/2013 10:39 AM BOSTON CAD USER

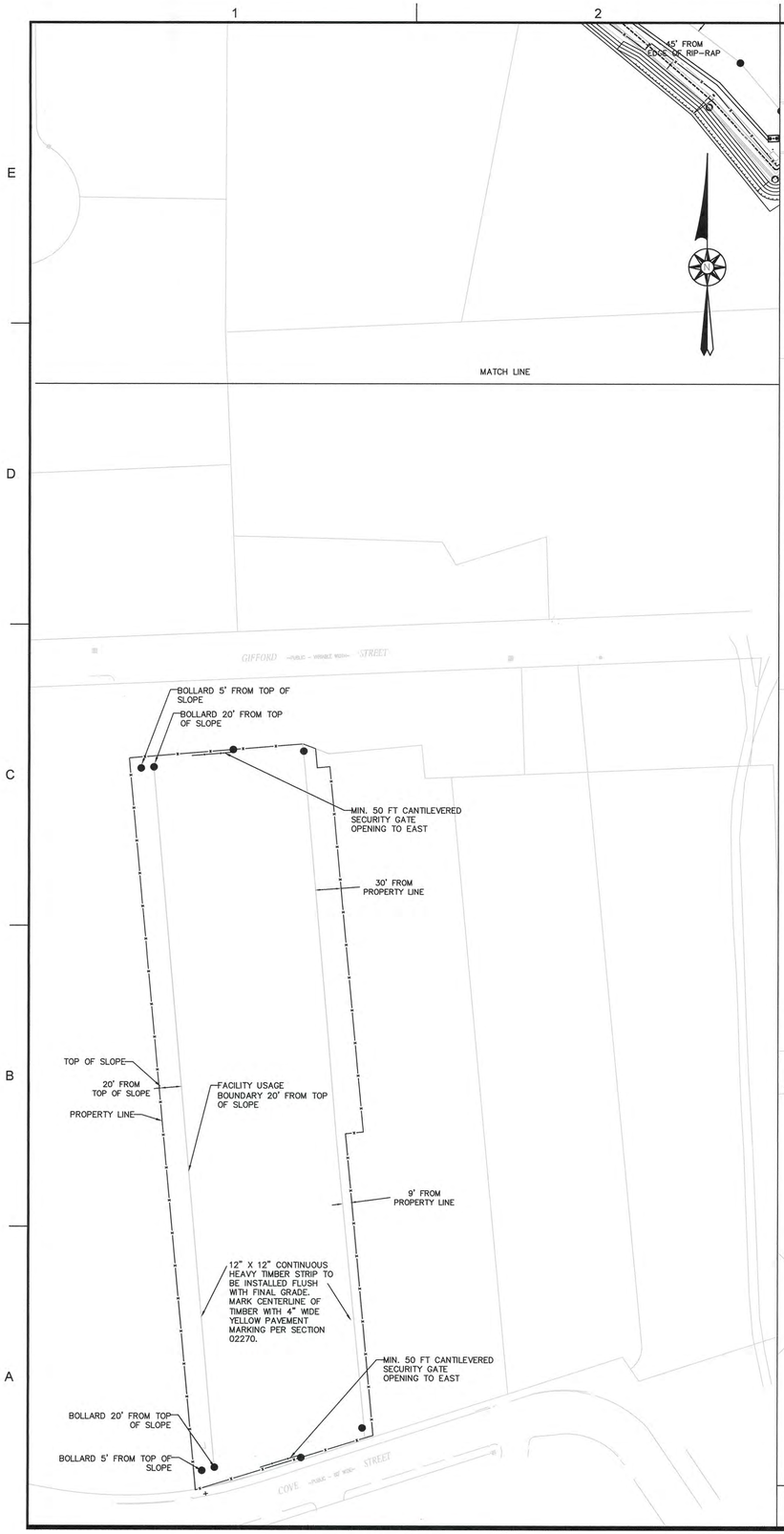

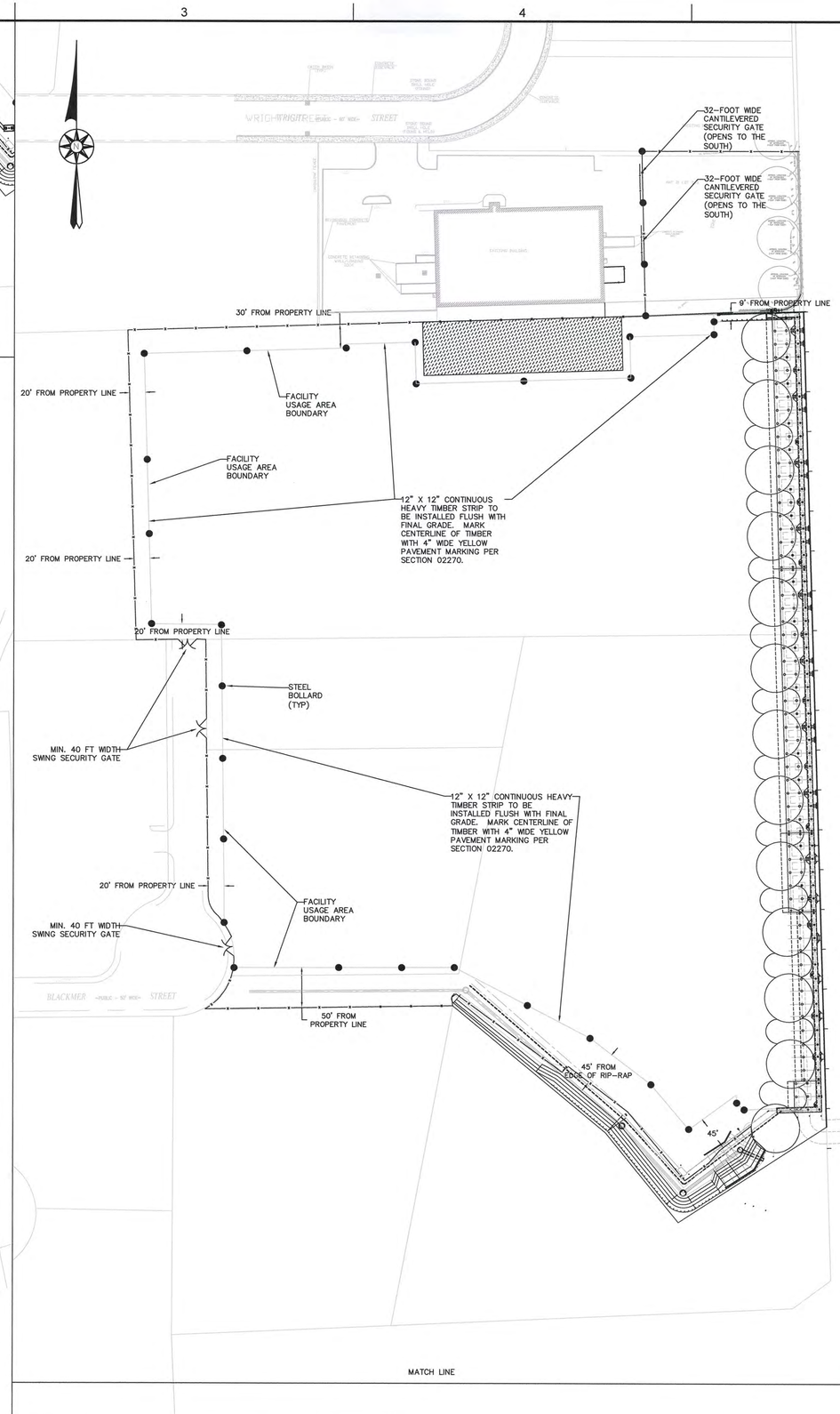

LOCATION OF PERMANENT 8-FOOT TALL SECURITY FENCING TOPPED WITH CONCERTINA WIRE.

LOCATION OF PERMANENT SECURITY FENCING GATE (NOT TO SCALE).

LOCATION OF 6" DIAMETER BOLLARD (NOT TO SCALE – SEE CONTRACT DRAWING D-2 FOR DETAIL).

LOCATION OF PERMANENT 8-FOOT TALL CANTILEVER GATE TOPPED WITH CONCERTINA WIRE.

CRITICAL DIMENSION CHART 50' GATE			
MARK	DESCRIPTION	FORMULA	DIM.
A	CLEAR OPENING	A	50'
B	COUNTERBALANCE POST SPACING C/C	(A/2)-11"	24.08'
C	OVERALL GATE LENGTH	A x 1.5	75'
D	COUNTERBALANCE LENGTH	A x 0.5	25'
E	NOMINAL GATE HEIGHT	E	8'
F	POST HEIGHT (W BARB ARMS)	E + 1'-6"	9.5'
G	FABRIC HEIGHT	E – 1'-0"	7'

CRITICAL DIMENSION CHART 32' GATE			
	DESCRIPTION	FORMULA	DIM.
	CLEAR OPENING	A	32'
	COUNTERBALANCE POST SPACING C/C	(A/2)-11"	15'
	OVERALL GATE LENGTH	A x 1.5	48'
	COUNTERBALANCE LENGTH	A x 0.5	12.5'
	NOMINAL GATE HEIGHT	E	8'
	POST HEIGHT (W BARB ARMS)	E + 1'-6"	9.5'
	FABRIC HEIGHT	E – 1'-0"	7'

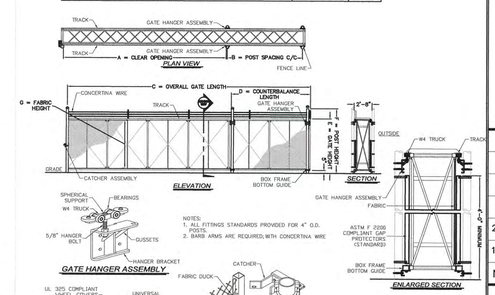

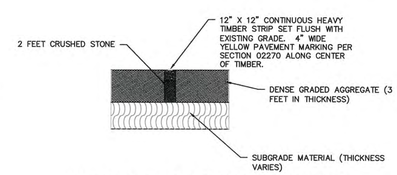

TYPICAL FACILITY USAGE AREA BOUNDARY DETAIL

NTS

NOTES:

1). BOLLARD LOCATIONS AS SHOWN ON PLAN.
2). FOR BOLLARD DETAIL, SEE DETAIL DRAWING D-2.

APEX

ROCKVILLE, MD
SOUTH WINDSOR, CT - BOSTON, MA - NEW BEDFORD, MA - HOLYOKE, MA

184 HIGH STREET, SUITE 502
BOSTON, MA 02210

58H CONNECTICUT AVENUE
SOUTH WINDSOR, CT

This drawings prepared by Apex for this project are instruments of Apex's service for use solely with respect to this project, and Apex shall be deemed the author of the Drawing and shall retain all common law, statutory and other reserved rights with respect thereto, including the copyright. The Documents shall not be used on other projects, for additions to this project or for completion of this project by others, except by agreement in writing and with appropriate compensation to Apex.

COMMONWEALTH OF MASSACHUSETTS
CHESTER R. HOVSEP
ENVIRONMENTAL
NO. 45654
PROFESSIONAL ENGINEER
5/17/12

PROJECT
NEW BEDFORD MARINE COMMERCE TERMINAL

OWNER
MASSACHUSETTS CLEAN ENERGY CENTER
55 SUMMER STREET, 9TH FLOOR
BOSTON, MA

NO.	DATE	DESCRIPTION	BY
2.	3/22/12	MARKINGS REMOVED	CWM
1.	12/23/11	FOR CONSTRUCTION	TEB

PROJECT NO.	6690
CADD FILE	UPLAND_GRADING
DESIGNED BY	CWM
DRAWN BY	CWM
CHECKED BY	CHM
DATE	11-16-11
DRAWING SCALE	1"=80'

GRAPHIC SCALE
SCALE: 1"=80'
0 40 80 160

SHEET TITLE

FACILITY USAGE AREA MARKINGS

DRAWING NO.

P-1.8

NOTES:

1. MATERIAL TO BE DREDGED AS SHOWN ON CONTRACT DRAWINGS "P-2.1 TOP OF DREDGE FOOTPRINT PLAN 1" AND "P-2.2 TOP OF DREDGE FOOTPRINT PLAN 2" SHALL BE DREDGED AND DISPOSED INTO CAD CELL #3.
2. MATERIAL TO BE DREDGED AS SHOWN ON CONTRACT DRAWINGS "P-2.1 TOP OF DREDGE FOOTPRINT PLAN 1" AND "P-2.2 TOP OF DREDGE FOOTPRINT PLAN 2" SHALL BE DREDGED AND DISPOSED INTO CAD CELL #3 BEFORE MATERIAL TO BE DREDGED AS SHOWN ON CONTRACT DRAWINGS "P-2.3 INTERMEDIATE DREDGE FOOTPRINT PLAN 1" AND P-2.4 INTERMEDIATE DREDGE FOOTPRINT PLAN 2" IS DREDGED.
3. MATERIAL TO BE DREDGED AS SHOWN ON CONTRACT DRAWINGS "P-2.3 INTERMEDIATE DREDGE FOOTPRINT PLAN 1" AND "P-2.4 INTERMEDIATE DREDGE FOOTPRINT PLAN 2" SHALL NOT BE DREDGED UNTIL MATERIAL TO BE DREDGED AS SHOWN ON CONTRACT DRAWINGS "P-2.1 TOP OF DREDGE FOOTPRINT PLAN 1" AND "P-2.2 TOP OF DREDGE FOOTPRINT PLAN 2" HAS BEEN DREDGED AND DISPOSED INTO CAD CELL #3.
4. ALSO SEE DRAWINGS P-2.2, P-2.3, P-2.4, P-2.5, AND P-2.6.
5. FOR DREDGE CROSS SECTIONS SEE DRAWINGS X-2.1 AND X-2.2. FOR LOCATIONS OF DREDGE CROSS SECTIONS, SEE DRAWINGS P-2.5 AND P-2.6.
6. DREDGE AREA 24 IS AREA REFERENCED WITHIN OPTIONAL BID ITEM NO. 0003A.

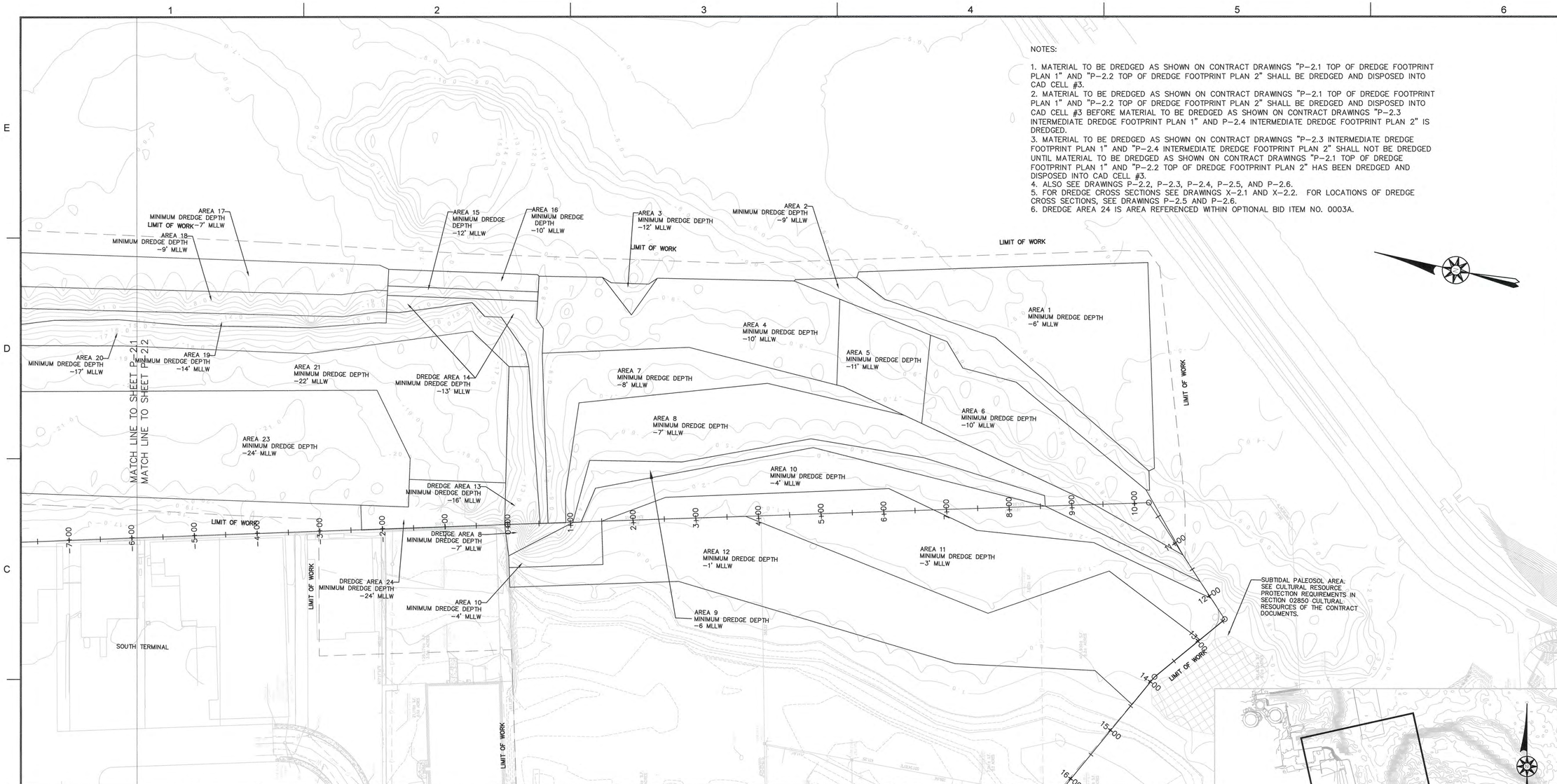

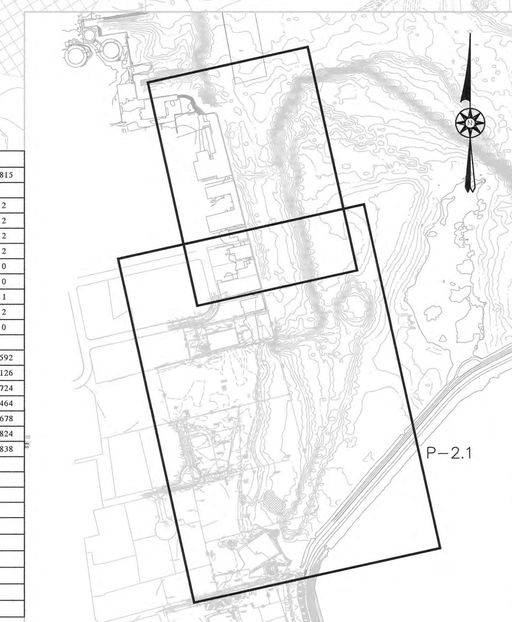

AREA 1		AREA 4 (CONT.)		AREA 7 (CONT.)		AREA 9 (CONT.)		AREA 11 (CONT.)		AREA 14 (CONT.)		AREA 17 (CONT.)		AREA 19 (CONT.)		AREA 20 (CONT.)		AREA 22 (CONT.)	
X=816773.7442	Y=2688088.1407	X=816628.1936	Y=2688427.0031	X=816282.4750	Y=2688457.5426	X=816473.5399	Y=2687716.9275	X=816394.9282	Y=2687594.9245	X=816512.3113	Y=2688569.0594	X=816559.8409	Y=2688885.7625	X=816373.7548	Y=2689527.1136	X=816378.6031	Y=2689447.3213	X=816267.4482	Y=2690052.2815
X=816888.0645	Y=2687641.1172	X=816676.8886	Y=2688485.4051	X=816327.8275	Y=2688468.1350	X=816484.7068	Y=2688098.3319	X=816287.1494	Y=2687769.2422	X=816272.6087	Y=2688497.3788	X=816579.0737	Y=2688833.8913	X=816372.6105	Y=2689837.5853	X=816421.2830	Y=2689324.0000	AREA 23	
X=816570.3589	Y=2687559.8682	X=816656.8168	Y=2688584.3035	X=816473.5958	Y=2688478.4339	X=816346.4784	Y=2688423.2605	X=816354.3658	Y=2688179.8199	X=816275.7469	Y=2688485.1896	X=816581.9836	Y=2688815.1037	X=816396.5598	Y=2689914.0596	X=816444.6904	Y=2689222.5249	X= 816296.1	Y=2688716.2
X=816564.2935	Y=2687567.573	X=816589.7098	Y=2688573.4388	X=816568.9019	Y=2688191.7202	X=816288.7434	Y=2688433.9722	AREA 12		X=816538.0204	Y=2688552.7133	AREA 18		X=816362.8706	Y=2690095.3594	X=816458.0878	Y=2689119.3183	X= 816328.9	Y=2688722.2
X=816718.6368	Y=2687853.021	X=816576.7701	Y=2688559.4657	AREA 8		AREA 10		X=816319.2693	Y=2687429.7574	X=816576.7701	Y=2688559.4657	X=816396.5634	Y=2688914.0831	X=816319.3198	Y=2690085.2047	X=816497.4877	Y=2688923.6410	X= 816423.4	Y=2688797.2
X=816739.9621	Y=2688037.7404	X=816538.1020	Y=2688552.7275	X=816282.4750	2688457.5400	X=816285.2639	Y=2688446.6668	X=816245.3437	Y=2687487.7646	X=816589.7096	Y=2688573.4387	X=816419.7633	Y=26899919.3306	X=816332.6500	Y=2689657.8526	AREA 21		X= 816219.5	Y=2689706.2
X=816764.2209	Y=2688089.0541	X=816597.7420	Y=2688326.4731	X=816327.8275	Y=2688468.1350	X=816288.7434	Y=2688433.9722	X=816194.9543	Y=2687513.2873	X=816617.3632	Y=2688577.7218	X=816423.5131	Y=2689897.9714	X=816378.0863	Y=2689447.2098	X=816328.9479	Y=2688722.1986	X= 816073.6	Y=2689682.0
AREA 2		X=816590.1344	Y=2688083.1296	X=816473.5958	Y=2688478.4339	X=816346.4784	Y=2688423.2605	X=816235.0670	Y=2687582.9300	X=816574.8861	Y=2688814.0044	X=816405.9401	Y=2689866.4097	X=816421.2830	Y=2689324.0000	X=816296.0531	Y=2688716.1838	X= 816239.0	Y=2688783.0
X=816764.2209	Y=2688089.0541	AREA 5		X=816568.9019	Y=2688191.7202	X=816484.7068	Y=2688098.3319	X=816197.3778	Y=2687803.0498	X=816548.4799	Y=2688809.2850	X=816398.2017	Y=2689836.6597	X=816444.6904	Y=2689222.5249	X=816323.8522	Y=2688564.9824	X= 816200.9	Y=2688773.1
X=816740.0365	Y=2688183.6216	X=816724.8298	Y=2688108.0709	X=816566.2663	Y=2687967.7480	X=816473.5373	Y=2687716.9369	X=816229.9883	Y=2688261.8401	AREA 15		X=816431.8497	Y=2689654.0023	X=816458.0878	Y=2689119.3183	X=816505.7240	Y=2688599.9336	X= 816258.5	Y=2688552.2
X=816737.3331	Y=2688185.7028	X=816590.1344	Y=2688083.1296	X=816493.3405	Y=2687642.6433	X=816409.8311	Y=2687449.4289	X=816162.8146	Y=2688522.7544	X=816632.1899	Y=2688580.0183	X=816400.139	Y=2689529.4198	X=816497.4877	Y=2688923.6410	X=816548.3108	Y=2688669.2648	X= 816323.9	Y=2688565.0
X=816695.6083	Y=2687926.637	X=816589.8083	Y=2688072.6987	X=816409.8311	Y=2687449.4289	X=816387.5508	Y=2687426.6966	X=816192.9784	Y=2688530.5202	X=816617.3632	Y=2688577.7218	X=816453.1413	Y=2689436.2051	AREA 20		X=816456.6735	Y=2688917.8271	AREA 24	
X=816659.8265	Y=2687892.8305	X=816559.5231	Y=2687937.6865	X=816473.5399	Y=2687716.9270	X=816433.6500	Y=2687628.8726	X=816230.2207	Y=2688385.3352	X=816574.8865	Y=2688814.0044	X=816559.8409	Y=2688885.7625	X=816529.0830	Y=2688818.5483	X=816405.4663	Y=2689207.0160	X=816296.0576	Y=2688716.1592
X=816656.3573	Y=2687804.7782	X=816700.0718	Y=2687954.3507	X=816489.7040	Y=2687721.5676	X=816412.1869	Y=2687815.2495	X=816297.0544	Y=2688402.4275	X=816589.7130	Y=2688816.3008	X=816579.0737	Y=2688833.8913	X=816531.2877	Y=2688806.2124	X=816306.1663	Y=2689661.9534	X=816252.7812	Y=2688708.2126
X=816533.9658	Y=2687565.5312	AREA 6		X=816507.0269	Y=2687922.9533	X=816446.9807	Y=2687966.5007	X=816354.3658	Y=2688179.8199	AREA 16		X=816581.9836	Y=2688815.1037	X=816548.6802	Y=2688809.0964	X=816293.5016	Y=2689979.2904	X=816239.0217	Y=2688782.9724
X=816534.4138	Y=2687559.8197	X=816700.0718	Y=2687954.3507	X=816497.5278	Y=2688105.0489	X=816356.2986	Y=2688310.8518	X=816287.1494	Y=2687769.2422	X=816656.8168	Y=2688584.3035	X=816548.602	Y=2688809.5683	X=816551.7643	Y=2688790.4976	X=816319.3198	Y=2690085.2047	X=816200.8558	Y=2688773.1464
X=816564.2935	Y=2687567.573	X=816695.6083	Y=2687926.6370	X=816417.0225	Y=2688297.4863	X=816297.0544	Y=2688402.4275	X=816394.9282	Y=2687594.9245	X=816658.822	Y=2688587.4672	X=816546.2569	Y=2688821.7235	X=816592.6879	Y=2688679.4939	X=816287.5527	Y=2690079.6342	X=816258.5030	Y=2688552.1678
X=816718.6368	Y=2687853.021	X=816659.8265	Y=2687892.8305	X=816387.6000	Y=2688441.9400	X=816230.2200	Y=2688385.3413	AREA 13		X=816615.8688	Y=2688820.6403	X=816526.0265	Y=2688876.285	X=816575.4427	Y=2688655.0499	X=816267.4482	Y=2690052.2815	X=816323.8522	Y=2688564.9824
X=816739.9621	Y=2688037.7404	X=816656.3573	Y=2687804.7782	X=816285.2639	Y=2688446.6668	X=816192.9800	Y=2688530.5200	X=816258.5030	Y=2688552.1678	X=816589.713	Y=2688816.3008	X=816419.5575	Y=2689425.5381	X=816580.0114	Y=2688628.9156	X=816251.9276	Y=2690001.2153	X=816296.0531	Y=2688716.1838
AREA 3		X=816533.9658	Y=2687565.5312	X=816211.2400	Y=2688535.2200	x=816211.2400	y=2688535.2200	X = 816414.7248	Y=2688582.802	X=816632.1899	Y=2688580.0183	X=816373.7548	Y=2689527.1136	X=816533.7748	Y=2688578.7996	X=816258.8791	Y=2689712.6784		
X=816676.8886	Y=2688485.4051	X=816445.0594	Y=2687485.3716	X=816258.5000	Y=2688552.1700	AREA 11		X=816305.7240	Y=2688599.9336	AREA 17		X=816406.2714	Y=2689654.8578	X=816512.3113	Y=2688569.0594	X=816219.4483	Y=2689706.4166		
X=816671.4083	Y=2688469.4631	X=816493.3405	Y=2687642.6433	x=816282.4750	Y=2688457.5426	X=816297.0544	Y=2688402.4275	X=816512.3113	Y=2688569.0594	X=816615.8688	Y=2688820.6403	X=816372.6105	Y=2689837.5853	X=816305.7240	Y=2688599.9336	X=816423.4126	Y=2688797.2060		
X=816682.2063	Y=2688410.8454	X=816559.5231	Y=2687937.6865	AREA 9		X=816356.2986	Y=2688310.8518	X=816272.6086	Y=2688497.3791	X=816619.0435	Y=2688836.5257	AREA 19		X=816548.3108	Y=2688669.2648	AREA 22			
X=816694.3779	Y=2688399.2312	AREA 7		X=816285.2639	Y=2688446.6668	X=816446.9807	Y=2687966.5007	AREA 14		X=816423.5131	Y=2689897.9714	X=816529.0830	Y=2688818.5483	X=816456.6735	Y=2688917.8271	X=816255.8401	Y=2690075.3554		
X=816628.1936	Y=2688427.0031	X=816566.2663	Y=2687967.7480	X=816387.5954	Y=2688441.9398	X=816412.1869	Y=2687815.2495	X=816551.7643	Y=2688790.4976	X=816405.9401	Y=2689866.4097	X=816531.2877	Y=2688806.2124	X=816405.4663	Y=2689207.0160	X=816200.9408	Y=2690374.8289		
AREA 4		X=816589.8083	Y=2688072.6987	X=816416.8466	Y=2688297.9067	X=816433.6500	Y=2687628.8726	X=816592.6879	Y=2688679.4939	X=816398.2017	Y=2689836.6597	X=816548.6802	Y=2688809.0964	X=816306.1663	Y=2689661.9534	X=815981.6336	Y=2690322.4224		
X=816724.8298	Y=2688108.0709	X=816597.7420	Y=2688326.4731	X=816497.5278	Y=2688105.0489	X=816387.5508	Y=2687426.6966	X=816575.4427	Y=2688655.0499	X=816431.8497	Y=2689653.9996	X=816546.2569	Y=2688821.7235	X=816293.5016	Y=2689979.2904	X=816098.8665	Y=2689686.0184		
X=816737.3331	Y=2688185.7028	X=816538.1003	Y=2688552.7339	X=816507.0269	Y=2687922.9533	X=816359.5399	Y=2687398.1583	X=816580.0114	Y=2688628.9156	X=816400.139	Y=2689529.4198	X=816526.0265	Y=2688876.2850	X=816319.3198	Y=2690085.2047	X=816258.8791	Y=2689712.6784		
X=816694.3779	Y=2688399.2312	X=816275.7469	Y=2688485.1896	X=816489.7040	Y=2687721.5676	X=816319.2693	Y=2687429.7574	X=816533.7748	Y=2688578.7996	X=816453.1413	Y=2689436.2051	X=816419.5575	Y=2689425.5381	X=816332.6500	Y=2689657.8526	X=816251.9276	Y=2690001.2153		

APEX

ROCKVILLE, MD
SOUTH WINDSOR, CT - BOSTON, MA - NEW BEDFORD, MA - HOLYOKE, MA

184 HIGH STREET, SUITE 502
BOSTON, MA 02210

58H CONNECTICUT AVENUE
SOUTH WINDSOR, CT

This drawings prepared by Apex for this project are instruments of Apex's service for use solely with respect to this project, and Apex shall be deemed the author of the Drawing and shall retain all common law, statutory and other reserved rights with respect thereto, including the copyright. The Documents shall not be used on other projects, for additions to this project or for completion of this project by others, except by agreement in writing and with appropriate compensation to Apex. .

COMMONWEALTH OF MASSACHUSETTS
CHESTER H. MYERS JR.
ENVIRONMENTAL
NO. 45654
REGISTERED PROFESSIONAL ENGINEER
8/30/11

PROJECT
NEW BEDFORD MARINE COMMERCE TERMINAL

OWNER
MASSACHUSETTS CLEAN ENERGY CENTER
55 SUMMER STREET, 9TH FLOOR
BOSTON, MASSACHUSETTS

NO.	DATE	DESCRIPTION	BY
1.	12-23-11	FOR CONSTRUCTION	CHM

PROJECT NO.	6690
CADD FILE	B_I_DREDGE
DESIGNED BY	GCD
DRAWN BY	CWM
CHECKED BY	CHM
DATE	8/30/11
DRAWING SCALE	1"=80'

GRAPHIC SCALE
SCALE: 1"=80'
0 40 80 160

SHEET TITLE

TOP OF DREDGE FOOTPRINT PLAN 1

DRAWING NO.

P-2.1

NOTES:

1. MATERIAL TO BE DREDGED AS SHOWN ON CONTRACT DRAWINGS "P-2.1 TOP OF DREDGE FOOTPRINT PLAN 1" AND "P-2.2 TOP OF DREDGE FOOTPRINT PLAN 2" SHALL BE DREDGED AND DISPOSED INTO CAD CELL #3.
2. MATERIAL TO BE DREDGED AS SHOWN ON CONTRACT DRAWINGS "P-2.1 TOP OF DREDGE FOOTPRINT PLAN 1" AND "P-2.2 TOP OF DREDGE FOOTPRINT PLAN 2" SHALL BE DREDGED AND DISPOSED INTO CAD CELL #3 BEFORE MATERIAL TO BE DREDGED AS SHOWN ON CONTRACT DRAWINGS "P-2.3 INTERMEDIATE DREDGE FOOTPRINT PLAN 1" AND P-2.4 INTERMEDIATE DREDGE FOOTPRINT PLAN 2" IS DREDGED.
3. MATERIAL TO BE DREDGED AS SHOWN ON CONTRACT DRAWINGS "P-2.3 INTERMEDIATE DREDGE FOOTPRINT PLAN 1" AND "P-2.4 INTERMEDIATE DREDGE FOOTPRINT PLAN 2" SHALL NOT BE DREDGED UNTIL MATERIAL TO BE DREDGED AS SHOWN ON CONTRACT DRAWINGS "P-2.1 TOP OF DREDGE FOOTPRINT PLAN 1" AND "P-2.2 TOP OF DREDGE FOOTPRINT PLAN 2" HAS BEEN DREDGED AND DISPOSED INTO CAD CELL #3.
4. ALSO SEE DRAWINGS P-2.2, P-2.3, P-2.4, P-2.5, AND P-2.6.
5. FOR DREDGE CROSS SECTIONS SEE DRAWINGS X-2.1 AND X-2.2. FOR LOCATIONS OF CROSS SECTIONS, SEE DRAWINGS P-2.5 AND P-2.6.
6. DREDGE AREA 24 IS AREA REFERENCED WITHIN OPTIONAL BID ITEM NO. 0003A.

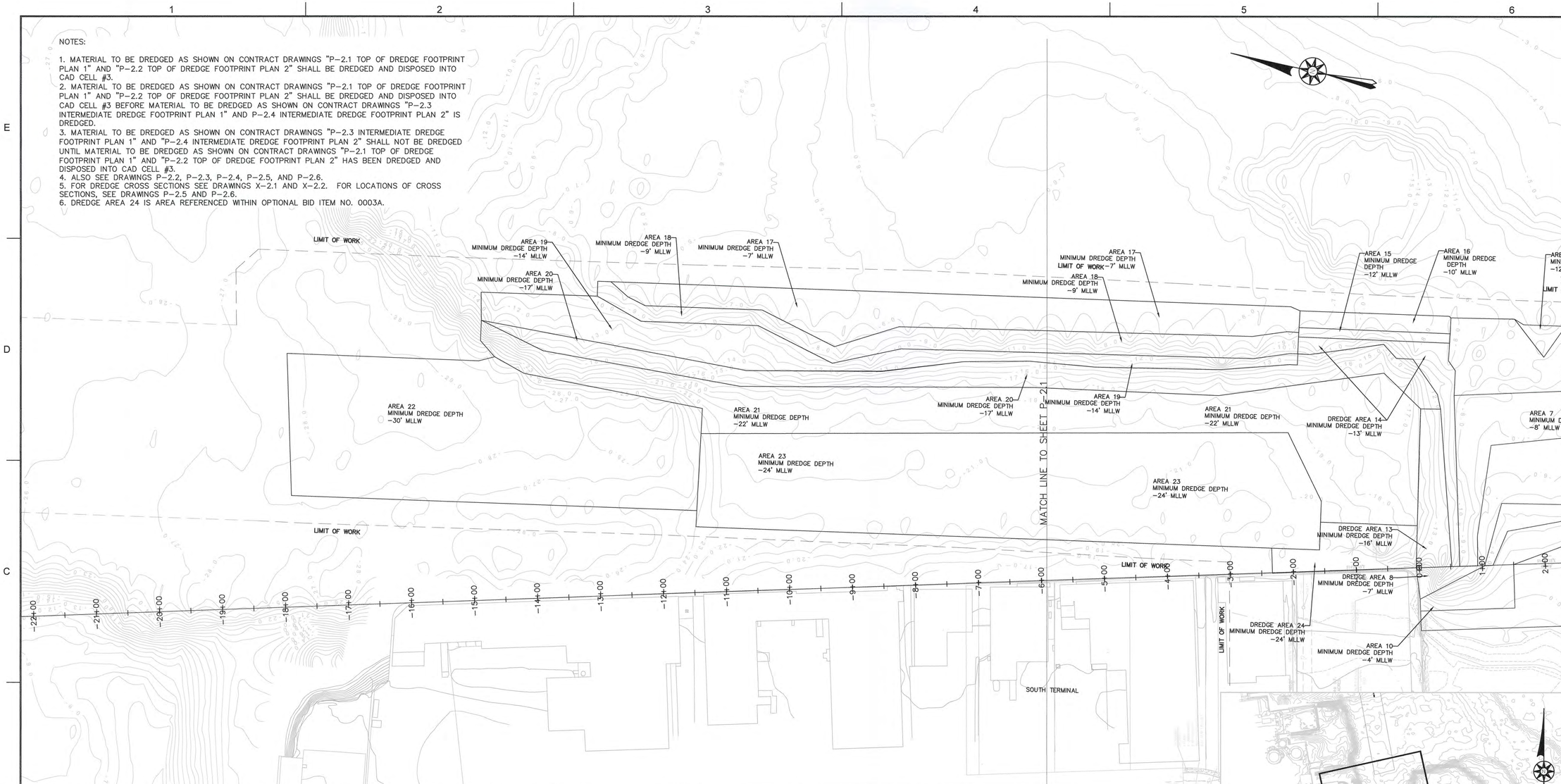

AREA 1	
X=816773.7442	Y=2688088.1407
X=816888.0645	Y=2687641.1172
X=816570.3589	Y=2687559.8682
X=816564.2935	Y=2687567.573
X=816718.6368	Y=2687853.021
X=816739.9621	Y=2688037.7404
X=816764.2209	Y=2688089.0541
AREA 2	
X=816764.2209	Y=2688089.0541
X=816740.0365	Y=2688183.6216
X=816737.3331	Y=2688185.7028
X=816695.6083	Y=2687926.637
X=816659.8265	Y=2687892.8305
X=816656.3573	Y=2687804.7782
X=816533.9658	Y=2687565.5312
X=816534.4138	Y=2687559.8197
X=816564.2935	Y=2687567.573
X=816718.6368	Y=2687853.021
X=816739.9621	Y=2688037.7404
AREA 3	
X=816676.8886	Y=2688485.4051
X=816671.4083	Y=2688469.4631
X=816682.2063	Y=2688410.8454
X=816694.3779	Y=2688399.2312
X=816628.1936	Y=2688427.0031
AREA 4	
X=816724.8298	Y=2688108.0709
X=816737.3331	Y=2688185.7028
X=816694.3779	Y=2688399.2312

AREA 4 (CONT.)	
X=816628.1936	Y=2688427.0031
X=816676.8886	Y=2688485.4051
X=816656.8168	Y=2688584.3035
X=816589.7098	Y=2688573.4388
X=816576.7701	Y=2688559.4657
X=816538.1020	Y=2688552.7275
X=816597.7420	Y=2688326.4731
X=816590.1344	Y=2688083.1296
AREA 5	
X=816724.8298	Y=2688108.0709
X=816590.1344	Y=2688083.1296
X=816589.8083	Y=2688072.6987
X=816559.5231	Y=2687937.6865
X=816700.0718	Y=2687954.3507
AREA 6	
X=816700.0718	Y=2687954.3507
X=816695.6083	Y=2687926.6370
X=816659.8265	Y=2687892.8305
X=816656.3573	Y=2687804.7782
X=816533.9658	Y=2687565.5312
X=816445.0594	Y=2687485.3716
X=816493.3405	Y=2687642.6433
X=816559.5231	Y=2687937.6865
AREA 7	
X=816566.2663	Y=2687967.7480
X=816589.8083	Y=2688072.6987
X=816597.7420	Y=2688326.4731
X=816538.1003	Y=2688552.7339
X=816275.7469	Y=2688485.1896

AREA 7 (CONT.)	
X=816282.4750	Y=2688457.5426
X=816282.4750	Y=2688468.1350
X=816327.8275	Y=2688468.1350
X=816473.5958	Y=2688478.4339
X=816568.9019	Y=2688191.7202
AREA 8	
X=816282.4750	2688457.5400
X=816327.8275	Y=2688468.1350
X=816473.5958	Y=2688478.4339
X=816568.9019	Y=2688191.7202
X=816566.2663	Y=2687967.7480
X=816493.3405	Y=2687642.6433
X=816409.8311	Y=2687449.4289
X=816409.8311	Y=2687449.4289
X=816473.5399	Y=2687716.9270
X=816489.7040	Y=2687721.5676
X=816507.0269	Y=2687922.9533
X=816497.5278	Y=2688105.0489
X=816417.0225	Y=2688297.4863
X=816387.6000	Y=2688441.9400
X=816285.2639	Y=2688446.6668
X=816211.2400	Y=2688535.2200
X=816258.5000	Y=2688552.1700
X=816282.4750	Y=2688457.5426
AREA 9	
X=816285.2639	Y=2688446.6668
X=816387.5954	Y=2688441.9398
X=816416.8466	Y=2688297.9067
X=816497.5278	Y=2688105.0489
X=816387.5508	Y=2688426.6966
X=816359.5399	Y=2688398.1583
X=816489.7040	Y=2687721.5676

AREA 9 (CONT.)	
X=816473.5399	Y=2687716.9275
X=816484.7068	Y=2688098.3319
X=816346.4784	Y=2688423.2605
X=816288.7434	Y=2688433.9722
AREA 10	
X=816285.2639	Y=2688446.6668
X=816288.7434	Y=2688433.9722
X=816484.7068	Y=2688098.3319
X=816473.5373	Y=2687716.9369
X=816409.8311	Y=2687449.4289
X=816387.5508	Y=2687426.6966
X=816433.6500	Y=2687628.8726
X=816346.4784	Y=2688423.2605
X=816359.5399	Y=2687398.1583
X=816319.2693	Y=2687429.7574

AREA 11 (CONT.)	
X=816394.9282	Y=2687594.9245
X=816287.1494	Y=2687769.2422
X=816354.3658	Y=2688179.8199
AREA 12	
X=816538.0204	Y=2688552.7133
X=816319.2693	Y=2687429.7574
X=816245.3437	Y=2687487.7646
X=816194.9543	Y=2687513.2873
X=816235.0670	Y=2687582.9300
X=816197.3778	Y=2687803.0498
X=816229.9883	Y=2688261.8401
X=816162.8146	Y=2688522.7544
X=816192.9784	Y=2688530.5202
X=816230.2207	Y=2688385.3352
X=816297.0544	Y=2688402.4275
X=816354.3658	Y=2688179.8199
X=816287.1494	Y=2687769.2422
X=816394.9282	Y=2687594.9245
AREA 13	
X=816258.5030	Y=2688552.1678
X = 816414.7248	Y=2688582.802
X=816505.7240	Y=2688599.9336
X=816512.3113	Y=2688569.0594
X=816272.6086	Y=2688497.3791
AREA 14	
X=816446.9807	Y=2687966.5007
X=816412.1869	Y=2687815.2495
X=816433.6500	Y=2687628.8726
X=816592.6879	Y=2688679.4939
X=816575.4427	Y=2688655.0499
X=816580.0114	Y=2688628.9156
X=816533.7748	Y=2688578.7996

AREA 14 (CONT.)	
X=816512.3113	Y=2688569.0594
X=816272.6087	Y=2688497.3788
X=816275.7469	Y=2688485.1896
X=816538.0204	Y=2688552.7133
X=816576.7701	Y=2688559.4657
X=816589.7096	Y=2688573.4387
X=816617.3632	Y=2688577.7218
X=816574.8861	Y=2688814.0044
X=816548.4799	Y=2688809.2850
AREA 15	
X=816632.1899	Y=2688580.0183
X=816617.3632	Y=2688577.7218
X=816574.8865	Y=2688814.0044
X=816589.7130	Y=2688816.3008
AREA 16	
X=816656.8168	Y=2688584.3035
X=816658.822	Y=2688587.4672
X=816615.8688	Y=2688820.6403
X=816589.713	Y=2688816.3008
X=816632.1899	Y=2688580.0183
AREA 17	
X=816615.8688	Y=2688820.6403
X=816272.6105	Y=2689837.5853
AREA 18	
X=816423.5131	Y=2689897.9714
X=816398.2017	Y=2689836.6597
X=816546.6802	Y=2688809.0964
X=816419.5575	Y=2689425.5381

AREA 17 (CONT.)	
X=816559.8409	Y=2688885.7625
X=816579.0737	Y=2688833.8913
X=816581.9836	Y=2688815.1037
AREA 18	
X=816396.5634	Y=2689914.0831
X=816419.7633	Y=2689919.3306
X=816423.5131	Y=2689897.9714
X=816398.2017	Y=2689836.6597
X=816444.6904	Y=2689222.5249
X=816458.0878	Y=2689119.3183
X=816548.3108	Y=2688669.2648
X=816497.4877	Y=2688923.6410
AREA 19	
X=816546.2569	Y=2688821.7235
X=816526.0265	Y=2688876.2850
X=816419.5575	Y=2689425.5381

AREA 19 (CONT.)	
X=816373.7548	Y=2689527.1136
X=816372.6105	Y=2689837.5853
X=816396.5598	Y=2689914.0596
X=816362.8706	Y=2690095.3594
X=816319.3198	Y=2690085.2047
X=816332.6500	Y=2689657.8526
X=816378.0863	Y=2689447.2098
X=816421.2830	Y=2689324.0000
X=816444.6904	Y=2689222.5249
X=816458.0878	Y=2689119.3183
X=816497.4877	Y=2688923.6410
AREA 20	
X=816529.0830	Y=2688818.5483
X=816531.2877	Y=2688806.2124
X=816548.6802	Y=2688809.0964
X=816551.7643	Y=2688790.4976
X=816592.6879	Y=2688679.4939
X=816575.4427	Y=2688655.0499
X=816580.0114	Y=2688628.9156
X=816533.7748	Y=2688578.7996
X=816512.3113	Y=2688569.0594
X=816505.7240	Y=2688599.9336
X=816548.3108	Y=2688669.2648
AREA 21	
X=816332.6500	Y=2689657.8526
X=816378.0863	Y=2689447.2098
X=816421.2830	Y=2689324.0000
X=816444.6904	Y=2689222.5249
X=816458.0878	Y=2689119.3183
X=816497.4877	Y=2688923.6410
X=816529.0830	Y=2688818.5483
X=816531.2877	Y=2688806.2124
X=816548.6802	Y=2688809.0964
X=816551.7643	Y=2688790.4976
X=816592.6879	Y=2688679.4939
X=816575.4427	Y=2688655.0499
X=816580.0114	Y=2688628.9156
X=816533.7748	Y=2688578.7996
X=816512.3113	Y=2688569.0594
X=816505.7240	Y=2688599.9336
X=816548.3108	Y=2688669.2648
AREA 22	
X=816255.8401	Y=2690075.3554
X=816200.9408	Y=2690374.8289
X=815981.6336	Y=2690322.4224
X=816098.8665	Y=2689686.0184
X=816258.8791	Y=2689712.6784
X=816251.9276	Y=2690001.2153

AREA 20 (CONT.)	
X=816378.6031	Y=2689447.3213
X=816421.2830	Y=2689324.0000
X=816444.6904	Y=2689222.5249
X=816458.0878	Y=2689119.3183
X=816497.4877	Y=2688923.6410
AREA 21	
X=816328.9479	Y=2688722.1986
X=816296.0531	Y=2688716.1838
X=816329.8522	Y=2688564.9824
X=816505.7240	Y=2688599.9336
X=816548.3108	Y=2688669.2648
X=816529.0830	Y=2688818.5483
X=816405.4663	Y=2689207.0160
X=816306.1663	Y=2689661.9534
X=816293.5016	Y=2689979.2904
X=816319.3198	Y=2690085.2047
X=816332.6500	Y=2689657.8526
X=816251.9276	Y=2690001.2153

AREA 22 (CONT.)	
X=816267.4482	Y=2690052.2815
AREA 23	
X= 816296.1	Y=2688716.2
X= 816328.5	Y=2688722.2
X= 816073.6	Y=2689682.0
X= 816239.0	Y=2688783.0
X= 816200.9	Y=2688773.1
X= 816258.5	Y=2688552.2
X= 816323.9	Y=2688565.0
AREA 24	
X=816296.0576	Y=2688716.1592
X=816252.7812	Y=2688708.2126
X=816239.0217	Y=2688782.9724
X=816200.8558	Y=2688773.1464
X=816258.5030	Y=2688552.1678
X=816323.8522	Y=2688564.9824
X=816296.0531	Y=2688716.1838

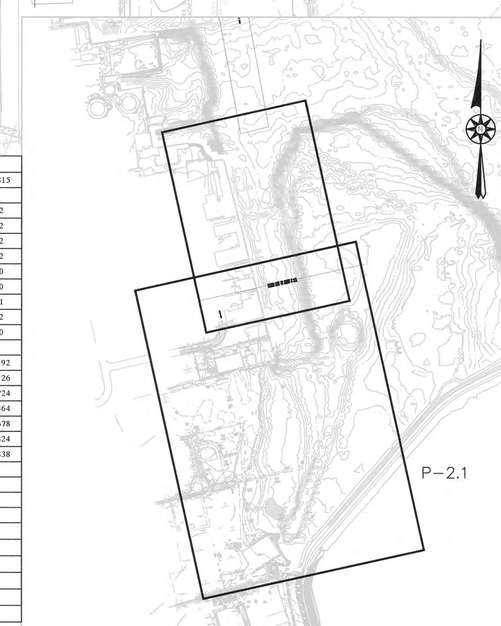

APEX

ROCKVILLE, MD
SOUTH WINDSOR, CT - BOSTON, MA - NEW BEDFORD, MA - HOLYOKE, MA

184 HIGH STREET, SUITE 502
BOSTON, MA 02210

58H CONNECTICUT AVENUE
SOUTH WINDSOR, CT

The drawings prepared by Apex for this project are instruments of Apex's service for use solely with respect to this project, and Apex shall be deemed the author of the Drawing and shall retain all common law, statutory and other reserved rights with respect thereto, including the copyright. The Documents shall not be used on other projects, for additions to this project or for completion of this project by others, except by agreement in writing and with appropriate compensation to Apex. .

COMMONWEALTH OF MASSACHUSETTS
CHESTER H. MYERS
ENVIRONMENTAL
NO. 45654
8/30/11
REGISTERED PROFESSIONAL ENGINEER

PROJECT
NEW BEDFORD MARINE COMMERCE TERMINAL

OWNER
MASSACHUSETTS CLEAN ENERGY CENTER
55 SUMMER STREET, 9TH FLOOR
BOSTON, MASSACHUSETTS

NO.	DATE	DESCRIPTION	BY
1.	12-23-11	FOR CONSTRUCTION	CHM

PROJECT NO.	6690
CADD FILE	B_I_DREDGE
DESIGNED BY	GCD
DRAWN BY	CWM
CHECKED BY	CHM
DATE	8/30/11
DRAWING SCALE	1"=80'

GRAPHIC SCALE
SCALE: 1"=80'
0 40 80 160

SHEET TITLE

TOP OF DREDGE FOOTPRINT PLAN 2

DRAWING NO.

P-2.2

NOTES:

1. MATERIAL TO BE DREDGED AS SHOWN ON CONTRACT DRAWINGS 'P-2.3 INTERMEDIATE DREDGE FOOTPRINT PLAN 1" AND 'P-2.4 INTERMEDIATE DREDGE FOOTPRINT PLAN 2" SHALL BE DREDGED AND USED TO CAP THE BORROW PIT CAPPING AREA, THE CAD CELL #1 CAPPING AREA AND THE WINTER FLOUNDTER MITIGATION AREA.
2. MATERIAL TO BE DREDGED AS SHOWN ON CONTRACT DRAWINGS 'P-2.1 TOP OF DREDGE FOOTPRINT PLAN 1" AND 'P-2.2 TOP OF DREDGE FOOTPRINT PLAN 2" SHALL BE DREDGED AND DISPOSED INTO CAD CELL #3 BEFORE MATERIAL TO BE DREDGED AS SHOWN ON CONTRACT DRAWINGS 'P-2.3 INTERMEDIATE DREDGE FOOTPRINT PLAN 1" AND 'P-2.4 INTERMEDIATE DREDGE FOOTPRINT PLAN 2" IS DREDGED.
3. MATERIAL TO BE DREDGED AS SHOWN ON CONTRACT DRAWINGS 'P-2.3 INTERMEDIATE DREDGE FOOTPRINT PLAN 1" AND 'P-2.4 INTERMEDIATE DREDGE FOOTPRINT PLAN 2" SHALL NOT BE DREDGED BEFORE MATERIAL SHOWN ON CONTRACT DRAWINGS 'P-2.1 TOP OF DREDGE FOOTPRINT PLAN 1" AND 'P-2.2 TOP OF DREDGE FOOTPRINT PLAN 2" HAS BEEN DREDGED AND DISPOSED INTO CAD CELL #3.
4. ALSO SEE DRAWINGS P-2.1, P-2.2, P-2.4, P-2.5, AND P-2.6.
5. FOR DREDGE CROSS-SECTIONS SEE DRAWINGS X-2.1 AND X-2.2. FOR LOCATIONS OF DREDGE CROSS-SECTIONS, SEE DRAWINGS P-2.5 AND P-2.6.

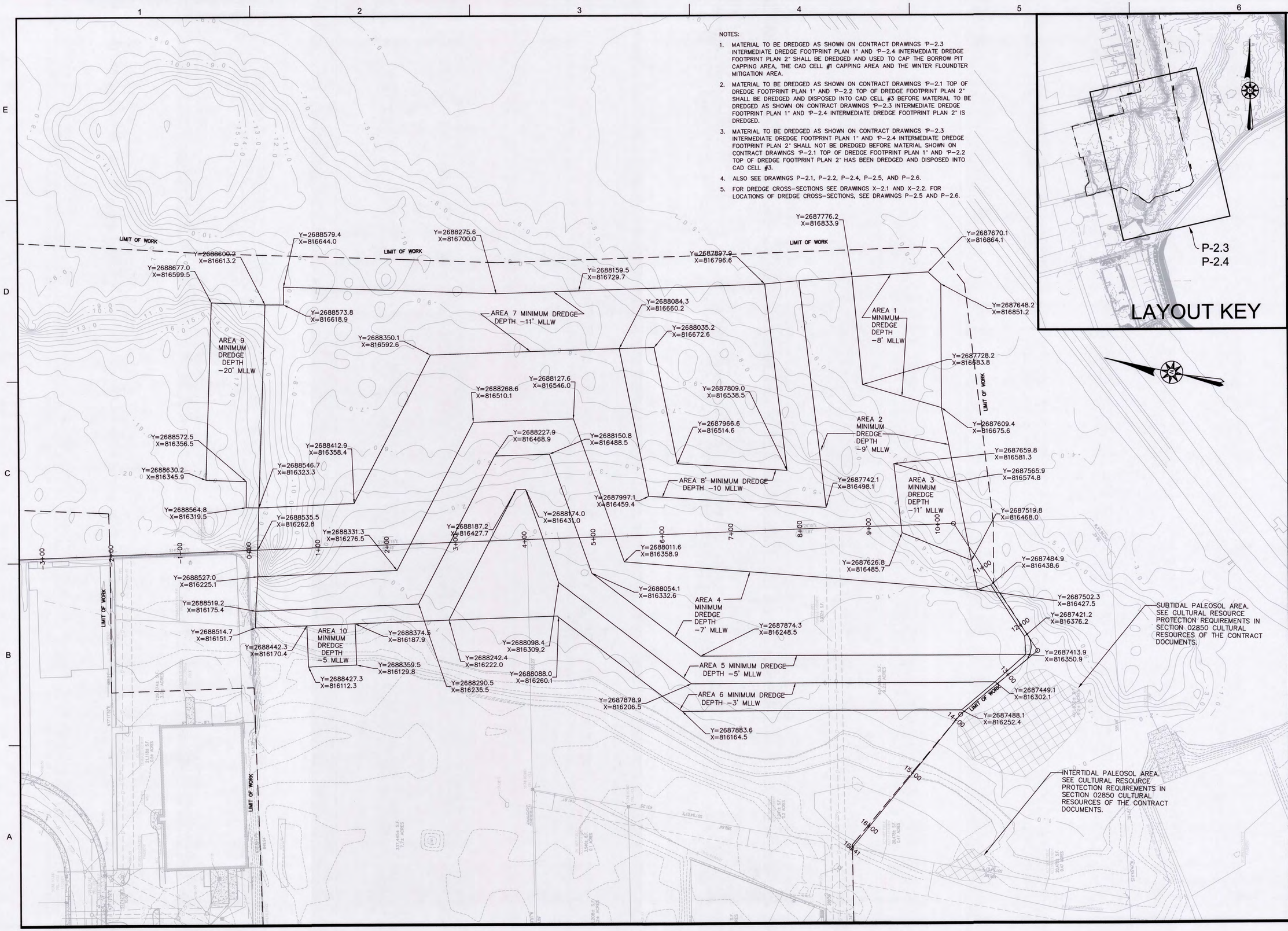

APEX

ROCKVILLE, MD
SOUTH WINDSOR, CT - BOSTON, MA - NEW BEDFORD, MA - HOLYOKE, MA

184 HIGH STREET, SUITE 502
BOSTON, MA 02210

58H CONNECTICUT AVENUE
SOUTH WINDSOR, CT

This drawings prepared by Apex for this project are instruments of Apex's service for use solely with respect to this project, and Apex shall be deemed the author of the Drawing and shall retain all common law, statutory and other reserved rights with respect thereto, including the copyright. The Documents shall not be used on other projects, for additions to this project or for completion of this project by others, except by agreement in writing and with appropriate compensation to Apex.

COMMONWEALTH OF MASSACHUSETTS
CHESTER H. MYERS
ENVIRONMENTAL
NO. 45654
REGISTERED PROFESSIONAL ENGINEER

PROJECT
NEW BEDFORD MARINE COMMERCE TERMINAL

OWNER
MASSACHUSETTS CLEAN ENERGY CENTER
55 SUMMER STREET, 9TH FLOOR
BOSTON, MASSACHUSETTS

NO.	DATE	DESCRIPTION	BY
2.	6-28-12	L.O.W. UPDATE	CWM
1.	12-23-11	FOR CONSTRUCTION	CWM

PROJECT NO.	6690
CADD FILE	B_I_DREDGE
DESIGNED BY	GCD
DRAWN BY	CWM
CHECKED BY	CHM
DATE	8/30/11
DRAWING SCALE	1"=60'

GRAPHIC SCALE
SCALE: 1"=60'
0 30 60 90 150 FEET

SHEET TITLE
INTERMEDIATE DREDGE FOOTPRINT PLAN 1

DRAWING NO.
P-2.3

P:\Jobs\6690 NBH_ Phase IV\PLANS\FINAL_PLANS\100% Submittal\P-2.3-P-2.4_INTER_BOTTOM_DREDGE.dwg

NOTES:

1. MATERIAL TO BE DREDGED AS SHOWN ON CONTRACT DRAWINGS P-2.3 INTERMEDIATE DREDGE FOOTPRINT PLAN 1" AND P-2.4 INTERMEDIATE DREDGE FOOTPRINT PLAN 2" SHALL BE DREDGED AND USED TO CAP THE BORROW PIT CAPPING AREA, THE CAD CELL #1 CAPPING AREA AND THE WINTER FLOUNDTER MITIGATION AREA.
2. MATERIAL TO BE DREDGED AS SHOWN ON CONTRACT DRAWINGS P-2.1 TOP OF DREDGE FOOTPRINT PLAN 1" AND P-2.2 TOP OF DREDGE FOOTPRINT PLAN 2" SHALL BE DREDGED AND DISPOSED INTO CAD CELL #3 BEFORE MATERIAL TO BE DREDGED AS SHOWN ON CONTRACT DRAWINGS P-2.3 INTERMEDIATE DREDGE FOOTPRINT PLAN 1" AND P-2.4 INTERMEDIATE DREDGE FOOTPRINT PLAN 2" IS DREDGED.
3. MATERIAL TO BE DREDGED AS SHOWN ON CONTRACT DRAWINGS P-2.3 INTERMEDIATE DREDGE FOOTPRINT PLAN 1" AND P-2.4 INTERMEDIATE DREDGE FOOTPRINT PLAN 2" SHALL NOT BE DREDGED BEFORE MATERIAL SHOWN ON CONTRACT DRAWINGS P-2.1 TOP OF DREDGE FOOTPRINT PLAN 1" AND P-2.2 TOP OF DREDGE FOOTPRINT PLAN 2" HAS BEEN DREDGED AND DISPOSED INTO CAD CELL #3.
4. ALSO SEE DRAWINGS P-2.1, P-2.2, P-2.4, P-2.5 AND P-2.6.
5. FOR DREDGE CROSS-SECTIONS, SEE DRAWINGS X-2.1 AND X-2.2. FOR LOCATIONS OF DREDGE CROSS-SECTIONS, SEE DRAWINGS P-2.5 AND P-2.6.

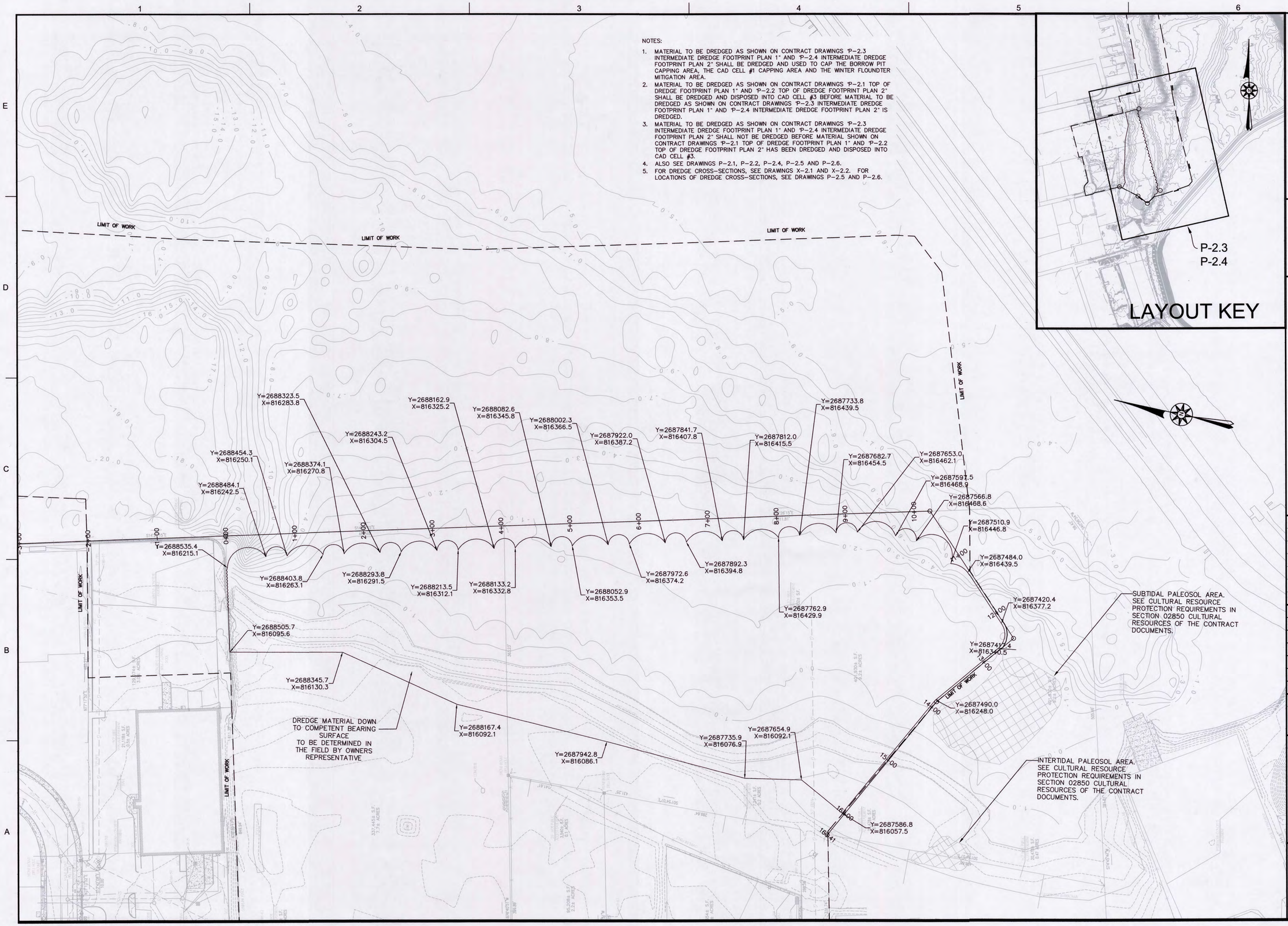

APEX

ROCKVILLE, MD
SOUTH WINDSOR, CT - BOSTON, MA - NEW BEDFORD, MA - HOLYOKE, MA

184 HIGH STREET, SUITE 502
BOSTON, MA 02210

58H CONNECTICUT AVENUE
SOUTH WINDSOR, CT

This drawings prepared by Apex for this project are instruments of Apex's service for use solely with respect to this project, and Apex shall be deemed the author of the Drawing and shall retain all common law, statutory and other reserved rights with respect thereto, including the copyright. The Documents shall not be used on other projects, for additions to this project or for completion of this project by others, except by agreement in writing and with appropriate compensation to Apex.

COMMONWEALTH OF MASSACHUSETTS
CHESTER H. MYERS ENVIRONMENTAL
No. 45654
7/18/12
REGISTERED PROFESSIONAL ENGINEER

PROJECT
NEW BEDFORD MARINE COMMERCE TERMINAL

OWNER
MASSACHUSETTS CLEAN ENERGY CENTER
55 SUMMER STREET, 9TH FLOOR
BOSTON, MASSACHUSETTS

NO.	DATE	DESCRIPTION	BY
2.	6-28-12	L.O.W. UPDATE	CWM
1.	12-23-11	FOR CONSTRUCTION	CWM

PROJECT NO.	6690
CADD FILE	B_I_DREDGE
DESIGNED BY	GCD
DRAWN BY	CWM
CHECKED BY	CHM
DATE	8/30/11
DRAWING SCALE	1"=60'

GRAPHIC SCALE
SCALE: 1"=60'
0 30 60 90 150 FEET

SHEET TITLE
INTERMEDIATE DREDGE FOOTPRINT PLAN 2

DRAWING NO.
P-2.4

P:\jobs\6690 NBH_ Phase IV\PLANS\FINAL_PLANS\100% Submittal\P-2.3-P-2.4_INTER_BOTTOM_DREDGE.dwg

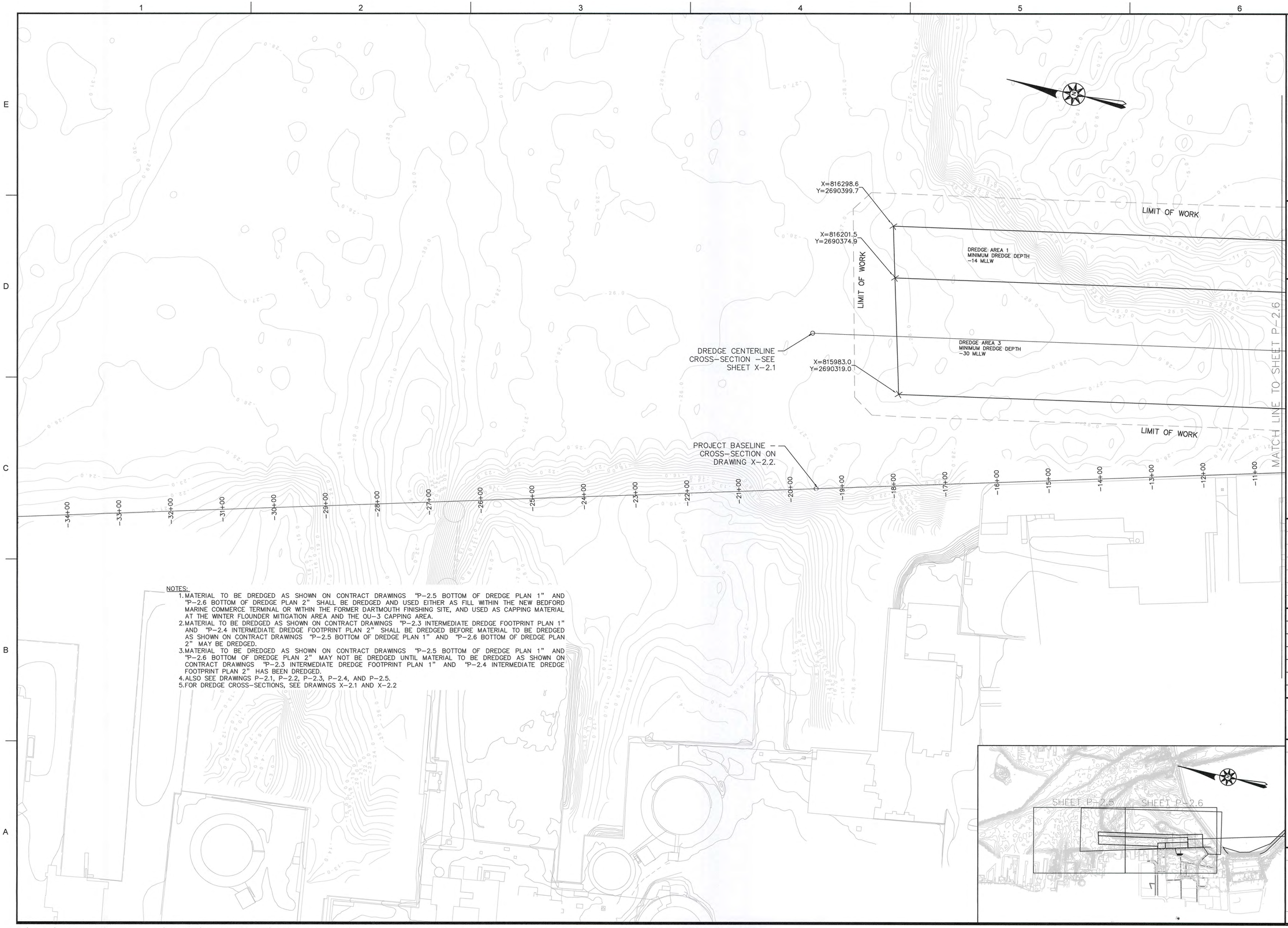

NOTES:

1. MATERIAL TO BE DREDGED AS SHOWN ON CONTRACT DRAWINGS "P-2.5 BOTTOM OF DREDGE PLAN 1" AND "P-2.6 BOTTOM OF DREDGE PLAN 2" SHALL BE DREDGED AND USED EITHER AS FILL WITHIN THE NEW BEDFORD MARINE COMMERCE TERMINAL OR WITHIN THE FORMER DARTMOUTH FINISHING SITE, AND USED AS CAPPING MATERIAL AT THE WINTER FLOUNDER MITIGATION AREA AND THE OU-3 CAPPING AREA.
2. MATERIAL TO BE DREDGED AS SHOWN ON CONTRACT DRAWINGS "P-2.3 INTERMEDIATE DREDGE FOOTPRINT PLAN 1" AND "P-2.4 INTERMEDIATE DREDGE FOOTPRINT PLAN 2" SHALL BE DREDGED BEFORE MATERIAL TO BE DREDGED AS SHOWN ON CONTRACT DRAWINGS "P-2.5 BOTTOM OF DREDGE PLAN 1" AND "P-2.6 BOTTOM OF DREDGE PLAN 2" MAY BE DREDGED.
3. MATERIAL TO BE DREDGED AS SHOWN ON CONTRACT DRAWINGS "P-2.5 BOTTOM OF DREDGE PLAN 1" AND "P-2.6 BOTTOM OF DREDGE PLAN 2" MAY NOT BE DREDGED UNTIL MATERIAL TO BE DREDGED AS SHOWN ON CONTRACT DRAWINGS "P-2.3 INTERMEDIATE DREDGE FOOTPRINT PLAN 1" AND "P-2.4 INTERMEDIATE DREDGE FOOTPRINT PLAN 2" HAS BEEN DREDGED.
4. ALSO SEE DRAWINGS P-2.1, P-2.2, P-2.3, P-2.4, AND P-2.5.
5. FOR DREDGE CROSS-SECTIONS, SEE DRAWINGS X-2.1 AND X-2.2

APEX

ROCKVILLE, MD
SOUTH WINDSOR, CT - BOSTON, MA - NEW BEDFORD, MA - HOLYOKE, MA

184 HIGH STREET, SUITE 502
BOSTON, MA 02210

58H CONNECTICUT AVENUE
SOUTH WINDSOR, CT

This drawings prepared by Apex for this project are instruments of Apex's service for use solely with respect to this project, and Apex shall be deemed the author of the Drawing and shall retain all common law, statutory and other reserved rights with respect thereto, including the copyright. The Documents shall not be used on other projects, for additions to this project or for completion of this project by others, except by agreement in writing and with appropriate compensation to Apex.

COMMONWEALTH OF MASSACHUSETTS
CHESTER H. MYERS
ENVIRONMENTAL
NO. 45654
5/17/13
REGISTERED PROFESSIONAL ENGINEER

PROJECT

NEW BEDFORD
MARINE COMMERCE
TERMINAL

OWNER

MASSACHUSETTS CLEAN ENERGY COUNCIL
55 SUMMER STREET, 9TH FLOOR
BOSTON, MASSACHUSETTS

NO.	DATE	DESCRIPTION	BY

PROJECT NO.	6690
CADD FILE	P_B_DREDGE_P9_10
DESIGNED BY	GCD
DRAWN BY	CWM
CHECKED BY	CHM
DATE	8/30/11
DRAWING SCALE	1"=80'

GRAPHIC SCALE

SCALE: 1"=80'

0 40 80 160

SHEET TITLE

BOTTOM OF
DREDGE
PLAN 1

DRAWING NO.

P-2.5

P:\Jobs\6690 NBH_ Phase IV\PLANS\FINAL_PLANS\100% Submittal\P-2.5-P-2.6_BOTTOM_DREDGE.dwg 5/17/2013 11:11 AM BOSTON CAD USER

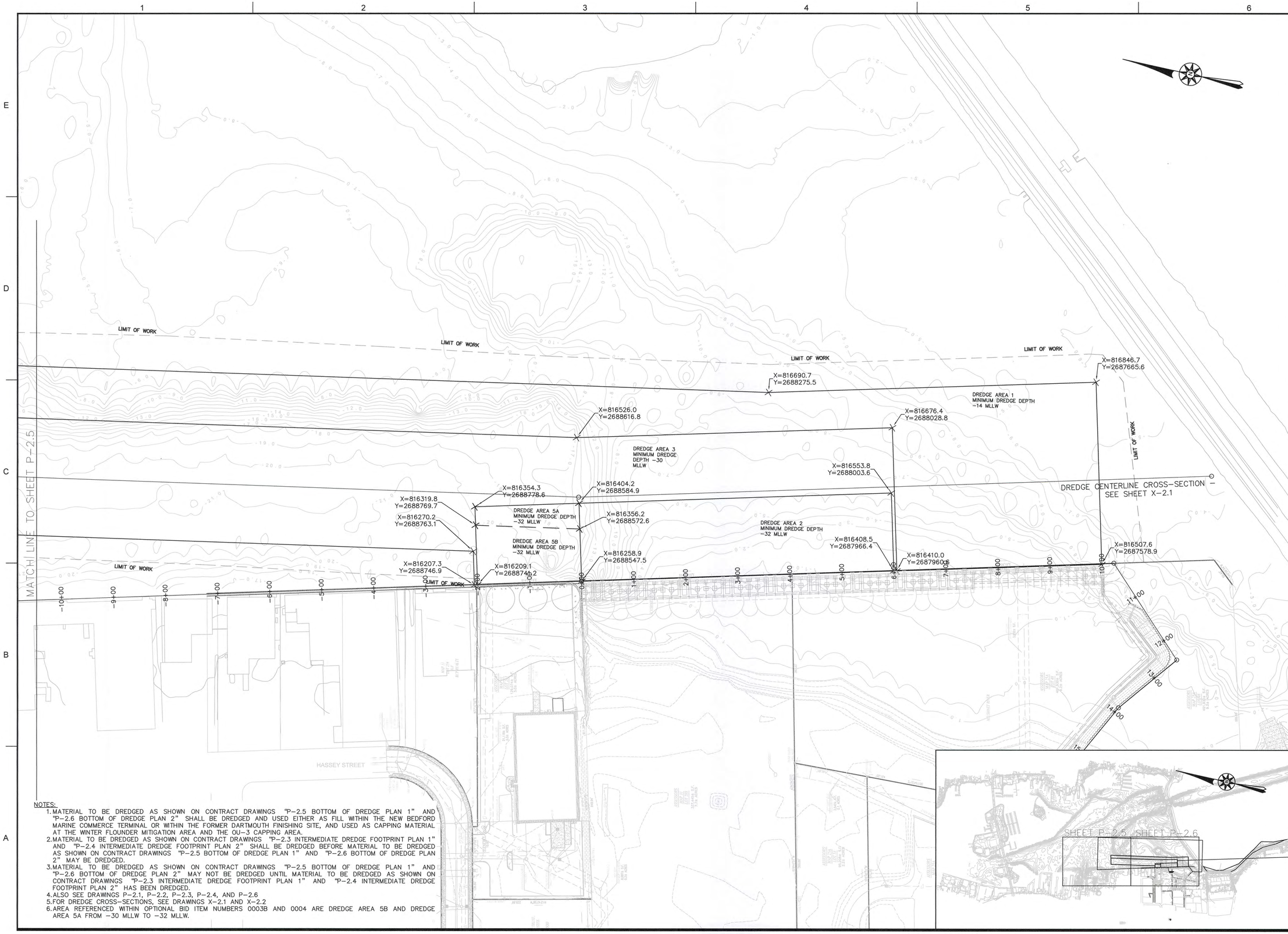

NOTES:

1. MATERIAL TO BE DREDGED AS SHOWN ON CONTRACT DRAWINGS "P-2.5 BOTTOM OF DREDGE PLAN 1" AND "P-2.6 BOTTOM OF DREDGE PLAN 2" SHALL BE DREDGED AND USED EITHER AS FILL WITHIN THE NEW BEDFORD MARINE COMMERCE TERMINAL OR WITHIN THE FORMER DARTMOUTH FINISHING SITE, AND USED AS CAPPING MATERIAL AT THE WINTER FLOUNDER MITIGATION AREA AND THE OU-3 CAPPING AREA.
2. MATERIAL TO BE DREDGED AS SHOWN ON CONTRACT DRAWINGS "P-2.3 INTERMEDIATE DREDGE FOOTPRINT PLAN 1" AND "P-2.4 INTERMEDIATE DREDGE FOOTPRINT PLAN 2" SHALL BE DREDGED BEFORE MATERIAL TO BE DREDGED AS SHOWN ON CONTRACT DRAWINGS "P-2.5 BOTTOM OF DREDGE PLAN 1" AND "P-2.6 BOTTOM OF DREDGE PLAN 2" MAY BE DREDGED.
3. MATERIAL TO BE DREDGED AS SHOWN ON CONTRACT DRAWINGS "P-2.5 BOTTOM OF DREDGE PLAN 1" AND "P-2.6 BOTTOM OF DREDGE PLAN 2" MAY NOT BE DREDGED UNTIL MATERIAL TO BE DREDGED AS SHOWN ON CONTRACT DRAWINGS "P-2.3 INTERMEDIATE DREDGE FOOTPRINT PLAN 1" AND "P-2.4 INTERMEDIATE DREDGE FOOTPRINT PLAN 2" HAS BEEN DREDGED.
4. ALSO SEE DRAWINGS P-2.1, P-2.2, P-2.3, P-2.4, AND P-2.6
5. FOR DREDGE CROSS-SECTIONS, SEE DRAWINGS X-2.1 AND X-2.2
6. AREA REFERENCED WITHIN OPTIONAL BID ITEM NUMBERS 0003B AND 0004 ARE DREDGE AREA 5B AND DREDGE AREA 5A FROM -30 MLLW TO -32 MLLW.

APEX

ROCKVILLE, MD
SOUTH WINDSOR, CT - BOSTON, MA -
NEW BEDFORD, MA - HOLYOKE, MA

184 HIGH STREET, SUITE 502
BOSTON, MA 02210

58H CONNECTICUT AVENUE
SOUTH WINDSOR, CT

This drawings prepared by Apex for this project are instruments of Apex's service for use solely with respect to this project, and Apex shall be deemed the author of the Drawing and shall retain all common law, statutory and other reserved rights with respect thereto, including the copyright. The Documents shall not be used on other projects, for additions to this project or for completion of this project by others, except by agreement in writing and with appropriate compensation to Apex.

COMMONWEALTH OF MASSACHUSETTS
CHESTER H. MYERS
ENVIRONMENTAL
NO. 45884
8/17/13
REGISTERED PROFESSIONAL ENGINEER

PROJECT
NEW BEDFORD MARINE COMMERCE TERMINAL

OWNER
MASSACHUSETTS CLEAN ENERGY COUNCIL
55 SUMMER STREET, 9TH FLOOR
BOSTON, MASSACHUSETTS

NO.	DATE	DESCRIPTION	BY

PROJECT NO.	6690
CADD FILE	B_I_DREDGE
DESIGNED BY	GCD
DRAWN BY	CWM
CHECKED BY	CHM
DATE	8/30/11
DRAWING SCALE	1"=80'

GRAPHIC SCALE
SCALE: 1"=80'
0 40 80 160

SHEET TITLE
BOTTOM OF DREDGE PLAN 2

DRAWING NO.
P-2.6

NOTES:
1. MATERIAL TO BE DREDGED AS SHOWN ON THE CONTRACT DRAWING "P-2.7 GIFFORD STREET CHANNEL DREDGE" SHALL BE DISPOSED WITHIN CAD CELL #3 AS SHOWN ON THE CONTRACT DRAWING "P-3.4 CAD CELL #3 DISPOSAL PLAN".
2. CROSS SECTIONS ARE DEPICTED ON SHEET X-2.3.

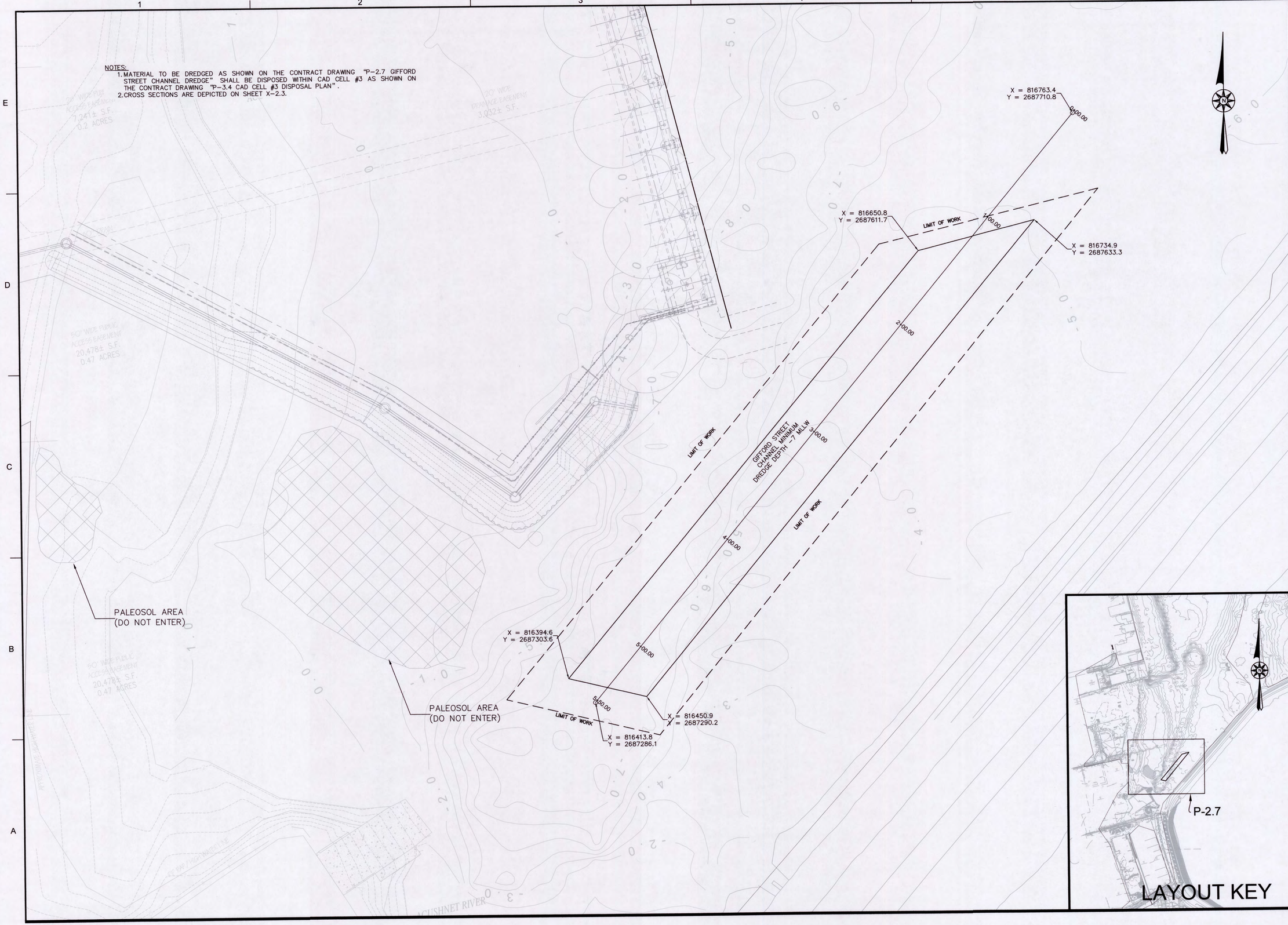

APEX

ROCKVILLE, MD
SOUTH WINDSOR, CT - BOSTON, MA - NEW BEDFORD, MA - HOLYOKE, MA

184 HIGH STREET, SUITE 502
BOSTON, MA 02210

58H CONNECTICUT AVENUE
SOUTH WINDSOR, CT

This drawings prepared by Apex for this project are instruments of Apex's service for use solely with respect to this project, and Apex shall be deemed the author of the Drawing and shall retain all common law, statutory and other reserved rights with respect thereto, including the copyright. The Documents shall not be used on other projects, for additions to this project or for completion of this project by others, except by agreement in writing and with appropriate compensation to Apex.

COMMONWEALTH OF MASSACHUSETTS
CHESTER H. MYERS
ENVIRONMENTAL
NO. 45654
REGISTERED
PROFESSIONAL ENGINEER

PROJECT
NEW BEDFORD
MARINE COMMERCE
TERMINAL

OWNER
MASSACHUSETTS CLEAN ENERGY CENTER
55 SUMMER STREET, 9TH FLOOR
BOSTON, MA

NO.	DATE	DESCRIPTION	BY
1.	12-23-11	FOR CONSTRUCTION	CHM

PROJECT NO.	6690
CADD FILE	GIFFORD_ST
DESIGNED BY	CWM
DRAWN BY	CWM
CHECKED BY	CHM
DATE	8-30-11
DRAWING SCALE	1"=30'

GRAPHIC SCALE
SCALE: 1"=30'
0 15 30 60

SHEET TITLE
GIFFORD
STREET
CHANNEL
DREDGE

DRAWING NO.
P-2.7

NOTES:

1. MATERIAL TO BE DREDGED AS SHOWN ON THE CONTRACT DRAWINGS P-2.8 MOORING MITIGATION AREA PLAN" SHALL BE DISPOSED WITHIN CAD CELL #3 AS SHOWN ON THE CONTRACT DRAWING P-3.4 CAD CELL #3 DISPOSAL PLAN.
2. MOORING MITIGATION CROSS SECTIONS ARE DEPICTED ON SHEET X-2.4.

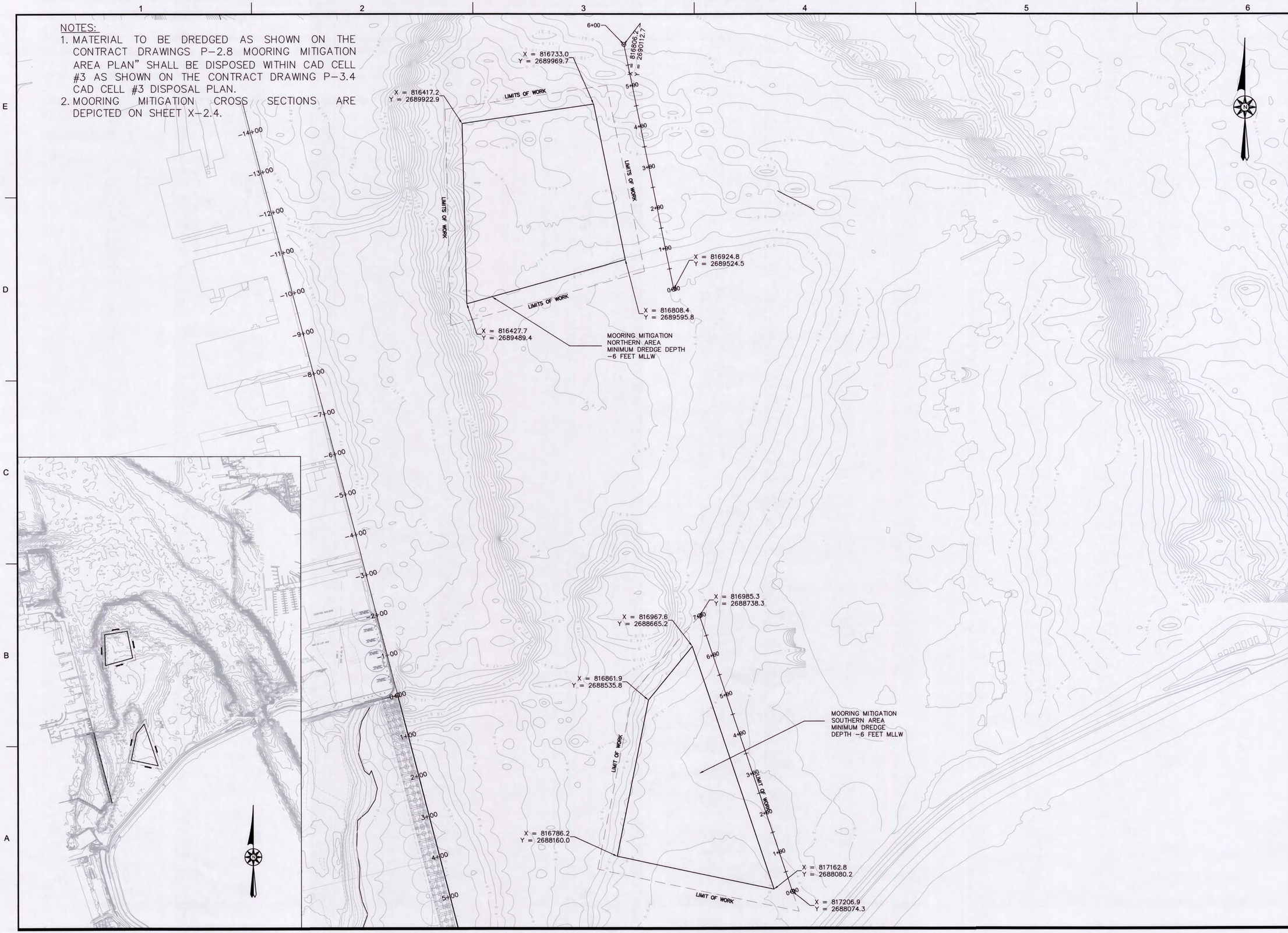

APEX

ROCKVILLE, MD
SOUTH WINDSOR, CT - BOSTON, MA - NEW BEDFORD, MA - HOLYOKE, MA

184 HIGH STREET, SUITE 502
BOSTON, MA 02210

58H CONNECTICUT AVENUE
SOUTH WINDSOR, CT

This drawing prepared by Apex for this project are instruments of Apex's service for use solely with respect to this project, and Apex shall be deemed the author of the Drawing and shall retain all common law, statutory and other reserved rights with respect thereto, including the copyright. The Documents shall not be used on other projects, for additions to this project or for completion of this project by others, except by agreement in writing and with appropriate compensation to Apex.,

COMMONWEALTH OF MASSACHUSETTS
CHESTER H. MYERS
ENVIRONMENTAL
NO. 45554
REGISTERED
PROFESSIONAL ENGINEER

PROJECT
NEW BEDFORD MARINE COMMERCE TERMINAL

OWNER
MASSACHUSETTS CLEAN ENERGY CENTER
55 SUMMER STREET, 9TH FLOOR
BOSTON, MA

NO.	DATE	DESCRIPTION	BY
2.	6-8-12	NORTH AREA UPDATE	CWM
1.	12-23-11	FOR CONSTRUCTION	CHM

PROJECT NO.	6690
CADD FILE	MOORING_MIT
DESIGNED BY	CWM
DRAWN BY	CWM
CHECKED BY	CHM
DATE	8-26-11
DRAWING SCALE	1"=100'

GRAPHIC SCALE
SCALE: 1"=100'
0 50 100 200

SHEET TITLE

MOORING MITIGATION AREA PLAN

DRAWING NO.

P-2.8

P:\Jobs\6690 NBH_ Phase IV\PLANS\FINAL_PLANS\100% Submittal\P-2.8-X-2.4_MOORING_MITIGATION.dwg

NOTES:
1. PHOTOVOLTAIC CELLS TO BE MOUNTED AND CONNECTED TO DAY BOARD PER MANUFACTURES SPECIFICATIONS.
2. FOUR (4) 1/2 INCH HOT DIPPED GALVANIZED THROUGH BOLTS TO BE USED TO SECURE DAY BOARD TO CONCRETE FILLED STEEL PILE.
3. RADIO CONTROLLED PHOTOVOLTAIC CELL AND LED TO BE ADDED TO THE TOP OF EACH NUN.
4. NUNS SHALL BE PAINTED RED, CANS SHALL BE PAINTED ORANGE, EXCEPT FOR CAN AT 6+00, WHICH SHALL BE PAINTED YELLOW.
5. BOLLARD AT 6+00 TO BE PAINTED YELLOW.
6. CONTRACTOR SHALL PROVIDE SIGN WHICH STATES "CAUTION: DRAFT SHALLOWS SOUTH OF THIS POINT". SEE SECTION 02500 FOR SIGN SPECIFICATIONS, SIGN SHALL BE LOCATED BETWEEN PILE LINES 38 AND 39, ATTACHED TO EASTERN FACE OF BULKHEAD, WITH TOP 6" BELOW EDGE OF UTILITY TRENCH.
7. CONDITION AND LOCATION OF ALL AIDS TO NAVIGATION (NUNS, CANS, PAINTED BOLLARD, DAY BOARDS AND SIGN) TO BE INSPECTED TWICE PER YEAR AND SHALL ALSO BE INSPECTED IF ANY AIDS APPEAR TO BE OUT OF ALIGNMENT, DAMAGED, OR MISSING. SHOULD AN AIDS TO NAVIGATION BE NOTED TO BE OUT OF LOCATION, THEY SHALL BE RELOCATED TO THEIR CORRECT LOCATION. SHOULD AN AID TO NAVIGATION BE MISSING, IT SHALL BE REPLACED. SHOULD AN AID BE DAMAGED, INCLUDING IF PAINT IS FADING OR SEPARATING FROM ANY AID TO NAVIGATION, THE AID SHALL BE REPAINTED OR REPAIRED IMMEDIATELY.

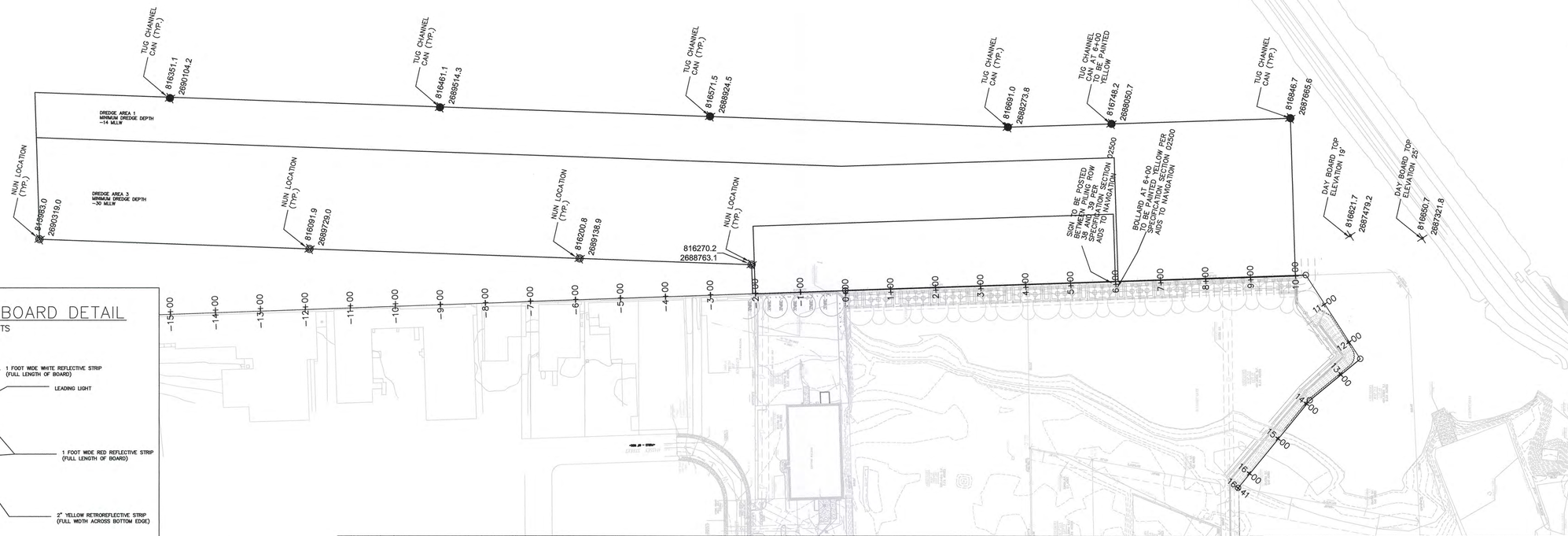

TYPICAL DAY BOARD DETAIL
NTS

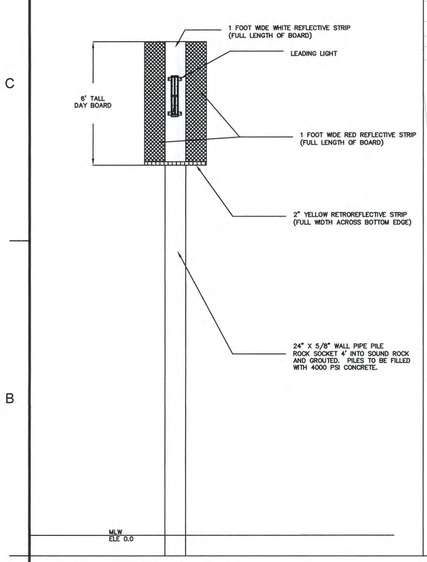

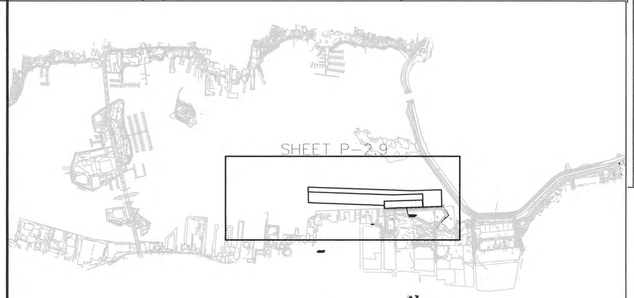

TYPICAL TUG CHANNEL CAN DETAIL
NTS

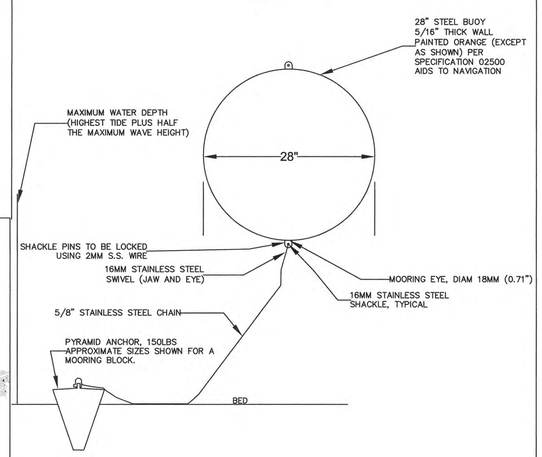

TYPICAL NUN DETAIL
NTS

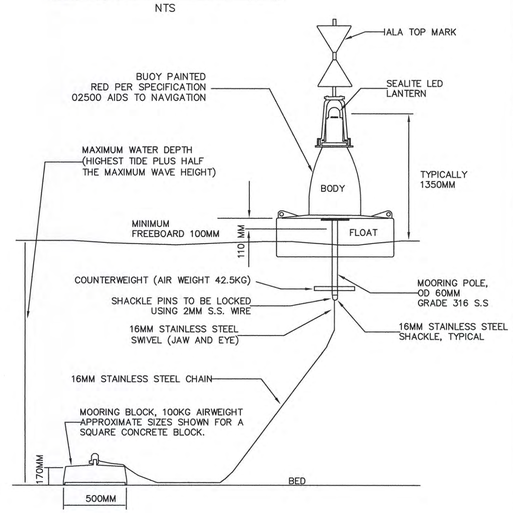

LEADING LIGHT DETAIL
NTS

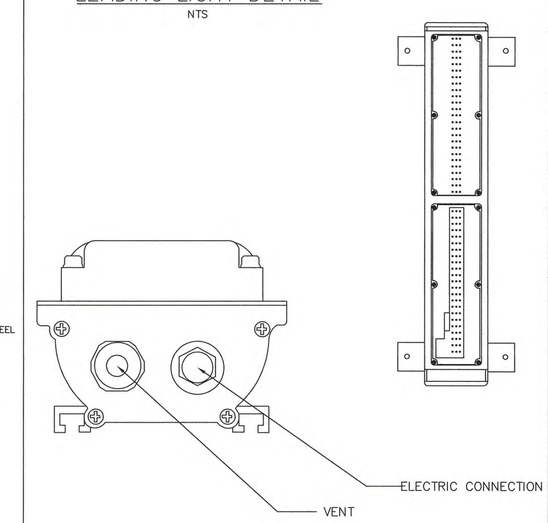

APEX

ROCKVILLE, MD
SOUTH WINDSOR, CT - BOSTON, MA - NEW BEDFORD, MA - HOLYOKE, MA

184 HIGH STREET, SUITE 502
BOSTON, MA 02210

58H CONNECTICUT AVENUE
SOUTH WINDSOR, CT

This drawings prepared by Apex for this project are instruments of Apex's service for use solely with respect to this project, and Apex shall be deemed the author of the Drawing and shall retain all common law, statutory and other reserved rights with respect thereto, including the copyright. The Documents shall not be used on other projects, for additions to this project or for completion of this project by others, except by agreement in writing and with appropriate compensation to Apex.

COMMONWEALTH OF MASSACHUSETTS
CHESTER J. MYERS
ENVIRONMENTAL
NO. 45654
8/30/11
REGISTERED PROFESSIONAL ENGINEER

PROJECT
NEW BEDFORD MARINE COMMERCE TERMINAL

OWNER
MASSACHUSETTS CLEAN ENERGY CENTER
55 SUMMER STREET, 9TH FLOOR
BOSTON, MASSACHUSETTS

NO.	DATE	DESCRIPTION	BY

PROJECT NO.	6690
CADD FILE	B_I_DREDGE
DESIGNED BY	GCD
DRAWN BY	CWM
CHECKED BY	CHM
DATE	8/30/11
DRAWING SCALE	1"=125'

GRAPHIC SCALE
SCALE: 1"=125'
0 125 250

SHEET TITLE
NAVIGATIONAL AIDS

DRAWING NO.
P-2.9

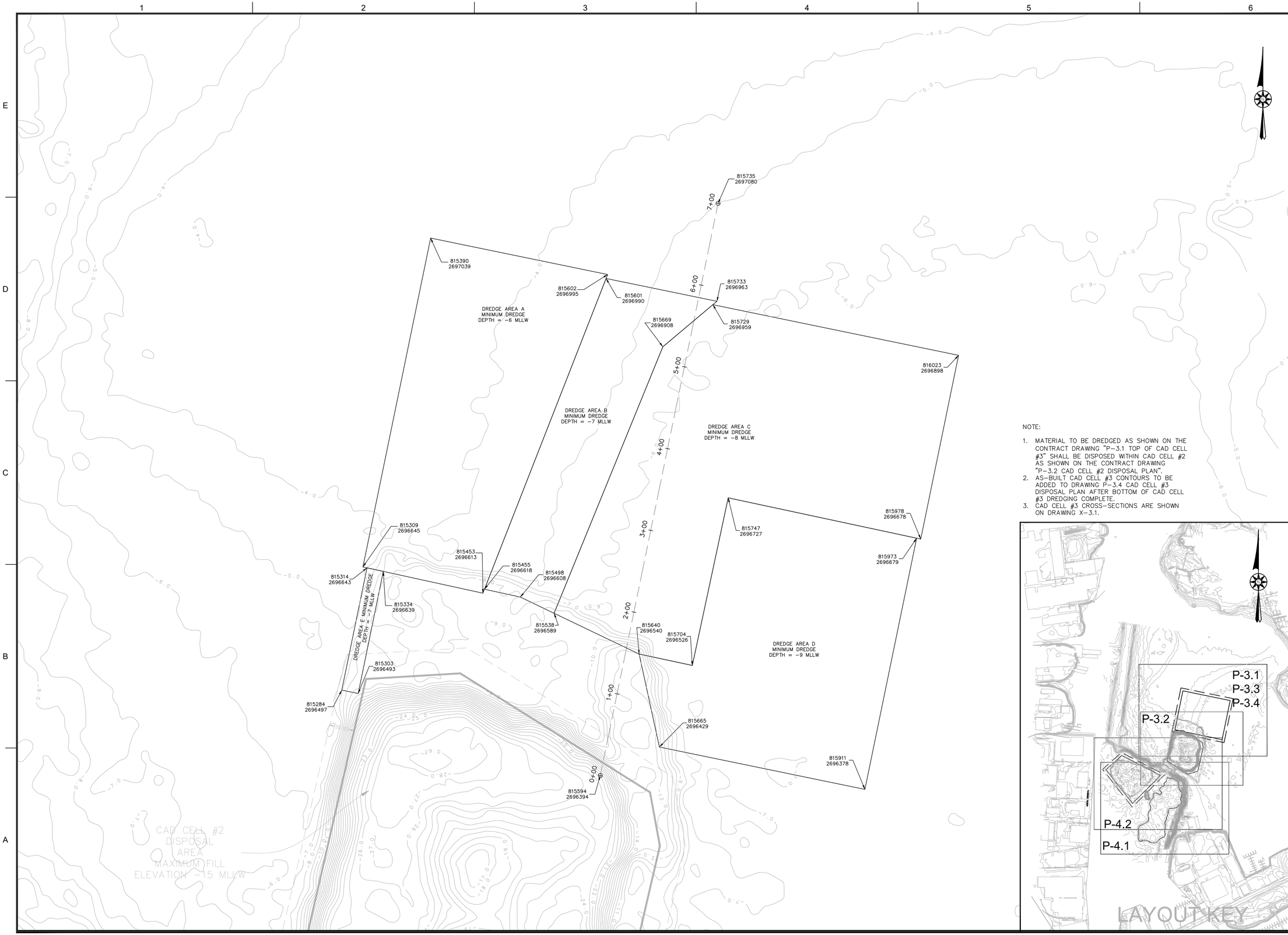

NOTE:

1. MATERIAL TO BE DREDGED AS SHOWN ON THE CONTRACT DRAWING "P-3.1 TOP OF CAD CELL #3" SHALL BE DISPOSED WITHIN CAD CELL #2 AS SHOWN ON THE CONTRACT DRAWING "P-3.2 CAD CELL #2 DISPOSAL PLAN".
2. AS-BUILT CAD CELL #3 CONTOURS TO BE ADDED TO DRAWING P-3.4 CAD CELL #3 DISPOSAL PLAN AFTER BOTTOM OF CAD CELL #3 DREDGING COMPLETE.
3. CAD CELL #3 CROSS-SECTIONS ARE SHOWN ON DRAWING X-3.1.

APEX
ROCKVILLE, MD
SOUTH WINDSOR, CT - BOSTON, MA -
NEW BEDFORD, MA - HOLYOKE, MA

184 HIGH STREET, SUITE 502
BOSTON, MA 02210

58H CONNECTICUT AVENUE
SOUTH WINDSOR, CT

This drawings prepared by Apex for this project are instruments of Apex's service for use solely with respect to this project, and Apex shall be deemed the author of the Drawing and shall retain all common law, statutory and other reserved rights with respect thereto including the copyright. The Documents shall not be used on other projects, for additions to this project or for completion of this project by others, except by agreement in writing and with appropriate compensation to Apex.

CHRISTOPHER MORRIS ENVIRONMENTAL No. 48653 STATE OF MAINE

12/5/12

PROJECT

NEW BEDFORD
MARINE COMMERCE
TERMINAL

OWNER

MASSACHUSETTS CLEAN ENERGY CENTER
55 SUMMER STREET, 9TH FLOOR
BOSTON, MASSACHUSETTS

NO.	DATE	DESCRIPTION	BY
1.	12-23-11	FOR CONSTRUCTION	CHM

PROJECT NO.	6690
CADD FILE	P-3.1-P-3.4_P-4.1-P-4.
DESIGNED BY	GCD
DRAWN BY	GCD
CHECKED BY	CMM
DATE	08/04/2011
DRAWING SCALE	1"=50'

GRAPHIC SCALE

SCALE: 1"=50'

0 25 50 75 125 FEET

SHEET TITLE

TOP OF CAD #3

DRAWING NO.

P-3.1

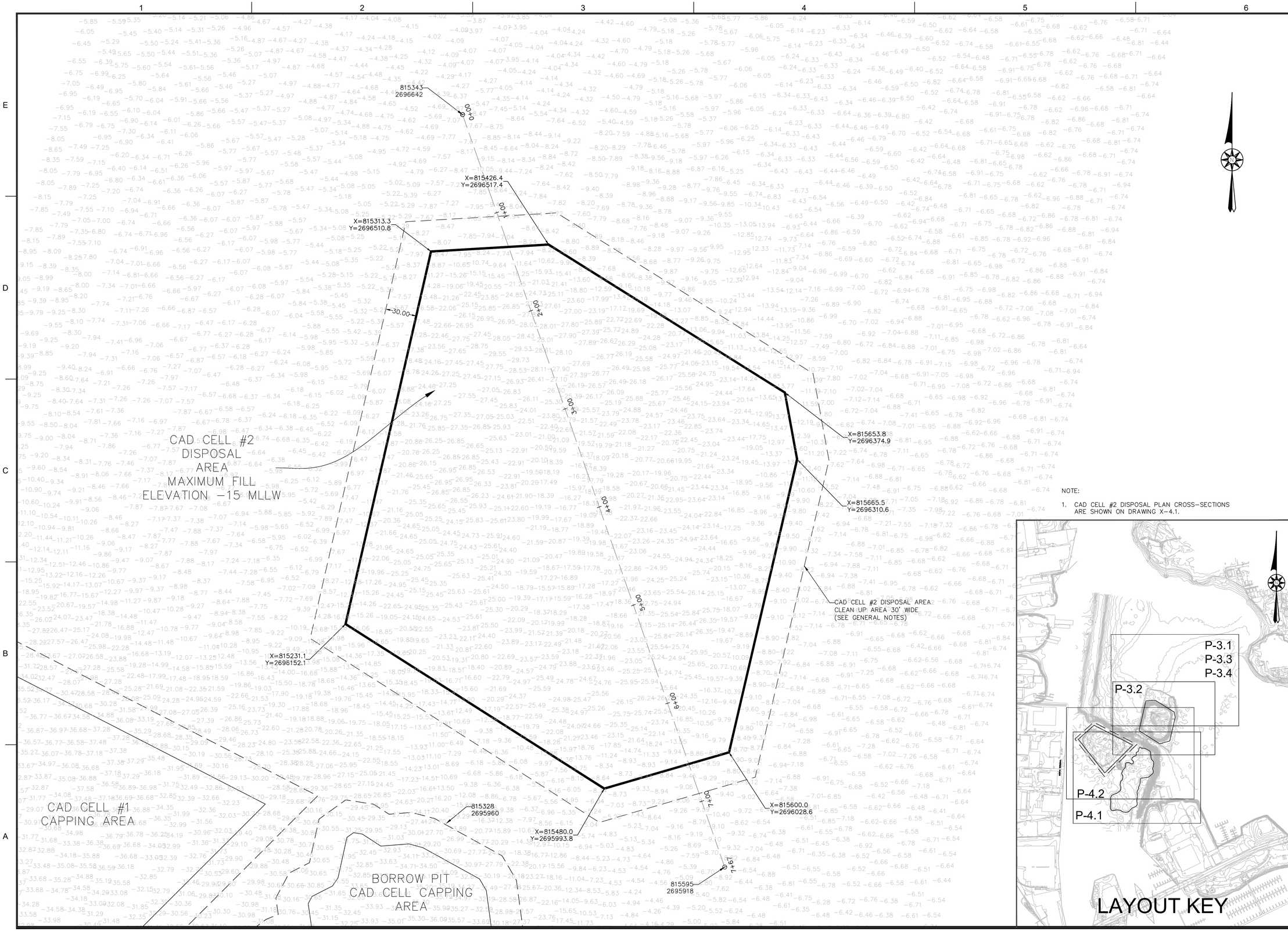

NOTE:

1. CAD CELL #2 DISPOSAL PLAN CROSS-SECTIONS ARE SHOWN ON DRAWING X-4.1.

APEX

ROCKVILLE, MD
SOUTH WINDSOR, CT - BOSTON, MA -
NEW BEDFORD, MA - HOLYOKE, MA

184 HIGH STREET, SUITE 502
BOSTON, MA 02210

58H CONNECTICUT AVENUE
SOUTH WINDSOR, CT

This drawings prepared by Apex for this project are instruments of Apex's service for use solely with respect to this project, and Apex shall be deemed the author of the Drawing and shall retain all common law, statutory and other reserved rights with respect thereto, including the copyright. The Documents shall not be used on other projects, for additions to this project or for completion of this project by others, except by agreement in writing and with appropriate compensation to Apex.

CHRISTOPHER MORRIS ENVIRONMENTAL No. 48683 COMMONWEALTH OF MASSACHUSETTS

12/5/12

PROJECT

NEW BEDFORD
MARINE COMMERCE
TERMINAL

OWNER

MASSACHUSETTS CLEAN ENERGY CENTER
55 SUMMER STREET, 9TH FLOOR
BOSTON, MASSACHUSETTS

NO.	DATE	DESCRIPTION	BY
1.	12-23-11	FOR CONSTRUCTION	CHM

PROJECT NO.	6690
CADD FILE	P-12-P16_P26_X-4 PR
DESIGNED BY	GCD
DRAWN BY	GCD
CHECKED BY	CMM
DATE	08/25/2011
DRAWING SCALE	1"=40'

GRAPHIC SCALE

SCALE: 1"=40'

0 20 40 80 160 FEET

SHEET TITLE

CAD CELL #2
DISPOSAL
PLAN

DRAWING NO.

P-3.2

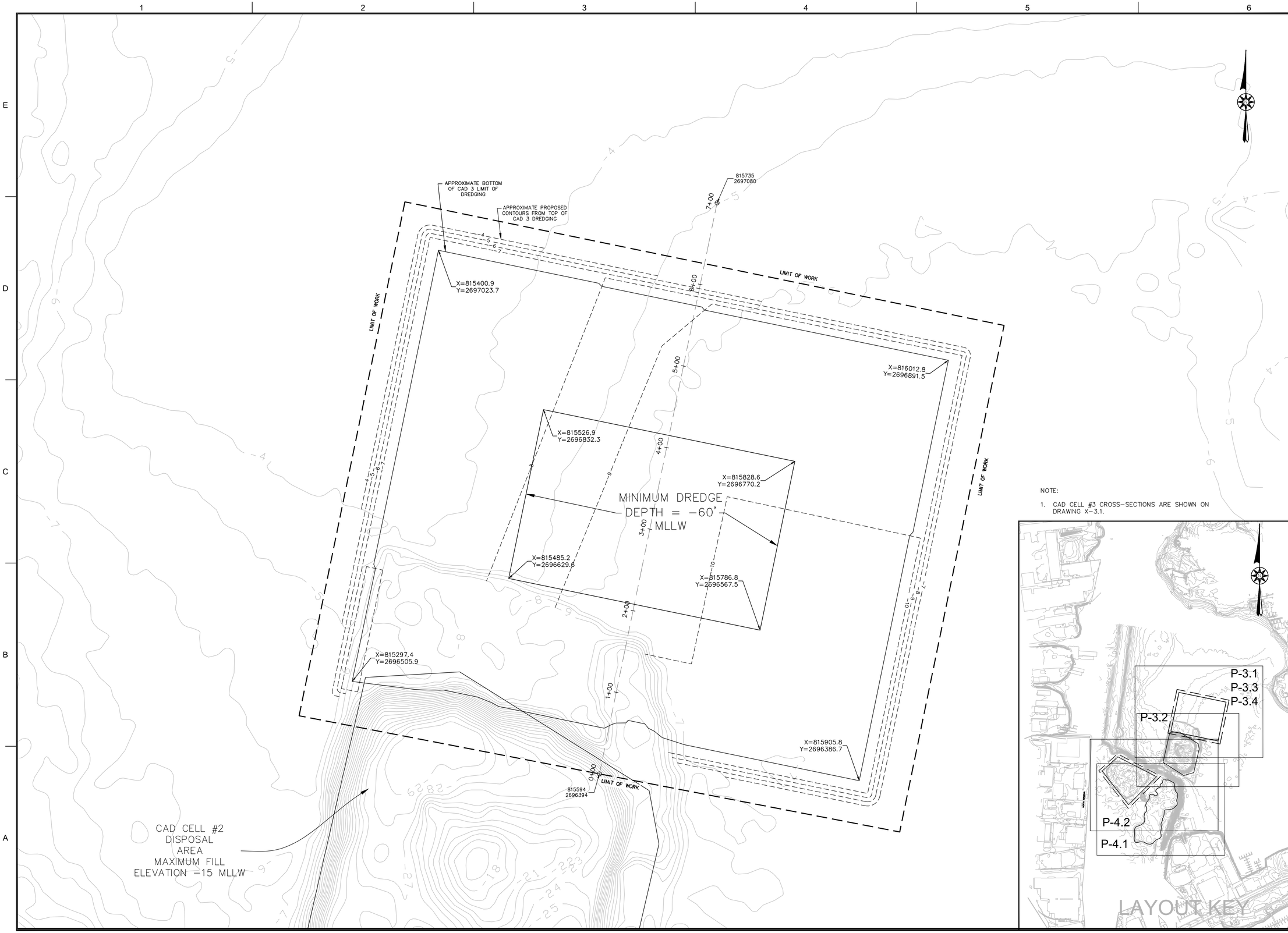

NOTE:

1. CAD CELL #3 CROSS-SECTIONS ARE SHOWN ON DRAWING X-3.1.

APEX

ROCKVILLE, MD
SOUTH WINDSOR, CT - BOSTON, MA - NEW BEDFORD, MA - HOLYOKE, MA

184 HIGH STREET, SUITE 502
BOSTON, MA 02210

58H CONNECTICUT AVENUE
SOUTH WINDSOR, CT

This drawings prepared by Apex for this project are instruments of Apex's service for use solely with respect to this project, and Apex shall be deemed the author of the Drawing and shall retain all common law, statutory and other reserved rights with respect thereto, including the copyright. The Documents shall not be used on other projects, for additions to this project or for completion of this project by others, except by agreement in writing and with appropriate compensation to Apex.

CHRISTOPHER MORRIS ENVIRONMENTAL No. 48692

12/4/12

PROJECT

NEW BEDFORD MARINE COMMERCE TERMINAL

OWNER

MASSACHUSETTS CLEAN ENERGY CENTER
55 SUMMER STREET, 9TH FLOOR
BOSTON, MASSACHUSETTS

NO.	DATE	DESCRIPTION	BY
1.	12-23-11	FOR CONSTRUCTION	CHM

PROJECT NO.	6690
CADD FILE	P-12-P16_P-26_X-4 PF
DESIGNED BY	GCD
DRAWN BY	GCD
CHECKED BY	CMM
DATE	08/04/2011
DRAWING SCALE	1"=50'

GRAPHIC SCALE

SCALE: 1"=50'

0 25 50 75 125 FEET

SHEET TITLE

BOTTOM OF CAD #3

DRAWING NO.

P-3.3

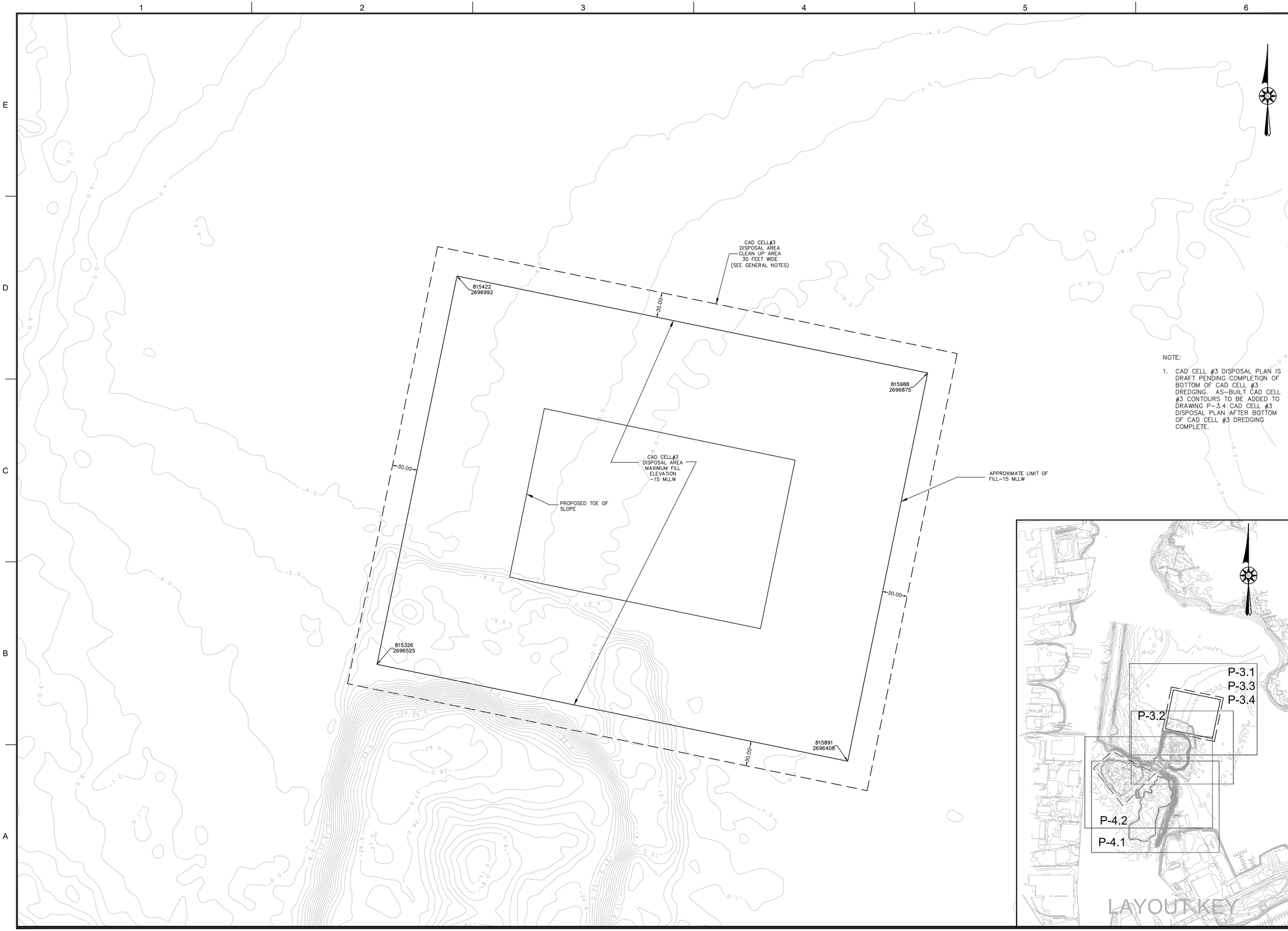

NOTE:

1. CAD CELL #3 DISPOSAL PLAN IS DRAFT PENDING COMPLETION OF BOTTOM OF CAD CELL #3 DREDGING. AS-BUILT CAD CELL #3 CONTOURS TO BE ADDED TO DRAWING P-3.4 CAD CELL #3 DISPOSAL PLAN AFTER BOTTOM OF CAD CELL #3 DREDGING COMPLETE.

APEX

ROCKVILLE, MD
SOUTH WINDSOR, CT - BOSTON, MA -
NEW BEDFORD, MA - HOLYOKE, MA

184 HIGH STREET, SUITE 502
BOSTON, MA 02210

58H CONNECTICUT AVENUE
SOUTH WINDSOR, CT

This drawings prepared by Apex for this project are instruments of Apex's service for use solely with respect to this project, and Apex shall be deemed the author of the Drawing and shall retain all common law, statutory and other reserved rights with respect thereto, including the copyright. The Documents shall not be used on other projects, for additions to this project or for completion of this project by others, except by agreement in writing and with appropriate compensation to Apex.

CHRISTOPHER M. MORRIS ENVIRONMENTAL No. 48692

12/4/12

PROJECT

NEW BEDFORD
MARINE COMMERCE
TERMINAL

OWNER

MASSACHUSETTS CLEAN ENERGY CENTER
55 SUMMER STREET, 9TH FLOOR
BOSTON, MASSACHUSETTS

NO.	DATE	DESCRIPTION	BY
1.	12-23-11	FOR CONSTRUCTION	CHM

PROJECT NO.	6690
CADD FILE	
DESIGNED BY	GCD
DRAWN BY	GCD
CHECKED BY	CMM
DATE	08/25/2011
DRAWING SCALE	1"=50'

GRAPHIC SCALE

SCALE: 1"=50'

0 25 50 100 175 FEET

SHEET TITLE

CAD CELL #3 DISPOSAL PLAN

DRAWING NO.

P-3.4

63 OF 97

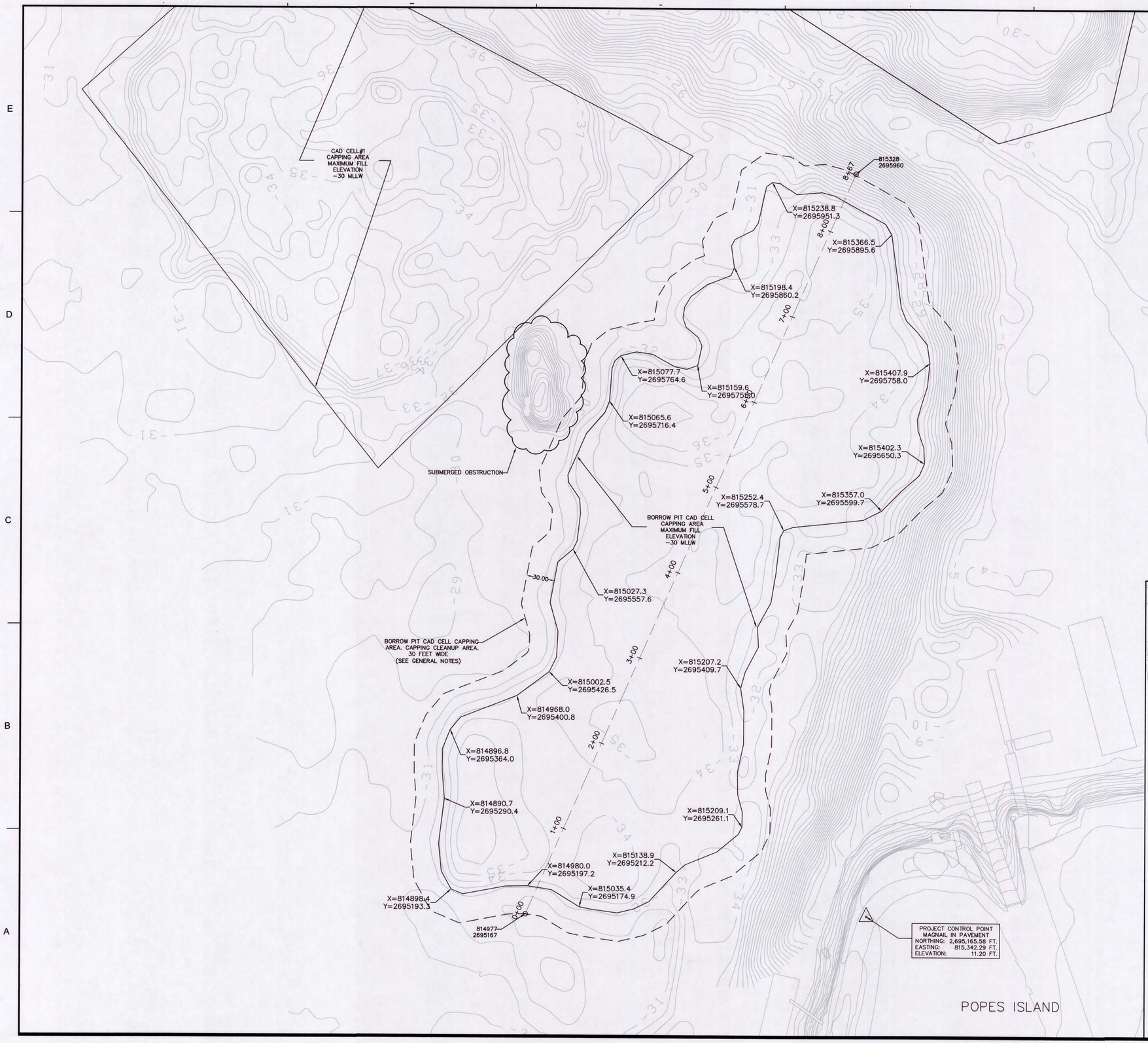

NOTES:

1. BORROW PIT PLAN CROSS-SECTIONS ARE SHOWN ON DRAWING X-4.1.
2. BORROW PIT DXF AND OR DWG FILE SHALL BE PROVIDED TO THE CONTRACTOR UPON WRITTEN REQUEST.

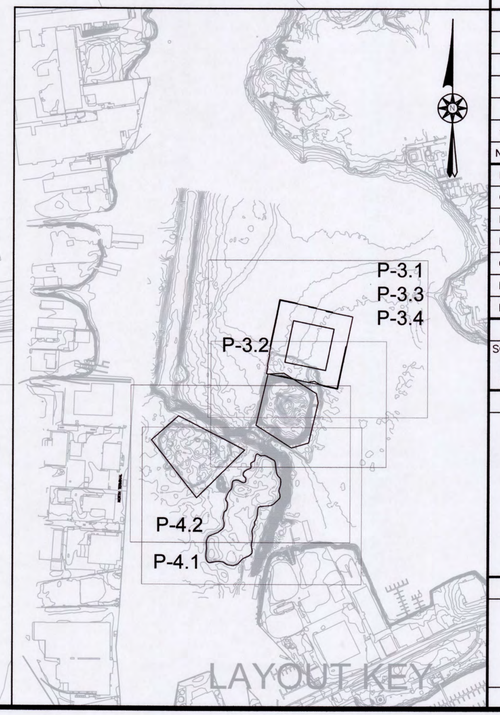

APEX

ROCKVILLE, MD
SOUTH WINDSOR, CT - BOSTON, MA -
NEW BEDFORD, MA - HOLYOKE, MA

184 HIGH STREET, SUITE 502
BOSTON, MA 02210

58H CONNECTICUT AVENUE
SOUTH WINDSOR, CT

This drawings prepared by Apex for this project are instruments of Apex's service for use solely with respect to this project, and Apex shall be deemed the author of the Drawing and shall retain all common law, statutory and other reserved rights with respect thereto including the copyright. The Documents shall not be used on other projects, for additions to this project or for completion of this project by others, except by agreement in writing and with appropriate compensation to Apex.

COMMONWEALTH OF MASSACHUSETTS
CHESTER H. MYERS
ENVIRONMENTAL
NO. 45654
REGISTERED
PROFESSIONAL ENGINEER
11/8/11

PROJECT
NEW BEDFORD
MARINE COMMERCE
TERMINAL

OWNER
MASSACHUSETTS CLEAN ENERGY CENTER
55 SUMMER STREET, 9TH FLOOR
BOSTON, MASSACHUSETTS

NO.	DATE	DESCRIPTION	BY
1.	12-23-11	FOR CONSTRUCTION	CHM

PROJECT NO.	6690
CADD FILE	P-12-P16_P26_X-4 PR
DESIGNED BY	GCD
DRAWN BY	GCD
CHECKED BY	CHM
DATE	08/04/2011
DRAWING SCALE	1"=50'

GRAPHIC SCALE

SCALE: 1"=50'

0 25 50 75 125 FEET

SHEET TITLE

BORROW PIT CAPPING PLAN

DRAWING NO.

P-4.1

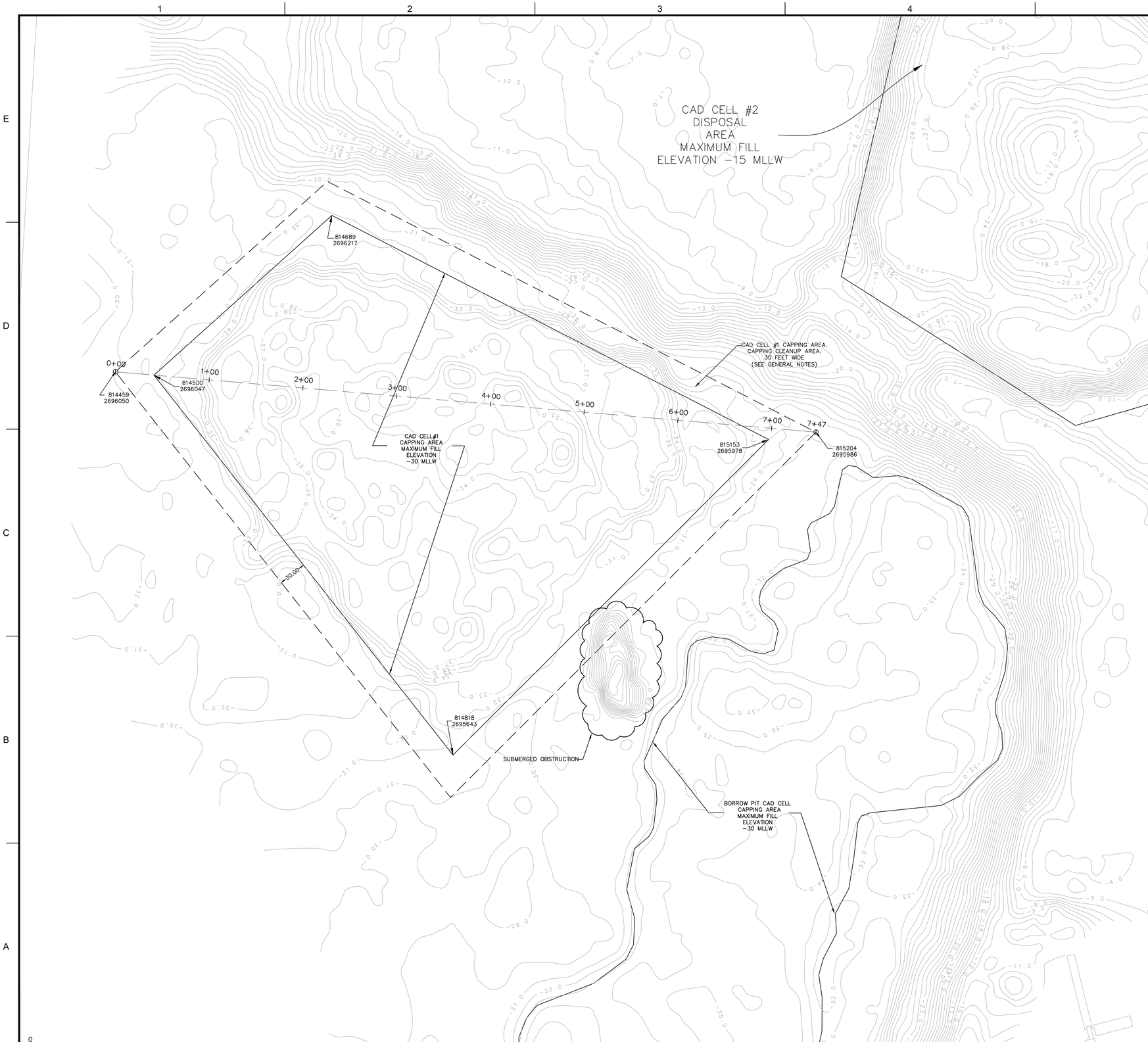

NOTE:

1. CAD CELL #1 CAPPING PLAN CROSS-SECTIONS ARE SHOWN ON DRAWING X-4.1.

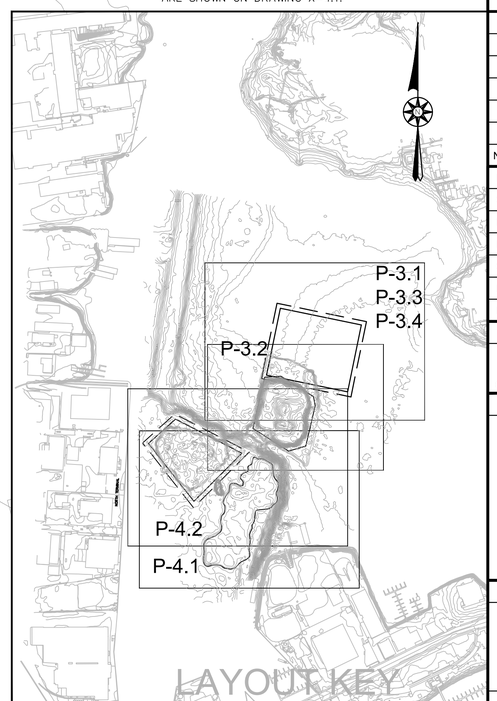

APEX

ROCKVILLE, MD
SOUTH WINDSOR, CT - BOSTON, MA - NEW BEDFORD, MA - HOLYOKE, MA

184 HIGH STREET, SUITE 502
BOSTON, MA 02210

58H CONNECTICUT AVENUE
SOUTH WINDSOR, CT

This drawings prepared by Apex for this project are instruments of Apex's service for use solely with respect to this project, and Apex shall be deemed the author of the Drawing and shall retain all common law, statutory and other reserved rights with respect thereto, including the copyright. The Documents shall not be used on other projects, for additions to this project or for completion of this project by others, except by agreement in writing and with appropriate compensation to Apex.

CHRISTOPHER MORRIS ENVIRONMENTAL No. 48653

12/5/12

PROJECT

NEW BEDFORD
MARINE COMMERCE
TERMINAL

OWNER

MASSACHUSETTS CLEAN ENERGY CENTER
55 SUMMER STREET, 9TH FLOOR
BOSTON, MASSACHUSETTS

NO.	DATE	DESCRIPTION	BY
1.	12-23-11	FOR CONSTRUCTION	CHM

PROJECT NO.	6690
CADD FILE	P-12-P16_P26_X-4 PR
DESIGNED BY	GCD
DRAWN BY	GCD
CHECKED BY	CHM
DATE	08/04/2011
DRAWING SCALE	1"=50'

GRAPHIC SCALE

SCALE: 1"=50'

0 25 50 75 125 FEET

SHEET TITLE

CAD CELL #1
CAPPING PLAN

DRAWING NO.

P-4.2

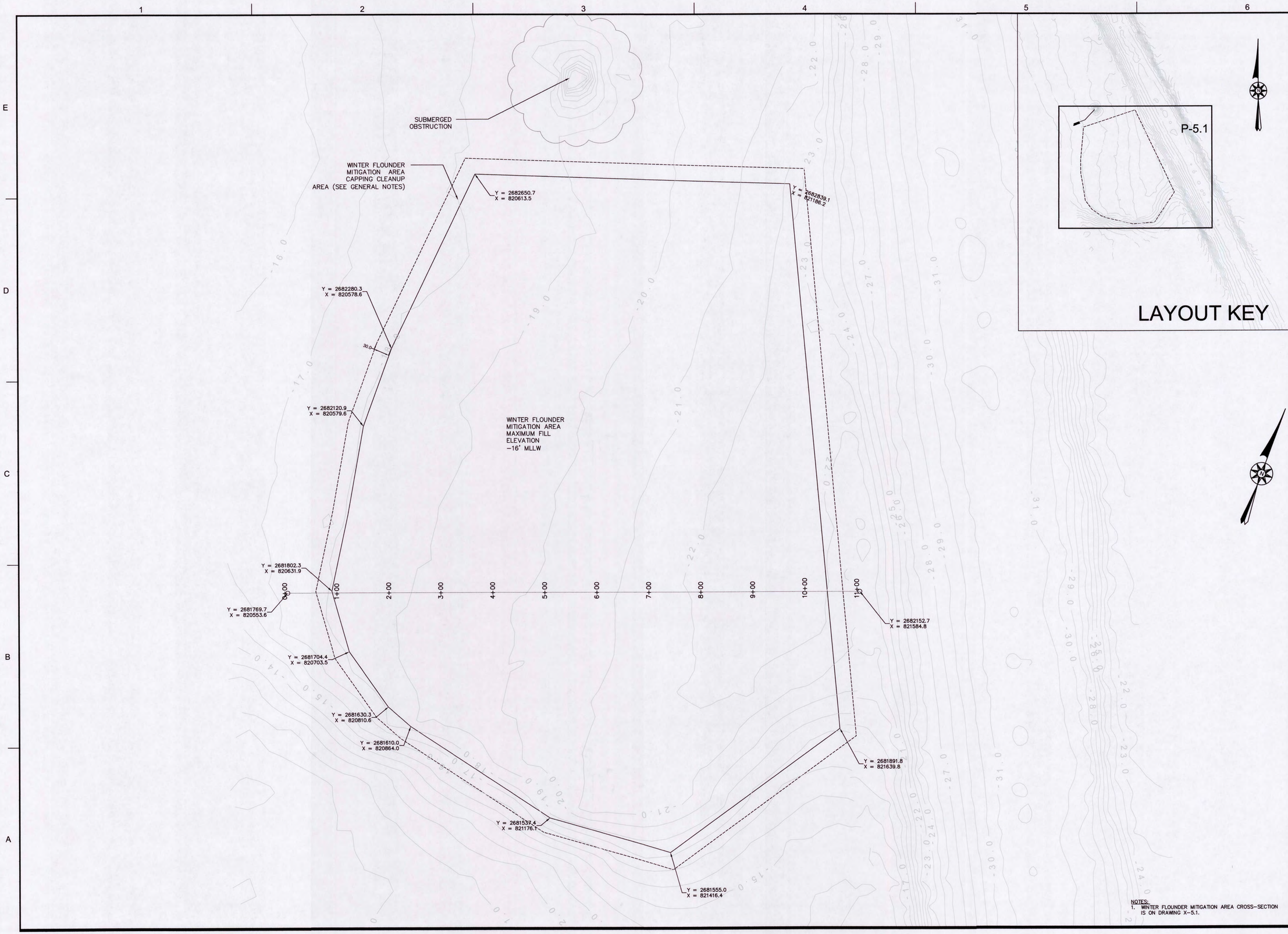

NOTES:
1. WINTER FLOUNDER MITIGATION AREA CROSS-SECTION IS ON DRAWING X-5.1.

APEX

ROCKVILLE, MD
SOUTH WINDSOR, CT - BOSTON, MA - NEW BEDFORD, MA - HOLYOKE, MA

184 HIGH STREET, SUITE 502
BOSTON, MA 02210

58H CONNECTICUT AVENUE
SOUTH WINDSOR, CT

THIS DRAWINGS PREPARED BY APEX FOR THIS PROJECT ARE INSTRUMENTS OF APEX'S SERVICE FOR USE SOLELY WITH RESPECT TO THIS PROJECT, AND APEX SHALL BE DEEMED THE AUTHOR OF THE DRAWING AND SHALL RETAIN ALL COMMON LAW, STATUTORY AND OTHER RESERVED RIGHTS WITH RESPECT THERETO, INCLUDING THE COPYRIGHT. THE DOCUMENTS SHALL NOT BE USED ON OTHER PROJECTS, FOR ADDITIONS TO THIS PROJECT OR FOR COMPLETION OF THIS PROJECT BY OTHERS, EXCEPT BY AGREEMENT IN WRITING AND WITH APPROPRIATE COMPENSATION TO APEX. .

COMMONWEALTH OF MASSACHUSETTS
CHESTER H. MYERS
ENVIRONMENTAL
NO. 45634
8/8/2011
REGISTERED PROFESSIONAL ENGINEER

PROJECT
NEW BEDFORD MARINE COMMERCE TERMINAL

OWNER
MASSACHUSETTS CLEAN ENERGY CENTER
55 SUMMER STREET, 9TH FLOOR
BOSTON, MA

NO.	DATE	DESCRIPTION	BY
2	6/15/12	AREA UPDATED	CWM
1	12/23/11	FOR CONSTRUCTION	CHM

PROJECT NO.	6690
CADD FILE	MIT_OU3_FLNDR
DESIGNED BY	CWM
DRAWN BY	CWM
CHECKED BY	CHM
DATE	8-8-11
DRAWING SCALE	1"=80'

GRAPHIC SCALE
SCALE: 1"=80'
0 40 80 160

SHEET TITLE
WINTER FLOUNDER MITIGATION AREA PLAN

DRAWING NO.
P-5.1

P:\Jobs\6690 NBH_ Phase IV\PLANS\FINAL_PLANS\100% Submittal\P-5.1-P-5.2_MITIGATION_OU3_REV_FLOUNDER.dwg

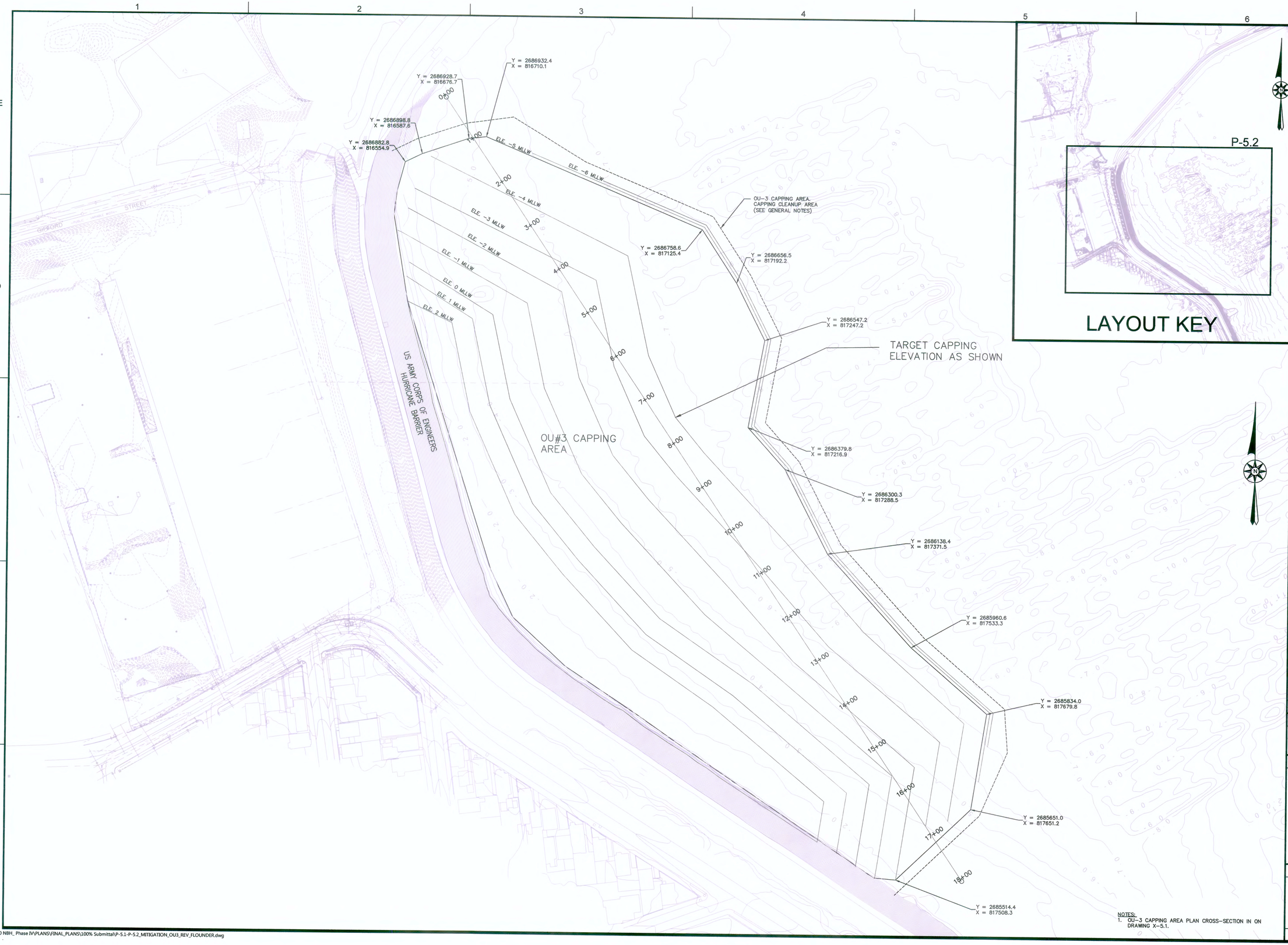

NOTES:
1. OU-3 CAPPING AREA PLAN CROSS-SECTION IN ON DRAWING X-5.1.

APEX
ROCKVILLE, MD
SOUTH WINDSOR, CT - BOSTON, MA - NEW BEDFORD, MA - HOLYOKE, MA

184 HIGH STREET, SUITE 502
BOSTON, MA 02210

58H CONNECTICUT AVENUE
SOUTH WINDSOR, CT

THIS DRAWINGS PREPARED BY APEX FOR THIS PROJECT ARE INSTRUMENTS OF APEX'S SERVICE FOR USE SOLELY WITH RESPECT TO THIS PROJECT, AND APEX SHALL BE DEEMED THE AUTHOR OF THE DRAWING AND SHALL RETAIN ALL COMMON LAW, STATUTORY AND OTHER RESERVED RIGHTS WITH RESPECT THEREIN, INCLUDING THE COPYRIGHT. THE DOCUMENTS SHALL NOT BE USED ON OTHER PROJECTS, FOR ADDITIONS TO THIS PROJECT OR FOR COMPLETION OF THIS PROJECT BY OTHERS, EXCEPT BY AGREEMENT IN WRITING AND WITH APPROPRIATE COMPENSATION TO APEX.

COMMONWEALTH OF MASSACHUSETTS
CHESTER H. MYERS
ENVIRONMENTAL
NO. 45054
3/7/12
REGISTERED PROFESSIONAL ENGINEER

PROJECT
NEW BEDFORD MARINE COMMERCE TERMINAL

OWNER
MASSACHUSETTS CLEAN ENERGY CENTER
55 SUMMER STREET, 9TH FLOOR
BOSTON, MA

NO.	DATE	DESCRIPTION	BY
2	03/16/12	EX. COND. UPDATE	CWM
1	12/23/11	FOR CONSTRUCTION	CHM

PROJECT NO.	6690
CADD FILE	MIT_OU3_FLNDR
DESIGNED BY	CWM
DRAWN BY	CWM
CHECKED BY	CHM
DATE	8-8-11
DRAWING SCALE	1"=80'

GRAPHIC SCALE
SCALE: 1"=80'
0 40 80 160

SHEET TITLE
OU-3 CAPPING AREA PLAN

DRAWING NO.
P-5.2

P:\Jobs\6690 NBH_ Phase IV\PLANS\FINAL_PLANS\100% Submittal\P-5.1-P-5.2_MITIGATION_OU3_REV_FLOUNDER.dwg

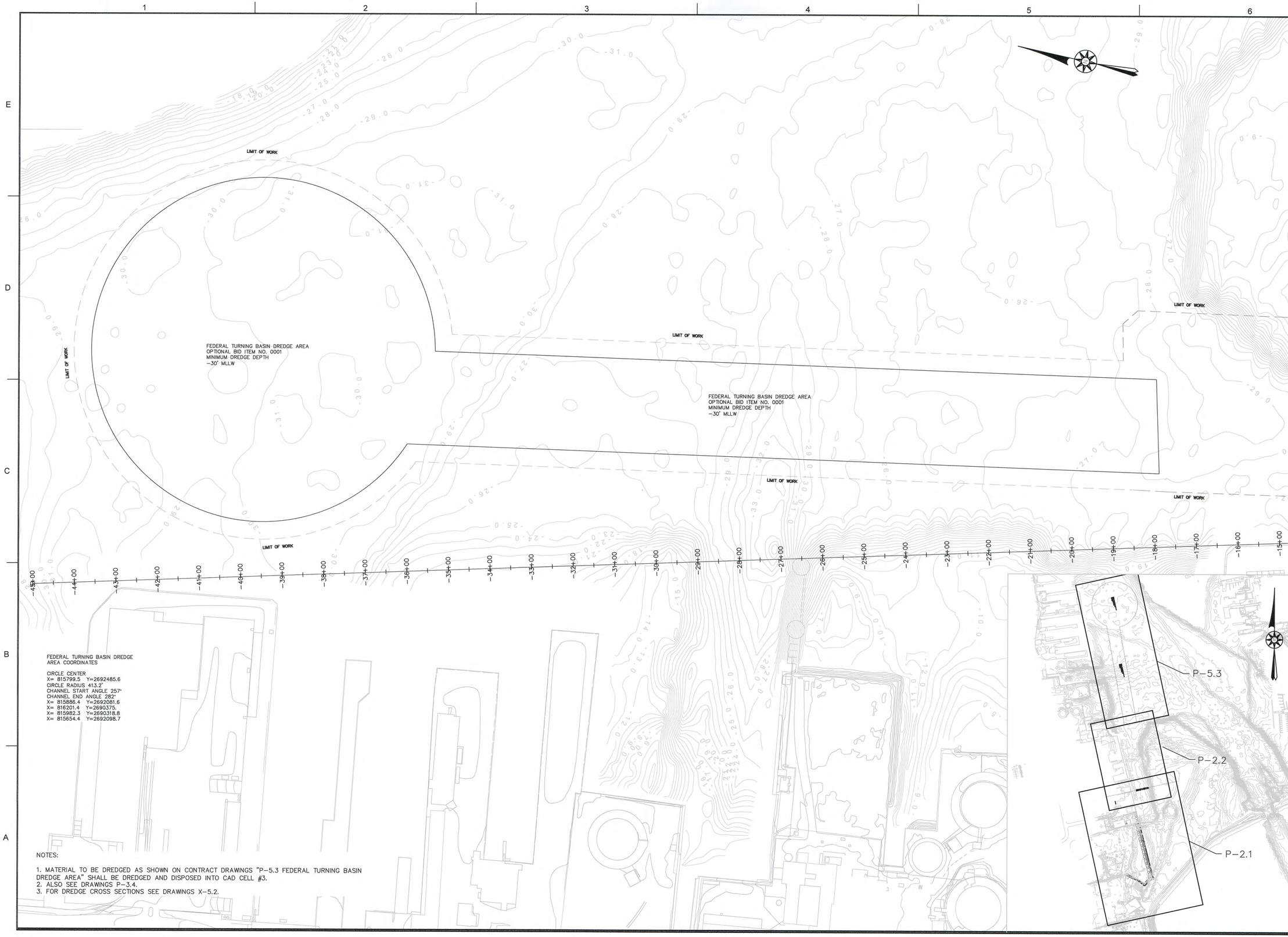

FEDERAL TURNING BASIN DREDGE AREA COORDINATES

CIRCLE CENTER
X= 815799.5 Y=2692485.6
CIRCLE RADIUS 413.2'
CHANNEL START ANGLE 257°
CHANNEL END ANGLE 282°
X= 815886.4 Y=2692081.6
X= 816201.4 Y=2690375.
X= 815982.3 Y=2690318.8
X= 815654.4 Y=2692098.7

NOTES:

1. MATERIAL TO BE DREDGED AS SHOWN ON CONTRACT DRAWINGS "P-5.3 FEDERAL TURNING BASIN DREDGE AREA" SHALL BE DREDGED AND DISPOSED INTO CAD CELL #3.
2. ALSO SEE DRAWINGS P-3.4.
3. FOR DREDGE CROSS SECTIONS SEE DRAWINGS X-5.2.

APEX

ROCKVILLE, MD
SOUTH WINDSOR, CT - BOSTON, MA - NEW BEDFORD, MA - HOLYOKE, MA

184 HIGH STREET, SUITE 502
BOSTON, MA 02210

58H CONNECTICUT AVENUE
SOUTH WINDSOR, CT

This drawings prepared by Apex for this project are instruments of Apex's service for use solely with respect to this project, and Apex shall be deemed the author of the Drawing and shall retain all common law, statutory and other reserved rights with respect thereto, including the copyright. The Documents shall not be used on other projects, for additions to this project or for completion of this project by others, except by agreement in writing and with appropriate compensation to Apex. .

COMMONWEALTH OF MASSACHUSETTS
CHESTER H. MYERS
ENVIRONMENTAL
NO. 45554
8/7/13
REGISTERED PROFESSIONAL ENGINEER

PROJECT
NEW BEDFORD MARINE COMMERCE TERMINAL

OWNER
MASSACHUSETTS CLEAN ENERGY CENTER
55 SUMMER STREET, 9TH FLOOR
BOSTON, MASSACHUSETTS

NO.	DATE	DESCRIPTION	BY
1.	12-23-11	FOR CONSTRUCTION	CHM

PROJECT NO.	6690
CADD FILE	B_I_DREDGE
DESIGNED BY	GCD
DRAWN BY	CWM
CHECKED BY	CHM
DATE	8/30/11
DRAWING SCALE	1"=100'

GRAPHIC SCALE
SCALE: 1"=100'
0 50 100 200

SHEET TITLE
FEDERAL TURNING BASIN DREDGE AREA

DRAWING NO.
P-5.3

THIS SHEET INTENTIONALLY LEFT BLANK

APEX

ROCKVILLE, MD
SOUTH WINDSOR, CT - BOSTON, MA -
NEW BEDFORD, MA - HOLYOKE, MA

184 HIGH STREET, SUITE 502
BOSTON, MA 02210

58H CONNECTICUT AVENUE
SOUTH WINDSOR, CT

This drawings prepared by Apex for this project are instruments of Apex's service for use solely with respect to this project, and Apex shall be deemed the author of the Drawing and shall retain all common law, statutory and other reserved rights with respect thereto, including the copyright. The Documents shall not be used on other projects, for additions to this project or for completion of this project by others, except by agreement in writing and with appropriate compensation to Apex. .

PROJECT

NEW BEDFORD
MARINE COMMERCE
TERMINAL

OWNER

MASSACHUSETTS CLEAN ENERGY CENTER
55 SUMMER STREET, 9TH FLOOR
BOSTON, MASSACHUSETTS

NO.	DATE	DESCRIPTION	BY

PROJECT NO.	6690
CADD FILE	P-5.3-P-5.5_BLANK SHEETS
DESIGNED BY	GCD
DRAWN BY	GCD
CHECKED BY	CHM
DATE	08/04/2011
DRAWING SCALE	1"=50'

GRAPHIC SCALE

SCALE: 1"=50'

0 25 50 75 125 FEET

SHEET TITLE

BLANK
SHEET

DRAWING NO.

P-5.4

THIS SHEET INTENTIONALLY LEFT BLANK

APEX

ROCKVILLE, MD
SOUTH WINDSOR, CT - BOSTON, MA -
NEW BEDFORD, MA - HOLYOKE, MA

184 HIGH STREET, SUITE 502
BOSTON, MA 02210

58H CONNECTICUT AVENUE
SOUTH WINDSOR, CT

This drawings prepared by Apex for this project are instruments of Apex's service for use solely with respect to this project, and Apex shall be deemed the author of the Drawing and shall retain all common law, statutory and other reserved rights with respect thereto, including the copyright. The Documents shall not be used on other projects, for additions to this project or for completion of this project by others, except by agreement in writing and with appropriate compensation to Apex. .

PROJECT

NEW BEDFORD
MARINE COMMERCE
TERMINAL

OWNER

MASSACHUSETTS CLEAN ENERGY CENTER
55 SUMMER STREET, 9TH FLOOR
BOSTON, MASSACHUSETTS

NO.	DATE	DESCRIPTION	BY

PROJECT NO.	6690
CADD FILE	P-5.3-P-5.5_BLANK SHEETS
DESIGNED BY	GCD
DRAWN BY	GCD
CHECKED BY	CHM
DATE	08/04/2011
DRAWING SCALE	1"=50'

GRAPHIC SCALE

SCALE: 1"=50'

0 25 50 75 125 FEET

SHEET TITLE

BLANK
SHEET

DRAWING NO.

P-5.5

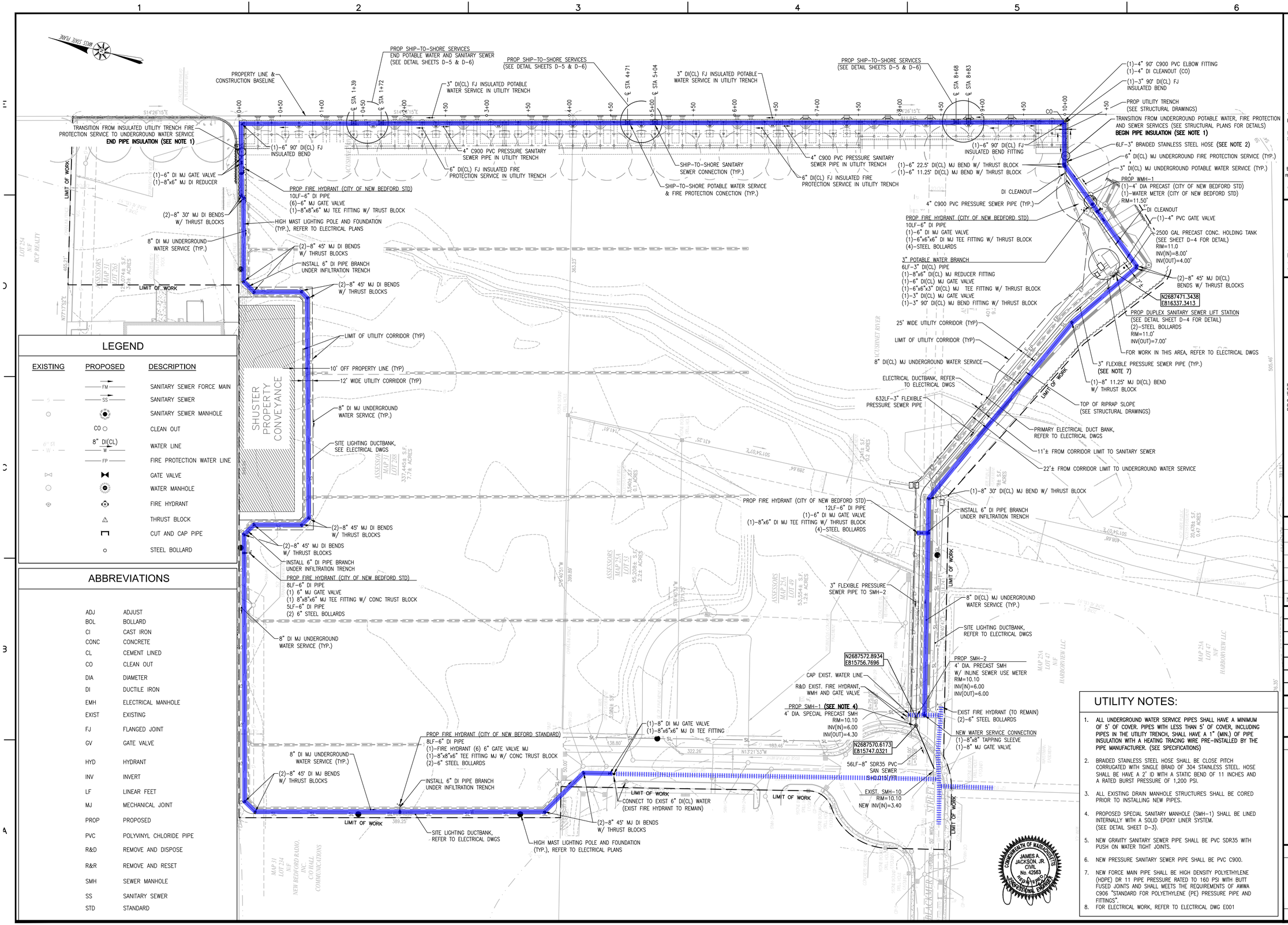

LEGEND

EXISTING	PROPOSED	DESCRIPTION
	FM	SANITARY SEWER FORCE MAIN
S	SS	SANITARY SEWER
		SANITARY SEWER MANHOLE
CO		CLEAN OUT
8" DI(CL) W		WATER LINE
	FP	FIRE PROTECTION WATER LINE
		GATE VALVE
		WATER MANHOLE
		FIRE HYDRANT
		THRUST BLOCK
		CUT AND CAP PIPE
		STEEL BOLLARD

ABBREVIATIONS

ADJ	ADJUST
BOL	BOLLARD
CI	CAST IRON
CONC	CONCRETE
CL	CEMENT LINED
CO	CLEAN OUT
DIA	DIAMETER
DI	DUCTILE IRON
EMH	ELECTRICAL MANHOLE
EXIST	EXISTING
FJ	FLANGED JOINT
GV	GATE VALVE
HYD	HYDRANT
INV	INVERT
LF	LINEAR FEET
MJ	MECHANICAL JOINT
PROP	PROPOSED
PVC	POLYVINYL CHLORIDE PIPE
R&D	REMOVE AND DISPOSE
R&R	REMOVE AND RESET
SMH	SEWER MANHOLE
SS	SANITARY SEWER
STD	STANDARD

UTILITY NOTES:

1. ALL UNDERGROUND WATER SERVICE PIPES SHALL HAVE A MINIMUM OF 5' OF COVER. PIPES WITH LESS THAN 5' OF COVER, INCLUDING PIPES IN THE UTILITY TRENCH, SHALL HAVE A 1" (MIN.) OF PIPE INSULATION WITH A HEATING TRACING WIRE PRE-INSTALLED BY THE PIPE MANUFACTURER. (SEE SPECIFICATIONS)
2. BRAIDED STAINLESS STEEL HOSE SHALL BE CLOSE PITCH CORRUGATED WITH SINGLE BRAID OF 304 STAINLESS STEEL. HOSE SHALL BE HAVE A 2' ID WITH A STATIC BEND OF 11 INCHES AND A RATED BURST PRESSURE OF 1,200 PSI.
3. ALL EXISTING DRAIN MANHOLE STRUCTURES SHALL BE CORED PRIOR TO INSTALLING NEW PIPES.
4. PROPOSED SPECIAL SANITARY MANHOLE (SMH-1) SHALL BE LINED INTERNALLY WITH A SOLID EPOXY LINER SYSTEM. (SEE DETAIL SHEET D-3).
5. NEW GRAVITY SANITARY SEWER PIPE SHALL BE PVC SDR35 WITH PUSH ON WATER TIGHT JOINTS.
6. NEW PRESSURE SANITARY SEWER PIPE SHALL BE PVC C900.
7. NEW FORCE MAIN PIPE SHALL BE HIGH DENSITY POLYETHYLENE (HDPE) DR 11 PIPE PRESSURE RATED TO 160 PSI WITH BUTT FUSED JOINTS AND SHALL MEETS THE REQUIREMENTS OF AWWA C906 "STANDARD FOR POLYETHYLENE (PE) PRESSURE PIPE AND FITTINGS".
8. FOR ELECTRICAL WORK, REFER TO ELECTRICAL DWG E001

COMMONWEALTH OF MASSACHUSETTS JAMES A. JACKSON, JR. CIVIL No. 42563 04/01/2013 REGISTERED PROFESSIONAL ENGINEER

APEX

ROCKVILLE, MD
SOUTH WINDSOR, CT - BOSTON, MA - NEW BEDFORD, MA - HOLYOKE, MA

184 HIGH STREET, SUITE 502
BOSTON, MA 02210

58H CONNECTICUT AVENUE
SOUTH WINDSOR, CT

This drawings prepared by Apex for this project are instruments of Apex's service for use solely with respect to this project, and Apex shall be deemed the author of the Drawing and shall retain all common law, statutory and other reserved rights with respect thereto, including the copyright. The Documents shall not be used on other projects, for additions to this project or for completion of this project by others, except by agreement in writing and with appropriate compensation to Apex.

Maguire Group Inc.
Architects / Engineers / Planners
225 Chapman Street, 4th Floor
Providence,Rhode Island 02905
401-272-6000
www.maguiregroup.com

PROJECT
NEW BEDFORD MARINE COMMERCE TERMINAL

OWNER
MASSACHUSETTS CLEAN ENERGY CENTER
55 SUMMER STREET, 9TH FLOOR
BOSTON, MASSACHUSETTS

NO.	DATE	DESCRIPTION	BY
1	4/01/13	FOR CONSTRUCTION	JAJ

PROJECT NO.	6690
CADD FILE	
DESIGNED BY	JTS
DRAWN BY	JTS
CHECKED BY	JAJ
DATE	4/01/13
DRAWING SCALE	1"=50'

GRAPHIC SCALE
SCALE: 1"=50'
0 25 50 100

SHEET TITLE

UTILITY PLAN

DRAWING NO.

U-1

SHEET NOTES:

1. FOR GENERAL NOTES, LEGEND AND ABBREVIATIONS, REFER TO DRAWING E001.
2. FOR ELECTRICAL SITE DETAILS, REFER TO DWGS. D–6, D–7, D–8 AND D–9.

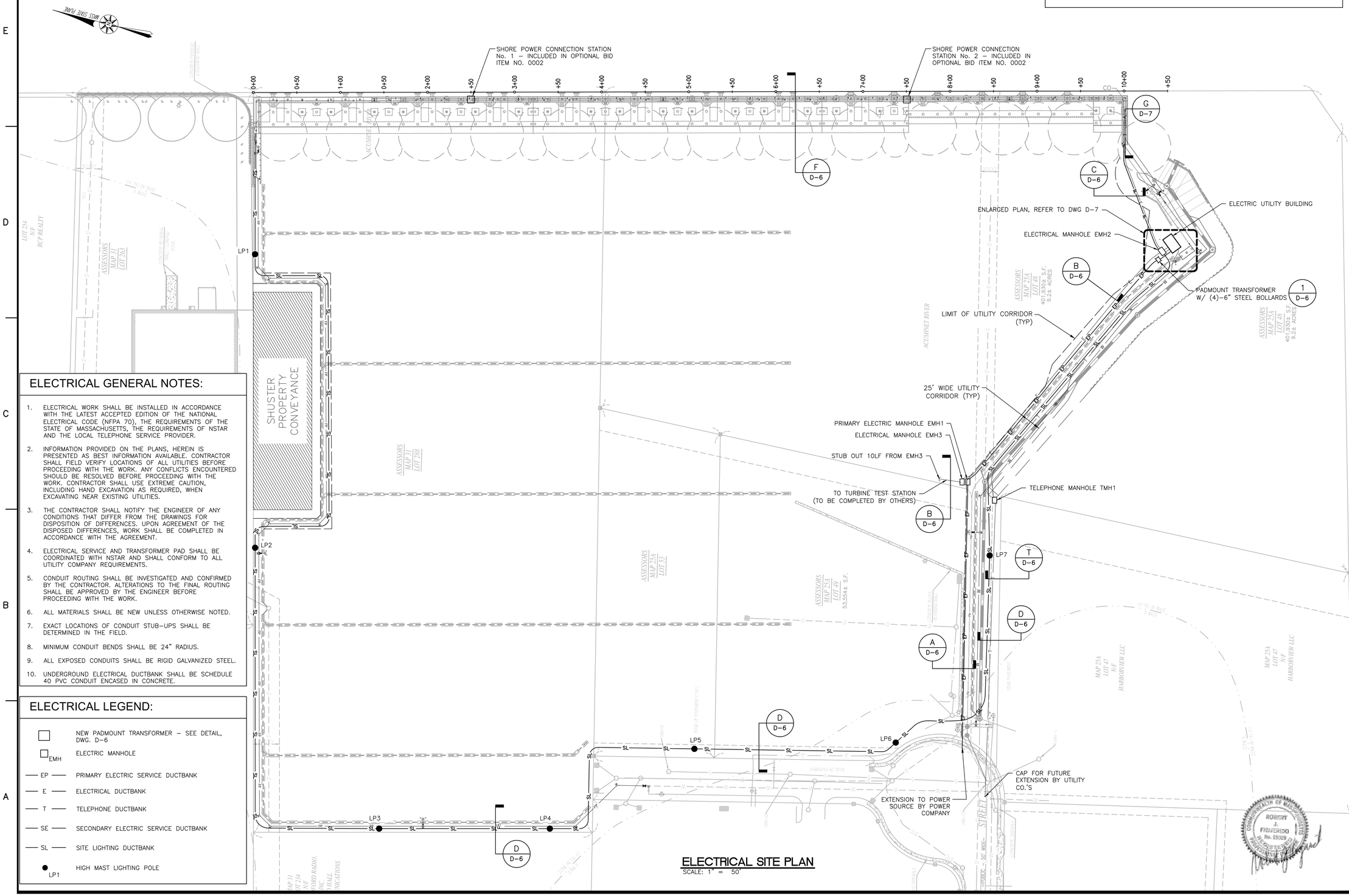

ELECTRICAL GENERAL NOTES:

1. ELECTRICAL WORK SHALL BE INSTALLED IN ACCORDANCE WITH THE LATEST ACCEPTED EDITION OF THE NATIONAL ELECTRICAL CODE (NFPA 70), THE REQUIREMENTS OF THE STATE OF MASSACHUSETTS, THE REQUIREMENTS OF NSTAR AND THE LOCAL TELEPHONE SERVICE PROVIDER.
2. INFORMATION PROVIDED ON THE PLANS, HEREIN IS PRESENTED AS BEST INFORMATION AVAILABLE. CONTRACTOR SHALL FIELD VERIFY LOCATIONS OF ALL UTILITIES BEFORE PROCEEDING WITH THE WORK. ANY CONFLICTS ENCOUNTERED SHOULD BE RESOLVED BEFORE PROCEEDING WITH THE WORK. CONTRACTOR SHALL USE EXTREME CAUTION, INCLUDING HAND EXCAVATION AS REQUIRED, WHEN EXCAVATING NEAR EXISTING UTILITIES.
3. THE CONTRACTOR SHALL NOTIFY THE ENGINEER OF ANY CONDITIONS THAT DIFFER FROM THE DRAWINGS FOR DISPOSITION OF DIFFERENCES. UPON AGREEMENT OF THE DISPOSED DIFFERENCES, WORK SHALL BE COMPLETED IN ACCORDANCE WITH THE AGREEMENT.
4. ELECTRICAL SERVICE AND TRANSFORMER PAD SHALL BE COORDINATED WITH NSTAR AND SHALL CONFORM TO ALL UTILITY COMPANY REQUIREMENTS.
5. CONDUIT ROUTING SHALL BE INVESTIGATED AND CONFIRMED BY THE CONTRACTOR. ALTERATIONS TO THE FINAL ROUTING SHALL BE APPROVED BY THE ENGINEER BEFORE PROCEEDING WITH THE WORK.
6. ALL MATERIALS SHALL BE NEW UNLESS OTHERWISE NOTED.
7. EXACT LOCATIONS OF CONDUIT STUB–UPS SHALL BE DETERMINED IN THE FIELD.
8. MINIMUM CONDUIT BENDS SHALL BE 24" RADIUS.
9. ALL EXPOSED CONDUITS SHALL BE RIGID GALVANIZED STEEL.
10. UNDERGROUND ELECTRICAL DUCTBANK SHALL BE SCHEDULE 40 PVC CONDUIT ENCASED IN CONCRETE.

ELECTRICAL LEGEND:

□	NEW PADMOUNT TRANSFORMER – SEE DETAIL, DWG. D–6
□ EMH	ELECTRIC MANHOLE
— EP —	PRIMARY ELECTRIC SERVICE DUCTBANK
— E —	ELECTRICAL DUCTBANK
— T —	TELEPHONE DUCTBANK
— SE —	SECONDARY ELECTRIC SERVICE DUCTBANK
— SL —	SITE LIGHTING DUCTBANK
● LP1	HIGH MAST LIGHTING POLE

ELECTRICAL SITE PLAN

SCALE: 1" = 50'

APEX

ROCKVILLE, MD
SOUTH WINDSOR, CT - BOSTON, MA - NEW BEDFORD, MA - HOLYOKE, MA

184 HIGH STREET, SUITE 502
BOSTON, MA 02210

58H CONNECTICUT AVENUE
SOUTH WINDSOR, CT

This drawings prepared by Apex for this project are instruments of Apex's service for use solely with respect to this project, and Apex shall be deemed the author of the Drawing and shall retain all common law, statutory and other reserved rights with respect thereto, including the copyright. The Documents shall not be used on other projects, for additions to this project or for completion of this project by others, except by agreement in writing and with appropriate compensation to Apex.

Maguire Group Inc.
Architects / Engineers / Planners
225 Chapman Street, 4th Floor
Providence,Rhode Island 02905
401–272–6000
www.maguiregroup.com

PROJECT
NEW BEDFORD MARINE COMMERCE TERMINAL

OWNER
MASSACHUSETTS CLEAN ENERGY CENTER
55 SUMMER STREET, 9TH FLOOR
BOSTON, MASSACHUSETTS

NO.	DATE	DESCRIPTION	BY
1	4/01/13	FOR CONSTRUCTION	JAJ

PROJECT NO.	6690
CADD FILE	
DESIGNED BY	DNL
DRAWN BY	RAB
CHECKED BY	JAJ
DATE	4/01/13
DRAWING SCALE	1"=50'

GRAPHIC SCALE
SCALE: 1"=50'
0 25 50 100

SHEET TITLE

ELECTRICAL SITE PLAN

DRAWING NO.

E001

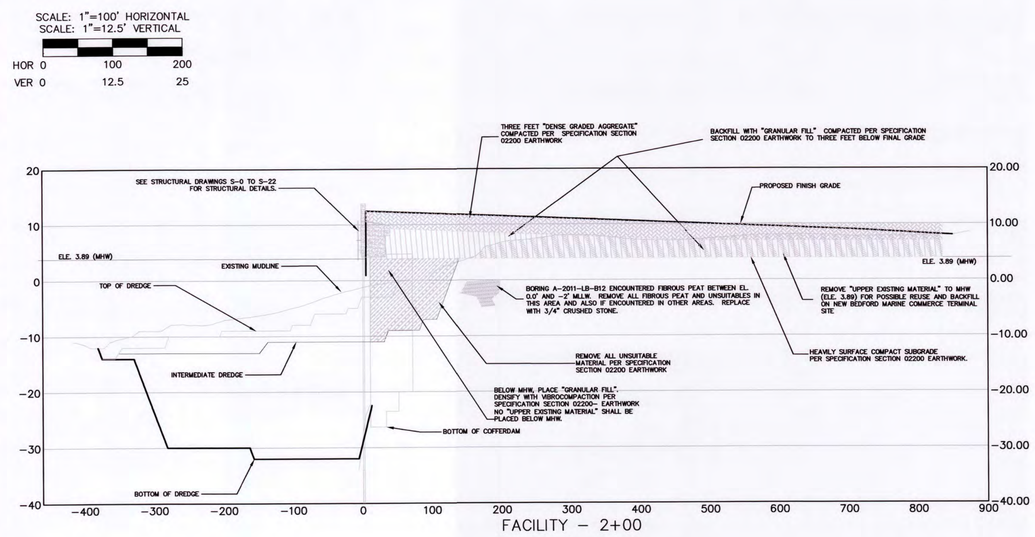

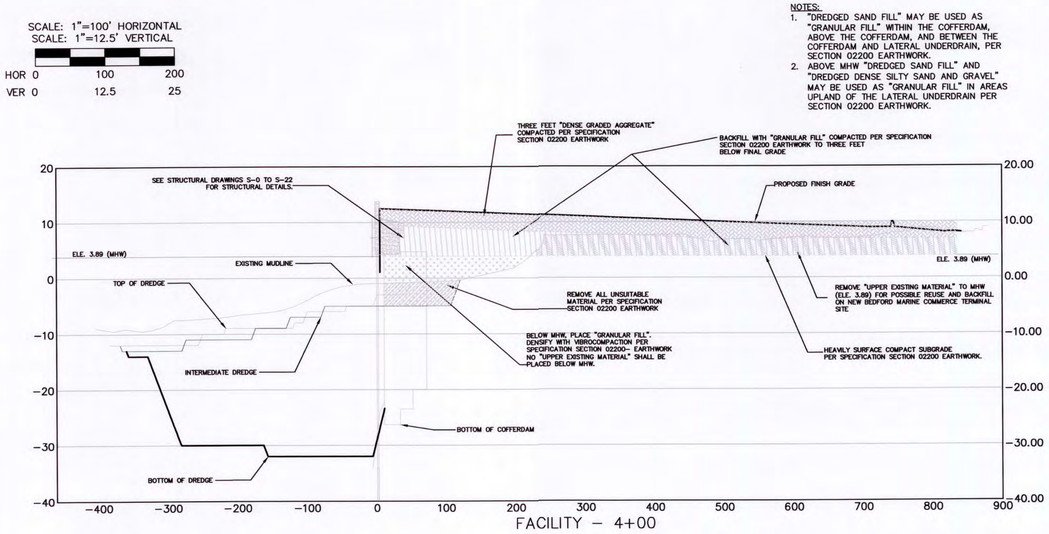

NOTES:
1. "DREDGED SAND FILL" MAY BE USED AS "GRANULAR FILL" WITHIN THE COFFERDAM, ABOVE THE COFFERDAM, AND BETWEEN THE COFFERDAM AND LATERAL UNDERDRAIN, PER SECTION 02200 EARTHWORK.
2. ABOVE MHW "DREDGED SAND FILL" AND "DREDGED DENSE SILTY SAND AND GRAVEL" MAY BE USED AS "GRANULAR FILL" IN AREAS UPLAND OF THE LATERAL UNDERDRAIN PER SECTION 02200 EARTHWORK.

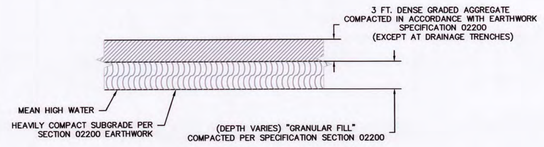

TYPICAL SECTION
NO FILLING BELOW MEAN HIGH WATER

NTS

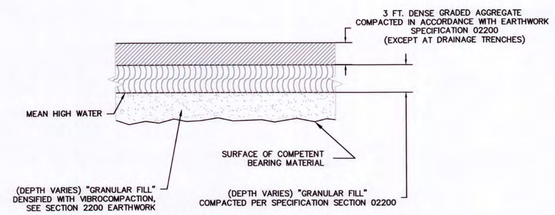

TYPICAL SECTION FOR FILLING
BELOW MEAN HIGH WATER

NTS

COMMONWEALTH OF MASSACHUSETTS
THOMAS E. BILLUPS
CIVIL
No. 34600
Registered PROFESSIONAL ENGINEER
7/17/12

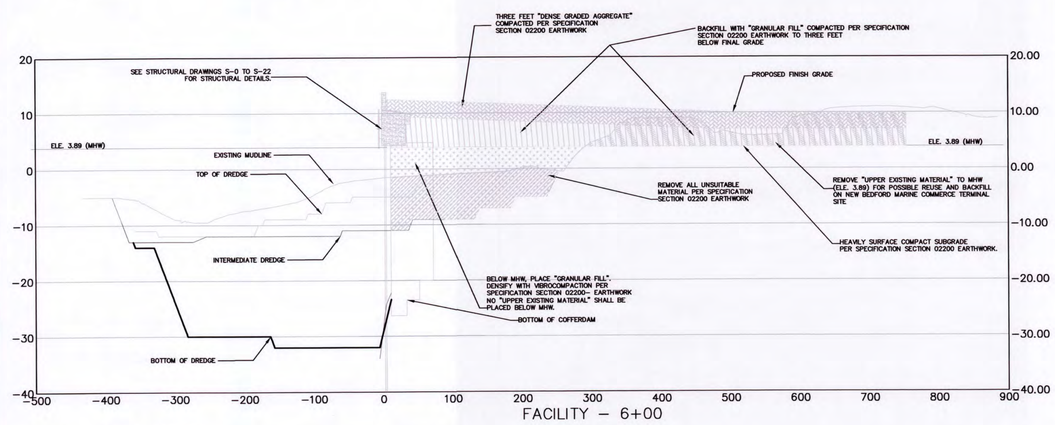

SCALE: 1"=100' HORIZONTAL
SCALE: 1"=12.5' VERTICAL
HOR 0 100 200
VER 0 12.5 25

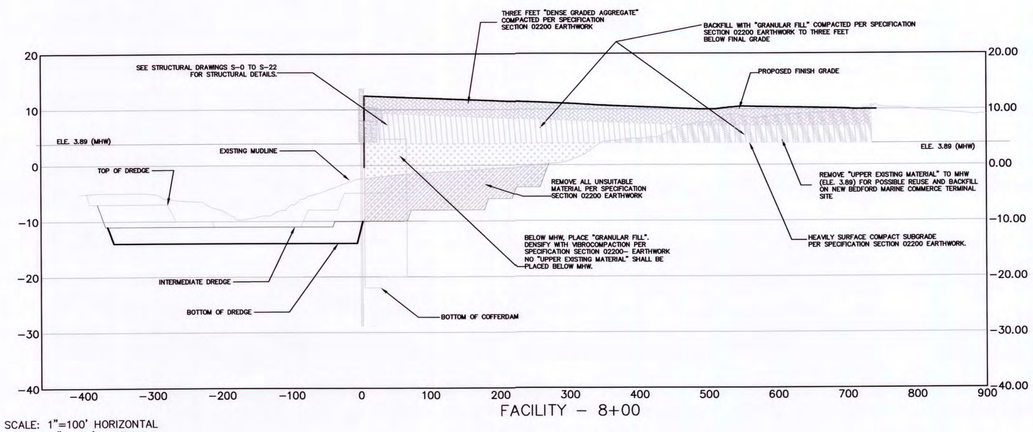

SCALE: 1"=100' HORIZONTAL
SCALE: 1"=12.5' VERTICAL
HOR 0 100 200
VER 0 12.5 25

APEX
ROCKVILLE, MD
SOUTH WINDSOR, CT - BOSTON, MA - NEW BEDFORD, MA - HOLYOKE, MA

184 HIGH STREET, SUITE 502
BOSTON, MA 02210

58H CONNECTICUT AVENUE
SOUTH WINDSOR, CT

THIS DRAWINGS PREPARED BY APEX FOR THIS PROJECT ARE INSTRUMENTS OF APEX'S SERVICE FOR USE SOLELY WITH RESPECT TO THIS PROJECT, AND APEX SHALL BE DEEMED THE AUTHOR OF THE DRAWING AND SHALL RETAIN ALL COMMON LAW, STATUTORY AND OTHER RESERVED RIGHTS WITH RESPECT THERETO, INCLUDING THE COPYRIGHT. THE DOCUMENTS SHALL NOT BE USED ON OTHER PROJECTS, FOR ADDITIONS TO THIS PROJECT OR FOR COMPLETION OF THIS PROJECT BY OTHERS, EXCEPT BY AGREEMENT IN WRITING AND WITH APPROPRIATE COMPENSATION TO APEX.

GZA
GeoEnvironmental, Inc.
Engineers and Scientists
530 Broadway
Providence, RI 02909
(401) 421-4140

PROJECT
NEW BEDFORD MARINE COMMERCE TERMINAL

OWNER
MASSACHUSETTS CLEAN ENERGY CENTER
55 SUMMER STREET, 9TH FLOOR
BOSTON, MA

NO.	DATE	DESCRIPTION	BY
2.	6/28/12	DGA THICKNESS ADJ	CWM
1.	12/23/11	FOR CONSTRUCTION	TEB

PROJECT NO.	6690
CADD FILE	UPLAND_GRADING
DESIGNED BY	CWM
DRAWN BY	CWM
CHECKED BY	CHM
DATE	8-8-11
DRAWING SCALE	AS NOTED

GRAPHIC SCALE

SHEET TITLE
FACILITY CROSS SECTIONS

DRAWING NO.
X-1.1

P:\Jobs\6690 NBH_ Phase IV\PLANS\FINAL_PLANS\100% Submittal\P-1.3-P-1.7_X-1.1_X-1.2UPLAND_GRADING.dwg

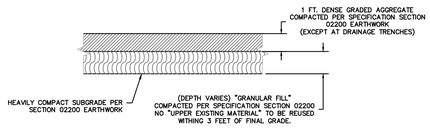

TYPICAL DARTMOUTH MILLS SURFACE SECTION

NTS

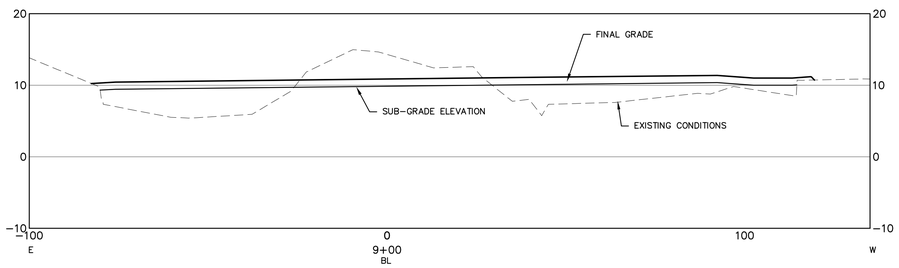

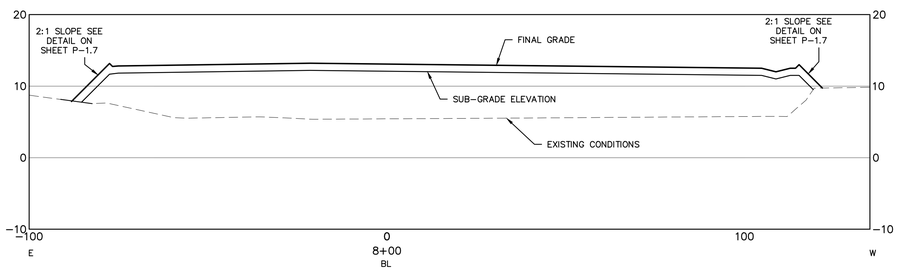

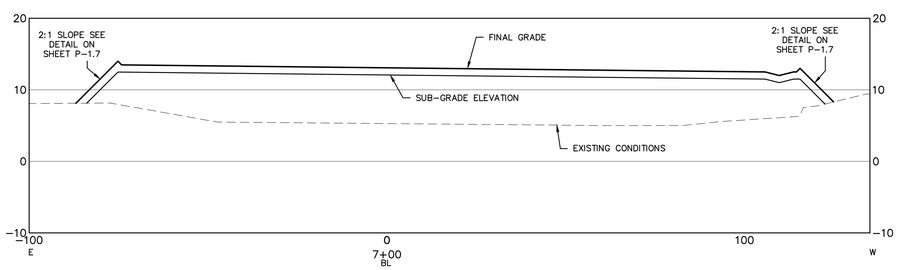

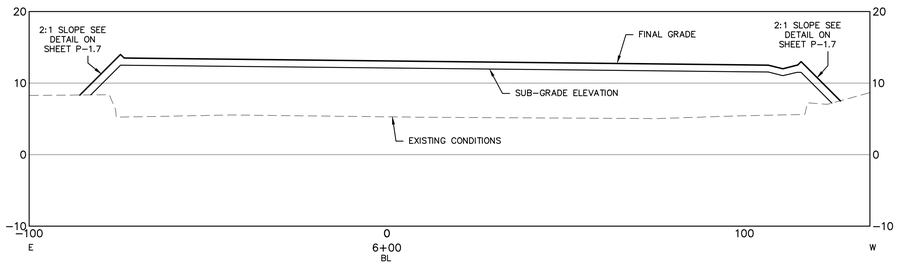

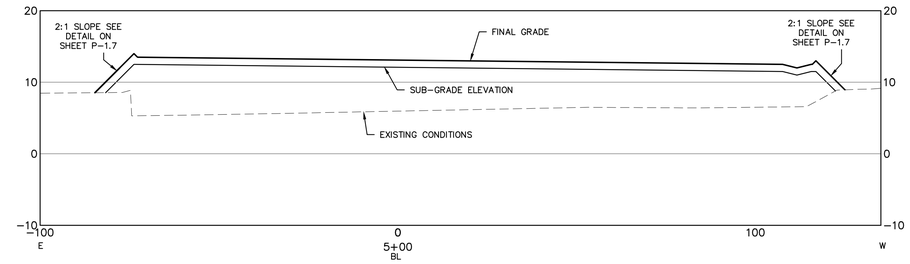

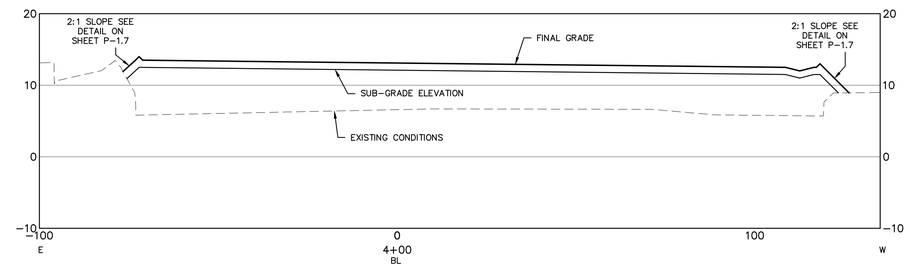

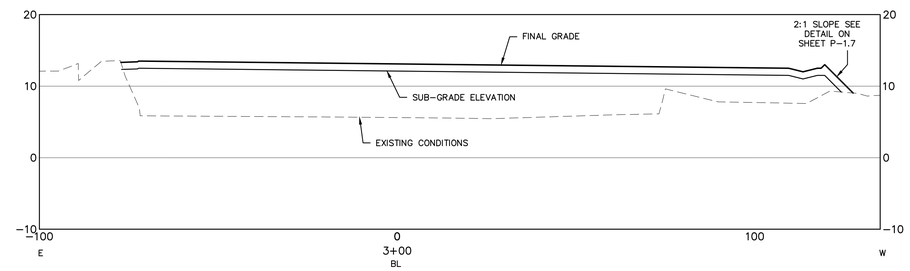

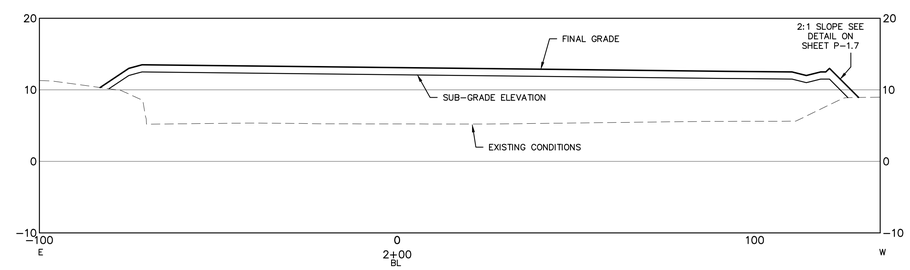

APEX

ROCKVILLE, MD
SOUTH WINDSOR, CT - BOSTON, MA - NEW BEDFORD, MA - HOLYOKE, MA

184 HIGH STREET, SUITE 502
BOSTON, MA 02210

58H CONNECTICUT AVENUE
SOUTH WINDSOR, CT

THIS DRAWINGS PREPARED BY APEX FOR THIS PROJECT ARE INSTRUMENTS OF APEX'S SERVICE FOR USE SOLELY WITH RESPECT TO THIS PROJECT, AND APEX SHALL BE DEEMED THE AUTHOR OF THE DRAWING AND SHALL RETAIN ALL COMMON LAW, STATUTORY AND OTHER RESERVED RIGHTS WITH RESPECT THERETO, INCLUDING THE COPYRIGHT. THE DOCUMENTS SHALL NOT BE USED ON OTHER PROJECTS, FOR ADDITIONS TO THIS PROJECT OR FOR COMPLETION OF THIS PROJECT BY OTHERS, EXCEPT BY AGREEMENT IN WRITING AND WITH APPROPRIATE COMPENSATION TO APEX.

COMMONWEALTH OF MASSACHUSETTS
CHESTER H. MYERS
ENVIRONMENTAL
NO. 45654
11/21/12
REGISTERED PROFESSIONAL ENGINEER

PROJECT
NEW BEDFORD MARINE COMMERCE TERMINAL

OWNER
MASSACHUSETTS CLEAN ENERGY CENTER
55 SUMMER STREET, 9TH FLOOR
BOSTON, MA

NO.	DATE	DESCRIPTION	BY
1.	12/23/11	FOR CONSTRUCTION	TEB

PROJECT NO.	6690
CADD FILE	UPLAND_GRADING
DESIGNED BY	CWM
DRAWN BY	CWM
CHECKED BY	CHM
DATE	8-8-11
DRAWING SCALE	

GRAPHIC SCALE

SHEET TITLE

FORMER DARTMOUTH FINISHING SITE CROSS-SECTION

DRAWING NO.

X-1.2

LINE TYPE	SURFACE
———	EXISTING MUDLINE
— — —	BOTTOM OF DREDGE
- - - -	TOP OF DREDGE
———	INTERMEDIATE DREDGE

NOTE: FOR CROSS SECTION LOCATION, SEE SHEET P-2.5 & P-2.6

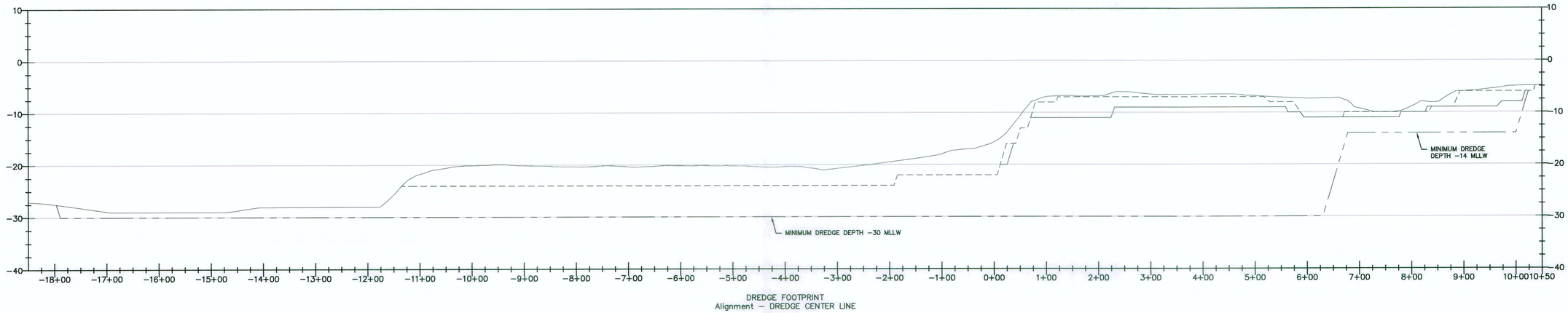

DREDGE FOOTPRINT
Alignment – DREDGE CENTER LINE

APEX

ROCKVILLE, MD
SOUTH WINDSOR, CT - BOSTON, MA - NEW BEDFORD, MA - HOLYOKE, MA

184 HIGH STREET, SUITE 502
BOSTON, MA 02210

58H CONNECTICUT AVENUE
SOUTH WINDSOR, CT

This drawings prepared by Apex for this project are instruments of Apex's service for use solely with respect to this project, and Apex shall be deemed the author of the Drawing and shall retain all common law, statutory and other reserved rights with respect thereto, including the copyright. The Documents shall not be used on other projects, for additions to this project or for completion of this project by others, except by agreement in writing and with appropriate compensation to Apex. .

COMMONWEALTH OF MASSACHUSETTS
CHESTER H. MYERS
ENVIRONMENTAL
NO. 45854
7/29/12
REGISTERED PROFESSIONAL ENGINEER

PROJECT
NEW BEDFORD MARINE COMMERCE TERMINAL

OWNER
MASSACHUSETTS CLEAN ENERGY CENTER
55 SUMMER STREET, 9TH FLOOR
BOSTON, MASSACHUSETTS

NO.	DATE	DESCRIPTION	BY

PROJECT NO.	6690
CADD FILE	X-2.1-X-2.2-CROSS SECTION_NEW
DESIGNED BY	CWM
DRAWN BY	CWM
CHECKED BY	CHM
DATE	8-8-11
DRAWING SCALE	N.T.S

GRAPHIC SCALE

SHEET TITLE

DREDGE CROSS-SECTIONS 1

DRAWING NO.

X-2.1

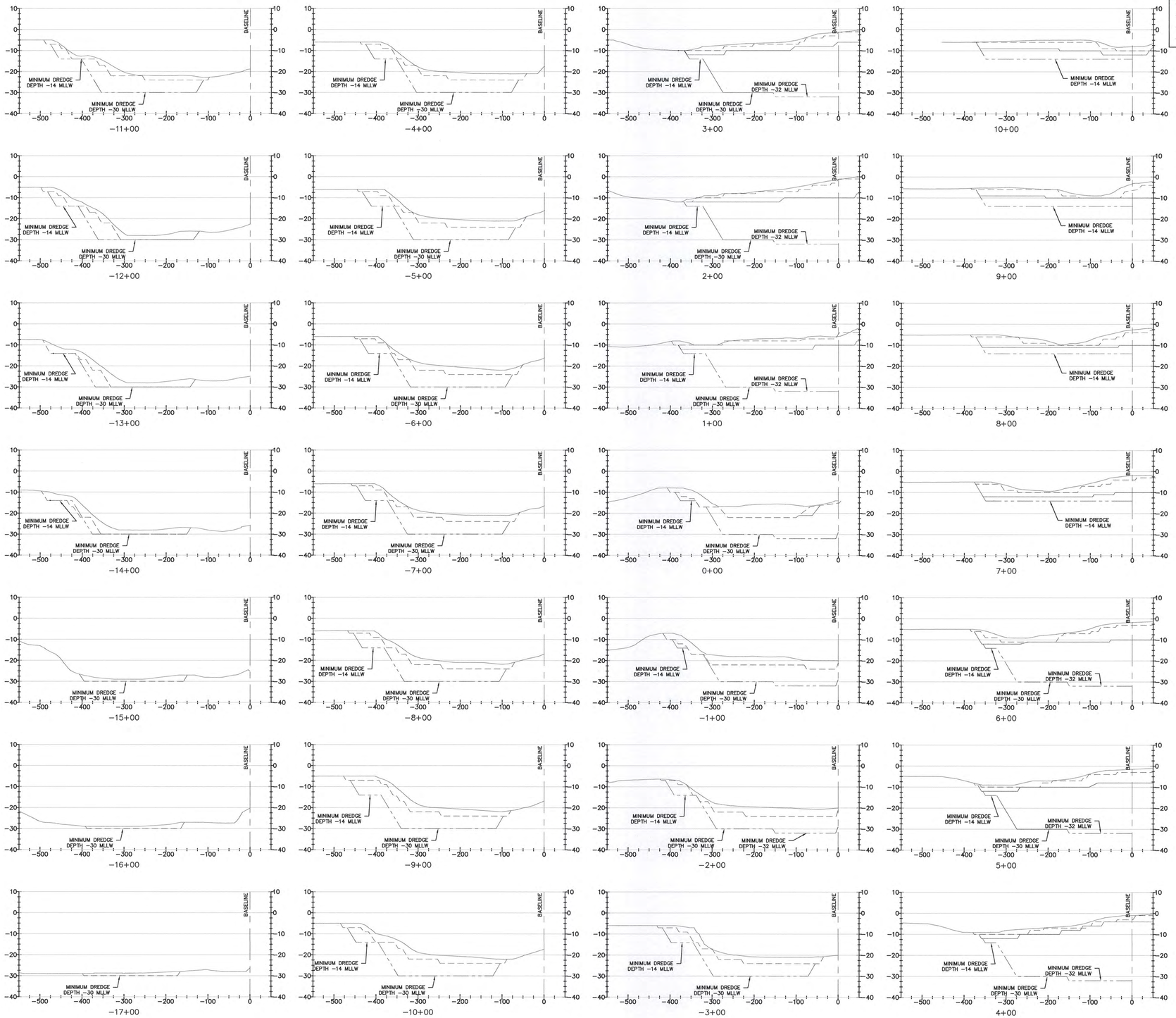

LINE TYPE	SURFACE
	EXISTING MUDLINE
	BOTTOM OF DREDGE
	TOP OF DREDGE
	INTERMEDIATE DREDGE

NOTES:
1). FOR CROSS SECTION LOCATIONS, SEE SHEET P-2.5 & P-2.6
2). ALSO SEE DRAWINGS P-2.1, P-2.2, P-2.3, P-2.4, P-2.5, AND P-2.6 FOR PLAN VIEWS OF THE TOP OF DREDGE, INTERMEDIATE DREDGE AND BOTTOM OF DREDGE MINIMUM DREDGE DEPTHS.

APEX
ROCKVILLE, MD
SOUTH WINDSOR, CT - BOSTON, MA - NEW BEDFORD, MA - HOLYOKE, MA

184 HIGH STREET, SUITE 502
BOSTON, MA 02210

58H CONNECTICUT AVENUE
SOUTH WINDSOR, CT

This drawings prepared by Apex for this project are instruments of Apex's service for use solely with respect to this project, and Apex shall be deemed the author of the Drawing and shall retain all common law, statutory and other reserved rights with respect thereto, including the copyright. The Documents shall not be used on other projects, for additions to this project or for completion of this project by others, except by agreement in writing and with appropriate compensation to Apex. .

COMMONWEALTH OF MASSACHUSETTS
CHESTER H. MYERS
ENVIRONMENTAL
NO. 45654
8/17/11
REGISTERED PROFESSIONAL ENGINEER

PROJECT
NEW BEDFORD MARINE COMMERCE TERMINAL

OWNER
MASSACHUSETTS CLEAN ENERGY CENTER
55 SUMMER STREET, 9TH FLOOR
BOSTON, MASSACHUSETTS

NO.	DATE	DESCRIPTION	BY

PROJECT NO.	6690
CADD FILE	X-2.1-X-2.2-CROSS SECTION_NEW
DESIGNED BY	CWM
DRAWN BY	CWM
CHECKED BY	CHM
DATE	8-8-11
DRAWING SCALE	N.T.S

GRAPHIC SCALE

SHEET TITLE
DREDGE CROSS-SECTIONS 2

DRAWING NO.
X-2.2

NOTES:

- MATERIAL TO BE DREDGED AS SHOWN ON THE CONTRACT DRAWING "P-2.7 GIFFORD STREET CHANNEL DREDGE" SHALL BE DISPOSED WITHIN CAD CELL #3 AS SHOWN ON THE CONTRACT DRAWING "P-3.4 CAD CELL #3 DISPOSAL PLAN".

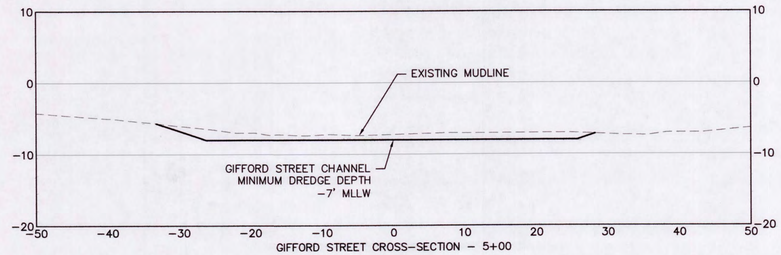

GIFFORD STREET CROSS-SECTION - 5+00

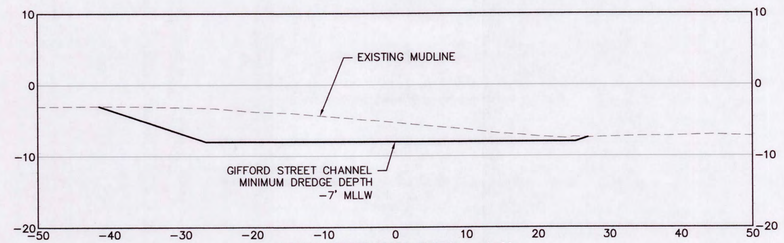

GIFFORD STREET CROSS-SECTION - 4+00

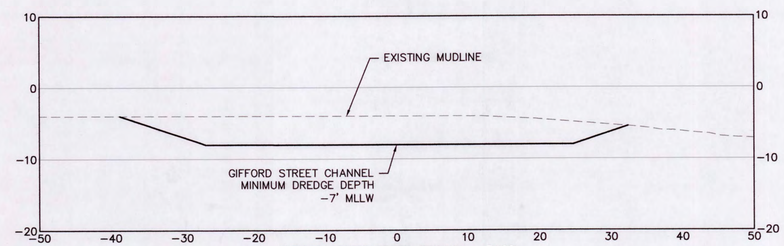

GIFFORD STREET CROSS-SECTION - 3+00

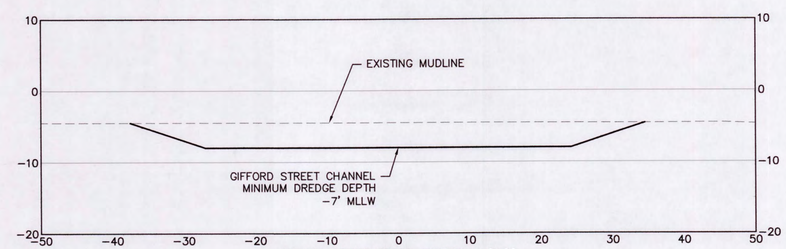

GIFFORD STREET CROSS-SECTION - 2+00

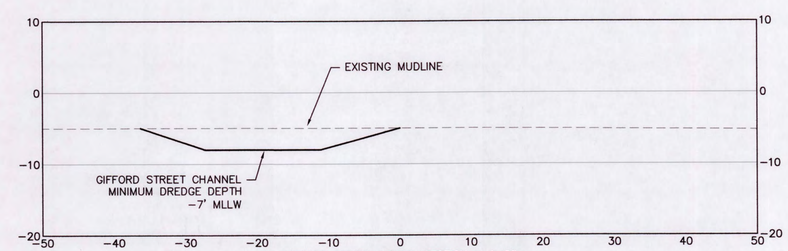

GIFFORD STREET CROSS-SECTION - 1+00

APEX

ROCKVILLE, MD
SOUTH WINDSOR, CT - BOSTON, MA -
NEW BEDFORD, MA - HOLYOKE, MA

184 HIGH STREET, SUITE 502
BOSTON, MA 02210

58H CONNECTICUT AVENUE
SOUTH WINDSOR, CT

This drawings prepared by Apex for this project are instruments of Apex's service for use solely with respect to this project, and Apex shall be deemed the author of the Drawing and shall retain all common law, statutory and other reserved rights with respect thereto, including the copyright. The Documents shall not be used on other projects, for additions to this project or for completion of this project by others, except by agreement in writing and with appropriate compensation to Apex.

COMMONWEALTH OF MASSACHUSETTS
CHESTER H. MYERS
ENVIRONMENTAL
NO. 45654
7/13/11
REGISTERED PROFESSIONAL ENGINEER

PROJECT
NEW BEDFORD MARINE COMMERCE TERMINAL

OWNER
MASSACHUSETTS CLEAN ENERGY CENTER
55 SUMMER STREET, 9TH FLOOR
BOSTON, MA

NO.	DATE	DESCRIPTION	BY
1.	12-23-11	FOR CONSTRUCTION	CHM

PROJECT NO.	6690
CADD FILE	GIFFORD_ST
DESIGNED BY	CWM
DRAWN BY	CWM
CHECKED BY	CHM
DATE	8-30-11
DRAWING SCALE	

GRAPHIC SCALE

SHEET TITLE

GIFFORD STREET CHANNEL DREDGE

DRAWING NO.

X-2.3

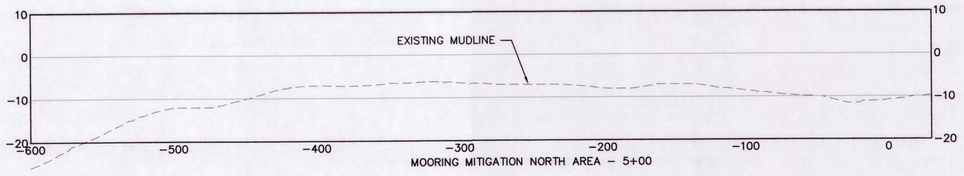

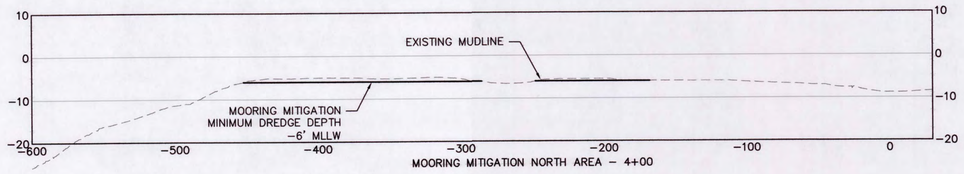

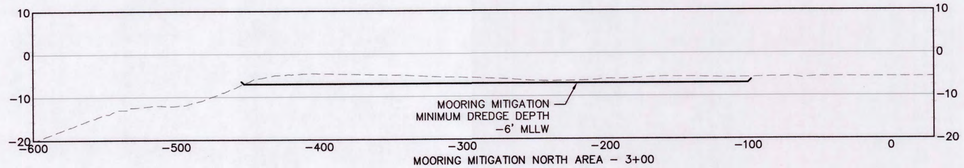

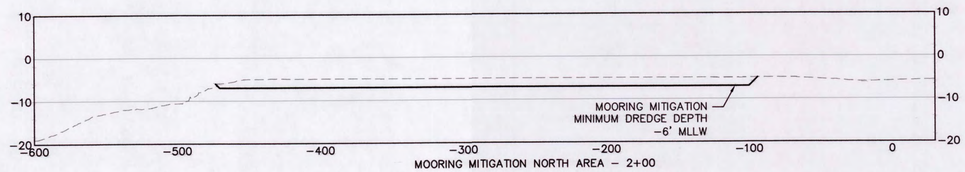

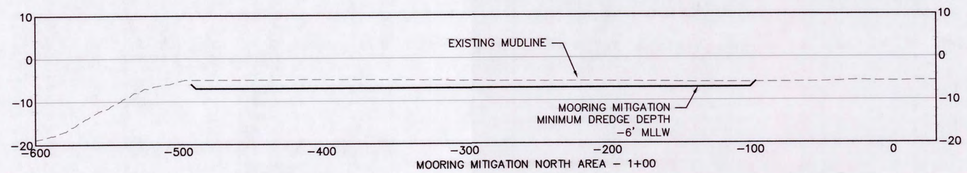

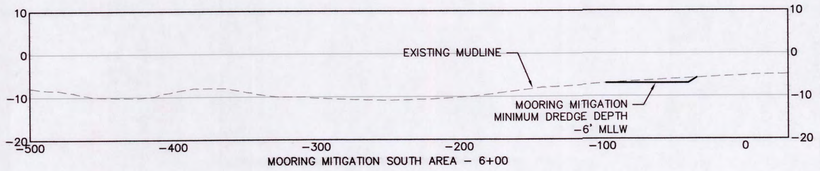

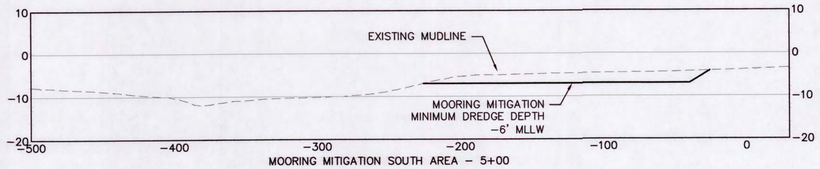

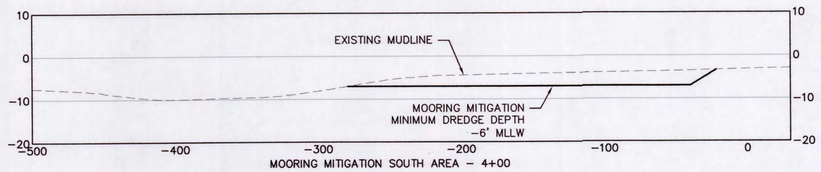

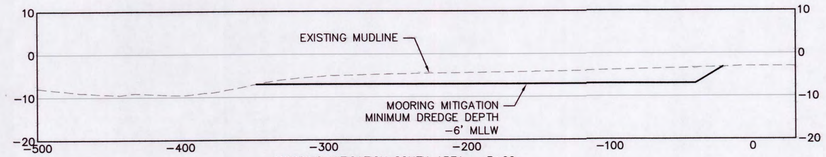

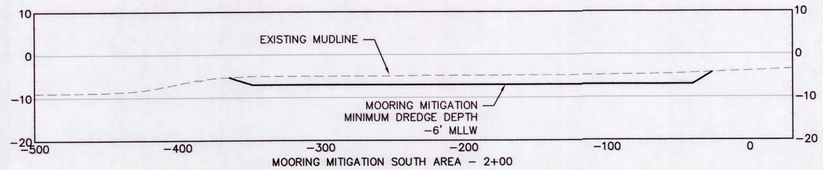

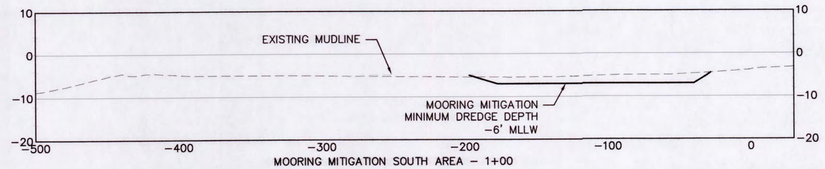

APEX

ROCKVILLE, MD
SOUTH WINDSOR, CT - BOSTON, MA - NEW BEDFORD, MA - HOLYOKE, MA

184 HIGH STREET, SUITE 502
BOSTON, MA 02210

58H CONNECTICUT AVENUE
SOUTH WINDSOR, CT

This drawings prepared by Apex for this project are instruments of Apex's service for use solely with respect to this project, and Apex shall be deemed the author of the Drawings and shall retain all common law, statutory and other reserved rights with respect thereto, including the copyright. The Documents shall not be used on other projects, for additions to this project or for completion of this project by others, except by agreement in writing and with appropriate compensation to Apex.

COMMONWEALTH OF MASSACHUSETTS
CHESTER H. MYERS
ENVIRONMENTAL
NO. 45654
REGISTERED PROFESSIONAL ENGINEER

PROJECT
NEW BEDFORD MARINE COMMERCE TERMINAL

OWNER
MASSACHUSETTS CLEAN ENERGY CENTER
55 SUMMER STREET, 9TH FLOOR
BOSTON, MA

NO.	DATE	DESCRIPTION	BY
2.	6–8–12	CROSS SECTION UPDATE	CWM
1.	12–23–11	FOR CONSTRUCTION	CHM

PROJECT NO.	6690
CADD FILE	MOORING_MIT
DESIGNED BY	CWM
DRAWN BY	CWM
CHECKED BY	CHM
DATE	8-26-11
DRAWING SCALE	

GRAPHIC SCALE

SHEET TITLE

MOORING MITIGATION AREA CROSS-SECTIONS

DRAWING NO.

X-2.4

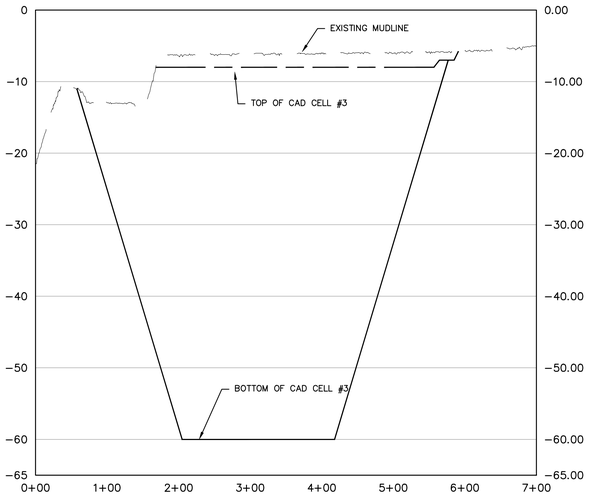

LONGITUDINAL SECTION OF CAD CELL #3

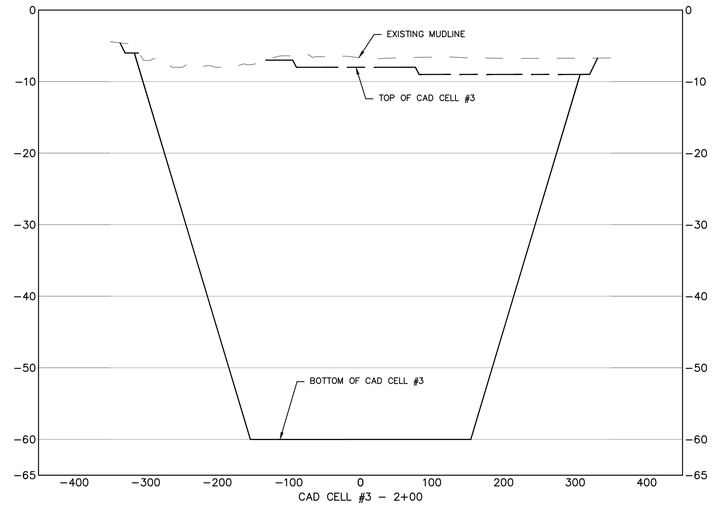

CAD CELL #3 – 2+00

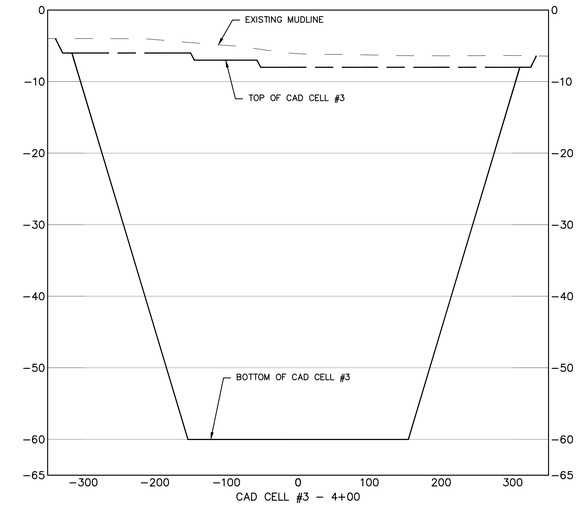

CAD CELL #3 – 4+00

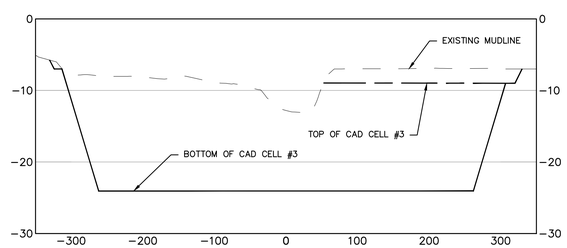

CAD CELL #3 – 1+00

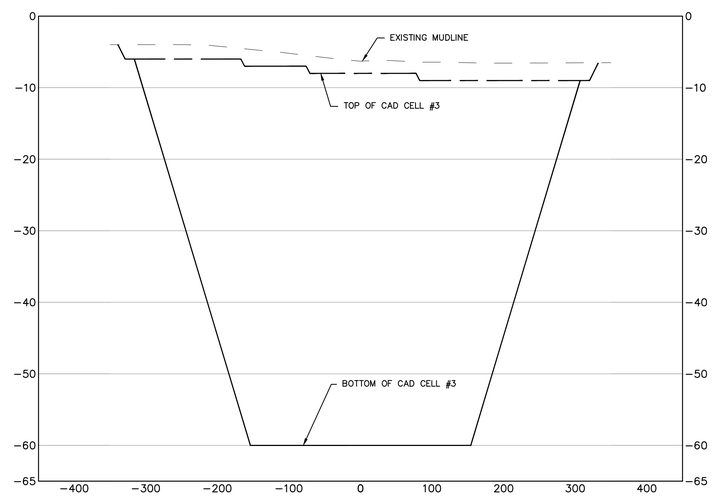

CAD CELL #3 – 3+00

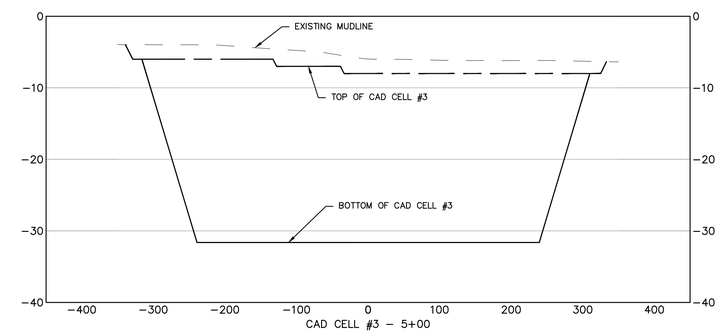

CAD CELL #3 – 5+00

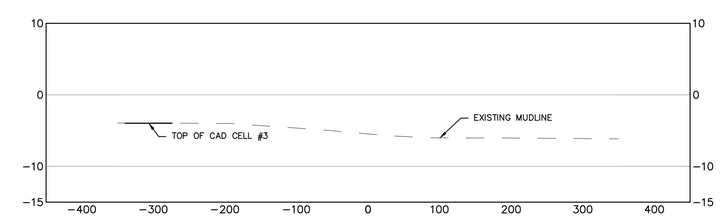

CAD CELL #3 – 6+00

NOTE:
1. FOR LOCATION OF CROSS-SECTION SEE DRAWINGS P-3.1 AND P-3.3.

APEX

ROCKVILLE, MD
SOUTH WINDSOR, CT - BOSTON, MA - NEW BEDFORD, MA - HOLYOKE, MA

184 HIGH STREET, SUITE 502
BOSTON, MA 02210

58H CONNECTICUT AVENUE
SOUTH WINDSOR, CT

This drawings prepared by Apex for this project are instruments of Apex's service for use solely with respect to this project, and Apex shall be deemed the author of the Drawing and shall retain all common law, statutory and other reserved rights with respect thereto, including the copyright. The Documents shall not be used on other projects, for additions to this project or for completion of this project by others, except by agreement in writing and with appropriate compensation to Apex. .

COMMONWEALTH OF MASSACHUSETTS
CHRISTOPHER MORRIS
ENVIRONMENTAL
No. 48693
REGISTERED PROFESSIONAL ENGINEER

12/4/12

PROJECT
NEW BEDFORD MARINE COMMERCE TERMINAL

OWNER
MASSACHUSETTS CLEAN ENERGY CENTER
55 SUMMER STREET, 9TH FLOOR
BOSTON, MASSACHUSETTS

NO.	DATE	DESCRIPTION	BY
1.	12-23-11	FOR CONSTRUCTION	CHM

PROJECT NO.	6690
CADD FILE	X-3.1-X-4.1-CROSS SECTION-NEW
DESIGNED BY	GCD
DRAWN BY	GCD
CHECKED BY	CHM
DATE	08/04/2011
DRAWING SCALE	N.T.S.

GRAPHIC SCALE

SHEET TITLE

CAD CELL #3 CROSS-SECTIONS

DRAWING NO.

X-3.1

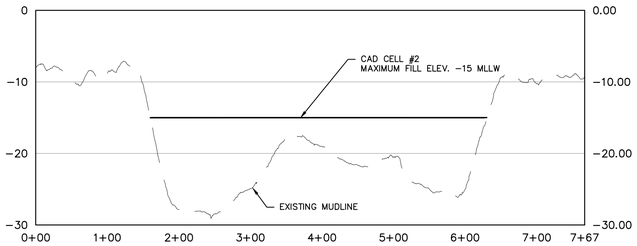

LONGITUDINAL SECTION OF CAD CELL #2

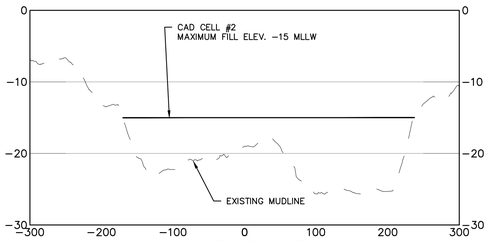

CAD CELL #2 – 4+00

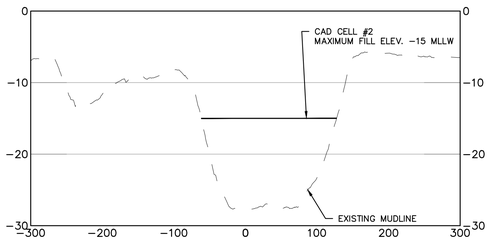

CAD CELL #2 – 2+00

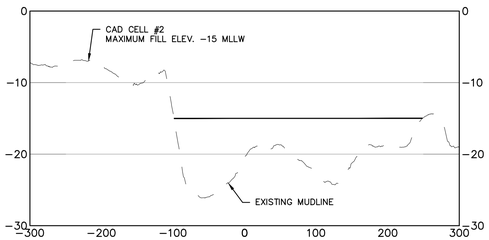

CAD CELL #2 – 5+00

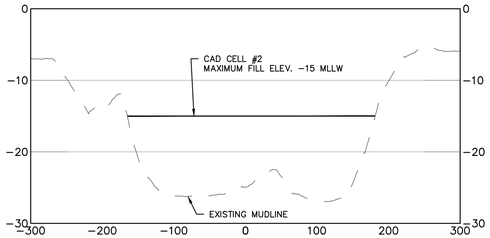

CAD CELL #2 – 3+00

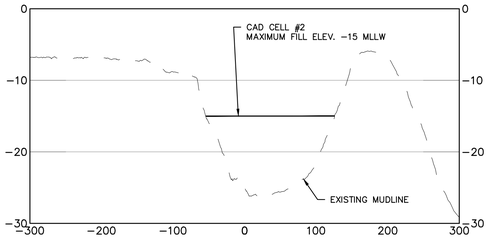

CAD CELL #2 – 6+00

NOTE:
1. FOR LOCATION OF CROSS–SECTION SEE DRAWINGS P–3.1 AND P–3.3.

APEX

ROCKVILLE, MD
SOUTH WINDSOR, CT - BOSTON, MA - NEW BEDFORD, MA - HOLYOKE, MA

184 HIGH STREET, SUITE 502
BOSTON, MA 02210

58H CONNECTICUT AVENUE
SOUTH WINDSOR, CT

This drawings prepared by Apex for this project are instruments of Apex's service for use solely with respect to this project, and Apex shall be deemed the author of the Drawing and shall retain all common law, statutory and other reserved rights with respect thereto, including the copyright. The Documents shall not be used on other projects, for additions to this project or for completion of this project by others, except by agreement in writing and with appropriate compensation to Apex. .

COMMONWEALTH OF MASSACHUSETTS
CHRISTOPHER MORRIS
ENVIRONMENTAL
No. 48693
REGISTERED PROFESSIONAL ENGINEER

12/5/12

PROJECT
NEW BEDFORD
MARINE COMMERCE
TERMINAL

OWNER
MASSACHUSETTS CLEAN ENERGY CENTER
55 SUMMER STREET, 9TH FLOOR
BOSTON, MASSACHUSETTS

NO.	DATE	DESCRIPTION	BY
1.	12–23–11	FOR CONSTRUCTION	CHM

PROJECT NO.	6690
CADD FILE	X-3.1-X-4.1-CROSS SECTION-NEW
DESIGNED BY	GCD
DRAWN BY	GCD
CHECKED BY	CHM
DATE	08/04/2011
DRAWING SCALE	N.T.S.

GRAPHIC SCALE

SHEET TITLE

CAD CELL #2
CROSS-SECTIONS

DRAWING NO.

X-3.2

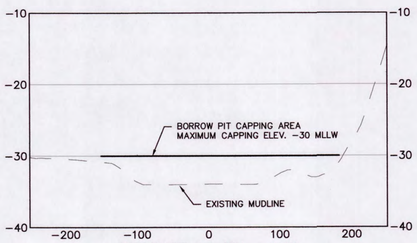

BORROW PIT CAD CELL – 4+00

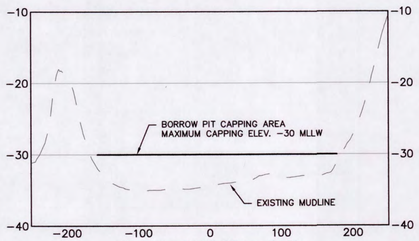

BORROW PIT CAD CELL – 5+00

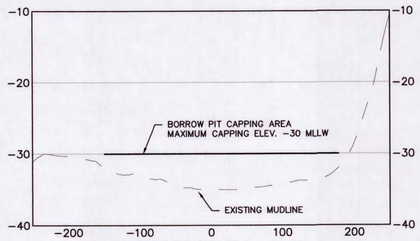

BORROW PIT CAD CELL – 6+00

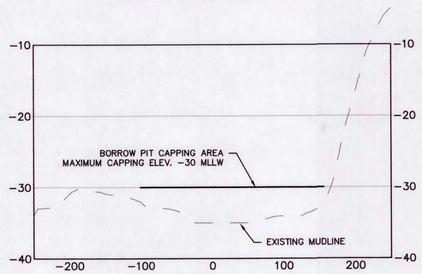

BORROW PIT CAD CELL – 7+00

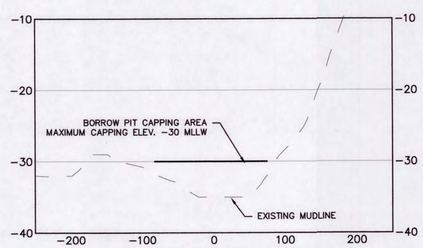

BORROW PIT CAD CELL – 8+00

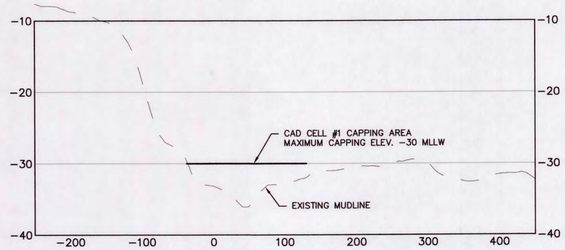

CAD CELL #1 – 6+00

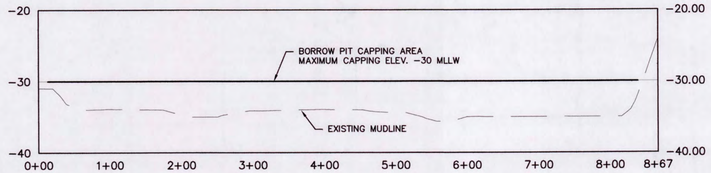

LONGITUDINAL SECTION OF BORROW PIT CAD CELL

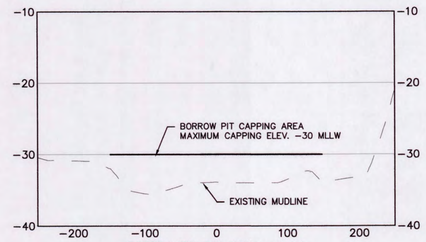

BORROW PIT CAD CELL – 1+00

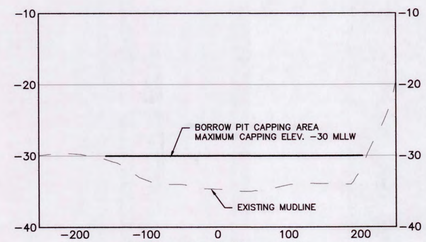

BORROW PIT CAD CELL – 2+00

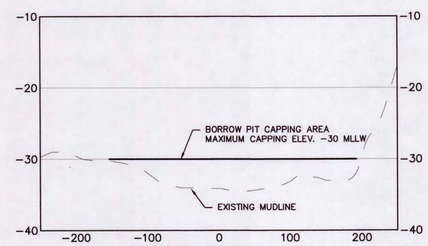

BORROW PIT CAD CELL – 3+00

NOTES:
1. FOR LOCATION OF BORROW PIT CAD CELL CAPPING AREA CROSS-SECTION, SEE DRAWING P-4.1.
2. FOR LOCATION OF CAD CELL #1 CAPPING AREA CROSS-SECTIONS, SEE DRAWING P-4.2
3. FOR LOCATION OF CAD CELL #2 DISPOSAL AREA CROSS-SECTION, SEE CRAWING P-3.2.

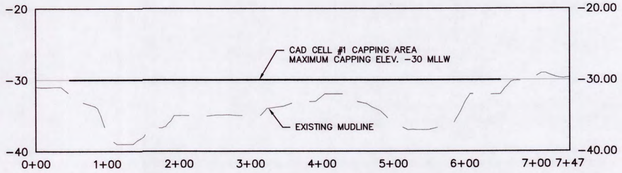

LONGITUDINAL SECTION OF CAD CELL #1

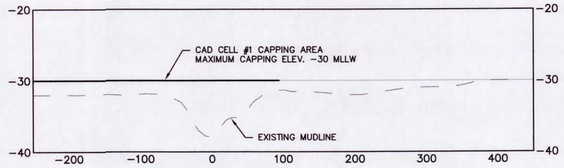

CAD CELL #1 – 1+00

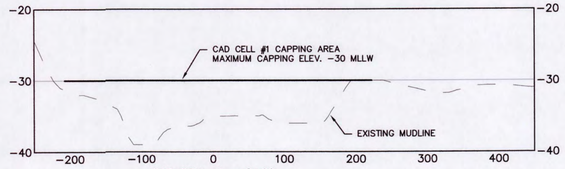

CAD CELL #1 – 2+00

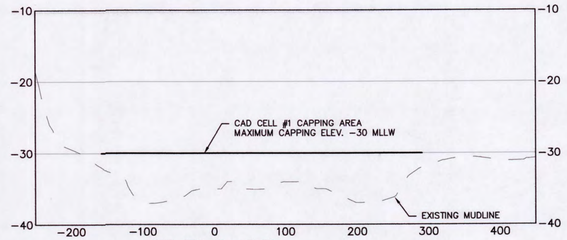

CAD CELL #1 – 3+00

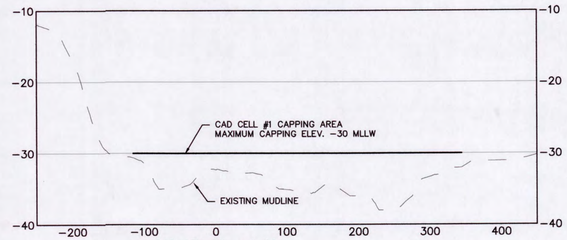

CAD CELL #1 – 4+00

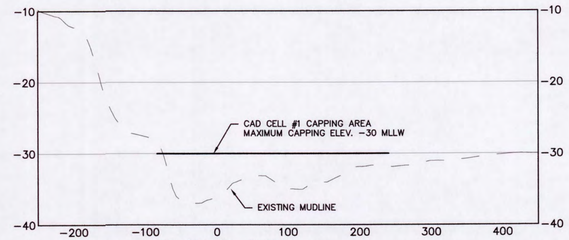

CAD CELL #1 – 5+00

APEX

ROCKVILLE, MD
SOUTH WINDSOR, CT - BOSTON, MA - NEW BEDFORD, MA - HOLYOKE, MA

184 HIGH STREET, SUITE 502
BOSTON, MA 02210

58H CONNECTICUT AVENUE
SOUTH WINDSOR, CT

This drawings prepared by Apex for this project are instruments of Apex's service for use solely with respect to this project, and Apex shall be deemed the author of the Drawing and shall retain all common law, statutory and other reserved rights with respect thereto, including the copyright. The Documents shall not be used on other projects, for additions to this project or for completion of this project by others, except by agreement in writing and with appropriate compensation to Apex .

COMMONWEALTH OF MASSACHUSETTS
CHESTER H. MYERS
ENVIRONMENTAL
NO. 45654
REGISTERED PROFESSIONAL ENGINEER

PROJECT
NEW BEDFORD MARINE COMMERCE TERMINAL

OWNER
MASSACHUSETTS CLEAN ENERGY CENTER
55 SUMMER STREET, 9TH FLOOR
BOSTON, MASSACHUSETTS

NO.	DATE	DESCRIPTION	BY
1.	12-23-11	FOR CONSTRUCTION	CHM

PROJECT NO.	6690
CADD FILE	X-3.1-X-4.1-CROSS SECTION-NEW
DESIGNED BY	GCD
DRAWN BY	GCD
CHECKED BY	CHM
DATE	08/04/2011
DRAWING SCALE	N.T.S.

GRAPHIC SCALE

SHEET TITLE

BORROW PIT AND CAD CELL #1 CAPPING AREA CROSS-SECTIONS

DRAWING NO.

X-4.1

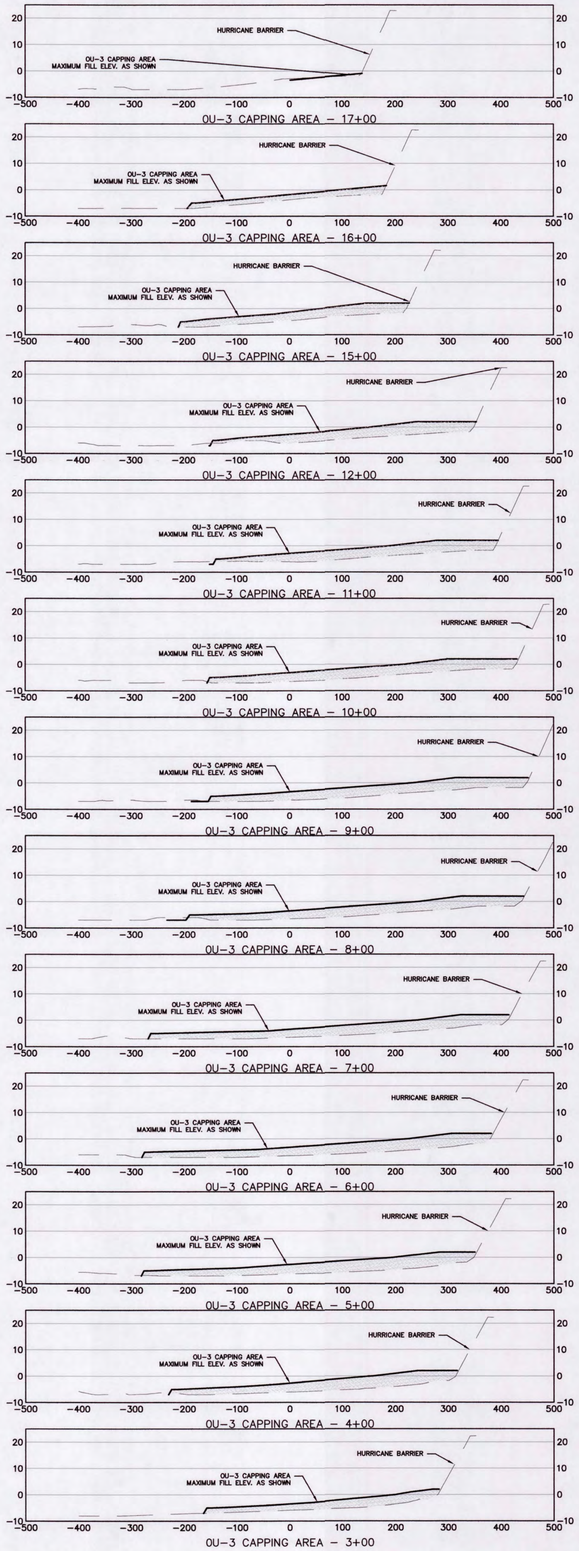

NOTE:
1. FOR LOCATION OF OU-3 CAPPING AREA CROSS-SECTION, SEE DRAWING P-5.2.

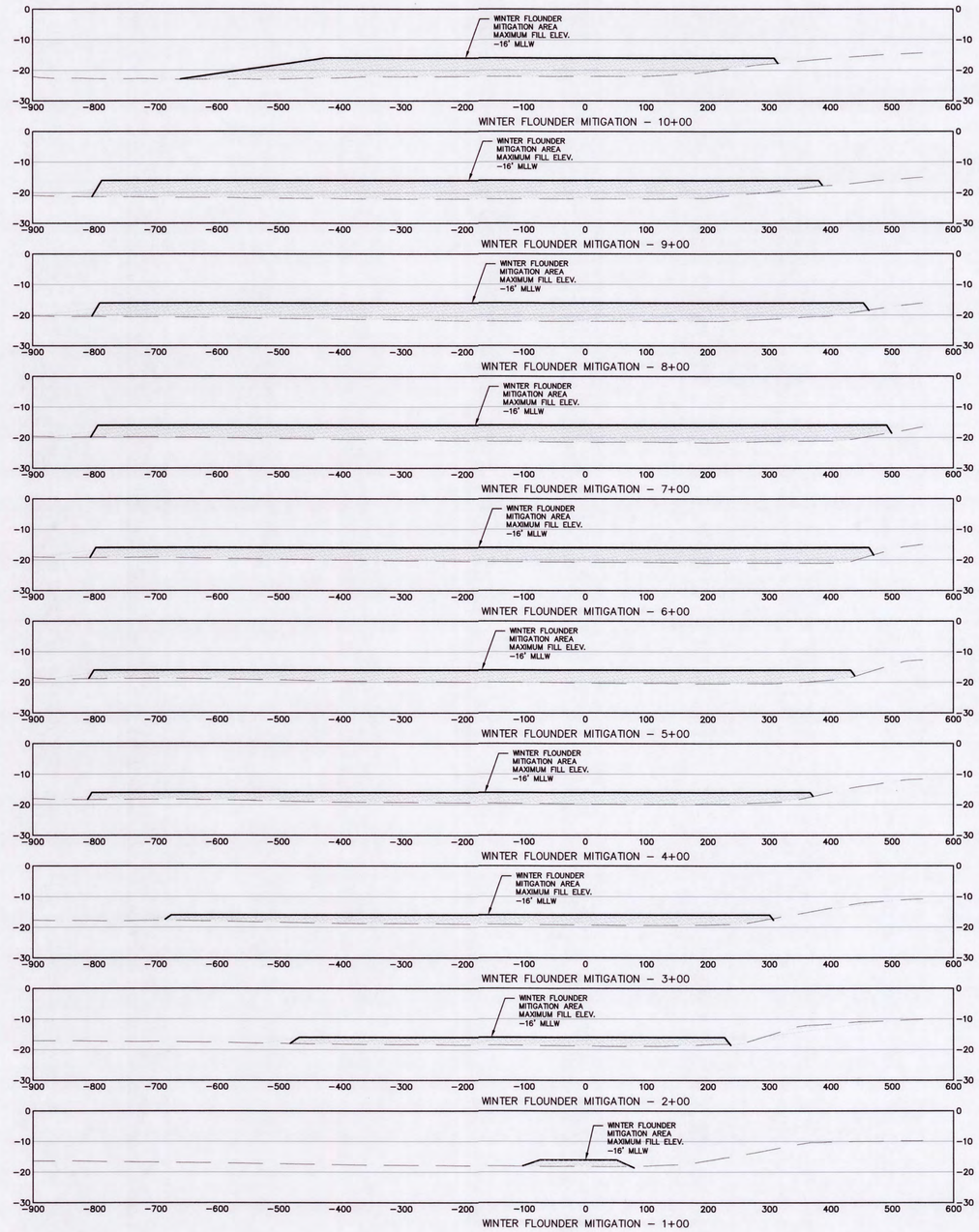

NOTE:
1. FOR LOCATION OF WINTER FLOUNDER MITIGATION AREA CROSS-SECTION, SEE DRAWING P-5.1.

APEX

ROCKVILLE, MD
SOUTH WINDSOR, CT - BOSTON, MA -
NEW BEDFORD, MA - HOLYOKE, MA

184 HIGH STREET, SUITE 502
BOSTON, MA 02210

58H CONNECTICUT AVENUE
SOUTH WINDSOR, CT

The drawings prepared by Apex for this project are instruments of Apex's service for use solely with respect to this project, and Apex shall be deemed the author of the Drawing and shall retain all common law, statutory and other reserved rights with respect thereto, including the copyright. The Documents shall not be used on other projects, for additions to this project or for completion of this project by others, except by agreement in writing and with appropriate compensation to Apex. .

COMMONWEALTH OF MASSACHUSETTS
CHESTER H. MYERS
ENVIRONMENTAL
NO. 45654
7/19/11
REGISTERED
PROFESSIONAL ENGINEER

PROJECT
NEW BEDFORD MARINE COMMERCE TERMINAL

OWNER
MASSACHUSETTS CLEAN ENERGY CENTER
55 SUMMER STREET, 9TH FLOOR
BOSTON, MA

NO.	DATE	DESCRIPTION	BY
1.	12-23-11	FOR CONSTRUCTION	CHM

PROJECT NO.	6690
CADD FILE	MIT_OU3_FLNDR
DESIGNED BY	CWM
DRAWN BY	CWM
CHECKED BY	CHM
DATE	8-8-11
DRAWING SCALE	NTS

GRAPHIC SCALE

SHEET TITLE

OU-3 AND WINTER FLOUNDER CAPPING AREA CROSS-SECTIONS

DRAWING NO.

X-5.1

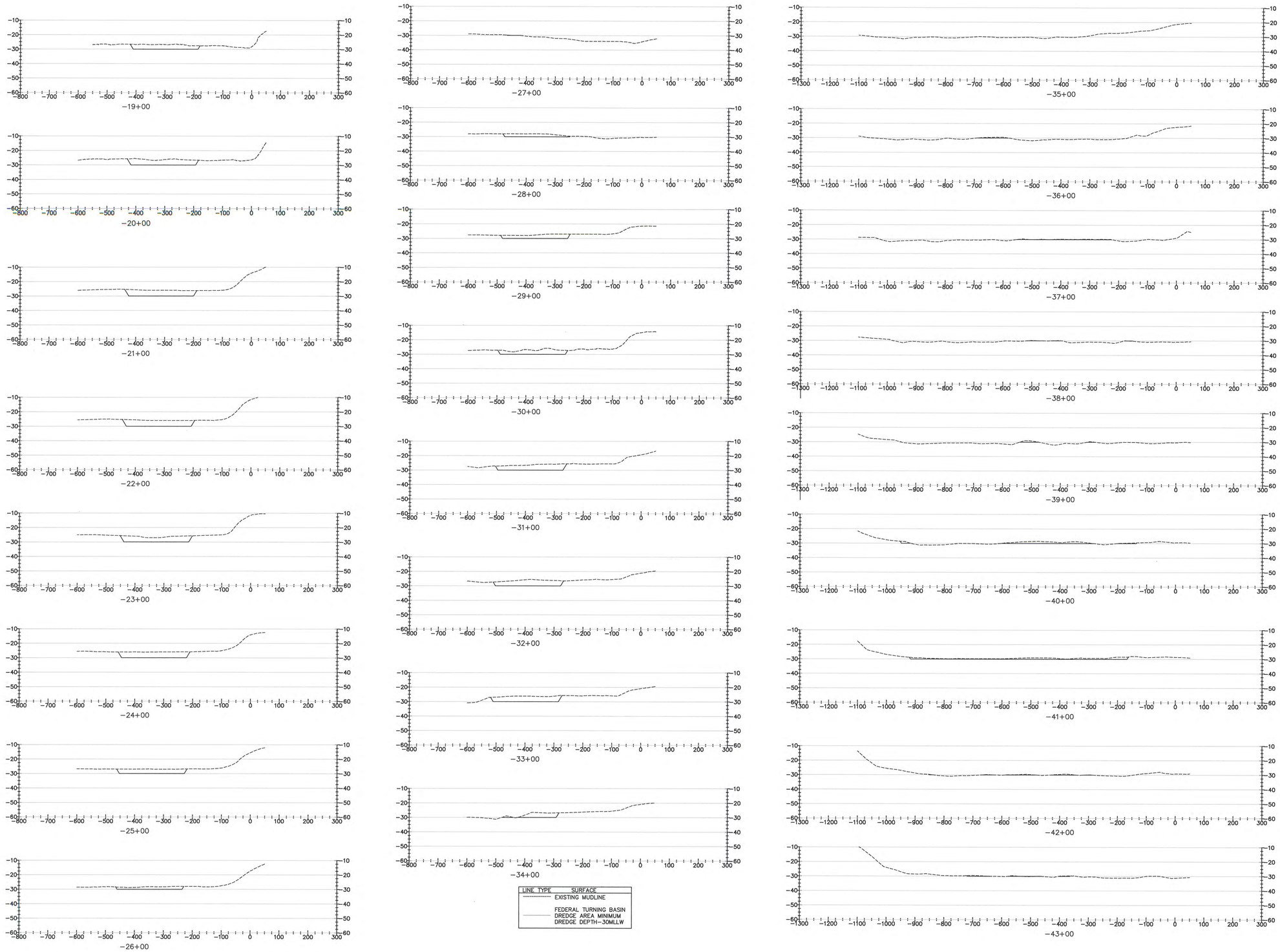

LINE TYPE	SURFACE
	EXISTING MUDLINE
	FEDERAL TURNING BASIN DREDGE AREA MINIMUM DREDGE DEPTH-30MLLW

APEX

ROCKVILLE, MD
SOUTH WINDSOR, CT - BOSTON, MA - NEW BEDFORD, MA - HOLYOKE, MA

184 HIGH STREET, SUITE 502
BOSTON, MA 02210

58H CONNECTICUT AVENUE
SOUTH WINDSOR, CT

This drawings prepared by Apex for this project are instruments of Apex's service for use solely with respect to this project, and Apex shall be deemed the author of the Drawing and shall retain all common law, statutory and other reserved rights with respect thereto, including the copyright. The Documents shall not be used on other projects, for additions to this project or for completion of this project by others, except by agreement in writing and with appropriate compensation to Apex. .

COMMONWEALTH OF MASSACHUSETTS
CHESTER H. MYERS
ENVIRONMENTAL
NO. 15654
5/17/13
REGISTERED PROFESSIONAL ENGINEER

PROJECT
NEW BEDFORD MARINE COMMERCE TERMINAL

OWNER
MASSACHUSETTS CLEAN ENERGY CENTER
55 SUMMER STREET, 9TH FLOOR
BOSTON, MASSACHUSETTS

NO.	DATE	DESCRIPTION	BY

PROJECT NO.	6690
CADD FILE	X-5.2-CROSS SECTION
DESIGNED BY	CWM
DRAWN BY	CWM
CHECKED BY	CHM
DATE	11-28-12
DRAWING SCALE	N.T.S

GRAPHIC SCALE

SHEET TITLE

FEDERAL TURNING BASIN DREDGE AREA CROSS SECTIONS

DRAWING NO.

X-5.2

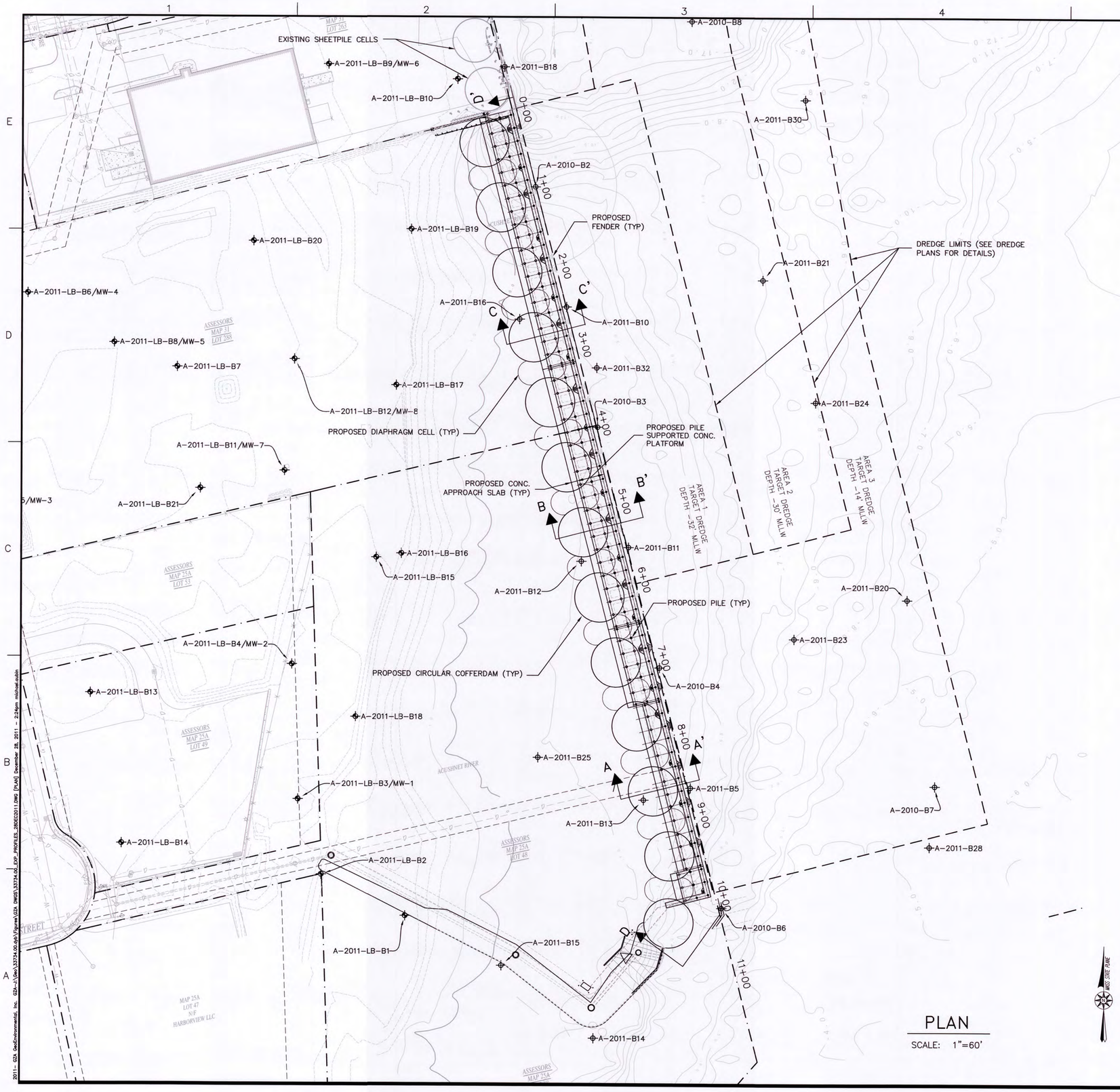

PLAN

SCALE: 1"=60'

NOTES:

1. PLANS/FIGURES DEVELOPED FROM AUTOCAD DRAWING FILES PROVIDED BY APEX ON OCTOBER 28, 2011.
2. BORINGS WERE PERFORMED BY NEW HAMPSHIRE BORING, CO. BETWEEN SEPTEMBER 14, 2010 AND MAY 25, 2011 AND OBSERVED BY APEX PERSONNEL.
3. TEST PILE DRIVING INFORMATION WAS FROM TEST PILE DRIVING REPORT" PREPARED BY CLE ENGINEERING, INC. DATED AUGUST 18, 2011, AND REVISED NOVEMBER 11, 2011 AND INCLUDED IN "DATA REPORT – NEW BEDFORD MARINE COMMERCE TERMINAL" PREPARED BY APEX.
4. ONLY BORINGS IN NEAR PROXIMITY TO THE BULKHEAD ARE SHOWN ON THIS PLAN SEE "DATA REPORT – NEW BEDFORD MARINE COMMERCE TERMINAL" PREPARED BY APEX FOR COMPLETE SET OF SUBSURFACE DATA.
5. REFER TO EARTHWORK SPECIFICATION 02200 FOR MATERIAL REUSE INTENT, UNSUITABLE MATERIAL REMOVAL AND COMPACTION REQUIREMENTS.

APEX

ROCKVILLE, MD
SOUTH WINDSOR, CT - BOSTON, MA - NEW BEDFORD, MA - HOLYOKE, MA

184 HIGH STREET, SUITE 502
BOSTON, MA 02210

58H CONNECTICUT AVENUE
SOUTH WINDSOR, CT

This drawings prepared by Apex for this project are instruments of Apex's service for use solely with respect to this project, and Apex shall be deemed the author of the Drawing and shall retain all common law, statutory and other reserved rights with respect thereto, including the copyright. The Documents shall not be used on other projects, for additions to this project or for completion of this project by others, except by agreement in writing and with appropriate compensation to Apex.

GZA
GeoEnvironmental, Inc.
Engineers and Scientists
530 Broadway
Providence, RI 02909
(401) 421-4140

It is a violation of law for any person unless he is acting under the direction of a licensed professional engineer to alter this document. This drawing was prepared at the scale indicated in the title block. Inaccuracies in the stated scale may be introduced when drawings are reproduced by any means. (Use the graphic scale bar to determine the actual scale of this drawing)

PROJECT

NEW BEDFORD MARINE COMMERCE TERMINAL

OWNER

MASSACHUSETTS CLEAN ENERGY COUNCIL
55 SUMMER STREET, 9TH FLOOR
BOSTON, MASSACHUSETTS

NO.	DATE	DESCRIPTION	BY
1	12/23/11	FOR CONSTRUCTION	TEB

PROJECT NO.	33734.00
CADD FILE	33734_EXP_PROFILES _23DEC2011.DWG
DESIGNED BY	JJM
DRAWN BY	MA/DL
CHECKED BY	DYB
DATE	12/2/2011
DRAWING SCALE	AS NOTED

GRAPHIC SCALE

AS NOTED

COMMONWEALTH OF MASSACHUSETTS
THOMAS E. BILLUPS
CIVIL
No. 32634
REGISTERED PROFESSIONAL ENGINEER
12-23-11

SHEET TITLE

CROSS SECTION LOCATION PLAN

DRAWING NO.

X-6.1

2011- GZA GeoEnvironmental, Inc. GZA-J:\Geo\33734.00.dgb\Figures\GZA DWGS\33734.00_EXP_PROFILES_23DEC2011.DWG [PLAN] December 28, 2011 - 2:24pm michael.mahn

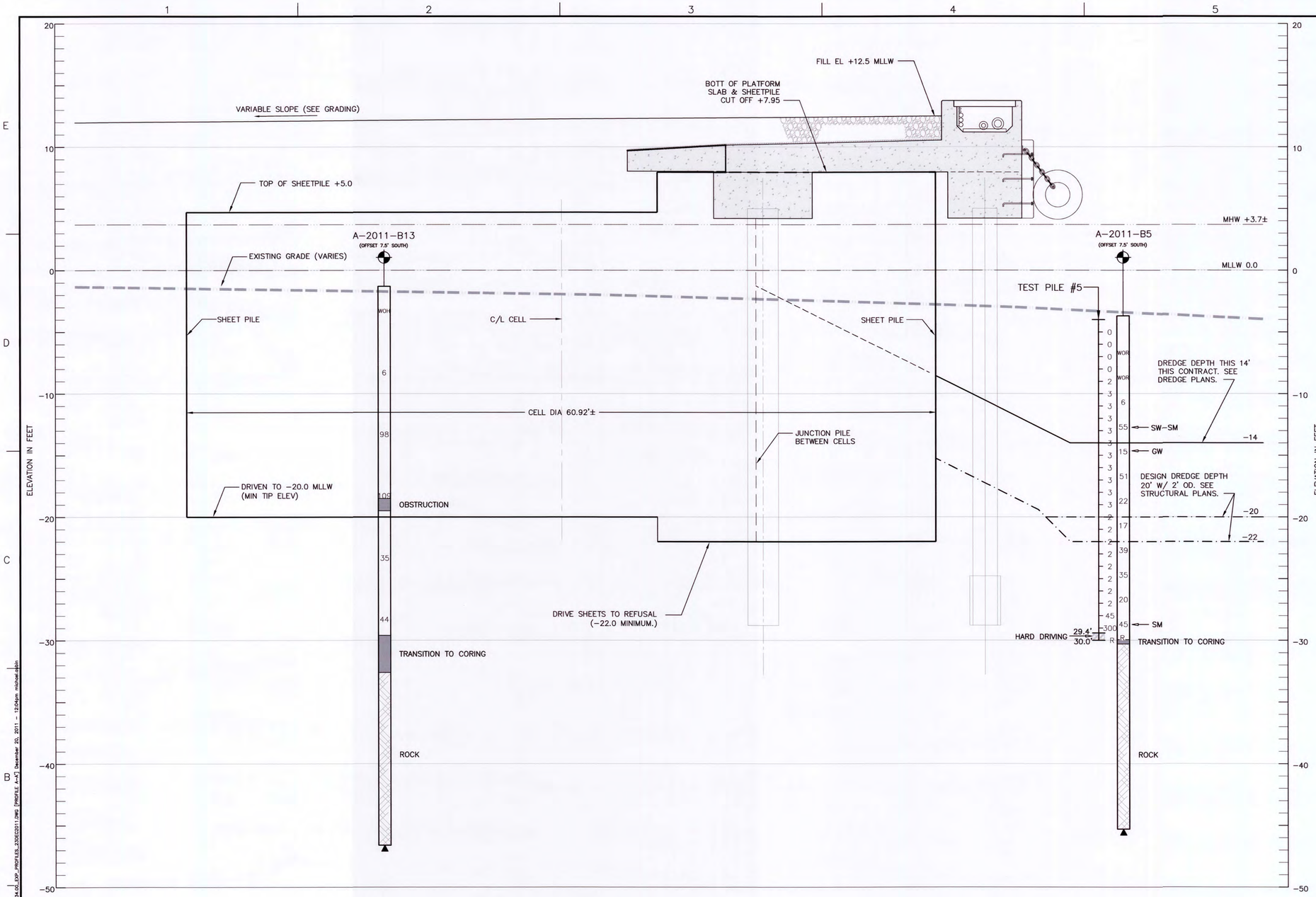

SUBSURFACE PROFILE A – A'

SCALE: 1"=4'

NOTE

SEE STRUCTURAL SHEETS FOR FURTHER DETAILS OF COFFERDAM AND RELIEVING PLATFORM.

LEGEND:

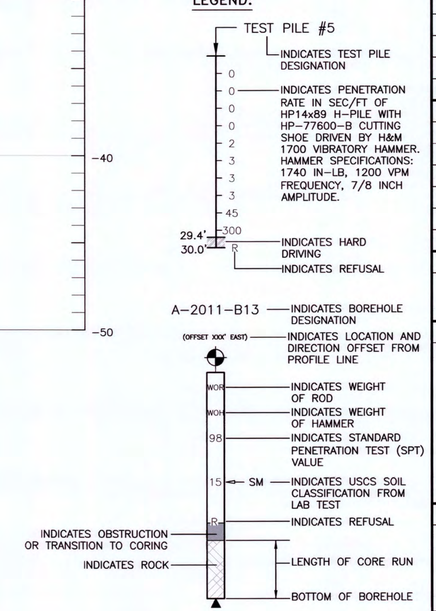

COMMONWEALTH OF MASSACHUSETTS
THOMAS E. BILLUPS
CIVIL
No. 32836
REGISTERED PROFESSIONAL ENGINEER
12-23-11

APEX

ROCKVILLE, MD
SOUTH WINDSOR, CT - BOSTON, MA - NEW BEDFORD, MA - HOLYOKE, MA

184 HIGH STREET, SUITE 502
BOSTON, MA 02210

58H CONNECTICUT AVENUE
SOUTH WINDSOR, CT

This drawings prepared by Apex for this project are instruments of Apex's service for use solely with respect to this project, and Apex shall be deemed the author of the Drawing and shall retain all common law, statutory and other reserved rights with respect thereto, including the copyright. The Documents shall not be used on other projects, for additions to this project or for completion of this project by others, except by agreement in writing and with appropriate compensation to Apex. .

GZA
GeoEnvironmental, Inc.
Engineers and Scientists
530 Broadway
Providence, RI 02909
(401) 421-4140

It is a violation of law for any person unless he is acting under the direction of a licensed professional engineer to alter this document. This drawing was prepared at the scale indicated in the title block. Inaccuracies in the stated scale may be introduced when drawings are reproduced by any means. (Use the graphic scale bar to determine the actual scale of this drawing)

PROJECT
NEW BEDFORD MARINE COMMERCE TERMINAL

OWNER
MASSACHUSETTS CLEAN ENERGY COUNCIL
55 SUMMER STREET, 9TH FLOOR
BOSTON, MASSACHUSETTS

NO.	DATE	DESCRIPTION	BY
1	12/23/11	FOR CONSTRUCTION	TEB

PROJECT NO.	33734.00
CADD FILE	33734_EXP_PROFILES _23DEC2011.DWG
DESIGNED BY	JJM
DRAWN BY	MA/DL
CHECKED BY	DYB
DATE	12/2/2011
DRAWING SCALE	AS NOTED

GRAPHIC SCALE
AS NOTED

SHEET TITLE
PROFILE SECTION A-A'

DRAWING NO.
X-6.2

2011- GZA GeoEnvironmental, Inc. GZA-J:\Dwg\33734.00.dgn\Figures\GZA PROFILES\33734.00_EXP_PROFILES_23DEC2011.DWG [PROFILE A-A'] December 23, 2011 - 12:04pm michael.dion

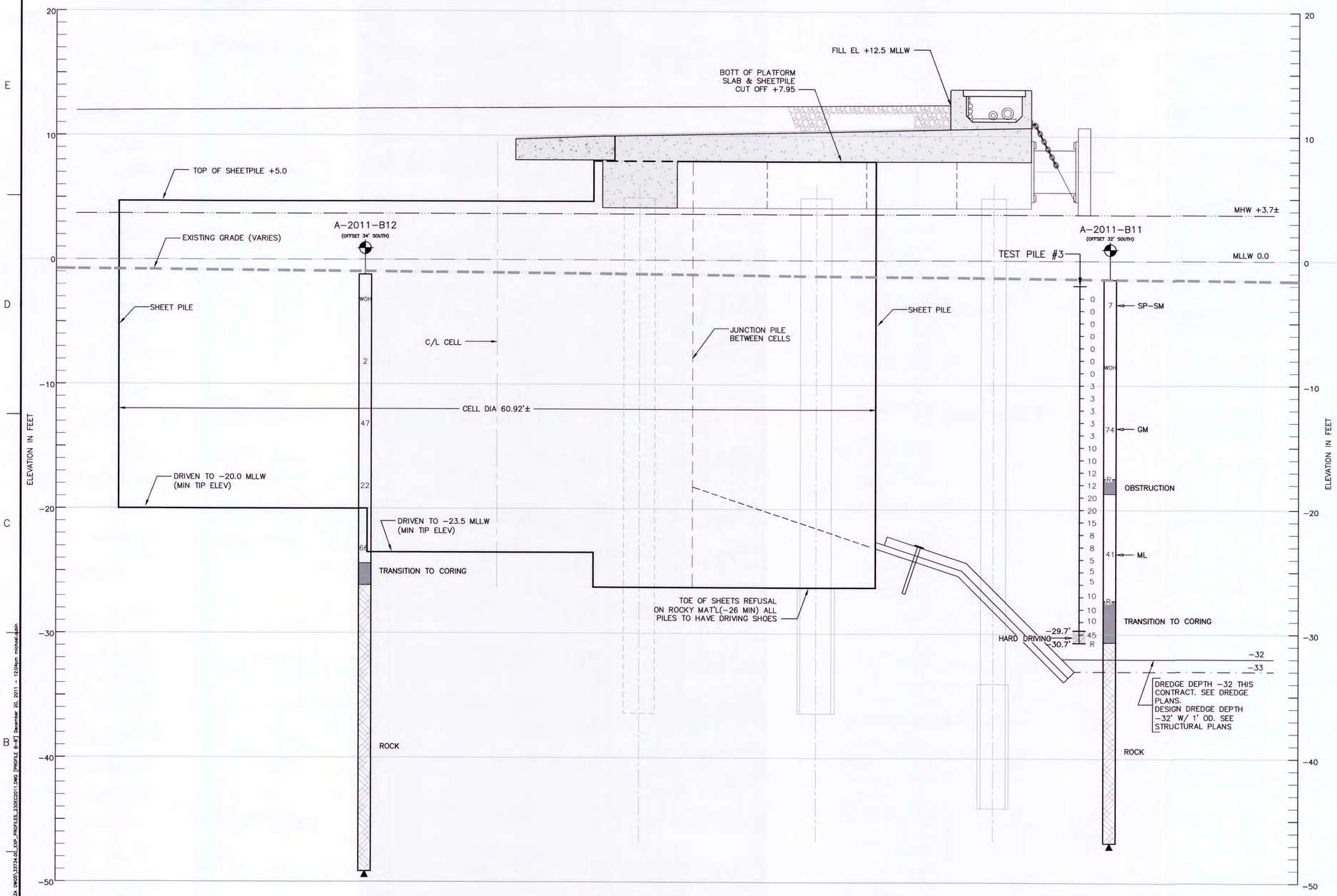

SUBSURFACE PROFILE B – B'

SCALE: 1"=4'

NOTE

SEE STRUCTURAL SHEETS FOR FURTHER DETAILS OF COFFERDAM AND RELIEVING PLATFORM.

LEGEND:

- TEST PILE #3 — INDICATES TEST PILE DESIGNATION
- INDICATES PENETRATION RATE IN SEC/FT OF HP14x89 H-PILE WITH HP-77600-B CUTTING SHOE DRIVEN BY H&M 1700 VIBRATORY HAMMER. HAMMER SPECIFICATIONS: 1740 IN-LB, 1200 VPM FREQUENCY, 7/8 INCH AMPLITUDE.
- 29.4' / 30.0' — INDICATES HARD DRIVING; INDICATES REFUSAL
- A-2011-B11 — INDICATES BOREHOLE DESIGNATION
- (OFFSET XXX' EAST) — INDICATES LOCATION AND DIRECTION OFFSET FROM PROFILE LINE
- WOR — INDICATES WEIGHT OF ROD
- WOH — INDICATES WEIGHT OF HAMMER
- 98 — INDICATES STANDARD PENETRATION TEST (SPT) VALUE
- 15 SM — INDICATES USCS SOIL CLASSIFICATION FROM LAB TEST
- R — INDICATES REFUSAL
- INDICATES OBSTRUCTION OR TRANSITION TO CORING
- INDICATES ROCK
- LENGTH OF CORE RUN
- BOTTOM OF BOREHOLE

COMMONWEALTH OF MASSACHUSETTS — THOMAS E. BILLUPS — CIVIL — No. 22839 — REGISTERED PROFESSIONAL ENGINEER — 12-23-11

APEX

ROCKVILLE, MD
SOUTH WINDSOR, CT - BOSTON, MA - NEW BEDFORD, MA - HOLYOKE, MA

184 HIGH STREET, SUITE 502
BOSTON, MA 02210

58H CONNECTICUT AVENUE
SOUTH WINDSOR, CT

This drawings prepared by Apex for this project are instruments of Apex's service for use solely with respect to this project, and Apex shall be deemed the author of the Drawing and shall retain all common law, statutory and other reserved rights with respect thereto, including the copyright. The Documents shall not be used on other projects, for additions to this project or for completion of this project by others, except by agreement in writing and with appropriate compensation to Apex.

GZA
GeoEnvironmental, Inc.
Engineers and Scientists
530 Broadway
Providence, RI 02909
(401) 421-4140

It is a violation of law for any person unless he is acting under the direction of a licensed professional engineer to alter this document. This drawing was prepared at the scale indicated in the title block. Inaccuracies in the stated scale may be introduced when drawings are reproduced by any means. (Use the graphic scale bar to determine the actual scale of this drawing)

PROJECT
NEW BEDFORD MARINE COMMERCE TERMINAL

OWNER
MASSACHUSETTS CLEAN ENERGY COUNCIL
55 SUMMER STREET, 9TH FLOOR
BOSTON, MASSACHUSETTS

NO.	DATE	DESCRIPTION	BY
1	12/23/11	FOR CONSTRUCTION	TEB

PROJECT NO.	33734.00
CADD FILE	33734_EXP_PROFILES_23DEC2011.DWG
DESIGNED BY	JJM
DRAWN BY	MA/DL
CHECKED BY	DYB
DATE	12/2/2011
DRAWING SCALE	AS NOTED

GRAPHIC SCALE
AS NOTED

SHEET TITLE
PROFILE SECTION B-B'

DRAWING NO.
X-6.3

2011 - GZA GeoEnvironmental, Inc. GZA-J:\Geo\33734.00.dgn\Figures\GZA DWGS\33734.00_EXP_PROFILES_23DEC2011.DWG [PROFILE B-B'] December 20, 2011 - 12:04pm michael.dubin

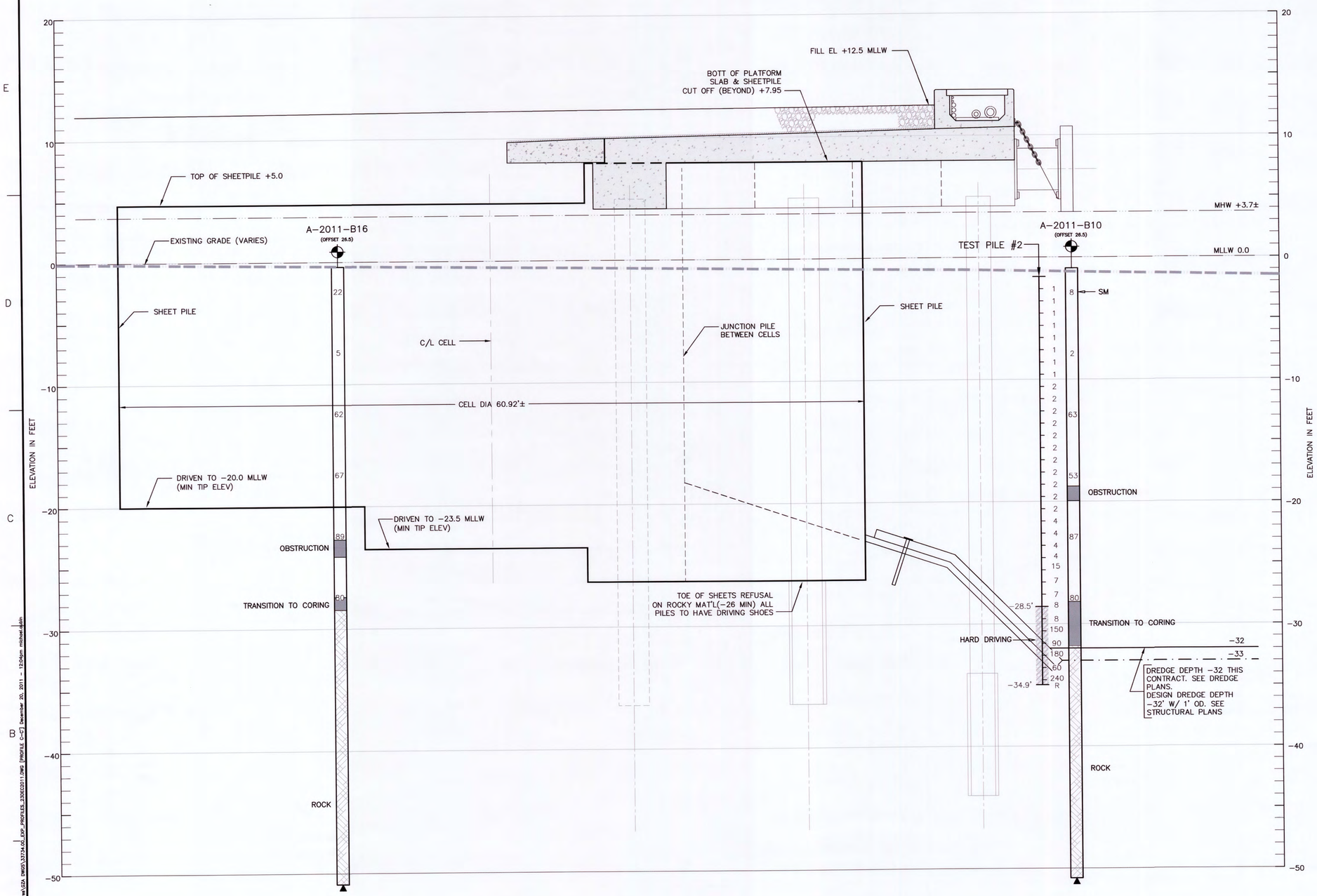

SUBSURFACE PROFILE C – C'

SCALE: 1"=4'

0 2' 4' 8' 16'
1" = 4'

NOTE

SEE STRUCTURAL SHEETS FOR FURTHER DETAILS OF COFFERDAM AND RELIEVING PLATFORM.

LEGEND:

- TEST PILE #2 — INDICATES TEST PILE DESIGNATION
- 0 — INDICATES PENETRATION RATE IN SEC/FT OF HP14x89 H-PILE WITH HP-77600-B CUTTING SHOE DRIVEN BY H&M 1700 VIBRATORY HAMMER. HAMMER SPECIFICATIONS: 1740 IN-LB, 1200 VPM FREQUENCY, 7/8 INCH AMPLITUDE.
- 29.4' / 30.0' — INDICATES HARD DRIVING
- R — INDICATES REFUSAL
- A-2011-B10 — INDICATES BOREHOLE DESIGNATION
- (OFFSET XXX' EAST) — INDICATES LOCATION AND DIRECTION OFFSET FROM PROFILE LINE
- WOR — INDICATES WEIGHT OF ROD
- WOH — INDICATES WEIGHT OF HAMMER
- 98 — INDICATES STANDARD PENETRATION TEST (SPT) VALUE
- 15 SM — INDICATES USCS SOIL CLASSIFICATION FROM LAB TEST
- R — INDICATES REFUSAL
- INDICATES OBSTRUCTION OR TRANSITION TO CORING
- INDICATES ROCK
- LENGTH OF CORE RUN
- BOTTOM OF BOREHOLE

COMMONWEALTH OF MASSACHUSETTS
THOMAS E. BILLUPS
CIVIL
No. 32836
REGISTERED PROFESSIONAL ENGINEER
12-23-11

APEX

ROCKVILLE, MD
SOUTH WINDSOR, CT - BOSTON, MA - NEW BEDFORD, MA - HOLYOKE, MA

184 HIGH STREET, SUITE 502
BOSTON, MA 02210

58H CONNECTICUT AVENUE
SOUTH WINDSOR, CT

This drawings prepared by Apex for this project are instruments of Apex's service for use solely with respect to this project, and Apex shall be deemed the author of the Drawing and shall retain all common law, statutory and other reserved rights with respect thereto, including the copyright. The Documents shall not be used on other projects, for additions to this project or for completion of this project by others, except by agreement in writing and with appropriate compensation to Apex .

GZA
GeoEnvironmental, Inc.
Engineers and Scientists
530 Broadway
Providence, RI 02909
(401) 421-4140

It is a violation of law for any person unless he is acting under the direction of a licensed professional engineer to alter this document. This drawing was prepared at the scale indicated in the title block. Inaccuracies in the stated scale may be introduced when drawings are reproduced by any means. (Use the graphic scale bar to determine the actual scale of this drawing)

PROJECT
NEW BEDFORD MARINE COMMERCE TERMINAL

OWNER
MASSACHUSETTS CLEAN ENERGY COUNCIL
55 SUMMER STREET, 9TH FLOOR
BOSTON, MASSACHUSETTS

NO.	DATE	DESCRIPTION	BY
1	12/23/11	FOR CONSTRUCTION	TEB

PROJECT NO.	33734.00
CADD FILE	33734_EXP_PROFILES_23DEC2011.DWG
DESIGNED BY	JJM
DRAWN BY	MA/DL
CHECKED BY	DYB
DATE	12/2/2011
DRAWING SCALE	AS NOTED

GRAPHIC SCALE
AS NOTED

SHEET TITLE
PROFILE SECTION C-C'

DRAWING NO.
X-6.4

2011- GZA GeoEnvironmental, Inc. GZA-J:\Geo\33734.00.00\Figures\GZA DWGS\33734.00_EXP_PROFILES_23DEC2011.DWG [PROFILE C-C'] December 20, 2011 - 12:04am mitchell.dylon

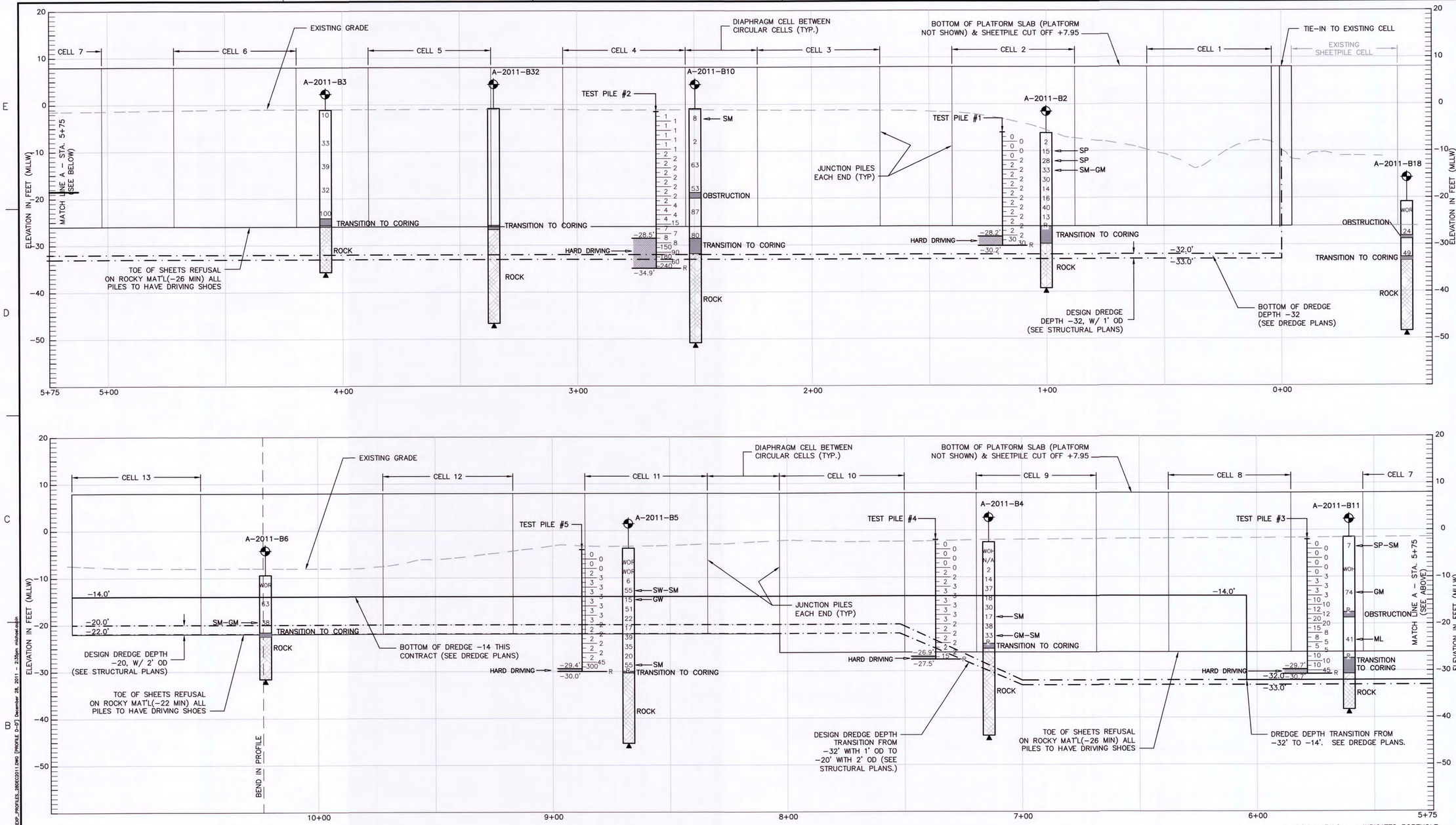

SUBSURFACE PROFILE D – D'

SCALE: HORIZ. 1"=20'
VERT. 1"=10'

NOTE

1. RELIEVING PLATFORM AND OTHER STRUCTURAL DETAILS NOT SHOWN FOR CLARITY. SEE STRUCTURAL DRAWINGS FOR FURTHER DETAILS.
2. SEE DREDGE PLANS FOR DREDGE DEPTHS THIS CONTRACT.
3. SEE STRUCTURAL PLANS FOR DESIGN DREDGE DEPTH FOR FUTURE DREDGING.

COMMONWEALTH OF MASSACHUSETTS
THOMAS E. BILLUPS
CIVIL
No. 32838
REGISTERED PROFESSIONAL ENGINEER
12-2-11

LEGEND:

TEST PILE #5 — INDICATES TEST PILE DESIGNATION

0 — INDICATES PENETRATION RATE IN SEC/FT OF HP14x89 H-PILE WITH HP-77600-B CUTTING SHOE DRIVEN BY H&M 1700 VIBRATORY HAMMER. HAMMER SPECIFICATIONS: 1740 IN-LB, 1200 VPM FREQUENCY, 7/8 INCH AMPLITUDE.

29.4' / 30.0' — INDICATES HARD DRIVING

R — INDICATES REFUSAL

LEGEND:

A-2011-B10 — INDICATES BOREHOLE DESIGNATION

(OFFSET XXX' EAST) — INDICATES LOCATION AND DIRECTION OFFSET FROM PROFILE LINE

WOR — INDICATES WEIGHT OF ROD

WOH — INDICATES WEIGHT OF HAMMER

98 — INDICATES STANDARD PENETRATION TEST (SPT) VALUE

15 — SM — INDICATES USCS SOIL CLASSIFICATION FROM LAB TEST

R — INDICATES REFUSAL

INDICATES OBSTRUCTION OR TRANSITION TO CORING

INDICATES ROCK

LENGTH OF CORE RUN

BOTTOM OF BOREHOLE

APEX

ROCKVILLE, MD
SOUTH WINDSOR, CT - BOSTON, MA - NEW BEDFORD, MA - HOLYOKE, MA

184 HIGH STREET, SUITE 502
BOSTON, MA 02210

58H CONNECTICUT AVENUE
SOUTH WINDSOR, CT

This drawings prepared by Apex for this project are instruments of Apex's service for use solely with respect to this project, and Apex shall be deemed the author of the Drawing and shall retain all common law, statutory and other reserved rights with respect thereto, including the copyright. The Documents shall not be used on other projects, for additions to this project or for completion of this project by others, except by agreement in writing and with appropriate compensation to Apex. .

GZA
GeoEnvironmental, Inc.
Engineers and Scientists
530 Broadway
Providence, RI 02909
(401) 421-4140

It is a violation of law for any person unless he is acting under the direction of a licensed professional engineer to alter this document. This drawing was prepared at the scale indicated in the title block. Inaccuracies in the stated scale may be introduced when drawings are reproduced by any means. (Use the graphic scale bar to determine the actual scale of this drawing)

PROJECT
NEW BEDFORD MARINE COMMERCE TERMINAL

OWNER
MASSACHUSETTS CLEAN ENERGY COUNCIL
55 SUMMER STREET, 9TH FLOOR
BOSTON, MASSACHUSETTS

NO.	DATE	DESCRIPTION	BY
1	12/23/11	FOR CONSTRUCTION	TEB

PROJECT NO.	33734.00
CADD FILE	33734_EXP_PROFILES _2011EC2011.DWG
DESIGNED BY	JJM
DRAWN BY	MA/DL
CHECKED BY	DYB
DATE	12/2/2011
DRAWING SCALE	AS NOTED

GRAPHIC SCALE
AS NOTED

SHEET TITLE
PROFILE SECTION D-D'

DRAWING NO.
X-6.5

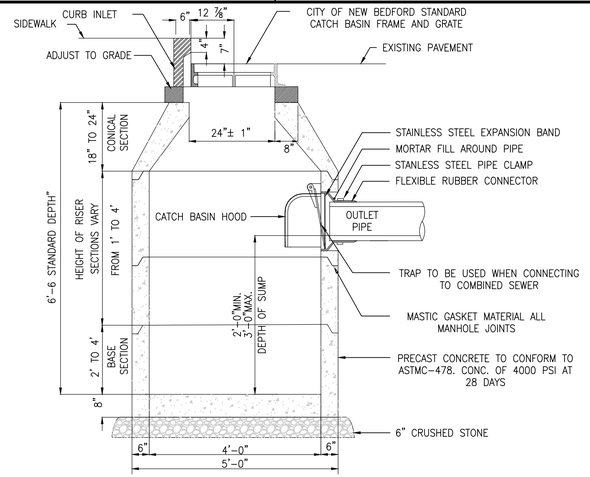

PRECAST CONCRETE CATCH BASIN

NOT TO SCALE

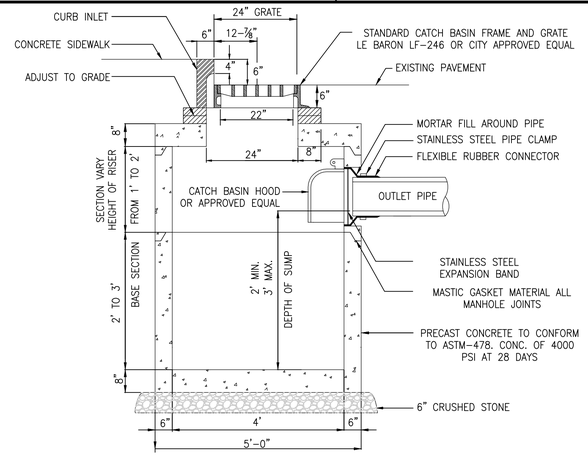

SHALLOW CATCH BASIN

NOT TO SCALE

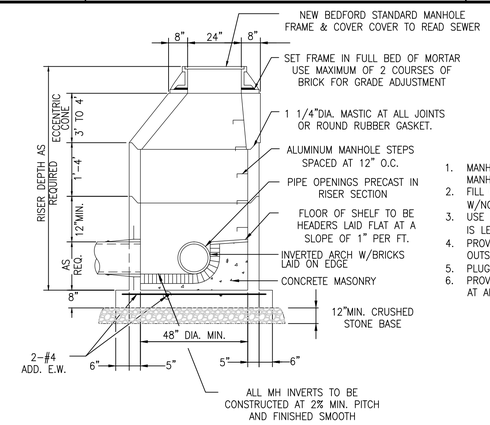

TYPICAL PRECAST SEWER MANHOLE

NOT TO SCALE

NOTES:

1. MANHOLE DESIGN TO CONFORM TO PRECAST CONCRETE MANHOLE SECTIONS – ASTM C478 LATEST REVISION.
2. FILL OUTSIDE FACE OF ALL MANHOLE JOINTS W/NON-SHRINK MORTAR.
3. USE FLAT TOP SLAB WHEN HEIGHT OF CONE SECTION IS LESS THAN 8'-0".
4. PROVIDE PIPE JOINTS NO MORE THAN 3'-0" FROM OUTSIDE FACE.
5. PLUG LIFT HOLES SOLID W/MASTIC.
6. PROVIDE FLEXIBLE SLEEVE AND STAINLESS STEEL STRAP AT ALL PIPE TO MANHOLE JOINTS.

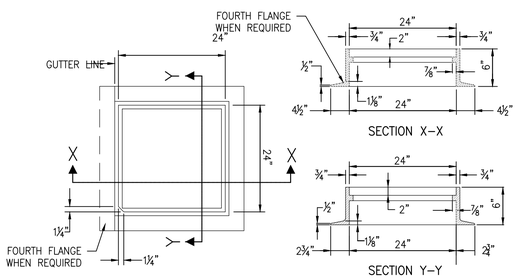

NOTES:

1. FRAME & COVER WEIGHT : 400 LBS +/- MATERIAL – CAST IRON
2. TO BE USED WITH SQUARE OPENING TYPE GRATE LeBARON MODEL# LF-246 OR APPROVED EQUAL

CATCH BASIN FRAME

NOT TO SCALE

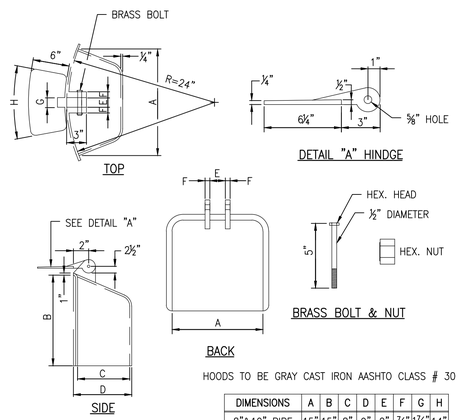

HOODS TO BE GRAY CAST IRON AASHTO CLASS # 30

DIMENSIONS	A	B	C	D	E	F	G	H
8"&10" PIPE	15"	15"	8"	9"	2"	7/8"	1 7/8"	14"
12"&15" PIPE	18"	18"	11 3/4"	18"	2"	1"	1 7/8"	14"

CATCH BASIN HOOD

NOT TO SCALE

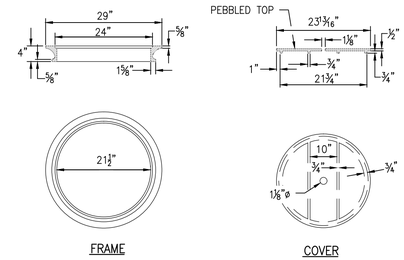

NOTES:

1. MINIMUM COVER WEIGHT – 73 lbs
2. MINIMUM FRAME WEIGHT – 113 lbs
3. MATERIAL – CAST IRON
4. SIDEWALK AREA USE ONLY

FRAME & COVER FOR CATCH BASINS (MUNICIPAL STANDARD)

NOT TO SCALE

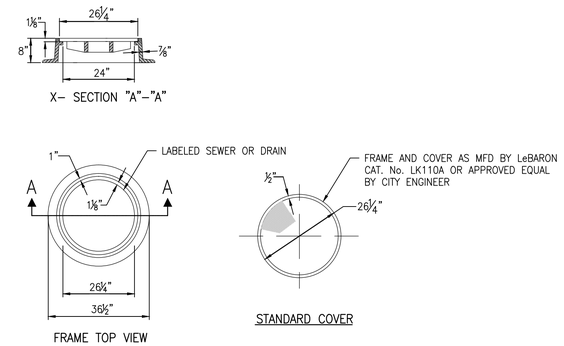

TYPE – A FRAME & COVER

NOTES:

1. FRAME & COVER WEIGHT – 475 LBS
2. MATERIAL – CAST IRON
3. LeBARON LK 110A OR APPROVED EQUAL BY CITY ENGINEER

MANHOLE FRAME AND COVER

NOT TO SCALE

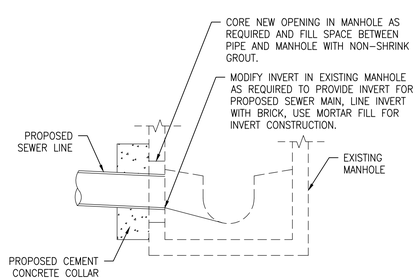

SEWER LINE CONNECTION TO EXISTING MANHOLE DETAIL

NOT TO SCALE

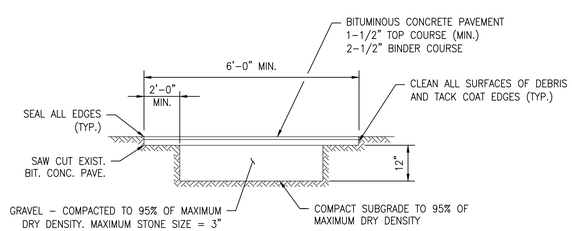

NOTE:
MUST MATCH INTO EXISTING PAVEMENT IF LARGER THAN 4" MIN.

TYPICAL BITUMINOUS CONCRETE PAVEMENT RESTORATION DETAIL

NOT TO SCALE

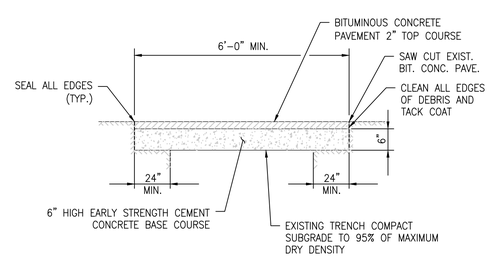

NOTE:
SPECIAL PAVEMENT RESTORATION DETAIL TO BE USED AS DIRECTED BY THE DPI COMMISSIONER IN AREAS THAT FLOWABLE FILL CAN NOT BE USED

SPECIAL BITUMINOUS CONCRETE PAVEMENT RESTORATION DETAIL

NOT TO SCALE

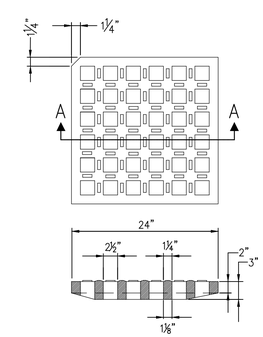

NOTES:

1. MINIMUM GRATE WEIGHT – 220± lbs
2. MATERIAL – CAST IRON
3. TO BE USED WITH STANDARD CATCH BASIN FRAME LeBARON MOD# LF-246 OR CITY APPROVED EQUAL

" SQUARE OPENING TYPE " CATCH BASIN GRATE

NOT TO SCALE

COMMONWEALTH OF MASSACHUSETTS JAMES A. JACKSON, JR. CIVIL No. 42563 CERTIFIED PROFESSIONAL ENGINEER

APEX

ROCKVILLE, MD
SOUTH WINDSOR, CT - BOSTON, MA - NEW BEDFORD, MA - HOLYOKE, MA

184 HIGH STREET, SUITE 502
BOSTON, MA 02210

58H CONNECTICUT AVENUE
SOUTH WINDSOR, CT

This drawings prepared by Apex for this project are instruments of Apex's service for use solely with respect to this project, and Apex shall be deemed the author of the Drawing and shall retain all common law, statutory and other reserved rights with respect thereto, including the copyright. The Documents shall not be used on other projects, for additions to this project or for completion of this project by others, except by agreement in writing and with appropriate compensation to Apex.

Maguire Group Inc.
Architects / Engineers / Planners
225 Chapman Street, 4th Floor
Providence,Rhode Island 02905
401-272-6000
www.maguiregroup.com

PROJECT
NEW BEDFORD MARINE COMMERCE TERMINAL

OWNER
MASSACHUSETTS CLEAN ENERGY CENTER
55 SUMMER STREET, 9TH FLOOR
BOSTON, MASSACHUSETTS

NO.	DATE	DESCRIPTION	BY
1	4/01/13	FOR CONSTRUCTION	JAJ

PROJECT NO.	6690
CADD FILE	
DESIGNED BY	JTS
DRAWN BY	JTS
CHECKED BY	JAJ
DATE	4/01/13
DRAWING SCALE	1"=50'

GRAPHIC SCALE
AS SHOWN

SHEET TITLE
UTILITY DETAILS 1

DRAWING NO.
D-1

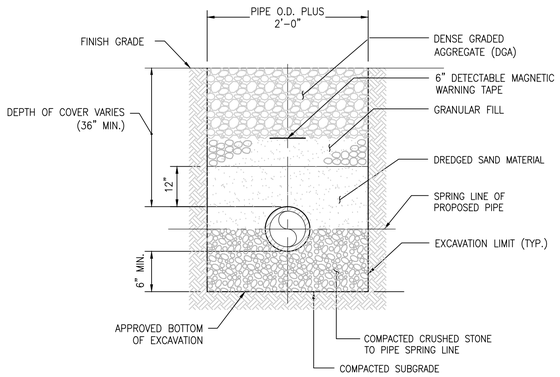

DRAIN & SEWER PIPE TRENCH DETAIL

NOT TO SCALE

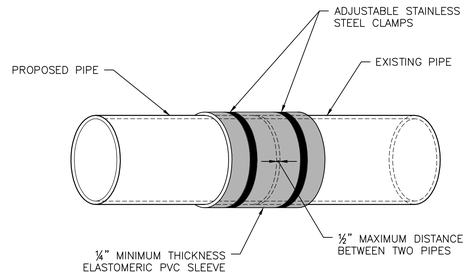

NOTE:

1. USE WHERE NEW PIPE MEETS EXISTING PIPE OR AS NEEDED.
2. PROPOSED PIPE MAY HAVE AN OUTSIDE DIAMETER (O.D.) THAT IS DIFFERENT THAN THE O.D. OF THE EXISTING PIPE. THE CONTRACTOR SHALL VERIFY THE O.D. PRIOR TO ORDERING THE COUPLING.

FLEXIBLE PIPE COUPLING DETAIL

NOT TO SCALE

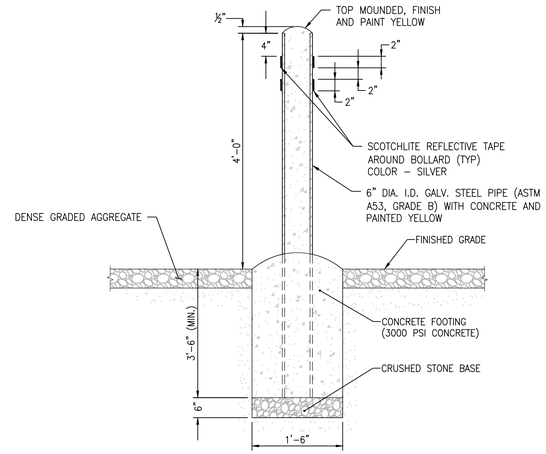

STEEL BOLLARD DETAIL

NOT TO SCALE

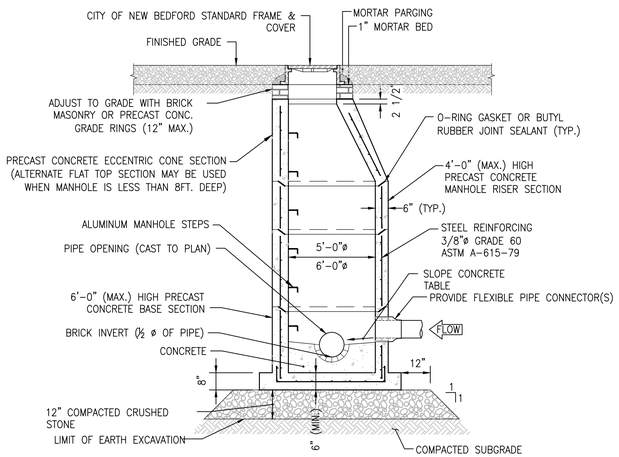

NOTE:

PRECAST MANHOLE TO MEET ASTM C-478 SPECIFICATIONS

PRECAST 5' AND 6' DIAMETER DRAIN MANHOLE DETAIL

NOT TO SCALE

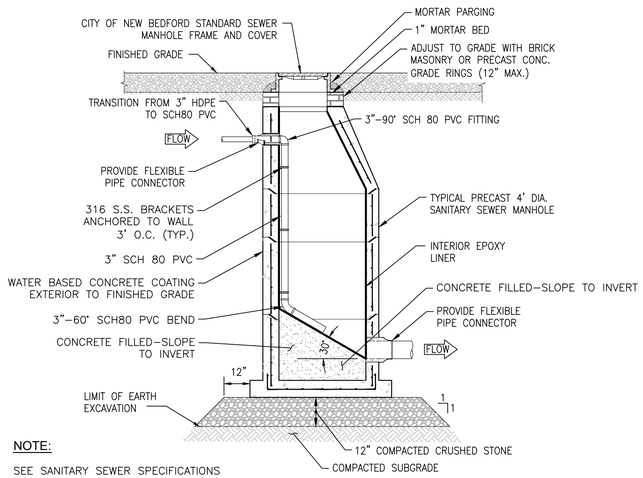

NOTE:

SEE SANITARY SEWER SPECIFICATIONS

PRECAST SPECIAL SANITARY MANHOLE DETAIL

NOT TO SCALE

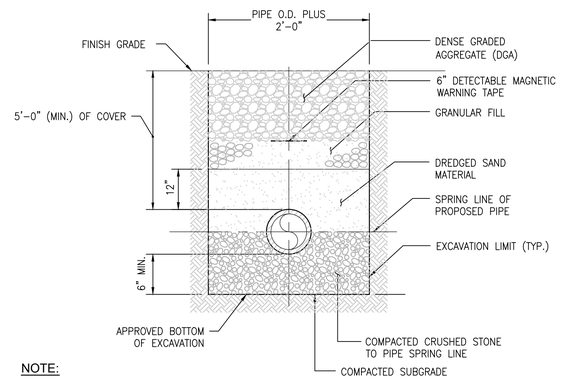

NOTE:

1. ALL UNDERGROUND WATER SERVICE PIPES SHALL HAVE A MINIMUM OF 5' OF COVER. PIPES WITH LESS THAN 5' OF COVER, INCLUDING PIPES IN THE UTILITY TRENCH, SHALL HAVE A 1" (MIN.) OF PIPE INSULATION WITH A HEATING TRACING WIRE PRE-INSTALLED BY THE PIPE MANUFACTURER. (SEE SPECIFICATIONS)

UNDERGROUND WATER SERVICE PIPE TRENCH DETAIL

NOT TO SCALE

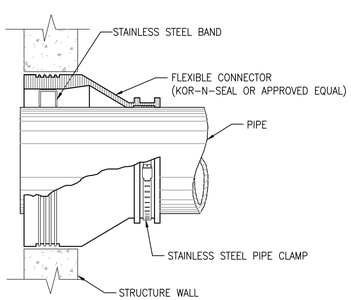

FLEXIBLE PIPE CONNECTOR DETAIL

NOT TO SCALE

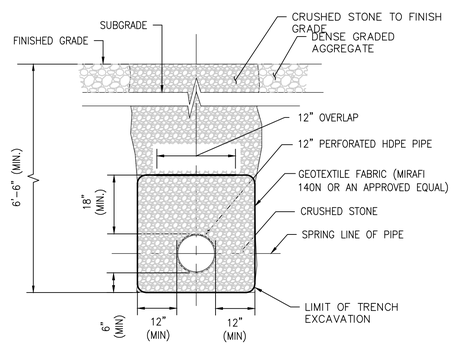

INFILTRATION TRENCH DETAIL

NOT TO SCALE

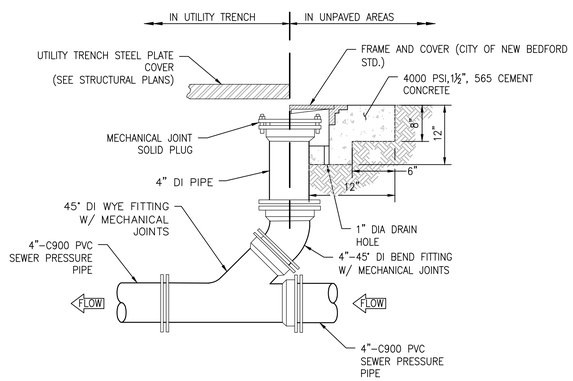

SANITARY SEWER CLEANOUT DETAIL

NOT TO SCALE

APEX

ROCKVILLE, MD
SOUTH WINDSOR, CT - BOSTON, MA -
NEW BEDFORD, MA - HOLYOKE, MA

184 HIGH STREET, SUITE 502
BOSTON, MA 02210

58H CONNECTICUT AVENUE
SOUTH WINDSOR, CT

This drawings prepared by Apex for this project are instruments of Apex's service for use solely with respect to this project, and Apex shall be deemed the author of the Drawing and shall retain all common law, statutory and other reserved rights with respect thereto, including the copyright. The Documents shall not be used on other projects, for additions to this project or for completion of this project by others, except by agreement in writing and with appropriate compensation to Apex.

Maguire Group Inc.
Architects / Engineers / Planners
225 Chapman Street, 4th Floor
Providence,Rhode Island 02905
401-272-6000
www.maguiregroup.com

PROJECT
NEW BEDFORD
MARINE COMMERCE
TERMINAL

OWNER
MASSACHUSETTS CLEAN ENERGY CENTER
55 SUMMER STREET, 9TH FLOOR
BOSTON, MASSACHUSETTS

NO.	DATE	DESCRIPTION	BY
1	4/01/13	FOR CONSTRUCTION	JAJ

PROJECT NO.	6690
CADD FILE	
DESIGNED BY	JTS
DRAWN BY	JTS
CHECKED BY	JAJ
DATE	4/01/13
DRAWING SCALE	1"=50'

GRAPHIC SCALE

AS SHOWN

SHEET TITLE

UTILITY
DETAILS 2

COMMONWEALTH OF MASSACHUSETTS
JAMES A. JACKSON, JR.
CIVIL
No. 42563
REGISTERED PROFESSIONAL ENGINEER

DRAWING NO.

D-2

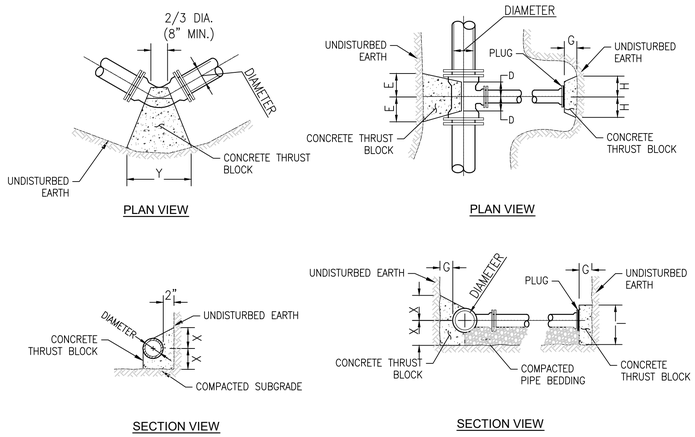

DIMENSIONS-HORIZONTAL BENDS

TYPE OF BEND	SIZE			
	3", 4"		6", 8"	
	X	Y	X	Y
11-1/4°	0'-6"	1'-0"	1'-0"	1'-3"
22-1/2°	0'-9"	1'-0"	1'-3"	2'-0"
45°	0'-9"	1'-9"	1'-6"	3'-3"
90°	1'-0"	2'-0"	2'-0"	4'-6"

DIMENSIONS-HORIZONTAL TEES & DEAD ENDS

SIZE OF BRANCH	D	E	F	G	H	I
3", 4"	8"	1'-0"	1'-0"	1'-0"	2'-0"	2'-0"
6", 8"	10"	2'-0"	1'-6"	1'-0"	4'-0"	3'-0"
10", 12"	1'-0"	3'-0"	2'-6"	1'-2"	6'-0"	5'-0"

HORIZONTAL THRUST BLOCK DETAILS

NOT TO SCALE

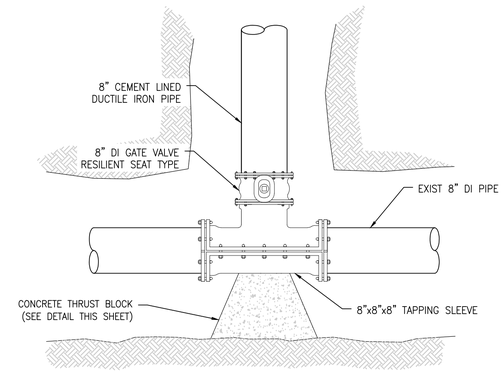

TAPPING SLEEVE AND GATE VALVE DETAIL

NOT TO SCALE

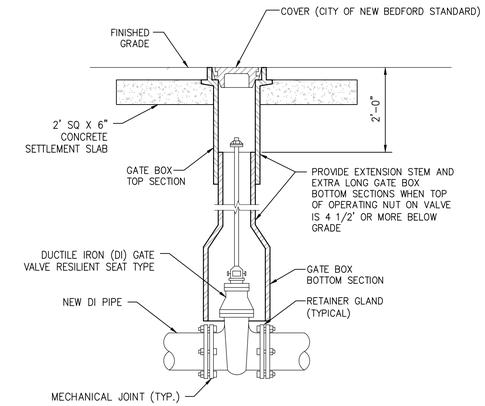

TYPICAL GATE VALVE AND VALVE BOX DETAIL

NOT TO SCALE

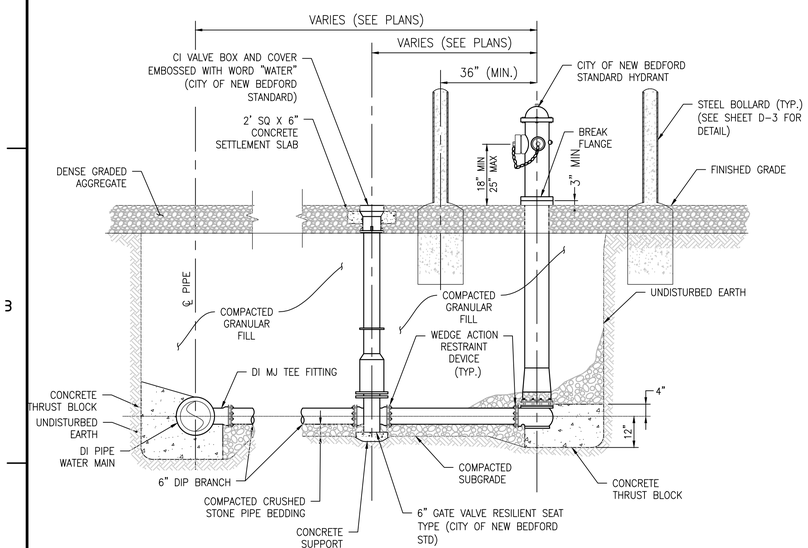

NOTE:

1. CONCRETE THRUST BLOCKS TO BE USED ONLY WHERE IT WILL BEAR ON UNDISTURBED EARTH. USE RESTRAINED JOINT FITTINGS (MEGALUG ORAPPROVED EQUAL) WHERE CONCRETE THRUST BLOCK IS UNACCEPTABLE. SIZE OF BLOCK OR MEGALUG TO BE DESIGNED.

FIRE HYDRANT DETAIL

NOT TO SCALE

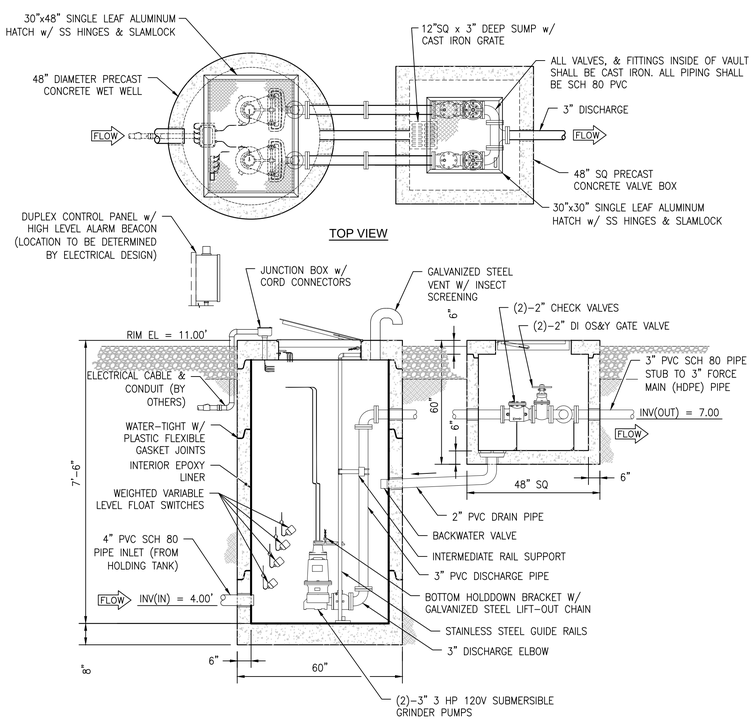

NOTES:

1. PRECAST CONCRETE: DESIGN STRENGTH OF 4500 PSI CONCRETE AT 28 DAYS. INSTALL NUMBER OF WETWELL RISER SECTIONS AS NEED TO MEET FINISH GRADE.
2. REINFORCEMENT: GRADE 60 STEEL REBAR CONFORMING TO ASTM A615 ON REQUIRED CENTERS OR EQUAL.
3. ALUMINUM HATCH: 300 PSF RATED, 1/4" ALUMINIUM SKID-RESISTANT FLOOR PLATE, STAINLESS STEEL TAMPERPROOF BOLTING & HINGES & SLAMLOCK.
4. PUMPS: PUMPS SHALL BE CENTRIFUGAL SOLIDS HANDLING TYPE WITH SUBMERSIBLE TYPE MOTOR. (SEE SPECIFICATIONS)
5. CONTROLS: PUMP CONTROLS SHALL BE MOUNTED INSIDE A UL LISTED NEMA-4X ENCLOSURE AND INCLUDE CIRCUIT BREAKERS, ALARM CIRCUIT FUSE, IEC RATED MOTOR STARTER, PUMP HOA, AND ALTERNATOR RELAY. PANEL SHALL HAVE A VISUAL ALARM BEACON. PANEL IS DESIGNED FOR REMOTE MOUNTING.

TYPICAL DUPLEX SANITARY SEWER PUMP STATION

NOT TO SCALE

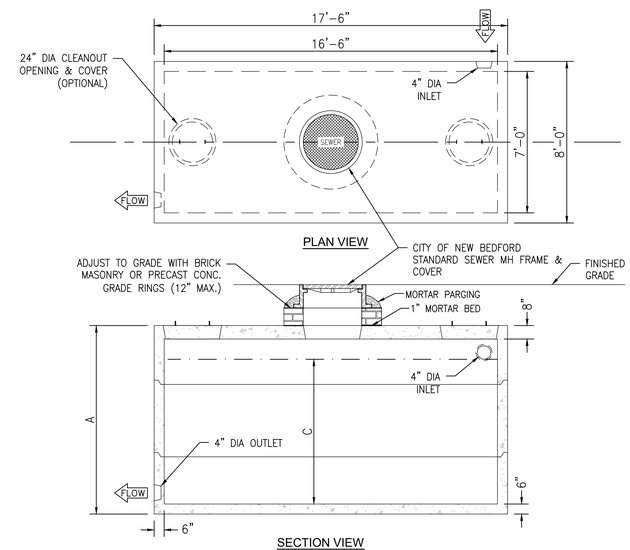

GALLONS	A (HEIGHT)	C (LIQUID)	WEIGHT (LBS)
2,500	63"	48'	40,770

NOTES:

1. CONCRETE: 5,000 PSI MINIMUM AFTER 28 DAYS.
2. REINFORCEMENT: STEEL REBAR CONFORMING TO ASTM C1227-93.
3. DESIGNED FOR H-20 LOADING
4. TONGUE AND GROOVE JOINT SEALED WITH BUTYL RESIN. INLET HEIGHT MAY INCREASE SLIGHTLY DUE TO THE BUTYL RESIN USED.
5. SEE UTILITY PLAN (SHEET U-1) FOR PIPE INVERTS.

COMMONWEALTH OF MASSACHUSETTS
JAMES A. JACKSON, JR.
CIVIL
No. 42563
REGISTERED PROFESSIONAL ENGINEER

PRECAST CONCRETE HOLDING TANK DETAIL

NOT TO SCALE

APEX

ROCKVILLE, MD
SOUTH WINDSOR, CT - BOSTON, MA - NEW BEDFORD, MA - HOLYOKE, MA

184 HIGH STREET, SUITE 502
BOSTON, MA 02210

58H CONNECTICUT AVENUE
SOUTH WINDSOR, CT

This drawings prepared by Apex for this project are instruments of Apex's service for use solely with respect to this project, and Apex shall be deemed the author of the Drawing and shall retain all common law, statutory and other reserved rights with respect thereto, including the copyright. The Documents shall not be used on other projects, for additions to this project or for completion of this project by others, except by agreement in writing and with appropriate compensation to Apex.

Maguire Group Inc.
Architects / Engineers / Planners
225 Chapman Street, 4th Floor
Providence,Rhode Island 02905
401-272-6000
www.maguiregroup.com

PROJECT
NEW BEDFORD MARINE COMMERCE TERMINAL

OWNER
MASSACHUSETTS CLEAN ENERGY CENTER
55 SUMMER STREET, 9TH FLOOR
BOSTON, MASSACHUSETTS

NO.	DATE	DESCRIPTION	BY
1	4/01/13	FOR CONSTRUCTION	JAJ

PROJECT NO.	6690
CADD FILE	
DESIGNED BY	JTS
DRAWN BY	JTS
CHECKED BY	JAJ
DATE	4/01/13
DRAWING SCALE	1"=50'

GRAPHIC SCALE

AS SHOWN

SHEET TITLE

UTILITY DETAILS 3

DRAWING NO.

D-3

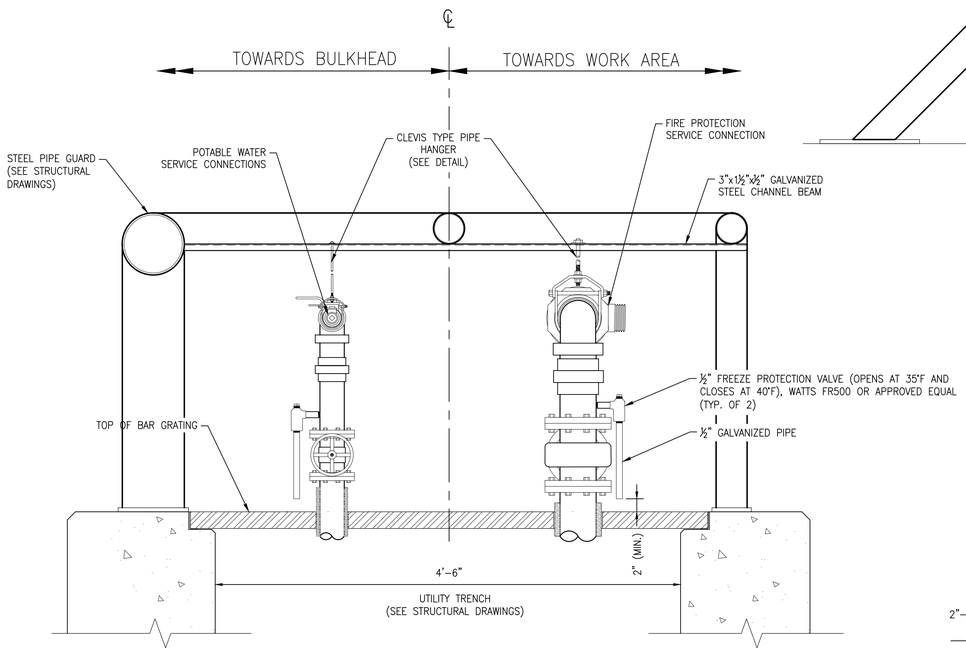

SIDE VIEW - LOOKING SOUTH

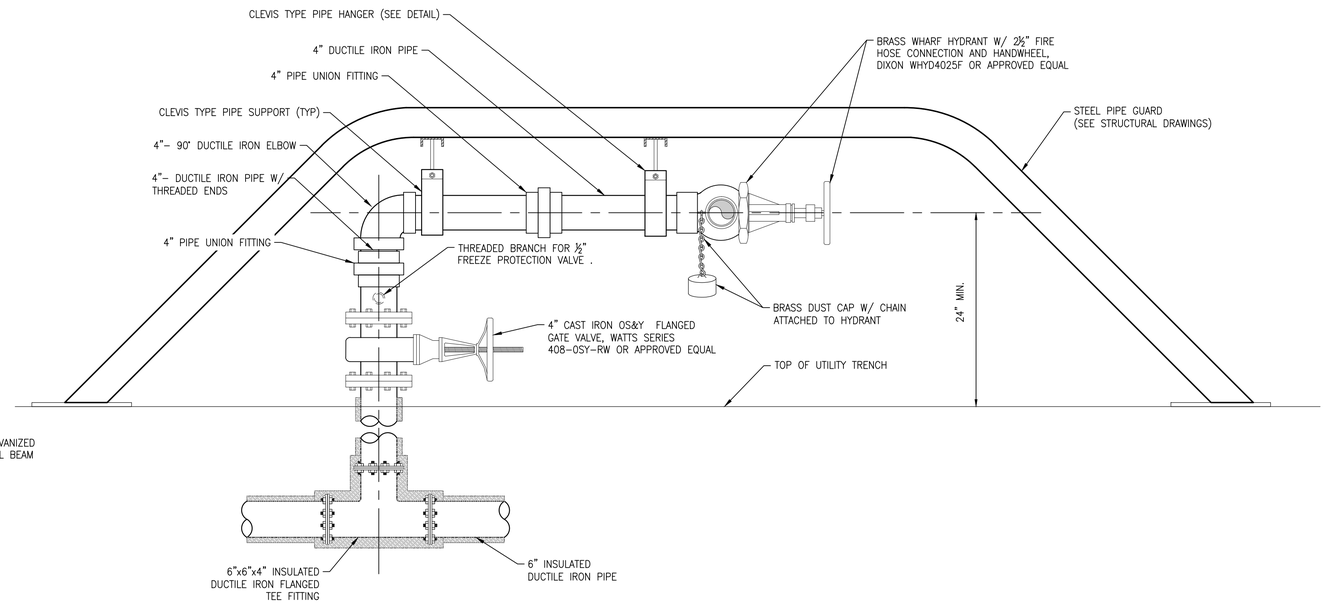

ELEVATION VIEW - LOOKING EAST

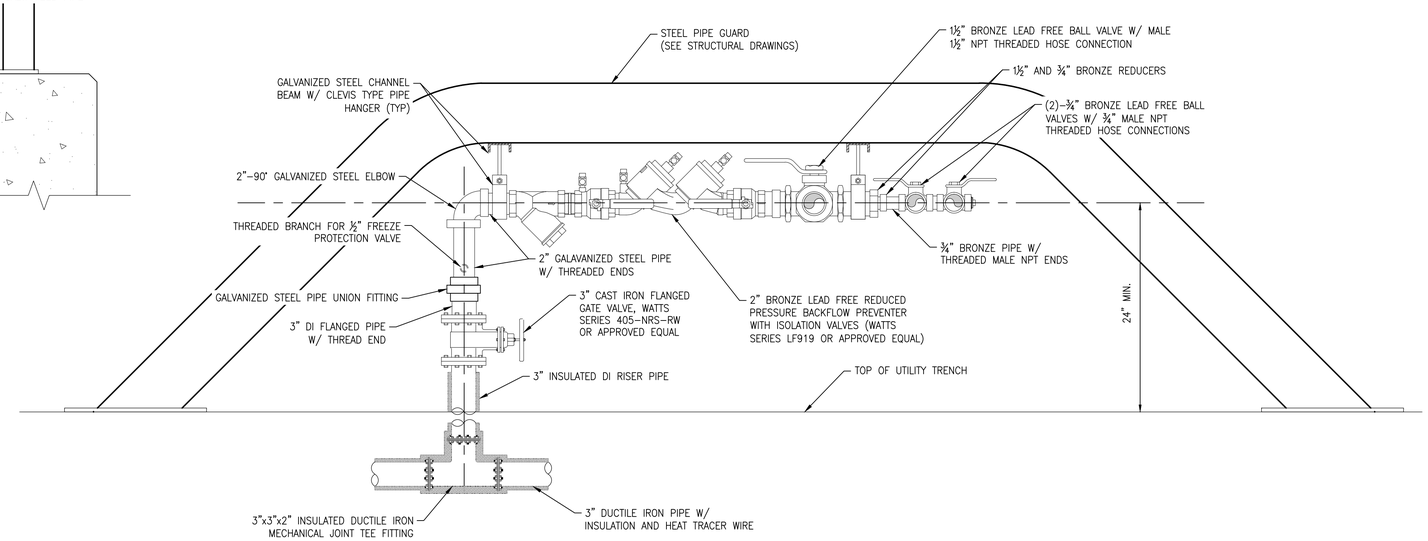

ELEVATION VIEW - LOOKING WEST

NOTES:

1. CONTRACTOR SHALL NOT FABRICATE ANY MATERIAL OR INSTALL ANY COMPONENTS PRIOR TO VERIFICATION OF CLEARANCES.
2. CONTRACTOR SHALL FIELD VERIFY ALL DIMENSIONS PRIOR TO BEGINNING WORK.
3. LOCATION OF PIPE SUPPORTS TO BE DETERMINED BY THE CONTRACTOR IN THE FIELD.
4. PRESSURE TEST ALL WATER AND SANITARY SEWER FOR A MINIMUM OF TWO HOURS WITH NO LOSS IN PRESSURE IN ACCORDANCE WITH THE LATEST EDITION OF THE INTERNATIONAL PLUMBING CODE.
5. SANITIZE ALL POTABLE WATER LINES IN ACCORDANCE WITH AWWA C651. PROVIDE DOCUMENTED LAB TEST RESULTS FROM A CERTIFIED LABORATORY.
6. STEEL PIPE GUARD TO BE PAINTED YELLOW.
7. ALL SHIP-TO-SHORE POTABLE WATER COMPONENTS TO BE PAINTED DARK BLUE.
8. ALL SHIP-TO-SHORE FIRE PROTECTION COMPONENTS TO BE PAINTED RED.

COMMONWEALTH OF MASSACHUSETTS
JAMES A. JACKSON, JR.
CIVIL
No. 42563
REGISTERED PROFESSIONAL ENGINEER

SHIP-TO-SHORE POTABLE WATER AND FIRE PROTECTION DETAILS

NOT TO SCALE

APEX

ROCKVILLE, MD
SOUTH WINDSOR, CT - BOSTON, MA - NEW BEDFORD, MA - HOLYOKE, MA

184 HIGH STREET, SUITE 502
BOSTON, MA 02210

58H CONNECTICUT AVENUE
SOUTH WINDSOR, CT

This drawings prepared by Apex for this project are instruments of Apex's service for use solely with respect to this project, and Apex shall be deemed the author of the Drawing and shall retain all common law, statutory and other reserved rights with respect thereto, including the copyright. The Documents shall not be used on other projects, for additions to this project or for completion of this project by others, except by agreement in writing and with appropriate compensation to Apex.

Maguire Group Inc.
Architects / Engineers / Planners
225 Chapman Street, 4th Floor
Providence,Rhode Island 02905
401-272-6000
www.maguiregroup.com

PROJECT
NEW BEDFORD MARINE COMMERCE TERMINAL

OWNER
MASSACHUSETTS CLEAN ENERGY CENTER
55 SUMMER STREET, 9TH FLOOR
BOSTON, MASSACHUSETTS

NO.	DATE	DESCRIPTION	BY
1	4/01/13	FOR CONSTRUCTION	JAJ

PROJECT NO.	6690
CADD FILE	
DESIGNED BY	JTS
DRAWN BY	JTS
CHECKED BY	JAJ
DATE	4/01/13
DRAWING SCALE	1"=50'

GRAPHIC SCALE

AS SHOWN

SHEET TITLE

UTILITY DETAILS 4

DRAWING NO.

D-4

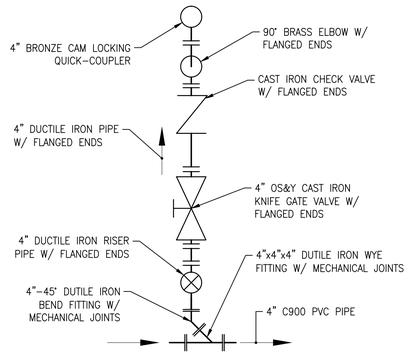

SANITARY SEWER

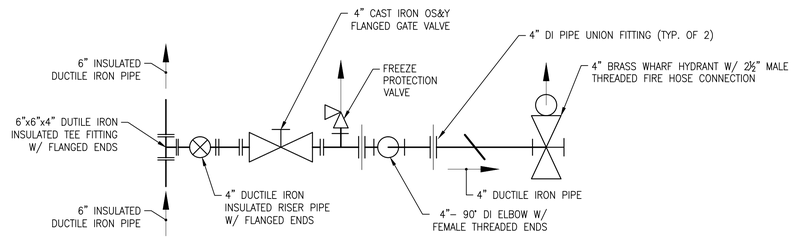

FIRE PROTECTION

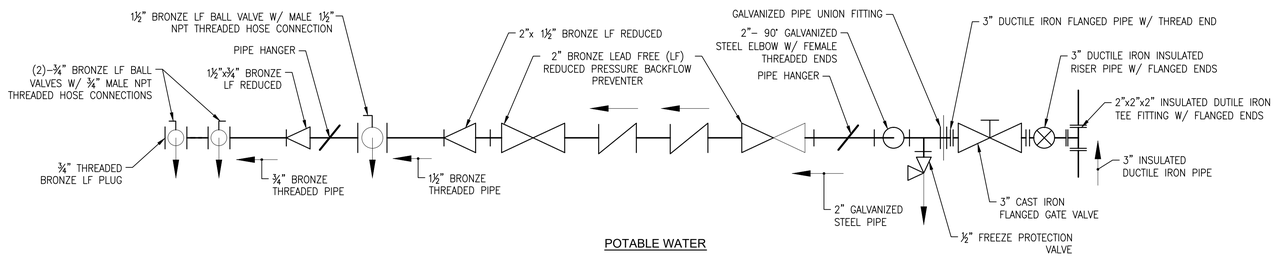

POTABLE WATER

SHIP-TO-SHORE PIPING DIAGRAMS

NOT TO SCALE

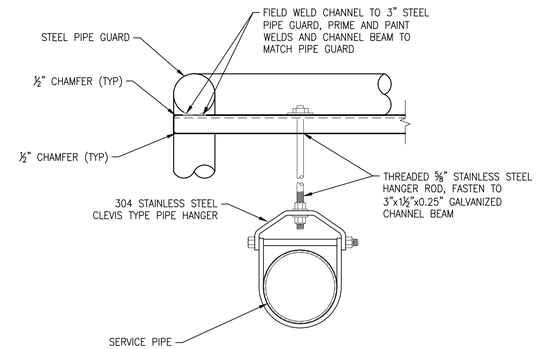

PIPE SUPPORT DETAIL

NOT TO SCALE

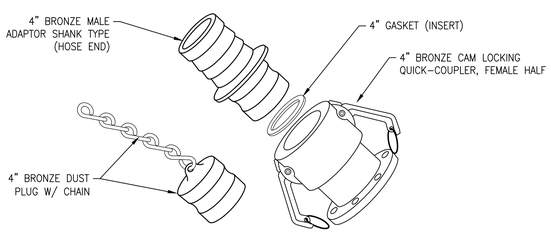

SHIP-TO-SHORE SEWAGE HOSE CONNECTION

NOT TO SCALE

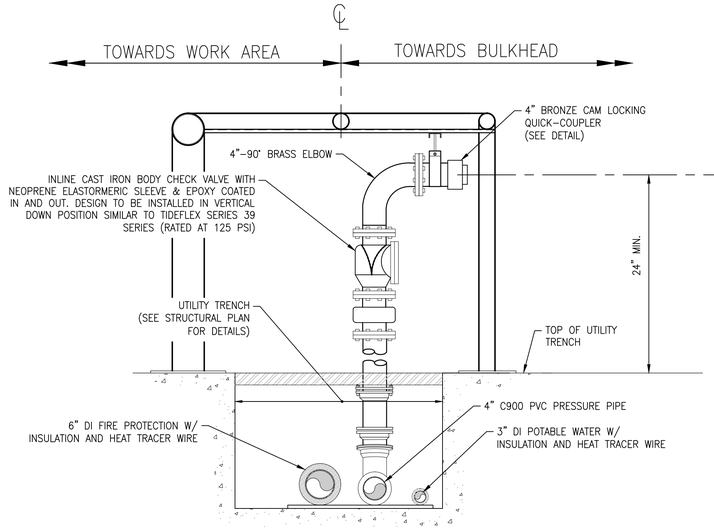

SIDE VIEW-LOOKING NORTH

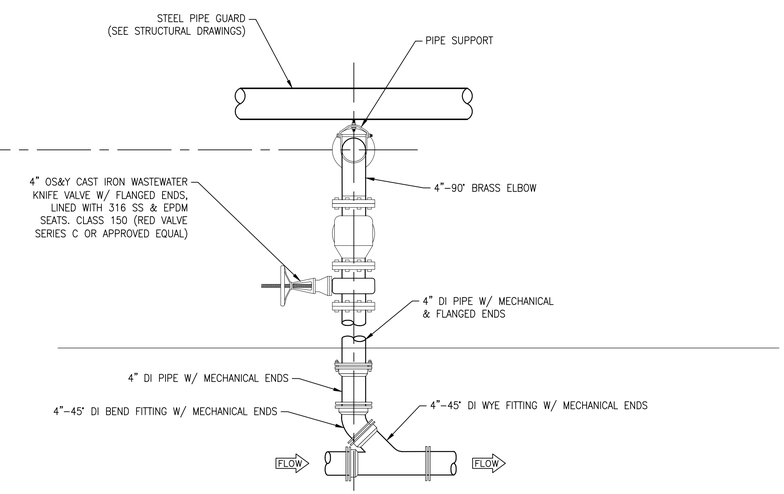

ELEVATION VIEW

NOTES:

1. CONTRACTOR SHALL NOT FABRICATE ANY MATERIAL OR INSTALL ANY EQUIPMENT PRIOR TO VERIFICATION OF CLEARANCES.
2. CONTRACTOR SHALL FIELD VERIFY ALL DIMENSIONS PRIOR TO BEGINNING WORK.
3. LOCATION OF PIPE SUPPORTS TO BE DETERMINED BY THE CONTRACTOR IN THE FIELD.
4. ALL SHIP-TO-SHORE SANITARY SEWER COMPONENTS TO BE PAINTED GOLD.

SHIP-TO-SHORE SANITARY SEWAGE DETAIL

NOT TO SCALE

APEX

ROCKVILLE, MD
SOUTH WINDSOR, CT - BOSTON, MA - NEW BEDFORD, MA - HOLYOKE, MA

184 HIGH STREET, SUITE 502
BOSTON, MA 02210

58H CONNECTICUT AVENUE
SOUTH WINDSOR, CT

This drawings prepared by Apex for this project are instruments of Apex's service for use solely with respect to this project, and Apex shall be deemed the author of the Drawing and shall retain all common law, statutory and other reserved rights with respect thereto, including the copyright. The Documents shall not be used on other projects, for additions to this project or for completion of this project by others, except by agreement in writing and with appropriate compensation to Apex.

Maguire Group Inc.
Architects / Engineers / Planners
225 Chapman Street, 4th Floor
Providence,Rhode Island 02905
401-272-6000
www.maguiregroup.com

PROJECT
NEW BEDFORD MARINE COMMERCE TERMINAL

OWNER
MASSACHUSETTS CLEAN ENERGY CENTER
55 SUMMER STREET, 9TH FLOOR
BOSTON, MASSACHUSETTS

NO.	DATE	DESCRIPTION	BY
1	4/01/13	FOR CONSTRUCTION	JAJ

PROJECT NO.	6690
CADD FILE	
DESIGNED BY	JTS
DRAWN BY	JTS
CHECKED BY	JAJ
DATE	4/01/13
DRAWING SCALE	1"=50'

GRAPHIC SCALE

AS SHOWN

SHEET TITLE

UTILITY DETAILS 5

DRAWING NO.

D-5

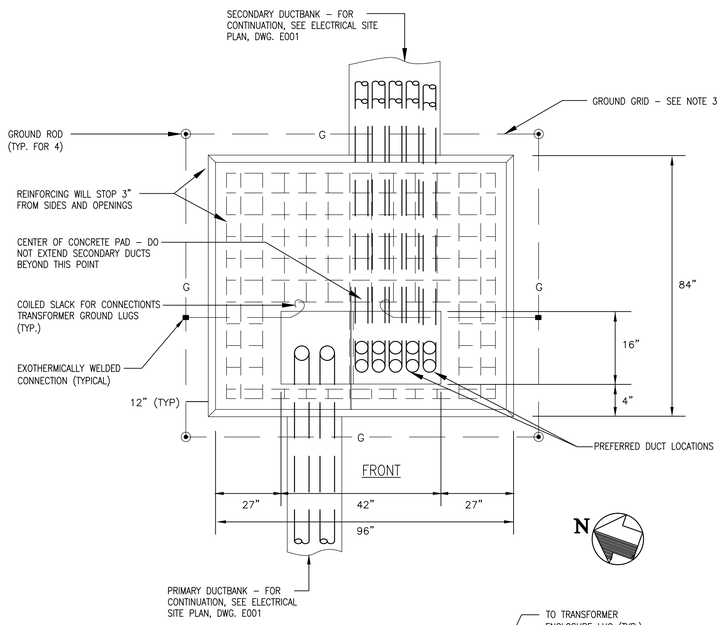

1 PADMOUNT TRANSFORMER DETAIL
NOT TO SCALE

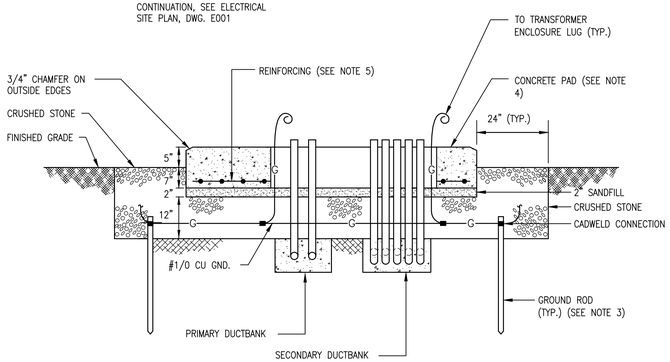

SECTION

TRANSFORMER PAD NOTES:

1. ALL WORK SHALL BE APPROVED BY THE OWNER'S REPRESENTATIVE
2. CONDUIT – INSTALL AS SHOWN BEFORE PAD IS POURED. USE 36" RADIUS RIGID STEEL BENDS, WITH COUPLINGS, NIPPLES AND GROUNDING TYPE BUSHINGS AS REQUIRED. TERMINATE AS SHOWN.
3. GROUND GRID – INSTALL AS SHOWN. INSTALL #1/0, 7–STRAND BARE COPPER WIRE LOOP 1'–0" BELOW GRADE. BOND ALL EXPOSED METALLIC CONDUITS AND LEAVE 3'–0" OF SLACK WIRE ABOVE PAD FOR GROUNDING TRANSFORMER AT (2) OPPOSITE POINTS IN THE CABLE CONDUIT OPENING. INSTALL COPPER CLAD STEEL 3/4"x10'–0" GROUND RODS.
4. CONCRETE PAD – PROVIDE CONCRETE AS SPECIFIED. ALL EXPOSED EDGES SHALL HAVE A 3/4" CHAMFER. PAD SHALL BE A MINIMUM OF 12" THICK EXACT SIZE OF PAD TO BE VERIFIED DIMENSIONS WITH TRANSFORMER BEING FURNISHED. PAD SHALL HAVE A SLIGHT SLOPE OF 1% (±0.5%) FROM CENTER TO OUTSIDE EDGES. CONCRETE SHALL BE 4000 PSI.
5. REINFORCING SHALL BE #4 GRADE 60 REBARS, 12" O.C. EACH WAY, CONFORMING TO THE LATEST STANDARDS OF ASTM STD. A–615. REINFORCING SHALL BE LOCATED AT THE BOTTOM OF THE SLAB, WITH A MINIMUM OF 3" CLEARANCE FROM THE FACE OF CONCRETE.

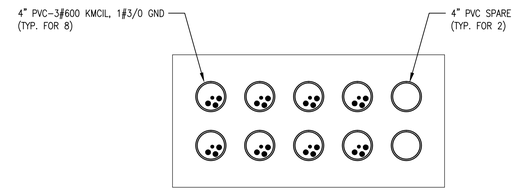

H SECONDARY DUCTBANK SECTION
NOT TO SCALE

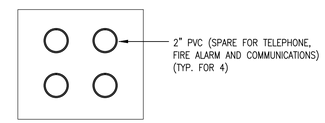

T DUCTBANK SECTION
NOT TO SCALE

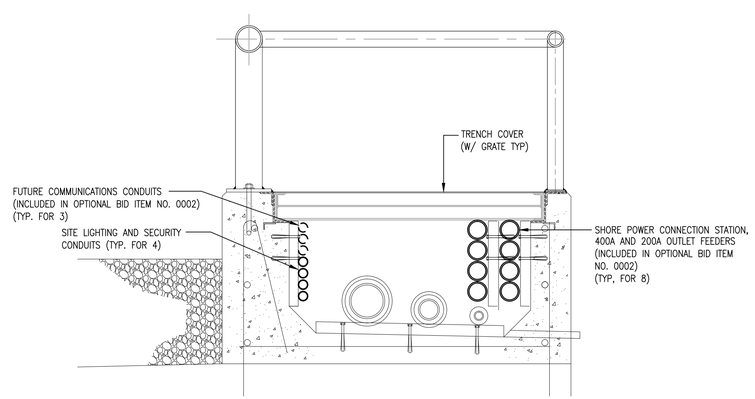

F UTILITY TRENCH SECTION
NOT TO SCALE

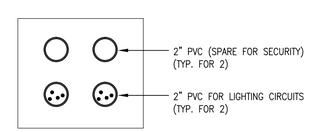

D DUCTBANK SECTION
NOT TO SCALE

SHEET NOTES:

1. FOR GENERAL NOTES, LEGEND AND ABBREVIATIONS, REFER TO DRAWING E001.
2. FOR ELECTRICAL SITE PLAN, REFER TO DWG. E001.

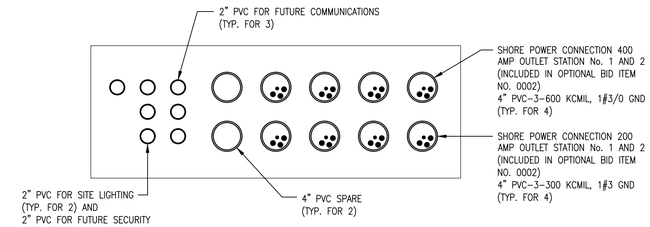

NOTE:
DUCTBANK TO BE CONSTRUCTED UNDER BASE BID. WIRING FOR SHORE POWER CONNECTION STATION INCLUDED IN OPTIONAL BID PACKAGE NO. 0010.

C DUCTBANK SECTION
NOT TO SCALE

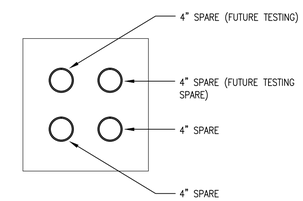

B DUCTBANK SECTION
NOT TO SCALE

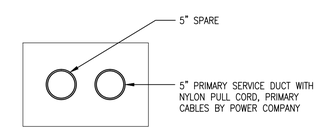

A DUCTBANK SECTION
NOT TO SCALE

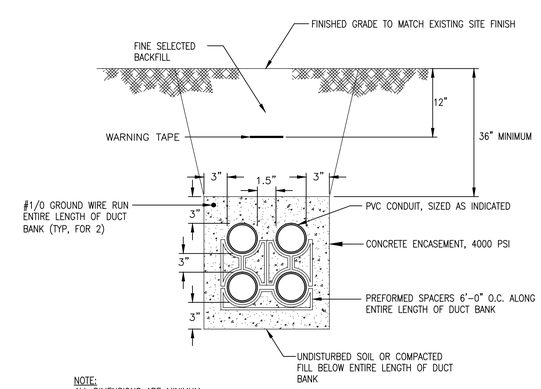

NOTE:
ALL DIMENSIONS ARE MINIMUM REQUIREMENTS.

TYPICAL DUCTBANK SECTION
NOT TO SCALE

APEX

ROCKVILLE, MD
SOUTH WINDSOR, CT - BOSTON, MA - NEW BEDFORD, MA - HOLYOKE, MA

184 HIGH STREET, SUITE 502
BOSTON, MA 02210

58H CONNECTICUT AVENUE
SOUTH WINDSOR, CT

This drawings prepared by Apex for this project are instruments of Apex's service for use solely with respect to this project, and Apex shall be deemed the author of the Drawing and shall retain all common law, statutory and other reserved rights with respect thereto, including the copyright. The Documents shall not be used on other projects, for additions to this project or for completion of this project by others, except by agreement in writing and with appropriate compensation to Apex.

Maguire Group Inc.
Architects / Engineers / Planners
225 Chapman Street, 4th Floor
Providence,Rhode Island 02905
401–272–6000
www.maguiregroup.com

PROJECT
NEW BEDFORD MARINE COMMERCE TERMINAL

OWNER
MASSACHUSETTS CLEAN ENERGY CENTER
55 SUMMER STREET, 9TH FLOOR
BOSTON, MASSACHUSETTS

NO.	DATE	DESCRIPTION	BY
1	4/01/13	FOR CONSTRUCTION	JAJ

PROJECT NO.	6690
CADD FILE	
DESIGNED BY	DNL
DRAWN BY	RAB
CHECKED BY	JAJ
DATE	6/19/12
DRAWING SCALE	NONE

GRAPHIC SCALE

SHEET TITLE

ELECTRICAL DETAILS

DRAWING NO.

D-6

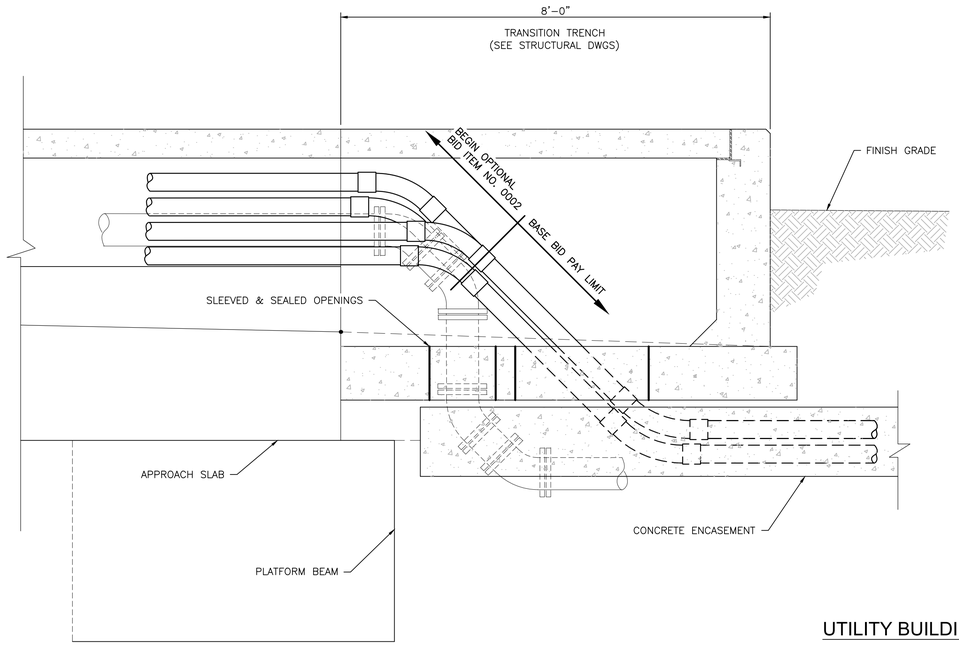

G SECTION AT UTILITY TRENCH

SCALE: 3/4" = 1'-0"

UTILITY BUILDING NOTES:

1. ALL WORK SHALL BE APPROVED BY THE OWNER'S REPRESENTATIVE
2. CONTRACTOR TO COORDINATE CONDUIT LOCATIONS TO ACCOMMODATE ELECTRICAL EQUIPMENT AND BUILDING BEING FURNISHED.
3. CONDUIT – INSTALL BEFORE SLAB IS POURED. USE 36" RADIUS RIGID STEEL BENDS, WITH COUPLINGS, NIPPLES AND GROUNDING TYPE BUSHINGS AS REQUIRED.
4. GROUND GRID – INSTALL AS SHOWN. INSTALL #1/0, 7-STRAND BARE COPPER WIRE LOOP 1'-0" BELOW GRADE. BOND ALL EXPOSED METALLIC CONDUITS AND LEAVE 3'-0" OF SLACK WIRE ABOVE PAD. INSTALL COPPER CLAD STEEL 3/4"x10'-0" GROUND RODS.
5. CONCRETE SLAB – SHALL BE 4000 PSI (MIN.) CONCRETE OR AS SPECIFIED BY THE BUILDING, MANUFACTURER. ALL EXPOSED EDGES SHALL HAVE A 3/4" CHAMFER. SLAB DIMENSIONS SHALL BE APPROXIAMTELY 12'-0" X 20'-0" WITH A MINIMUM THICKNESS OF 12". EXACT SIZE & THICKNESS OF SLAB SHALL BE VERIFIED ACCORDING TO THE BUIDING MANUFACTUER'S RECOMMENDATIONS.
6. REINFORCING SHALL BE #4 GRADE 60 REBARS, 12" O.C. EACH WAY, CONFORMING TO THE LATEST STANDARDS OF ASTM STD. A-615. REINFORCING SHALL BE LOCATED AT THE BOTTOM OF THE SLAB, WITH A MINIMUM OF 3" CLEARANCE FROM THE FACE OF CONCRETE.

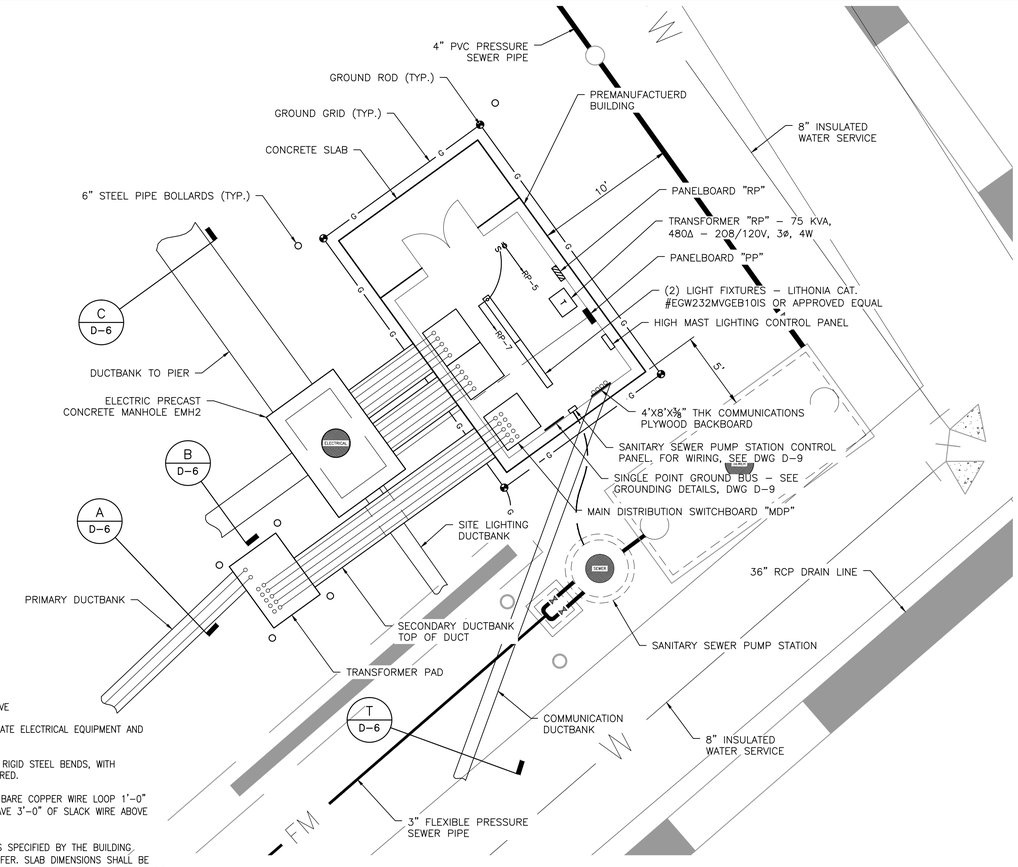

ELECTRICAL UTILITY BUILDING PLAN

SCALE: 1" = 5'-0"

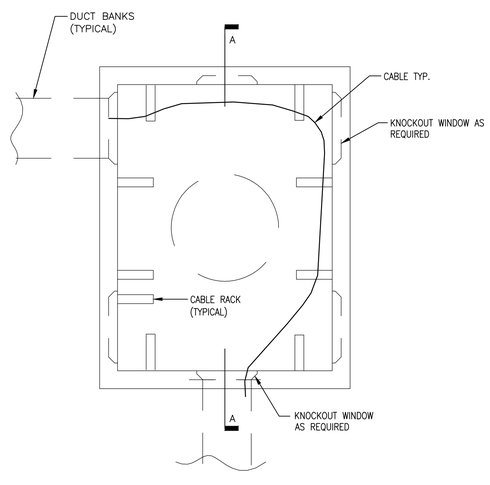

INTERIOR PLAN VIEW

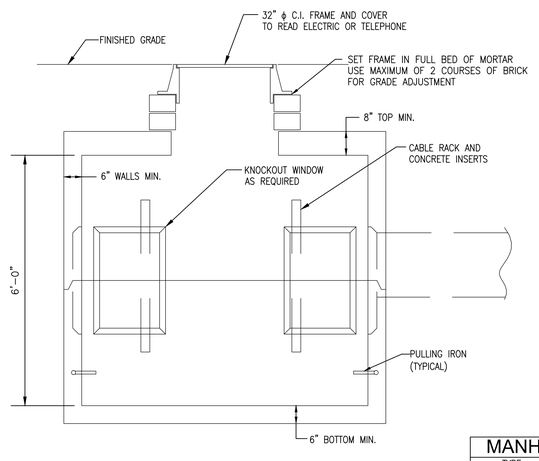

SIDE SECTION A–A

TYPICAL MANHOLE DETAIL - STANDARD TYPE

NOT TO SCALE

MANHOLE SCHEDULE	
TYPE	INTERIOR DIMENSIONS
EMH1	6' x 8' x 7' HGT
EMH2/EMH3/TMH1	4' x 6' x 6' HGT
HH	4' x 4' x 4' HGT

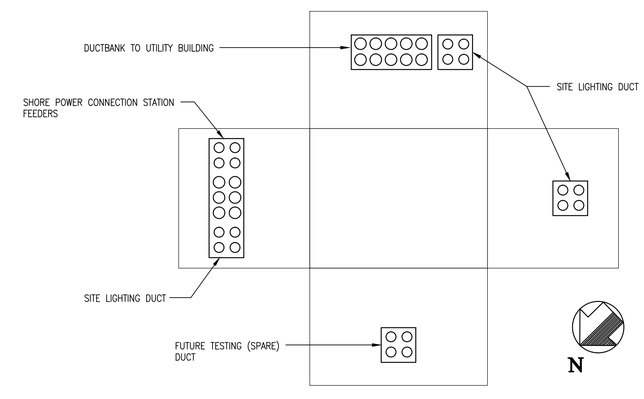

EMH2 EXPLODED MANHOLE DETAIL

NOT TO SCALE

SHEET NOTES:

1. FOR GENERAL NOTES, LEGEND AND ABBREVIATIONS, REFER TO DRAWING E001.
2. FOR ELECTRICAL SITE PLAN, REFER TO DWG. E001.
3. FOR SITE UTILITIES, REFER TO DWG U-1.
4. FOR ELECTRICAL BUILDING DIMENSIONS AND DESCRIPTION, SEE SPECIFICATION 130120.
5. SEE SHEET D-1 FOR TYPICAL PRECAST MANHOLE REQUIREMENTS.

APEX

ROCKVILLE, MD
SOUTH WINDSOR, CT - BOSTON, MA - NEW BEDFORD, MA - HOLYOKE, MA

184 HIGH STREET, SUITE 502
BOSTON, MA 02210

58H CONNECTICUT AVENUE
SOUTH WINDSOR, CT

This drawings prepared by Apex for this project are instruments of Apex's service for use solely with respect to this project, and Apex shall be deemed the author of the Drawing and shall retain all common law, statutory and other reserved rights with respect thereto, including the copyright. The Documents shall not be used on other projects, for additions to this project or for completion of this project by others, except by agreement in writing and with appropriate compensation to Apex.

Maguire Group Inc.
Architects / Engineers / Planners
225 Chapman Street, 4th Floor
Providence,Rhode Island 02905
401-272-6000
www.maguiregroup.com

PROJECT
NEW BEDFORD MARINE COMMERCE TERMINAL

OWNER
MASSACHUSETTS CLEAN ENERGY CENTER
55 SUMMER STREET, 9TH FLOOR
BOSTON, MASSACHUSETTS

NO.	DATE	DESCRIPTION	BY
1	4/01/13	FOR CONSTRUCTION	JAJ

PROJECT NO.	6690
CADD FILE	
DESIGNED BY	DNL
DRAWN BY	RAB
CHECKED BY	JAJ
DATE	4/01/13
DRAWING SCALE	NONE
GRAPHIC SCALE	

SHEET TITLE

UTILITY BUILDING PLAN AND DETAILS

DRAWING NO.

D-7

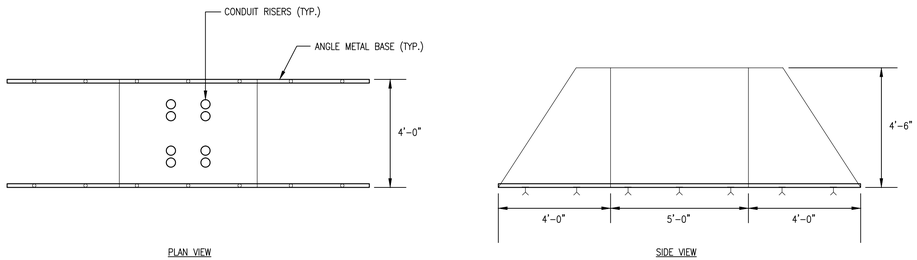

NOTE:
EXACT DIMENSIONS SHALL BE DETERMINED BY THE APPROVED SHORE POWER STATION MANUFACTURER.

SHORE POWER STATION DIMENSION DETAIL

(INCLUDED IN OPTIONAL BID ITEM NO. 0002)

NTS

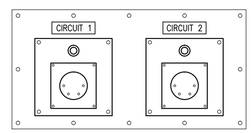

TYPICAL
ENLARGED VIEW PANEL
MOUNTED CONNECTOR

NOTE:
FOR ADDITIONAL INFORMATION, REFER TO SPECIFICATION SECTION 260533 "SHORE POWER CONNECTION STATION"

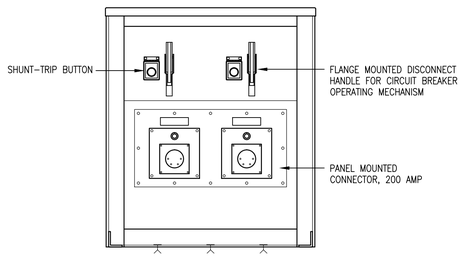

NORTH SIDE

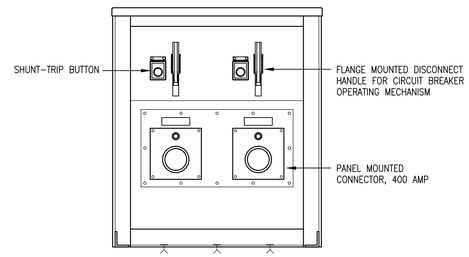

SOUTH SIDE

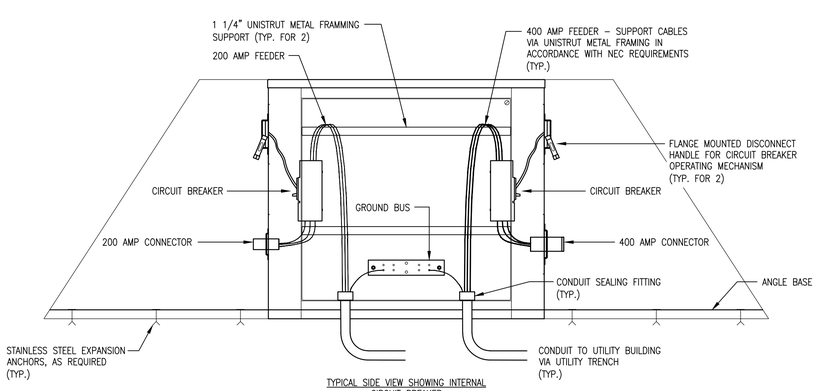

TYPICAL SIDE VIEW SHOWING INTERNAL
CIRCUIT BREAKER

SHORE POWER CONNECTION DETAIL

(INCLUDED IN OPTIONAL BID ITEM NO. 0002)

NTS

SHEET NOTES:

1. FOR GENERAL NOTES, LEGEND AND ABBREVIATIONS, REFER TO DRAWING E001.
2. FOR ELECTRICAL SITE PLAN, REFER TO DWG. E001.

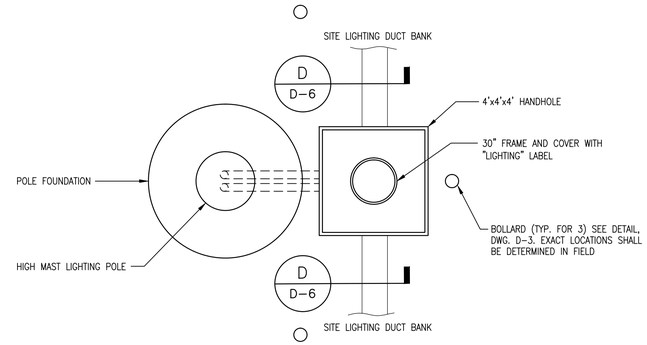

HIGH MAST LIGHTING POLE BASE DETAIL

NOT TO SCALE

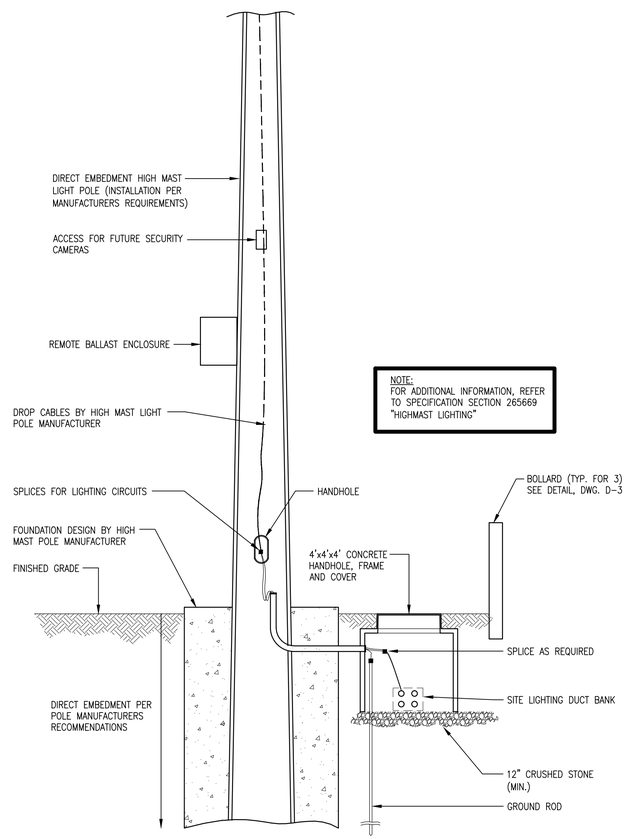

NOTE:
FOR ADDITIONAL INFORMATION, REFER TO SPECIFICATION SECTION 265669 "HIGHMAST LIGHTING"

TYPICAL HIGH MAST LIGHTING POLE INSTALLATION DETAIL

NOT TO SCALE

APEX

ROCKVILLE, MD
SOUTH WINDSOR, CT - BOSTON, MA - NEW BEDFORD, MA - HOLYOKE, MA

184 HIGH STREET, SUITE 502
BOSTON, MA 02210

58H CONNECTICUT AVENUE
SOUTH WINDSOR, CT

This drawings prepared by Apex for this project are instruments of Apex's service for use solely with respect to this project, and Apex shall be deemed the author of the Drawing and shall retain all common law, statutory and other reserved rights with respect thereto, including the copyright. The Documents shall not be used on other projects, for additions to this project or for completion of this project by others, except by agreement in writing and with appropriate compensation to Apex.

Maguire Group Inc.
Architects / Engineers / Planners
225 Chapman Street, 4th Floor
Providence,Rhode Island 02905
401-272-6000
www.maguiregroup.com

PROJECT
NEW BEDFORD MARINE COMMERCE TERMINAL

OWNER
MASSACHUSETTS CLEAN ENERGY CENTER
55 SUMMER STREET, 9TH FLOOR
BOSTON, MASSACHUSETTS

NO.	DATE	DESCRIPTION	BY
1	4/01/13	FOR CONSTRUCTION	JAJ

PROJECT NO.	6690
CADD FILE	
DESIGNED BY	DNL
DRAWN BY	RAB
CHECKED BY	JAJ
DATE	4/01/13
DRAWING SCALE	NONE

GRAPHIC SCALE

SHEET TITLE

ELECTRICAL DETAILS

DRAWING NO.

D-8

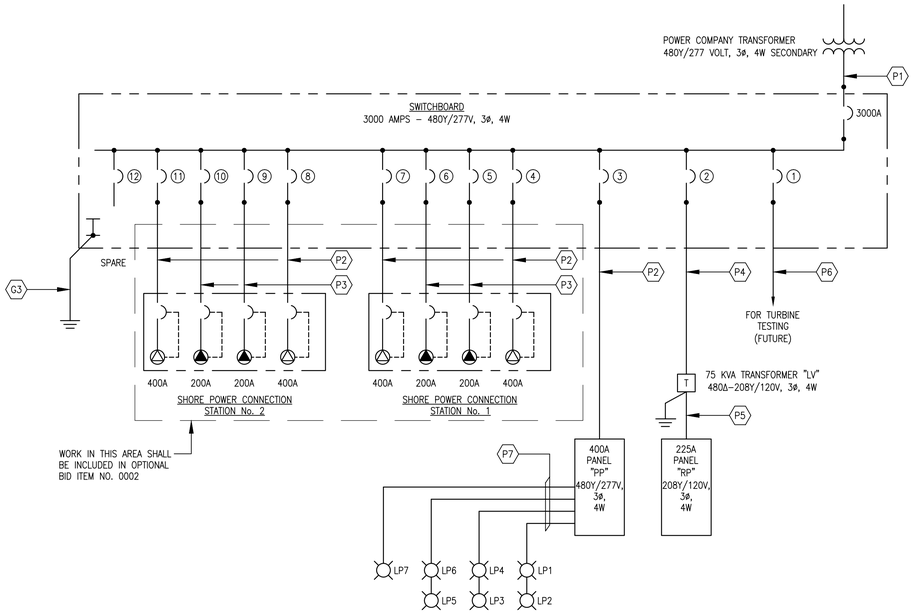

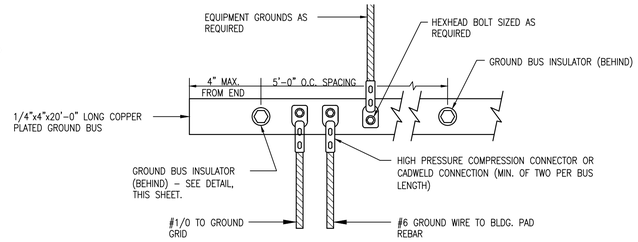

GROUND BUS CONNECTION DETAIL

NTS

SHEET NOTES:

1. FOR GENERAL NOTES, LEGEND AND ABBREVIATIONS, REFER TO DRAWING E001.
2. FOR ELECTRICAL SITE PLAN, REFER TO DWG. E001.

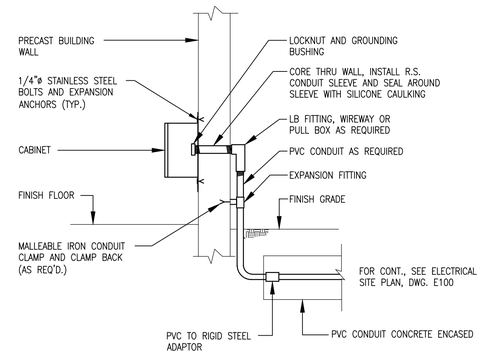

TYPICAL THRU WALL CONDUIT DETAIL

NTS

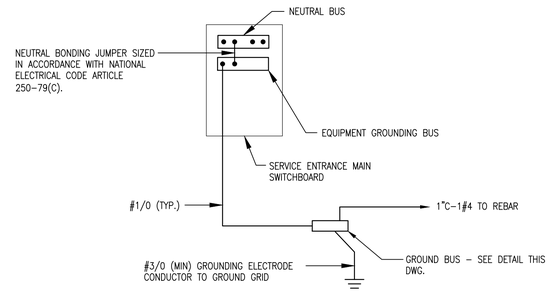

SYSTEM GROUNDING CONNECTIONS DETAIL

NTS

POWER WIRING SCHEDULE

- P1 (8) SETS OF 3–600 KCMIL, 1#1/0 N, 1#3/0 GND EACH IN 4"C
- P2 4"C–3–600 KCMIL, 1#3 GND
- P3 4"C–3#300 KCMIL, 1#3 GND
- P4 1 1/2"C–3#1, 1#6 GND
- P5 2"C–4#3/0, 1#6 GND
- P6 (2) 4"C–WITH PULLCORD (FOR FUTURE WIRING)
- P7 2"C–3#3, 1#8 GND

GROUNDING AND BONDING WIRING SCHEDULE

- G1 3/4"C–1#4 GND
- G2 3/4"C–1#8 GND
- G3 1"C–1#3/0 GND

ELECTRICAL DISTRIBUTION SYSTEM – SINGLE-LINE DIAGRAM

NO SCALE

PANEL: PP
LOCATION: ELECTRIC ROOM
VOLTS: 480Y/277V
PHASE: 3
WIRE: 4
SOLID NEUTRAL: YES
POLE PANEL: 30

MLO: 400 AMP
MAIN BRKR: 400 AMP
MAIN BUS: –
A.I.C. RATING: 65,000 @ 480V
MOUNTING: SURFACE

CIRCUIT DESCRIPTION	CKT BRKR NO	TRIP	POLE	AMPS	Ø	AMPS	CKT BRKR POLE	TRIP	NO	CIRCUIT DESCRIPTION
HI-MAST LTG-POLE #7	1	30	3	16.9	A	7.8	3	30	2	HI-MAST LTG-POLES #3, 4
	3	–	–	16.9	B	7.8	–	–	4	
	5	–	–	16.9	C	7.8	–	–	6	
HI-MAST LTG-POLES #1, 2	7	30	3	11.8	A	7.8	3	30	8	HI-MAST LTG-POLES #5, 6
	9	–	–	11.8	B	7.8	–	–	10	
	11	–	–	11.8	C	7.8	–	–	12	
SPARE	13	20	1	–	A	–	1	20	14	SPARE
SPARE	15	20	1	–	B	–	1	20	16	SPARE
SPARE	17	20	1	–	C	–	1	20	18	SPARE
SPACE	19	–	1	–	A	11.1	3	20	20	DUPLEX SEWER PUMP CTL PANEL
SPACE	21	–	1	–	B	11.1	–	–	22	
SPACE	23	–	1	–	C	11.1	–	–	24	
SPACE	25	–	1	–	A	–	3	30	26	SPARE
SPACE	27	–	1	–	B	–	–	–	28	
SPACE	29	–	1	–	C	–	–	–	30	
TOTALS (AMPERES)	**AØ**	55.4	**BØ**	55.4	**CØ**	55.4				

PANEL: RP
LOCATION: ELECTRIC ROOM
VOLTS: 120/208
PHASE: 3
WIRE: 4
SOLID NEUTRAL: YES
POLE PANEL: 24

MLO: 225 AMP
MAIN BRKR: 200 AMP
MAIN BUS: –
A.I.C. RATING: 10,000 @ 240V
MOUNTING: SURFACE

CIRCUIT DESCRIPTION	CKT BRKR NO	TRIP	POLE	AMPS	Ø	AMPS	CKT BRKR POLE	TRIP	NO	CIRCUIT DESCRIPTION
SPARE	1	20	1	–	A	–	1	20	2	SPARE
SPARE	3	20	1	–	B	–	1	20	4	SPARE
REC – UTILITY BUILDING	5	20	1	3.0	C	–	1	20	6	SPARE
LIGHTS – UTILITY BUILDING	7	20	1	2.0	A	–	1	20	8	SPARE
SPARE	9	20	1	–	B	–	1	20	10	SPARE
SPARE	11	20	1	–	C	–	1	20	12	SPARE
SPACE	13	–	1	–	A	–	1	–	14	SPACE
SPACE	15	–	1	–	B	–	1	–	16	SPACE
SPACE	17	–	1	–	C	–	1	–	18	SPACE
SPACE	19	–	1	–	A	–	1	–	20	SPACE
SPACE	21	–	1	–	B	–	1	–	22	SPACE
SPACE	23	–	1	–	C	–	1	–	24	SPACE
TOTALS (AMPERES)	**AØ**	2.0	**BØ**	–	**CØ**	3.0				

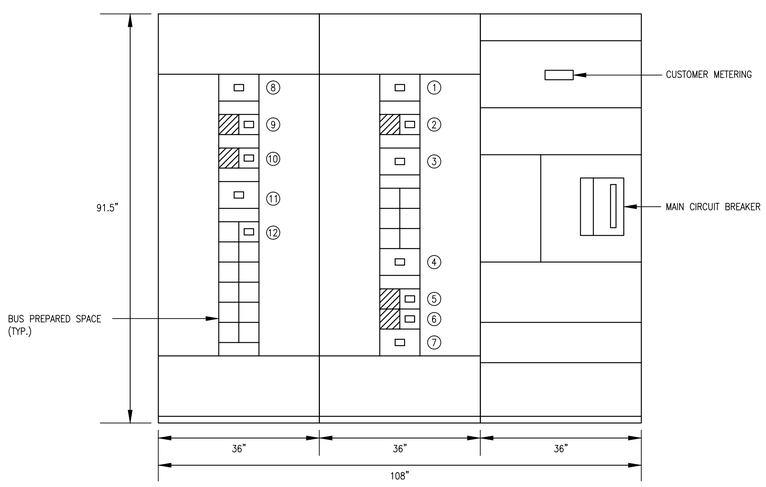

SWITCHBOARD MDS ELEVATION

NO SCALE

SWITCHBOARD SCHEDULE

PANEL MDS | 277/480 VOLTS | 3000 AMP MAIN BREAKER
LOCATION ELEC. BLDG. | 3 PHASE 4 WIRE | 3000 AMP MAIN BUS
MOUNTING SURFACE | SOLID NEUTRAL | 65000 AMP A.I.C. @ 480 V

ITEM	CIRCUIT BREAKER POLE	FRAME	TRIP	SYMMETRICAL AMP RATING	EQUIPMENT SERVED	REMARKS
1	3	400	400	65,000	TURBINE TESTING (FUTURE)	
2	3	225	125	65,000	75 KVA TRANSFORMER	
3	3	400	400	65,000	400 AMP PANELBOARD (480Y/277V)	
4	3	400	400	65,000	SHORE POWER CONNECTION STATION No. 1 – BREAKER 400A	
5	3	250	200	65,000	SHORE POWER CONNECTION STATION No. 1 – BREAKER 200A	
6	3	250	200	65,000	SHORE POWER CONNECTION STATION No. 1 – BREAKER 200B	
7	3	400	400	65,000	SHORE POWER CONNECTION STATION No. 1 – BREAKER 400B	
8	3	400	400	65,000	SHORE POWER CONNECTION STATION No. 2 – BREAKER 400A	
9	3	250	200	65,000	SHORE POWER CONNECTION STATION No. 2 – BREAKER 200A	
10	3	250	200	65,000	SHORE POWER CONNECTION STATION No. 2 – BREAKER 200B	
11	3	400	400	65,000	SHORE POWER CONNECTION STATION No. 2 – BREAKER 400B	
12	3	250	200	65,000	SPARE	

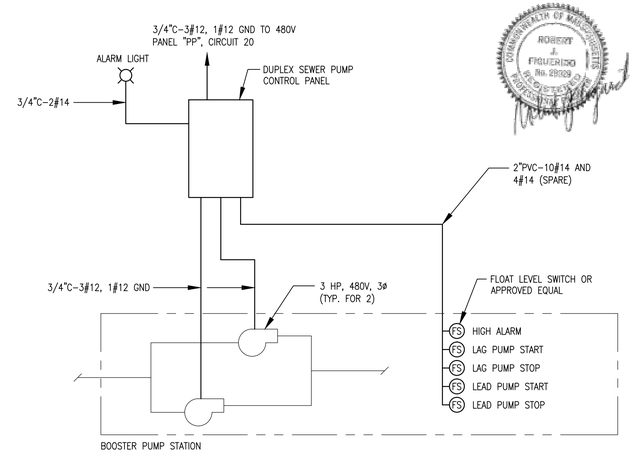

DUPLEX SEWER PUMP STATION CONTROL WIRING DIAGRAM

NO SCALE

APEX

ROCKVILLE, MD
SOUTH WINDSOR, CT - BOSTON, MA - NEW BEDFORD, MA - HOLYOKE, MA

184 HIGH STREET, SUITE 502
BOSTON, MA 02210

58H CONNECTICUT AVENUE
SOUTH WINDSOR, CT

This drawings prepared by Apex for this project are instruments of Apex's service for use solely with respect to this project, and Apex shall be deemed the author of the Drawing and shall retain all common law, statutory and other reserved rights with respect thereto, including the copyright. The Documents shall not be used on other projects, for additions to this project or for completion of this project by others, except by agreement in writing and with appropriate compensation to Apex.

Maguire Group Inc.
Architects / Engineers / Planners
225 Chapman Street, 4th Floor
Providence,Rhode Island 02905
401–272–6000
www.maguiregroup.com

PROJECT
NEW BEDFORD MARINE COMMERCE TERMINAL

OWNER
MASSACHUSETTS CLEAN ENERGY CENTER
55 SUMMER STREET, 9TH FLOOR
BOSTON, MASSACHUSETTS

NO.	DATE	DESCRIPTION	BY
1	4/01/13	FOR CONSTRUCTION	JAJ

PROJECT NO.	6690
CADD FILE	
DESIGNED BY	DNL
DRAWN BY	RAB
CHECKED BY	JAJ
DATE	4/01/13
DRAWING SCALE	NONE

GRAPHIC SCALE

SHEET TITLE

ELECTRICAL RISER DIAGRAMS AND SCHEDULES

DRAWING NO.

D-9