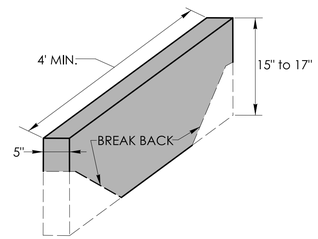

STONE CURBING

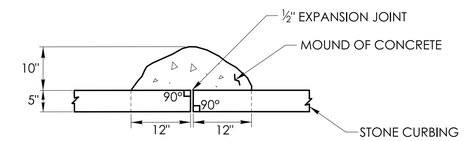

PLAN

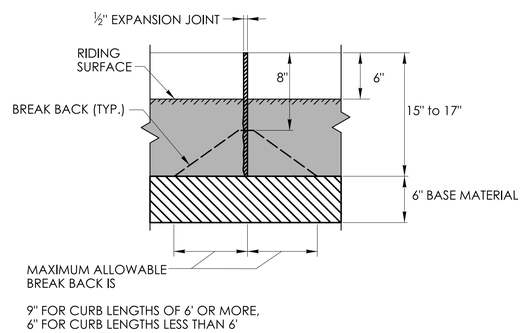

FRONT ELEVATION

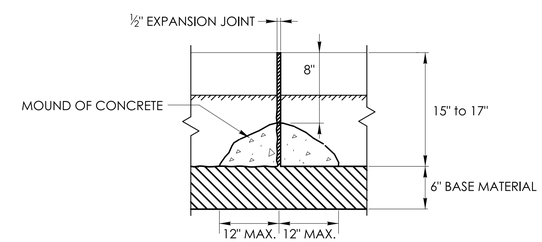

BACK ELEVATION

MOUND OF CONCRETE AT ALL JOINTS FOR STONE CURBING

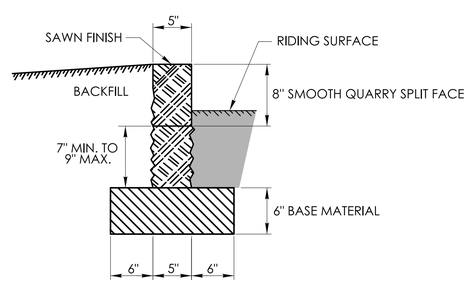

SECTION

	NOT TO SCALE	SIGNATURE BLOCK: OFFICE OF ENGINEERING 2800 BERLIN TURNPIKE NEWINGTON, CT 06111	SUBMITTED BY: Digitally signed by Leo Fontaine, P.E. Date: 2024.12.16 13:59:57-05'00'	APPROVED BY: Digitally signed by Michael N. Calabrese, P.E. Date: 2025.01.21 13:15:08-05'00'	CTDOT CONNECTICUT DEPARTMENT OF TRANSPORTATION	CTDOT STANDARD SHEET	STANDARD SHEET TITLE: STONE CURBNG	STANDARD SHEET NO.: HW-813_02

PLOTTED DATE: 10/22/2024