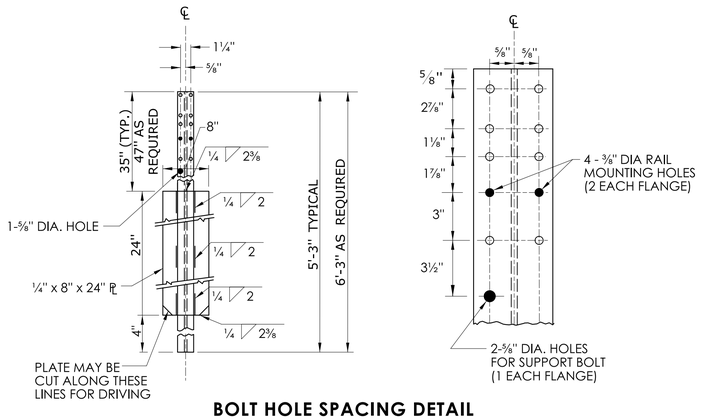

BOLT HOLE SPACING DETAIL
FRONT ELEVATION
S3 x 5.7 POST
(SEE NOTE 1)

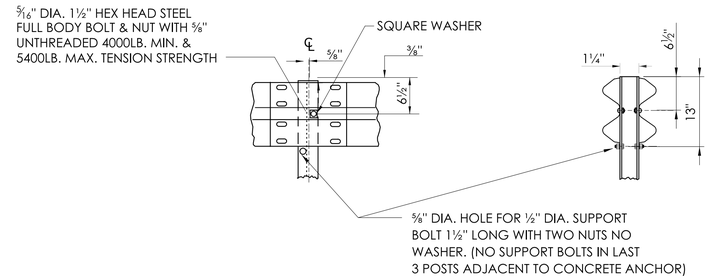

TYPICAL RAIL MOUNTING & SUPPORT BOLT FOR MD-I RAIL

GENERAL NOTES:

1. EIGHT (8) ADDITIONAL ⅜" DIA. HOLES (AS REQUIRED FOR 3 CABLE GUIDERAIL) ARE ACCEPTABLE IN POSTS.
2. J-HOOK BOLTS MAY BE SUBSTITUTED FOR BOTTOM PLATE ANCHORAGE IN CONCRETE END ANCHORS OF THE SAME SIZE STRENGTH AND LENGTH AS NOTED ON THE PLANS.
3. SEE SHEET HW-910_01 FOR HARDWARE AND DELINEATOR DETAILS.

TABLE "A"	
CURVATURE (DEGREE OR RADIUS)	POST SPACING
LESS THAN 26°(220') RAD OR MORE)	12' - 6"
219' TO 111'	6' - 3"
110' TO 76'	4' - 2"
75' TO 50'	3' - 1½"
LESS THAN 50'	USE NOT RECOMMENDED

FOR CURVES WITH RADII OF 150' OR LESS ALL RAIL ELEMENTS SHALL BE SHOP FABRICATED TO THE PROPER RADIUS.

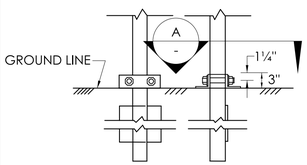

BEARING CLAMP

NOTE: BEARING CLAMP SHALL BE INSTALLED ONLY ON POST NEAREST END ANCHOR

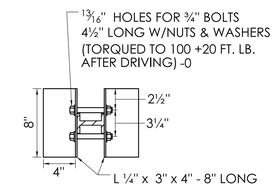

SECTION A -

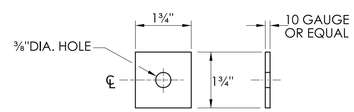

PLACE WASHER IN VALLEY OF RAIL ELEMENT FOR MOUNTING TO POST

SQUARE WASHER

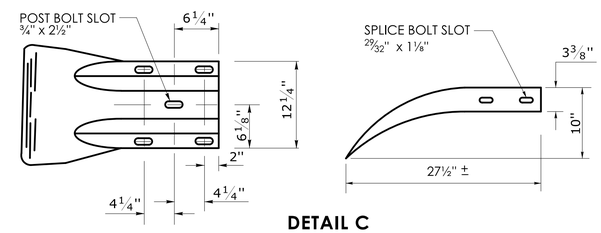

DETAIL C

W-BEAM TERMINAL ELEMENT

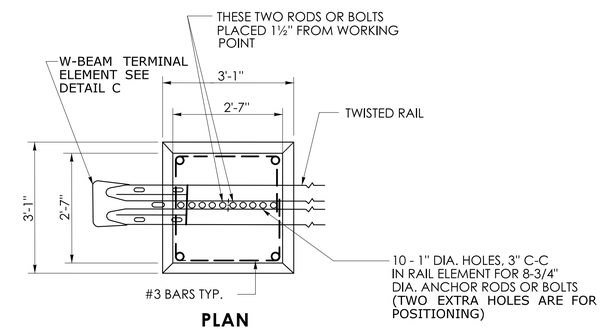

PLAN

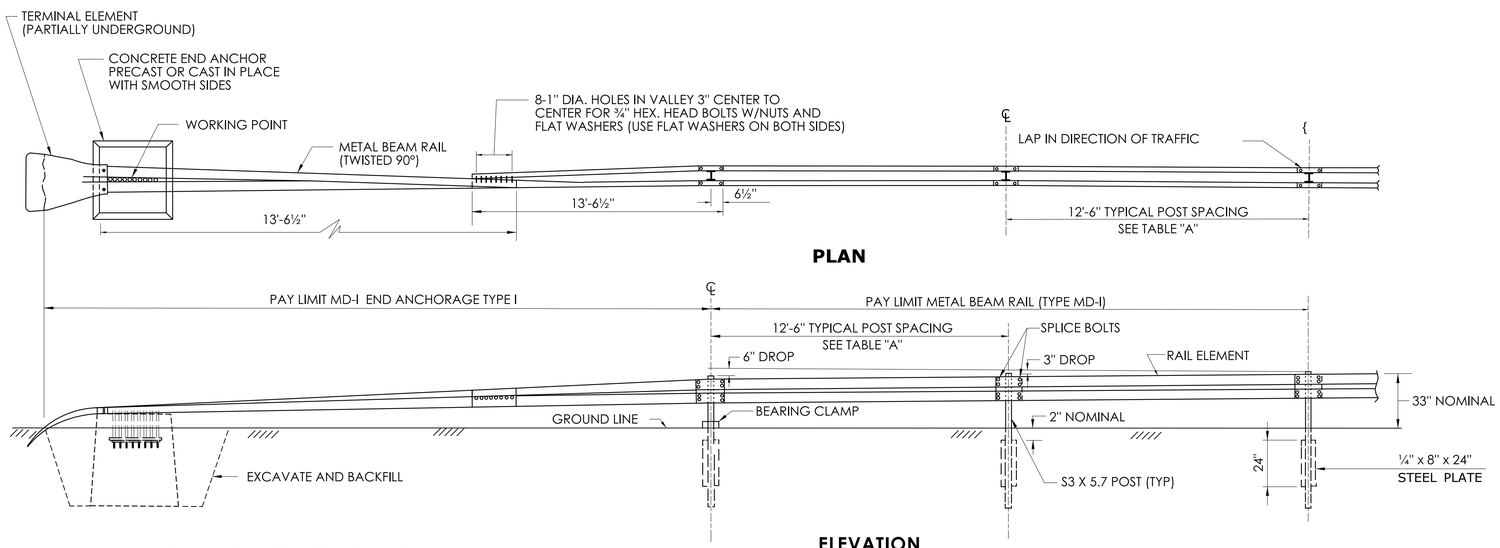

PLAN

ELEVATION

MD-I END ANCHORAGE TYPE I

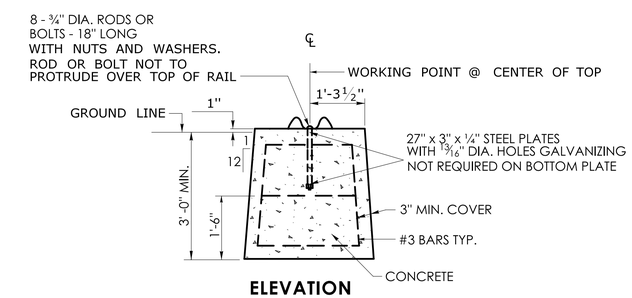

ELEVATION

DETAIL B

CONCRETE END ANCHOR FOR MEDIAN

	NOT TO SCALE	SIGNATURE BLOCK: OFFICE OF ENGINEERING 2800 BERLIN TURNPIKE NEWINGTON, CT 06111	SUBMITTED BY: Digitally signed by Leo Fontaine, P.E. Date: 2024.12.19 14:57:07-05'00'	APPROVED BY: Digitally signed by Michael N. Calabrese, P.E. Date: 2025.01.29 12:26:06-05'00'	CTDOT CONNECTICUT DEPARTMENT OF TRANSPORTATION	CTDOT STANDARD SHEET	STANDARD SHEET TITLE: METAL BEAM RAIL (TYPE MD-I) GUIDERAIL AND METAL BEAM RAIL (TYPE MD-I) END ANCHORAGE TYPE I	STANDARD SHEET NO.: HW-910_18

PLOTTED DATE: 10/23/2024