GENERAL NOTES:

1. PIPE OPENING (P) DIMENSIONS ARE NOMINAL (SEE CHART*).
2. INSTALL THE PERVIOUS STRUCTURE BACKFILL AS SHOWN IN SECTION A AND B, AND ONLY ALONG THE LENGTH OF THE ENDWALL.
3. PROVIDE A 1" CHAMFER ON ALL EXPOSED EDGES OR AS SHOWN.
4. SEE CHARTS BELOW FOR STANDARD WALL DIMENSIONS AND STEEL REINFORCING DETAILS.
5. ALL HORIZONTAL BARS SHOWN ARE NO. 4 BARS AND ALL VERTICAL BARS SHOWN ARE NO. 4 BENT BARS. SEE SHEETS HW-505_01b AND HW-505_01c FOR REINFORCING DETAILS.
6. THE LENGTH AND QUANTITY OF NO. 4 BARS - SHORT (NOMINAL LENGTH) VARY FOR EACH WALL SIZE. THESE BARS ARE SHOWN ON HW-505_01b AND HW-505_01c FOR REFERENCE ONLY.

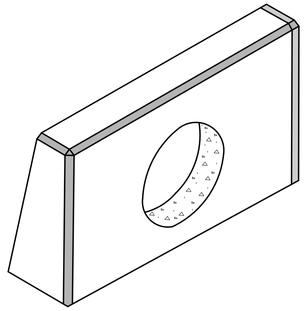

STRAIGHT ENDWALL

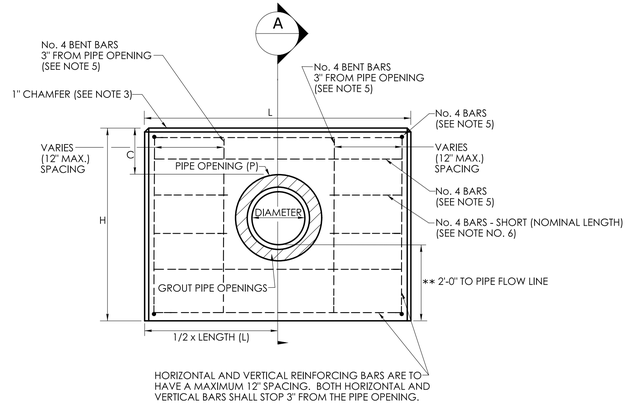

FRONT ELEVATION

** THIS ENDWALL CONFIGURATION IS TO BE USED WHEN ALL MATERIAL EXCEPT STANDARD RIPRAP IS TO BE INSTALLED AT THE OUTLET. A 2'-0" ELEVATION DIFFERENCE IS PROVIDED FROM THE BASE TO THE PIPE FLOW LINE.

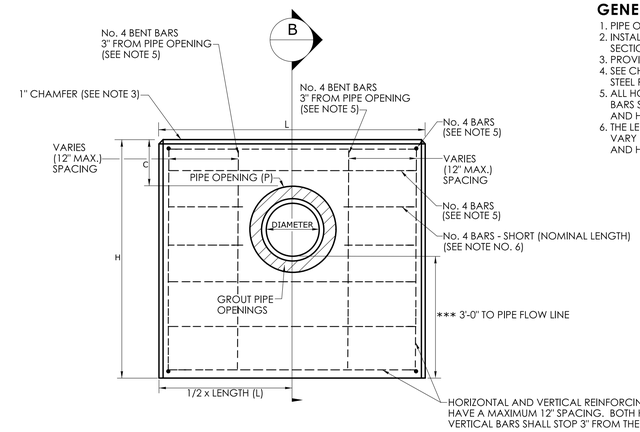

FRONT ELEVATION

*** THIS ENDWALL CONFIGURATION IS TO BE USED WHEN STANDARD RIPRAP IS INSTALLED AT THE OUTLET. A 3'-0" ELEVATION DIFFERENCE IS PROVIDED TO ACCOMMODATE THE PLACEMENT OF THE STANDARD RIPRAP.

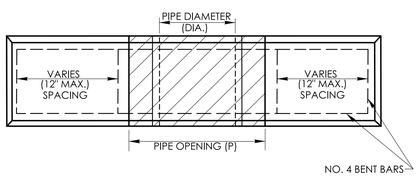

STRAIGHT ENDWALL PLAN

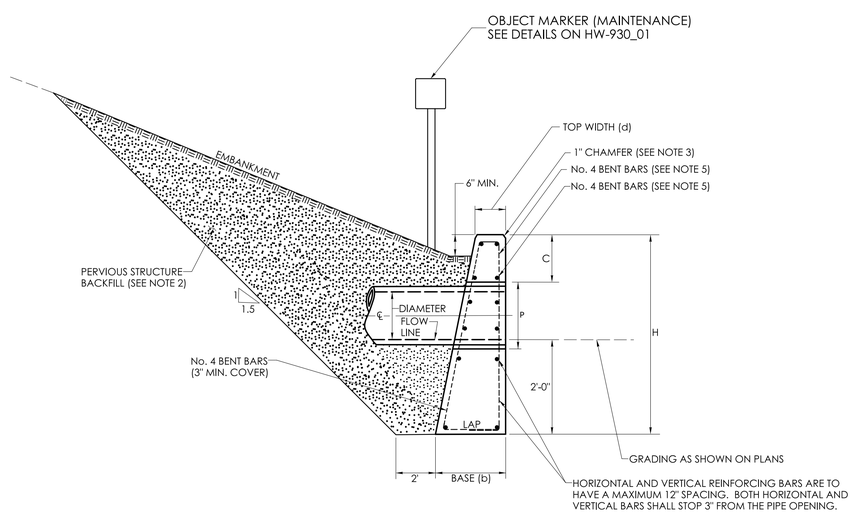

SECTION A

STRAIGHT ENDWALL

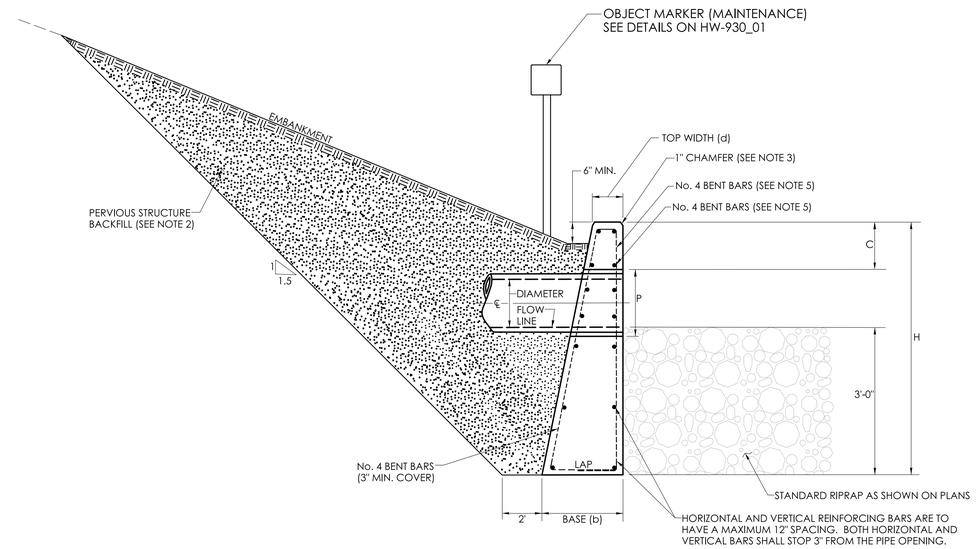

SECTION B

STRAIGHT ENDWALL FOR STANDARD RIPRAP APPLICATION

STRAIGHT ENDWALL DIMENSIONS

CONCRETE									REINFORCING STEEL		
PIPE DIAMETER (DIA.)	CLEARANCE (C)	*PIPE OPENINGS (P)	TOTAL HEIGHT (H)	LENGTH (L)	TOP WIDTH (d)	BASE (b)	VOL.		PIPE DIAMETER (DIA.)	NO. 4 BENT BARS	NO. 4 BARS - (NOMINAL LENGTH)
IN.	IN.	IN.	FT-IN.	FT-IN.	FT-IN.	FT-IN.	C.Y.		IN.	EA.	EA.
12"	14"	20"	4'-6"	4'-6"	1'-3"	2'-0"	1.10		12"	4	14 - (4'-0")
15"	13.5"	24"	4'-9"	5'-6"	1'-3"	2'-0"	1.39		15"	6	14 - (5'-0")
18"	14"	26"	5'-0"	6'-6"	1'-3"	2'-0"	1.75		18"	6	14 - (6'-0")
24"	14"	32"	5'-6"	8'-6"	1'-6"	2'-3"	2.87		24"	8	16 - (8'-0")
30"	12"	42"	6'-0"	10'-6"	1'-9"	2'-6"	3.98		30"	8	14 - (10'-0")
36"	12"	48"	6'-6"	12'-6"	1'-9"	2'-8"	5.67		36"	10	16 - (12'-0")
42"	12"	54"	7'-0"	14'-6"	2'-0"	3'-0"	7.99		42"	12	16 - (14'-0")
48"	11"	62"	7'-6"	16'-6"	2'-0"	3'-0"	9.59		48"	14	18 - (16'-0")

SEE PROJECT PLANS FOR NON-STANDARD ENDWALL DETAILS

STRAIGHT ENDWALL DIMENSIONS (FOR STANDARD RIPRAP APPLICATION)

CONCRETE									REINFORCING STEEL		
PIPE DIAMETER (DIA.)	CLEARANCE (C)	*PIPE OPENINGS (P)	TOTAL HEIGHT (H)	LENGTH (L)	TOP WIDTH (d)	BASE (b)	VOL.		PIPE DIAMETER (DIA.)	NO. 4 BENT BARS	NO. 4 BARS - (NOMINAL LENGTH)
IN.	IN.	IN.	FT-IN.	FT-IN.	FT-IN.	FT-IN.	C.Y.		IN.	EA.	EA.
12"	14"	20"	5'-6"	4'-6"	1'-3"	2'-2"	1.52		12"	4	16 - (4'-0")
15"	13.5"	24"	5'-9"	5'-6"	1'-3"	2'-2"	1.88		15"	6	16 - (5'-0")
18"	14"	26"	6'-0"	6'-6"	1'-3"	2'-2"	2.31		18"	6	16 - (6'-0")
24"	14"	32"	6'-6"	8'-6"	1'-6"	2'-5"	3.66		24"	8	18 - (8'-0")
30"	12"	42"	7'-0"	10'-6"	1'-9"	2'-8"	5.03		30"	8	16 - (10'-0")
36"	12"	48"	7'-6"	12'-6"	1'-9"	2'-10"	6.98		36"	10	18 - (12'-0")
42"	12"	54"	8'-0"	14'-6"	2'-0"	3'-2"	9.68		42"	12	18 - (14'-0")
48"	11"	62"	8'-6"	16'-6"	2'-0"	3'-2"	11.50		48"	14	20 - (16'-0")

SEE PROJECT PLANS FOR NON-STANDARD ENDWALL DETAILS

NOT TO SCALE

SIGNATURE BLOCK:
OFFICE OF ENGINEERING
2800 BERLIN TURNPIKE
NEWINGTON, CT 06111

SUBMITTED BY: Digitally signed by Leo Fontaine, P.E. Date: 2024.12.16 10:12:25-05'00'

APPROVED BY: Digitally signed by Michael N. Calabrese, P.E. Date: 2025.01.21 12:31:04-05'00'

CTDOT — CONNECTICUT DEPARTMENT OF TRANSPORTATION

CTDOT STANDARD SHEET

STANDARD SHEET TITLE: STRAIGHT ENDWALLS

STANDARD SHEET NO.: HW-505_01a

PLOTTED DATE: 10/22/2024