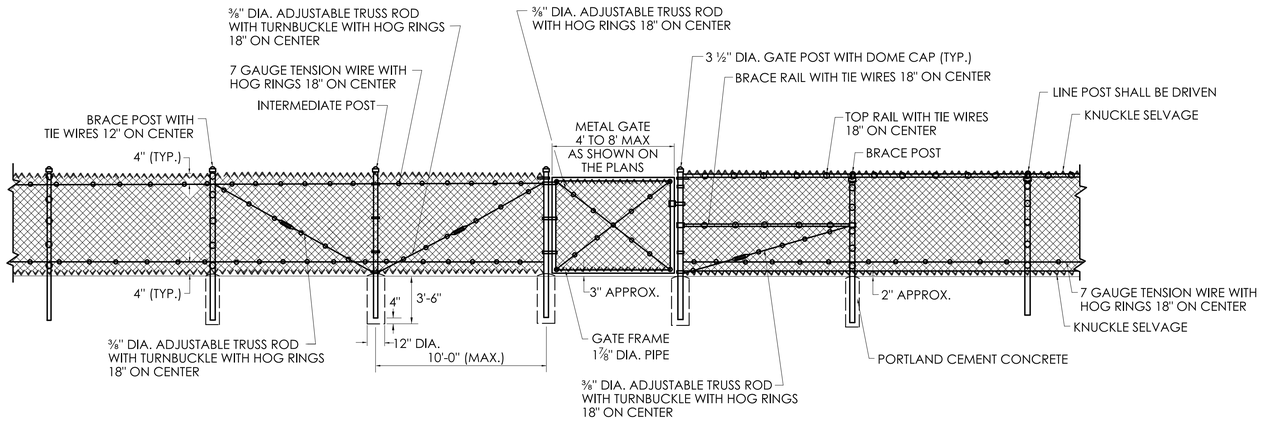

SINGLE METAL GATE

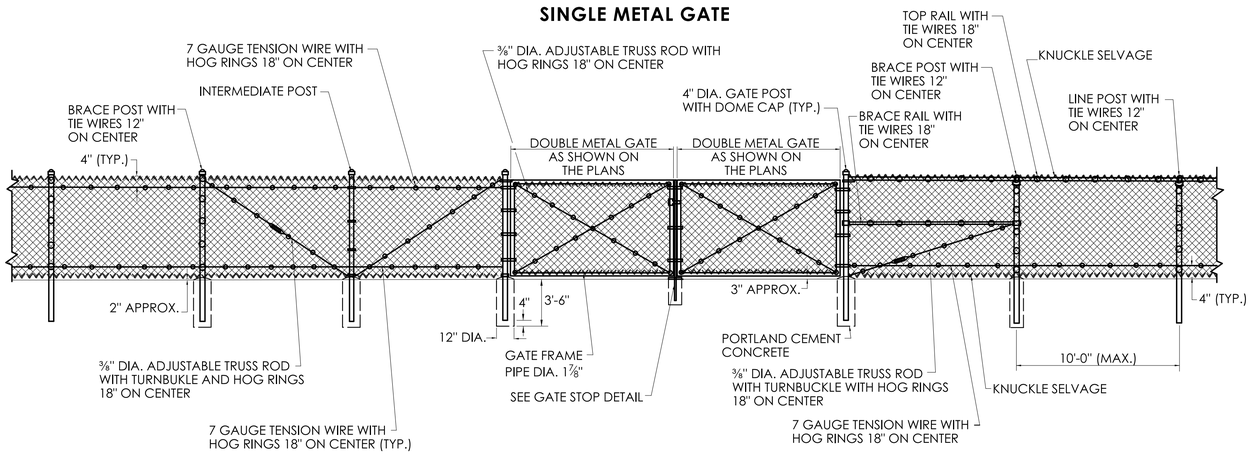

DOUBLE METAL GATE

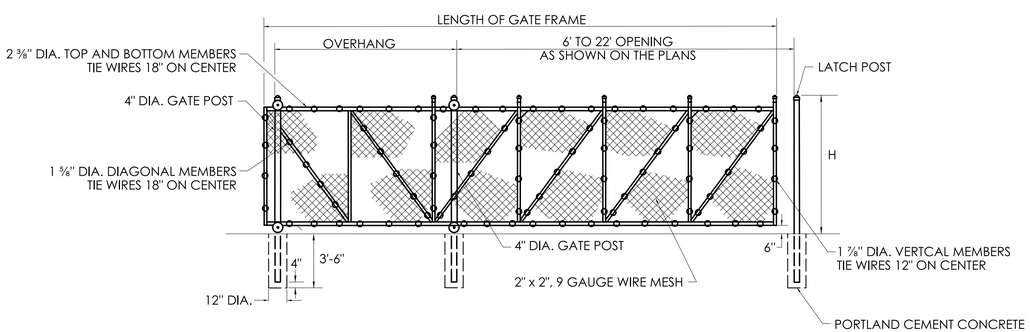

SINGLE CANTILEVERED SLIDING GATE

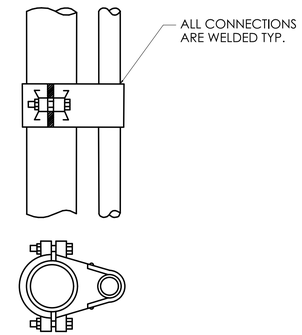

TOP GATE HINGE

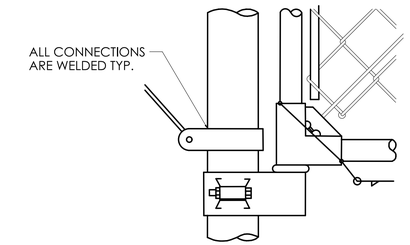

GATE HINGE BOTTOM

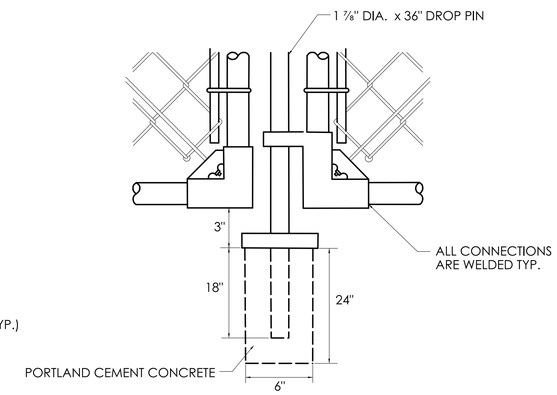

GATE STOP

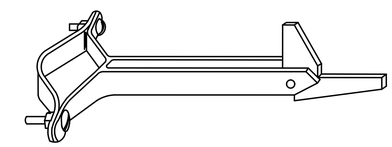

GATE HOLD BACK

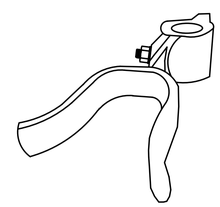

GATE LATCH

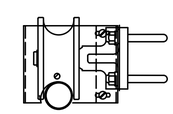

ROLLER ASSEMBLY WITH ROLL-R-GUARD (TOP)

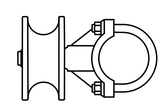

ROLLER ASSEMBLY (GUARD NOT SHOWN)

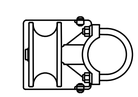

ROLLER ASSEMBLY WITH ROLL-R-GUARD (BOTTOM)

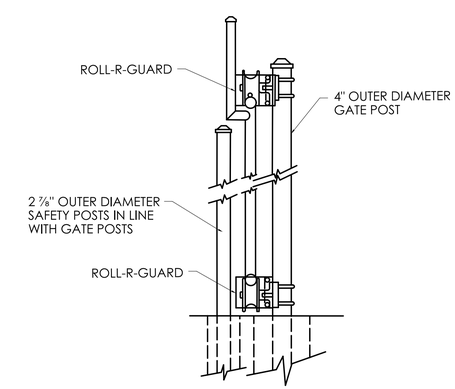

SECTION AT GATE POSTS WITH ROLLER COVERS/GUARDS AND SAFETY POSTS

	NOT TO SCALE	SIGNATURE BLOCK: OFFICE OF ENGINEERING 2800 BERLIN TURNPIKE NEWINGTON, CT 06111	SUBMITTED BY: Digitally signed by Leo Fontaine, P.E. Date: 2024.12.19 15:12:29-05'00'	APPROVED BY: Digitally signed by Michael N. Calabrese, P.E. Date: 2025.01.29 12:44:14-05'00'	CTDOT CONNECTICUT DEPARTMENT OF TRANSPORTATION	CTDOT STANDARD SHEET	STANDARD SHEET TITLE: CHAIN LINK FENCE GATES	STANDARD SHEET NO.: HW-913_02

PLOTTED DATE: 10/23/2024