GENERAL NOTES:

1. PROVIDE 2 FOOT MINIMUM EMBANKMENT BETWEEN THE BACK OF THE GUIDERAIL POST(S) / CONCRETE BARRIER AND THE BREAK IN THE FILL SLOPE.
2. INSTALL THRIE - BEAM TERMINAL CONNECTOR BETWEEN NESTED GUIDERAIL ELEMENTS, EXCEPT FOR SINGLE DIRECTION ROADWAY APPPLICATION ONLY WHERE THE THRIE - BEAM TERMINAL CONNECTOR IS INSTALLED OUTSIDE OF NESTED GUIDERAIL ELEMENTS ON THE TRAILING END.
3. DELINEATORS SHALL BE INSTALLED ON THE POST CLOSEST TO THE DESIGNATED SPACING. SEE SHEET HW-910_20 FOR W-BEAM DELINEATOR DETAILS.

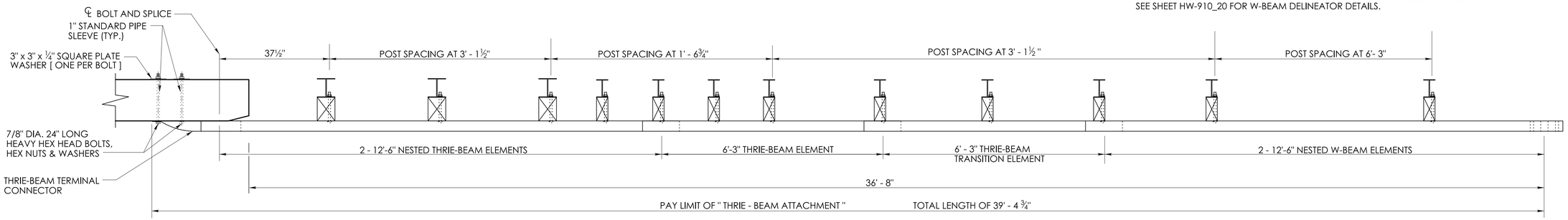

PLAN

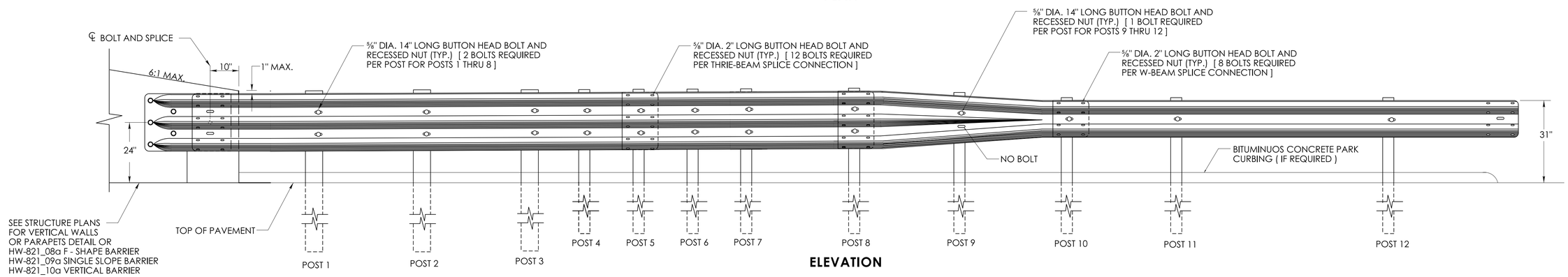

ELEVATION

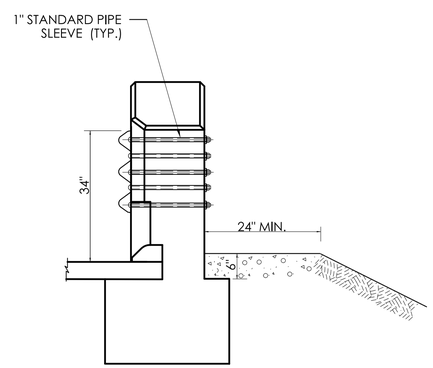

THRIE BEAM CONNECTION

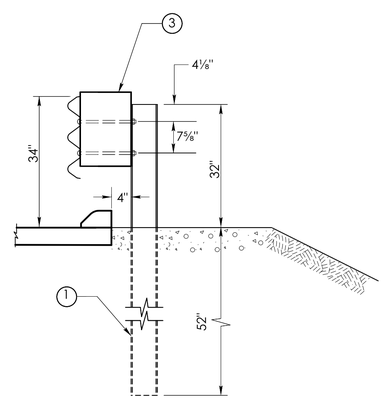

POST 1,2 & 3

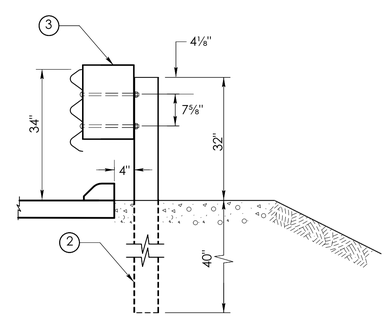

POST 4,5,6,7 & 8

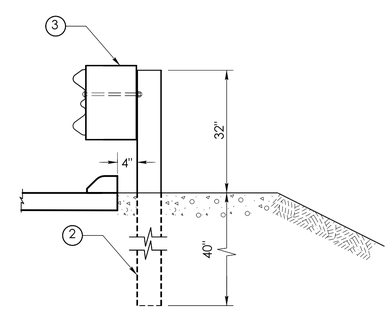

POST 9

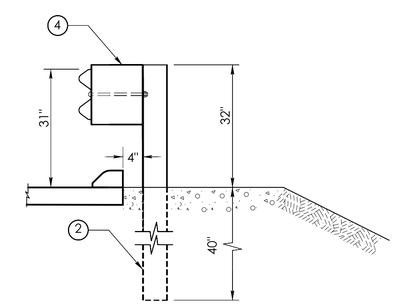

POST 10, 11 & 12

LEGEND

1. W6 x 15, 7 FOOT LONG STEEL POST
2. W6 x 8.5 OR W6 x 9, 6 FOOT LONG STEEL POST
3. 6" x 12" x 19" TREATED TIMBER BLOCKOUT
4. 6" x 12" x 14 ¼" TREATED TIMBER BLOCKOUT

MASH 2016 COMPLIANT
APPROVAL ID. 2019-01

	NOT TO SCALE	SIGNATURE BLOCK: OFFICE OF ENGINEERING 2800 BERLIN TURNPIKE NEWINGTON, CT 06111	SUBMITTED BY: Digitally signed by Leo Fontaine, P.E. Date: 2024.12.19 15:06:03-05'00'	APPROVED BY: Digitally signed by Michael N. Calabrese, P.E. Date: 2025.01.29 12:37:54-05'00'	CTDOT CONNECTICUT DEPARTMENT OF TRANSPORTATION	CTDOT STANDARD SHEET	STANDARD SHEET TITLE: THRIE-BEAM ATTACHMENT	STANDARD SHEET NO.: HW-910_27

PLOTTED DATE: 10/23/2024