GENERAL NOTES:

1. THE FIRST AND LAST UNIT OF A TEMPORARY TRAFFIC BARRIER LAYOUT SHALL BE 20 FOOT IN LENGTH AND FULLY PINNED (9 PINS) ON BOTH SIDES.
2. ANCHOR PINS SHALL NOT ALTERNATE SIDES.
3. TEMPORARY TRAFFIC BARRIER (PINNED) SHALL BE FULLY PINNED (9 PINS) IN LOCATIONS WHERE THE BARRIERS ARE DIVIDING OPPOSING TRAFFIC.
4. ALL ANCHOR PINS INSTALLED SHALL NOT PROJECT BEYOND THE TEMPORARY TRAFFIC BARRIER'S SURFACE.
5. INSTALL DELINEATORS WITH THE COLORS AND SPACING AS REQUIRED IN SECTION 8.22.
6. TEMPORARY TRAFFIC BARRIER DESIGN DEFLECTION DISTANCES BY TYPE;

BARRIER TYPE	**DEFLECTION
UNPINNED	40"
PINNED	20"

** MASH STANDARD DEFLECTION CAUSED BY 5,000 LB VEHICLE TRAVELING 62 MPH IMPACTING THE BARRIER AT 25 DEGREE ANGLE.

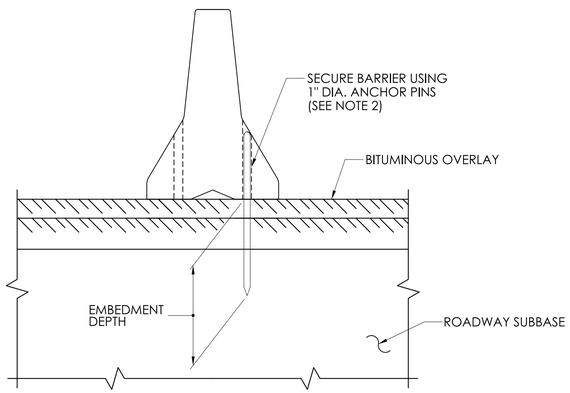

END VIEW - TEMPORARY TRAFFIC BARRIER (PINNED)

SEE NOTES 2 & 3 FOR PIN OPTIONS
ROADSIDE APPLICATION SHOWN

NOTE A

ENSURE THAT THE LENGTH OF THE ANCHOR PIN IS SUCH THAT THE FOLLOWING MINIMUM EMBEDMENT LENGTH IS OBTAINED:

(A) INTO CONCRETE PAVEMENT 0'-5"
(B) INTO FLEXIBLE PAVEMENT 1'-6"
(C) INTO UNPAVED AREA 2'-6"

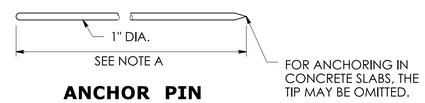

ANCHOR PIN

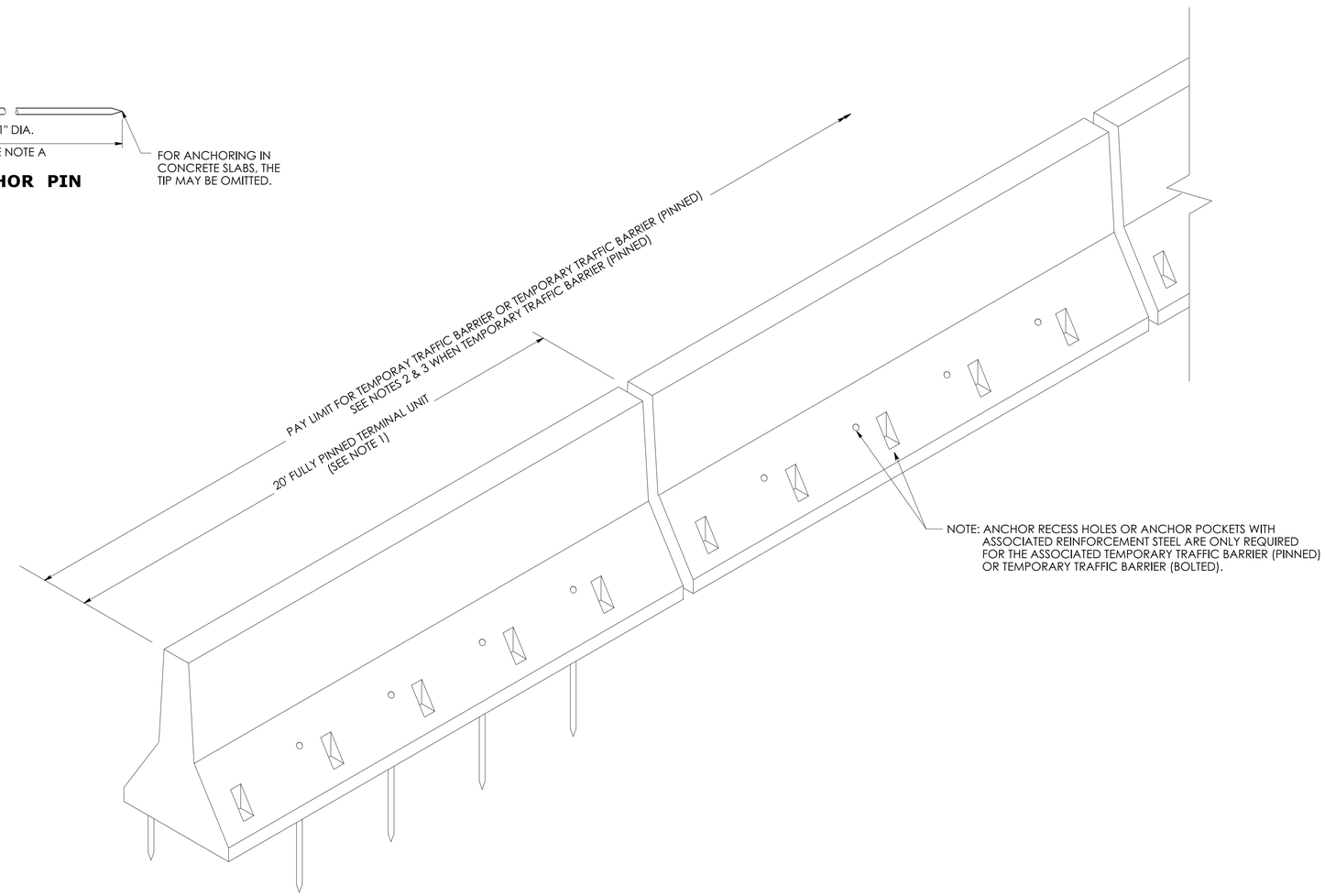

TEMPORARY TRAFFIC BARRIER

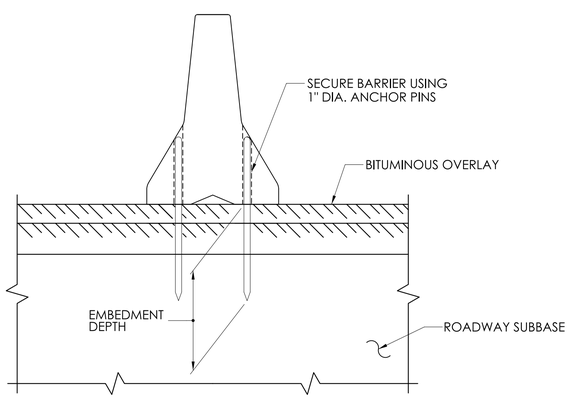

END VIEW - TERMINAL UNIT

MASH 2016 COMPLIANT
APPROVAL ID. 2021-01

	NOT TO SCALE	SIGNATURE BLOCK: OFFICE OF ENGINEERING 2800 BERLIN TURNPIKE NEWINGTON, CT 06111	SUBMITTED BY: Digitally signed by Leo Fontaine, P.E. Date: 2024.12.19 15:13:46-05'00'	APPROVED BY: Digitally signed by Michael N. Calabrese, P.E. Date: 2025.01.21 13:42:59-05'00'	CTDOT CONNECTICUT DEPARTMENT OF TRANSPORTATION	CTDOT STANDARD SHEET	STANDARD SHEET TITLE: TEMPORARY TRAFFIC BARRIER AND TEMPORARY TRAFFIC BARRIER (PINNED)	STANDARD SHEET NO.: HW-822_02c

PLOTTED DATE: 11/25/2024