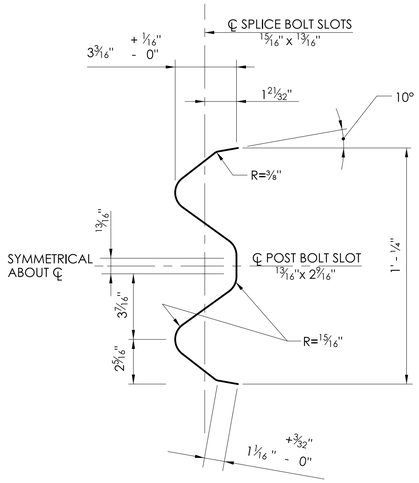

SECTION VIEW

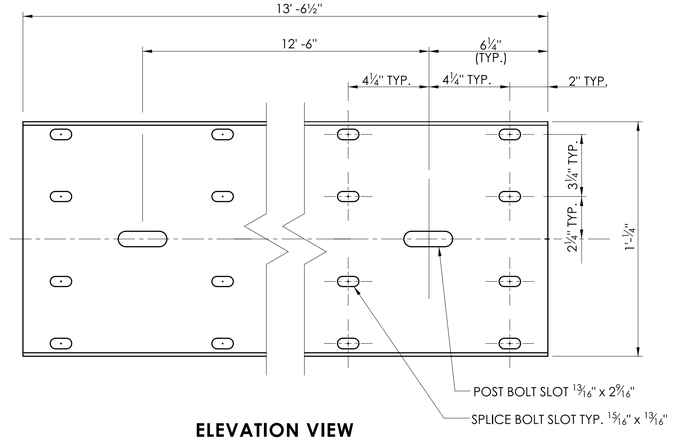

ELEVATION VIEW

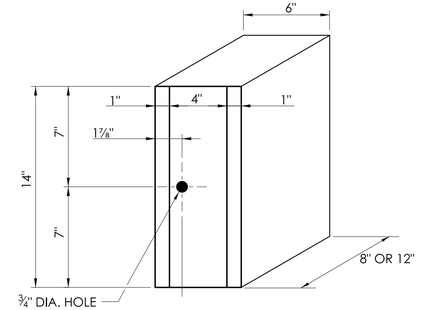

8" or 12" PLASTIC BLOCKOUT

NOMINAL DIMENSIONS

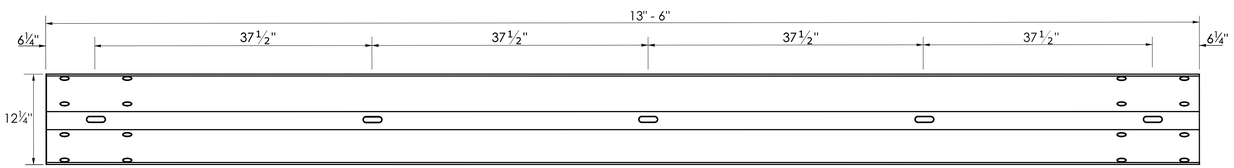

TYPICAL W-BEAM RAIL ELEMENT

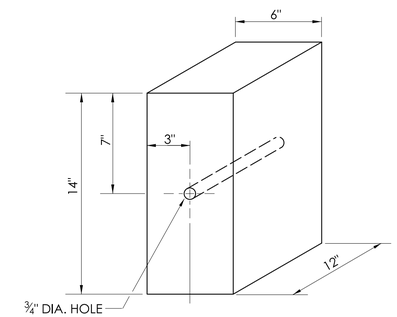

12" WOOD BLOCKOUT

GENERAL NOTES:

1. W6 x 9 POSTS MAY BE USED IN PLACE OF W6 x 8.5 POSTS.
2. W-BEAM GUIDERAIL SHALL USE CLASS A (12 GAUGE), TYPE II W-BEAM RAIL ELEMENTS.
3. SEVEN FOOT LONG STEEL POSTS (W6 X 8.5) ARE TO BE INSTALLED WHERE INDICATED ON THE PLANS OR AS DIRECTED BY THE ENGINEER.
4. ALL DIMENSIONS SUBJECT TO MANUFACTURING TOLERANCES

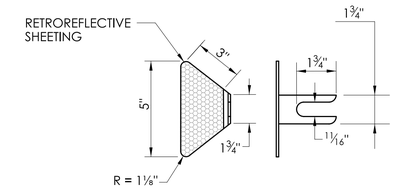

W-BEAM DELINEATOR

INSTALLATION NOTES:

1. INSTALL W-BEAM DELINEATORS ON RAIL THAT IS PARALLEL TO AND NOT GREATER THAN 8' FROM THE EDGE OF THE ROADWAY. A MINIMUM OF THREE W-BEAM DELINEATORS SHALL BE INSTALLED ON ANY LENGTH OF GUIDERAIL.
2. THE SPACING OF W-BEAM DELINEATORS IS 50 FEET, INSTALLED AT RAIL SPLICE LOCATIONS. SPACING IS 25 FEET ON RADII LESS THAN 300 FEET.
3. NO W-BEAM DELINEATORS ARE PERMITTED WITHIN 75 FEET OF THE IMPACT HEAD OF ANY TANGENTIAL OR FLARED IMPACT ATTENUATION SYSTEM.
4. RETROREFLECTIVE SHEETING SHALL BE WHITE EXCEPT ON THE LEFT SIDE OF DIVIDED STREETS, HIGHWAYS, RAMPS, AND ONE WAY ROADS IN THE DIRECTION OF TRAVEL WHERE IT SHALL BE YELLOW.
5. FOR HIGHWAY OFF RAMP, INSTALL W-BEAM DOUBLE SIDED DELINEATORS ACCORDING TO INSTALLATION REQUIREMENTS STATED BELOW FOR W-BEAM DOUBLE SIDED DELINEATORS.

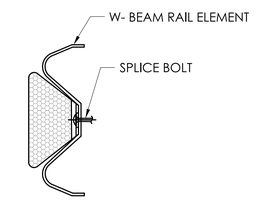

W-BEAM DELINEATOR INSTALLATION

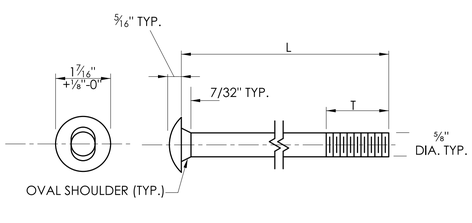

BUTTONHEAD BOLT

HEX NUT

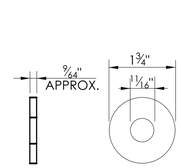

WASHER

[FWC16a]

DESIGNATOR	L	T	INTENDED USE
FBB01	1 1/4"	1 1/8"	RAIL SPLICE BOLTS
FBB02	2"	1 3/4"	RUB RAIL BOLTS
FBB03	10"	4"	POST BOLTS (8" BLOCK OUTS)
	14"	4"	POST BOLTS (12" BLOCK OUTS)
FBB04	18"	4"	POST BOLTS (2-8" BLOCK OUTS)
	22"	4"	POST BOLTS (CRT WOOD POST SYSTEM)

5/8" BUTTON HEAD BOLT(S) AND RECESSED NUT(S)

NOTE: AFTER GALVANIZING, THE NUT SHALL BE FREE RUNNING ON THE BOLT. DIAMETER SHOWN IS TYPICAL FOR ALL GUIDERAIL BOLTS. SEE DETAILS ABOVE FOR SPECIFIC LENGTHS.

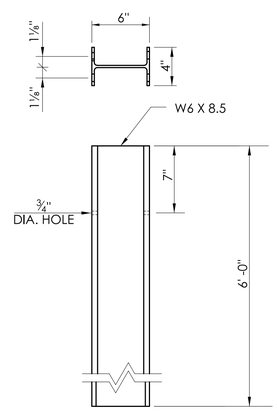

STEEL POST 6' - 0" LONG

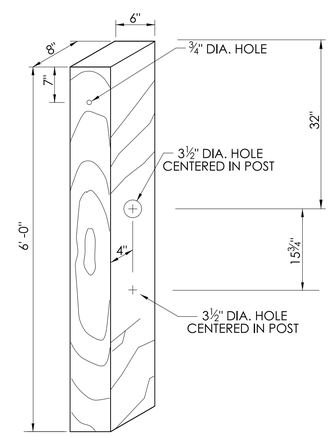

CONTROL RELEASE TIMBER (CRT) POST 6' - 0" LONG

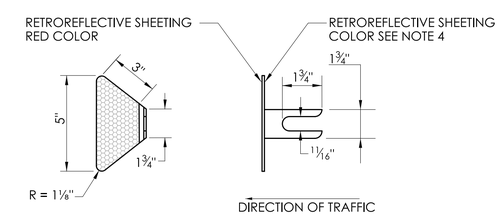

W-BEAM DOUBLE SIDED DELINEATOR FOR HIGHWAY OFF RAMPS

INSTALLATION NOTES:

1. INSTALL W-BEAM DOUBLE SIDED DELINEATORS ON HIGHWAY OFF RAMP'S W-BEAM GUIDERAIL BETWEEN THE PAINTED TRAFFIC STOP LINE TO THE FARTHEST "WRONG WAY" SIGNS FROM THE INTERSECTION.
2. INSTALL THE W-BEAM DOUBLE SIDED DELINEATORS AT 6'-3" SPACING.
3. NO W-BEAM DOUBLE SIDED DELINEATORS ARE PERMITTED WITHIN 75 FEET OF THE IMPACT HEAD OF ANY TANGENTIAL OR FLARED IMPACT ATTENUATION SYSTEM.
4. RETROREFLECTIVE SHEETING COLOR SHALL BE RED ON BACKSIDE (NOT FACING NORMAL DIRECTION OF TRAFFIC) WITH FRONT SIDE HAVING WHITE EXCEPT ON THE LEFT SIDE OF RAMPS,WHERE IT SHALL BE YELLOW.

	NOT TO SCALE	SIGNATURE BLOCK: OFFICE OF ENGINEERING 2800 BERLIN TURNPIKE NEWINGTON, CT 06111	SUBMITTED BY: Digitally signed by Leo Fontaine, P.E. Date: 2024.12.19 14:56:01-05'00'	APPROVED BY: Digitally signed by Michael N. Calabrese, P.E. Date: 2025.01.29 12:30:53-05'00'	CTDOT CONNECTICUT DEPARTMENT OF TRANSPORTATION	CTDOT STANDARD SHEET	STANDARD SHEET TITLE: MASH W-BEAM HARDWARE	STANDARD SHEET NO.: HW-910_20

PLOTTED DATE: 11/25/2024