GENERAL NOTE:
1. ALL DIMENSIONS SUBJECT TO MANUFACTURING TOLERANCES

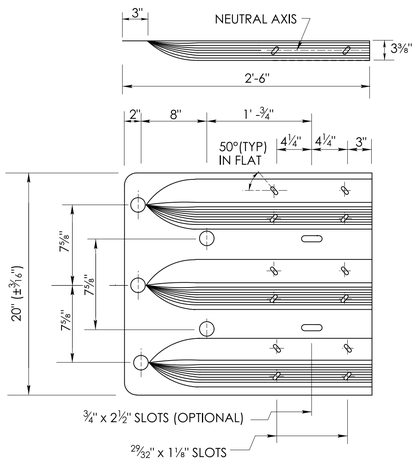

THRIE-BEAM TERMINAL CONNECTOR
[RTE01b]
(10 GUAGE)

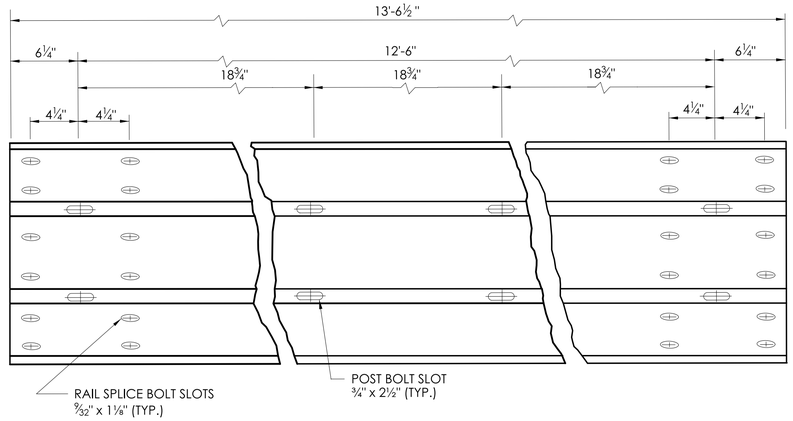

TYPICAL THRIE-BEAM RAIL ELEMENT
[RTM19a FOR 6'-3" AND RTM08a FOR 12'-6" THRIE-BEAM LENGTHS]
(12 GUAGE)

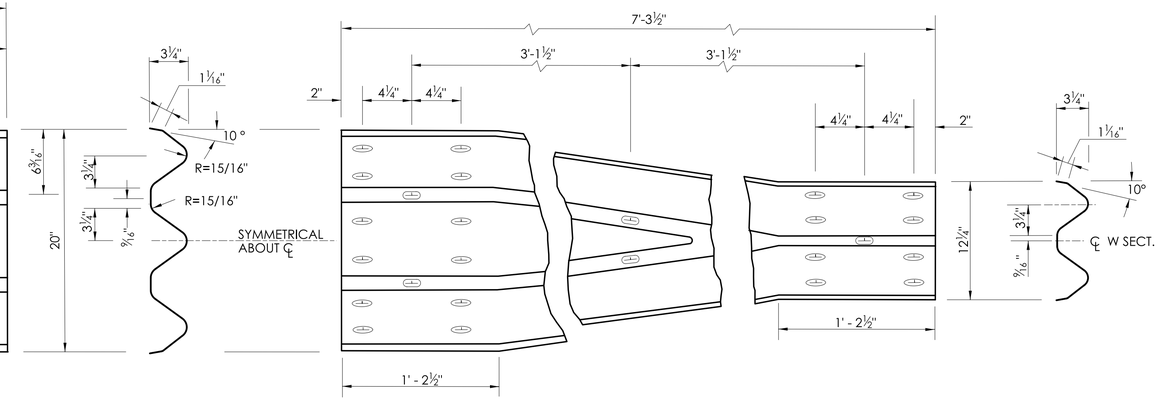

END VIEW OF TRANSITION

TYPICAL THRIE-BEAM TRANSITION ELEMENT
[RWT01b]
(10 GAUGE)

END VIEW OF TRANSITION

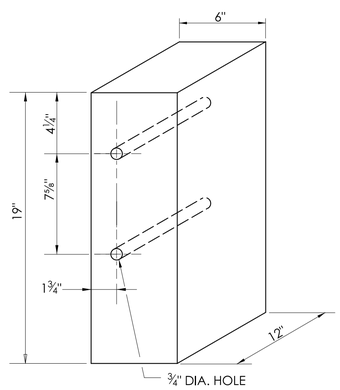

12" WOOD BLOCKOUT
[PDB18]
(FOR POSTS 1 TO 8)

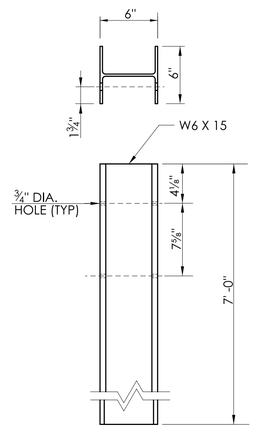

STEEL POST 7' - 0" LONG
[PDB18]
(FOR POSTS 1 TO 3)

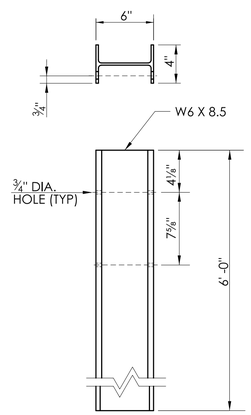

STEEL POST 6' - 0" LONG
[PDB18]
(FOR POSTS 4 TO 8)

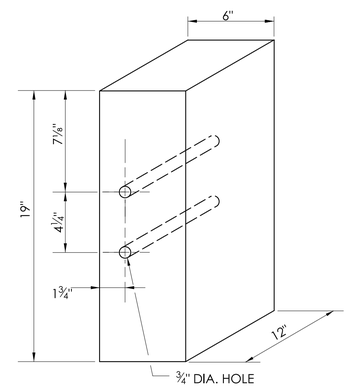

12" WOOD BLOCKOUT
[PDB18]
(FOR POST 9 ONLY)

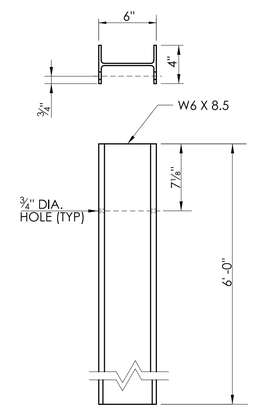

STEEL POST 6' - 0" LONG
[PDB18]
(FOR POST 9 ONLY)

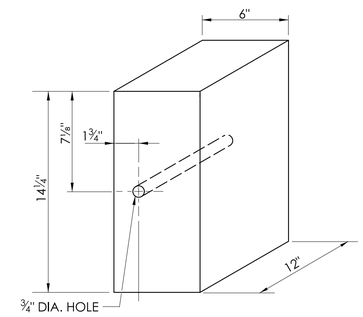

12" WOOD BLOCKOUT
[PDB10a]
(FOR POSTS 10 TO 12)

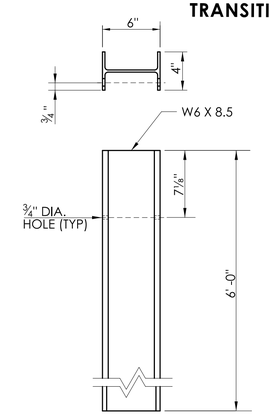

STEEL POST 6' - 0" LONG
[PDB18]
(POSTS 10 TO 12)

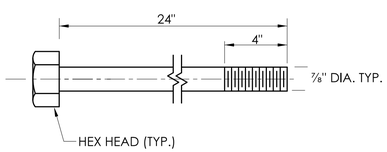

LONG HEAVY HEX HEAD BOLT
[FBX22b]
(FOR THRIE-BEAM TERMINAL CONNECTOR)

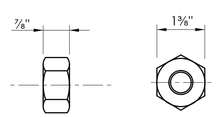

HEX NUT

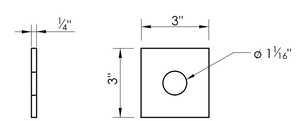

SQUARE PLATE WASHER
[FWR10]
(For THRIE-BEAM TERMINAL CONNECTOR, PLACED BETWEEN HEX NUT AND BACKSIDE OF CONCRETE STRUCTURE)

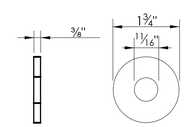

WASHER
[FWC16a]
(FOR WASHERS PLACED BETWEEN SPLICE NUT AND THRIE-BEAM TERMINAL CONNECTOR)

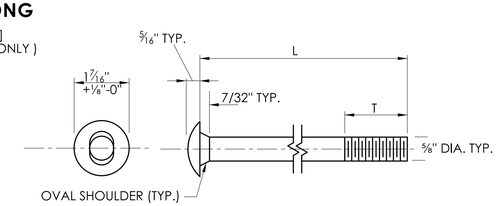

BUTTONHEAD BOLT

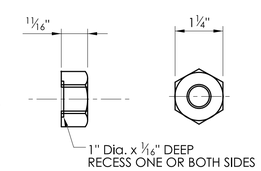

HEX NUT

DESIGNATOR	L	T	INTENDED USE
FBB02	2"	1⅞"	RAIL SPLICE BOLTS
FBB06	14"	4"	POST BOLT (12" BLOCK OUTS)

5/8" BUTTON HEAD BOLT(S) AND RECESSED NUT(S)

NOTE: AFTER GALVANIZING, THE NUT SHALL BE FREE RUNNING ON THE BOLT. DIAMETER SHOWN IS TYPICAL FOR ALL GUIDERAIL BOLTS. SEE DETAILS ABOVE FOR SPECIFIC LENGTHS.

	NOT TO SCALE	SIGNATURE BLOCK: OFFICE OF ENGINEERING 2800 BERLIN TURNPIKE NEWINGTON, CT 06111	SUBMITTED BY: Digitally signed by Leo Fontaine, P.E. Date: 2024.12.19 15:06:40-05'00'	APPROVED BY: Digitally signed by Michael N. Calabrese, P.E. Date: 2025.01.29 12:36:42-05'00'	CTDOT CONNECTICUT DEPARTMENT OF TRANSPORTATION	CTDOT STANDARD SHEET	STANDARD SHEET TITLE: THRIE-BEAM ATTACHMENT HARDWARE	STANDARD SHEET NO.: HW-910_26

PLOTTED DATE: 10/23/2024