GENERAL NOTES:

1. SEE SHEET HW-910_20 FOR MASH W-BEAM HARDWARE AND W-BEAM DELINEATOR DETAILS.
2. THREE BLOCKOUTS MAY BE USED FOR ONE POST ONLY. TWO BLOCKOUTS MAY BE USED FOR A SERIES OF POSTS. THE COST OF ADDITIONAL BLOCKOUTS AND LONGER BOLTS SHALL BE INCLUDED IN THE PRICE PER FOOT OF GUIDERAIL. EXTRA BLOCKOUTS AT TRANSITIONS TO BRIDGE PARAPETS SHOULD BE AVOIDED. DO NOT USE ADDITIONAL BLOCKS IF IT CAUSES THE POST TO BE DRIVIEN BEYOND AN EMBANKMENT HINGE POINT OR CAUSES A FIXED OBJECT TO BE WITHIN THE DEFLECTION DISTANCE OF THE BARRIER.
3. IF BLOCKOUTS DO NOT AVOID POST FROM OBSTRUCTION, ONE POST MAY BE OMITTED IF 50 FEET OF GUIDERAIL EXISTS ON BOTH SIDES OF LOCATION. USE METAL BEAM RAIL SPAN SECTION TYPE II OR III FOR MORE THAN ONE CONSECUTIVE OMITTED POST, SEE SHEET HW-910_24.
4. W-BEAM GUIDERAIL MAY BE PLACED 1' OR MORE FROM THE EDGE OF PAVEMENT ONLY ON SLOPES 10:1 OR FLATTER AND WITHOUT CURBING.
5. IF THE RAIL IS INSTALLED WITHIN 2' OF THE EDGE OF PAVEMENT, THE RAIL HEIGHT IS MEASURED FROM THE SHOULDER SLOPE EXTENDED TO THE RAIL. IF THE RAIL IS INSTALLED BEYOND 2' FROM THE EDGE OF PAVEMENT, THE RAIL HEIGHT IS MEASURED FROM THE GROUND DIRECTLY BELOW THE RAIL.
6. RAIL HEIGHT CONSTRUCTION TOLERANCE IS +/- 1 INCH.
7. FOR NEW CONSTRUCTION, PLACE 6 INCH LAYER OF PROCESSED AGGREGATE. FOR CONSTRUCTION PROJECTS WITH GUIDERAIL UPGRADE, THE CONTRACT PLANS MAY CALL OUT PROCESSED AGGREGATE ONLY TO BE PLACE IN LOCATION(S) OF EXISTING VERTICAL PAVEMENT EDGE DROP OFF AS A LEVELING MATERIAL, FILLING IN DEPRESSED AREAS.

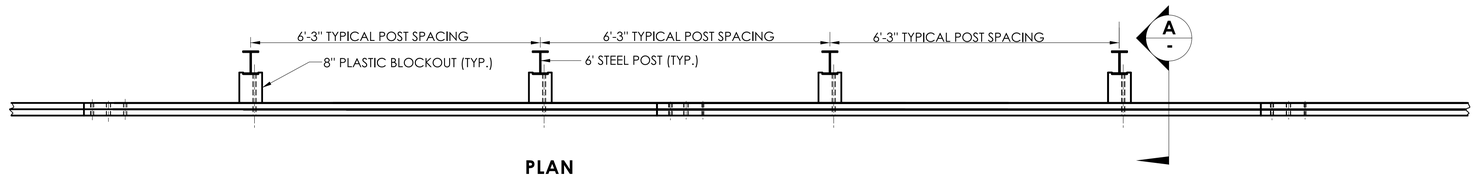

PLAN

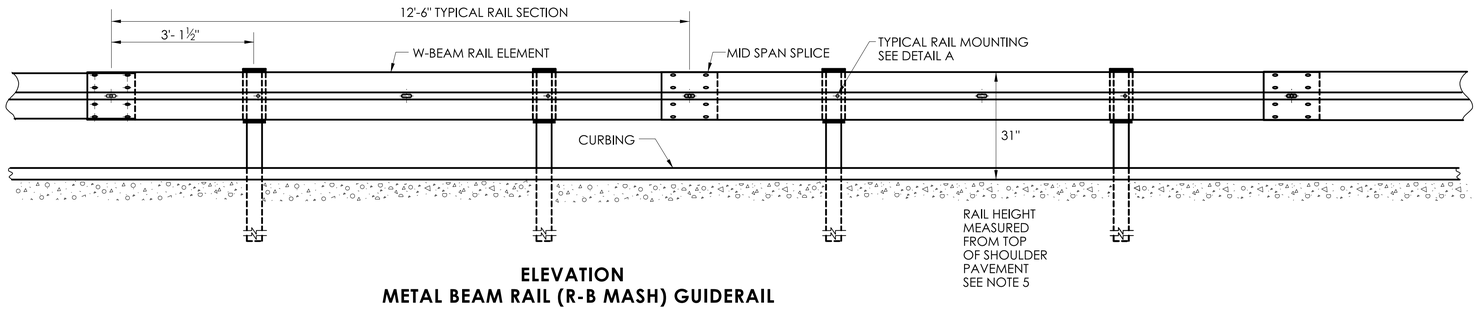

ELEVATION
METAL BEAM RAIL (R-B MASH) GUIDERAIL

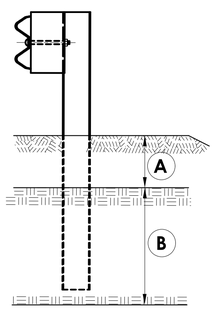

CONDITION 1 :
IF SOIL DEPTH IS ≤ 18" DEEP (A) DRILL 20" DIA. HOLE 24" INTO LEDGE. (B)

CONDITION 2 :
IF SOIL DEPTH IS > 18" DEEP (A) DRILL 8" DIA. HOLE 12" INTO LEDGE (B) OR TO THE DEPTH OF FULL EMBEDMENT WHICHEVER IS LESS.

ELEVATION

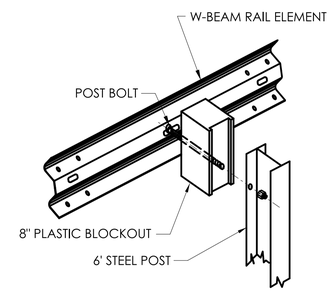

DETAIL A
RAIL MOUNTING

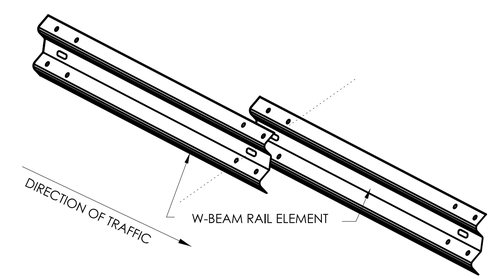

LAP W-BEAM RAIL SECTIONS
NOTE: EIGHT (8) SPLICE BOLTS PER JOINT

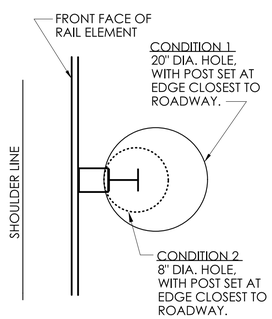

PLAN

GUIDERAIL POSTS IN ROCK

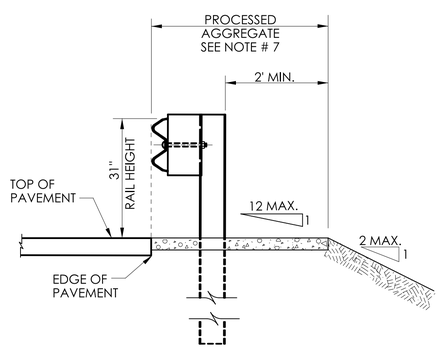

SECTION A -

NO CURB APPLICATION

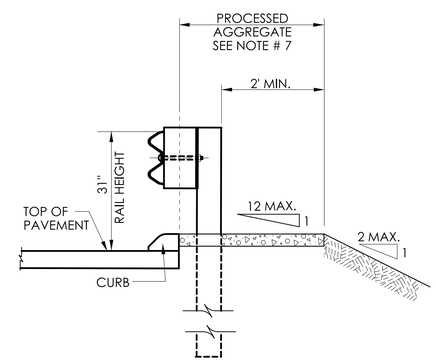

SECTION A -

CURB APPLICATION

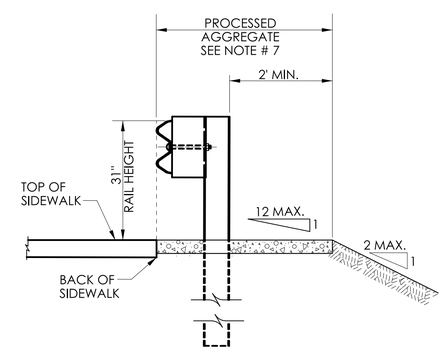

SECTION A -

SIDEWALK APPLICATION

	NOT TO SCALE	SIGNATURE BLOCK: OFFICE OF ENGINEERING 2800 BERLIN TURNPIKE NEWINGTON, CT 06111	SUBMITTED BY: Digitally signed by Leo Fontaine, P.E. Date: 2024.12.19 15:04:27-05'00'	APPROVED BY: Digitally signed by Michael N. Calabrese, P.E. Date: 2025.01.29 12:32:15-05'00'	CTDOT CONNECTICUT DEPARTMENT OF TRANSPORTATION	CTDOT STANDARD SHEET	STANDARD SHEET TITLE: METAL BEAM RAIL (R-B MASH) GUIDERAIL	STANDARD SHEET NO.: HW-910_21

PLOTTED DATE: 10/23/2024