GENERAL NOTES:

1. J-HOOK BOLTS MAY BE SUBSTITUTED FOR BOTTOM PLATE ANCHORAGE IN CONCRETE END ANCHORS USING THE SAME SIZE, STRENGTH, AND LENGTH AS NOTED ON THE PLANS.
2. INSTALLATION OF RADII DIFFERENT THAN WHAT IS SHOWN IN DETAIL "C" FOR R-B END ANCHORAGE TYPE II MUST BE APPROVED BY THE ENGINEER.

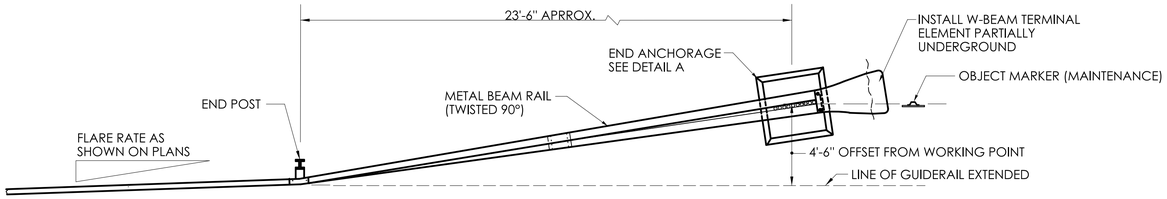

PLAN

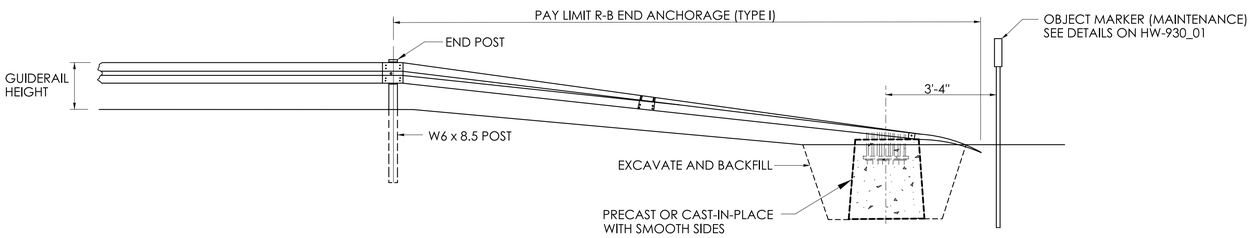

ELEVATION

R-B END ANCHORAGE TYPE I

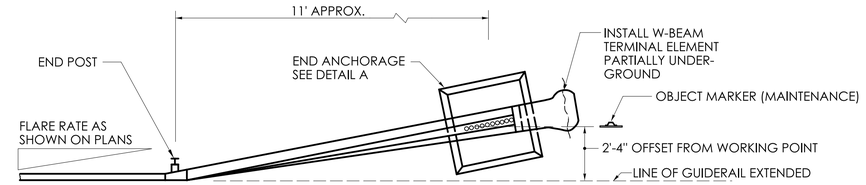

PLAN

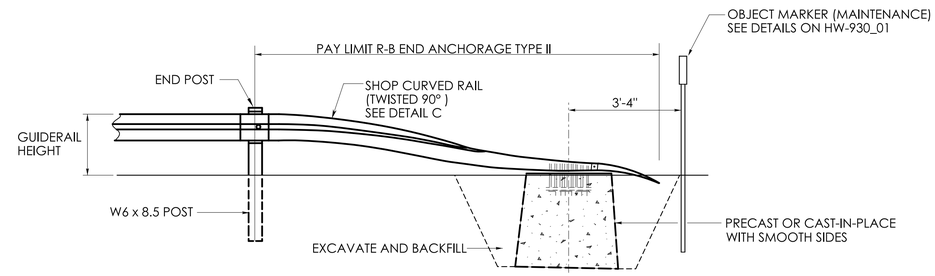

ELEVATION
R-B END ANCHORAGE TYPE II

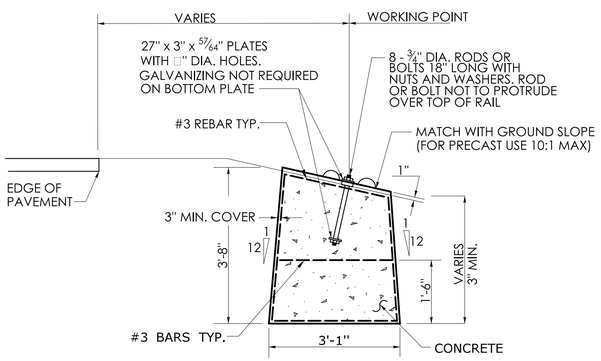

ELEVATION

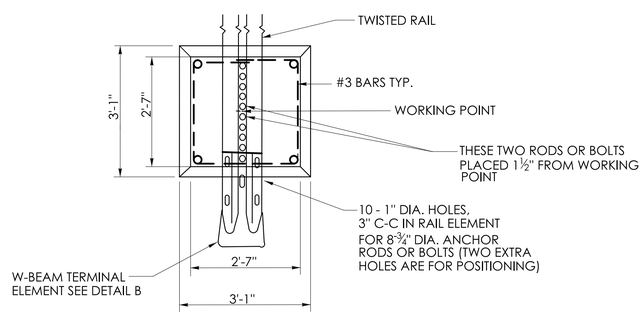

PLAN

DETAIL A
ROADSIDE CONCRETE END ANCHOR
SEE NOTE 2

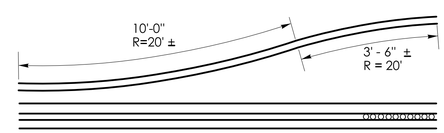

DETAIL C
SHOP CURVED RAIL
SEE NOTE 2

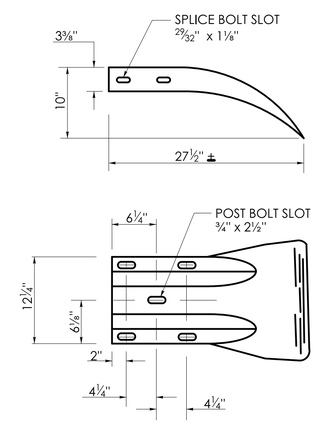

DETAIL B
W-BEAM TERMINAL ELEMENT

	NOT TO SCALE	SIGNATURE BLOCK: OFFICE OF ENGINEERING 2800 BERLIN TURNPIKE NEWINGTON, CT 06111	SUBMITTED BY: Digitally signed by Leo Fontaine, P.E. Date: 2024.12.19 15:05:33-05'00'	APPROVED BY: Digitally signed by Michael N. Calabrese, P.E. Date: 2025.01.29 12:39:13-05'00'	CTDOT CONNECTICUT DEPARTMENT OF TRANSPORTATION	CTDOT STANDARD SHEET	STANDARD SHEET TITLE: R-B END ANCHORAGE TYPE I AND II	STANDARD SHEET NO.: HW-911_01

PLOTTED DATE: 11/25/2024