1125-273132 **ADDENDUM NO. 1**

CDM Smith Inc.
3 Davol Square
Building A, Suite A-425
Providence, RI 02903

Date Issued: December 12, 2025

TO: ALL BID DOCUMENT RECIPIENTS OF RECORD

RE: INVITATION FOR BIDS
TOWN OF YARMOUTH, MASSACHUSETTS
CONTRACT DOCUMENTS FOR
WASTEWATER COLLECTION AND WATER RESOURCE RECOVERY FACILITIES
PHASE 1 - CONTRACT NO. 6, PROJECT NO. CWSRF-8349/6

Receipt of Bids: December 18, 2025 at 2:00 PM

ADDENDUM NO. 1

Bid Document Recipients on this Project are hereby notified that this Addendum shall be attached to and made part of the above-named Bid Documents as provided in the "Instructions to Bidders" for the above-referenced project.

The following items are issued to add to, modify, and clarify the Bid Documents. These items shall have the same full force and effect as the Invitation to Bid, and costs involved shall be included in the prices proposed. Bids, to be submitted on the specified date, shall conform with the additions and revisions included herein.

Bidders shall acknowledge receipt of this Addendum by inserting its number and date on page 004113-1 of the Bid Form. Failure to do so may subject the bidder to disqualification.

CHANGES TO THE SPECIFICATIONS

1. Section 004113 Bid Form

    a. **DELETE** Section 004113, pages 6, 13, 19, 26, 33, and 37 through 42 and **REPLACE** with the attached new pages.

2. Section 005214 Agreement

    a. **DELETE** Section 005214 Agreement in its entirety and **REPLACE** with the attached new Section 005214.

3. Section 012001 Price and Payment

a. Paragraph 1.8A.1., first sentence, **DELETE** the words "Bank run gravel/gravel borrow" and **REPLACE** with the words "Gravel borrow".
b. Paragraph 1.8B.1., first sentence, **DELETE** the words "bank run gravel/gravel borrow" and **REPLACE** with the words "gravel borrow".

4. Section 312000 Earthwork

   a. Paragraph 3.11B.1., **DELETE** the words "bank run gravel" and **REPLACE** with the words "gravel borrow".

5. Section 321216 Asphalt Paving

   a. Paragraph 3.5.A., second sentence, **DELETE** the words "bank run gravel" and **REPLACE** with the words "gravel borrow".

CHANGES TO THE DRAWINGS

1. **Figure No. 1 – Temporary Leach Pit Detail** attached to this addendum to be inserted onto sheet CD-11.
2. **DELETE** Sheet S-2 in its entirety and **REPLACE** with new sheet S-2 included in this addendum.
3. **DELETE** Sheet S-3 in its entirety and **REPLACE** with new sheet S-3 included in this addendum.
4. **DELETE** Sheet S-4 in its entirety and **REPLACE** with new sheet S-4 included in this addendum.

SUBMITTED QUESTIONS AND COMMENTS:

Provided below are responses to questions submitted to date.

1. **QUESTION/COMMENT:** Please clarify if the project is subject to BABA requirements.

   RESPONSE: BABA implementation is not required for this project. American Iron and Steel (AIS) requirements do apply to this project.

END OF ADDENDUM

© 2025 CDM Smith
All Rights Reserved

TOWN OF YARMOUTH, MASSACHUSETTS
WASTEWATER COLLECTION AND WATER RESOURCE RECOVERY FACILITIES
PHASE 1 – CONTRACT NO. 6
PROJECT NO. CWSRF – 8349/6

BASE BID ELIGIBLE WORK (PART A - SEWER)

Item No.	Estimated Quantity	Brief Description of Items With Unit Price Bid in Words	Unit Bid Price in Figures	Amount in Figures
7a	2,100 cu. yds.	Gravel borrow _____ per cubic yard	$_____	$_____
7b	50 cu. yds.	Screened gravel for utility crossings and miscellaneous purposes _____ per cubic yard	$_____	$_____
7c	50 cu. yds.	Common Fill _____ per cubic yard	$_____	$_____
7d	560 cu. yds.	Dense graded crushed stone for pavement base (Route 28) _____ per cubic yard	$_____	$_____
7e	15 cu. yds.	Earth excavation and refill below normal grade _____ per cubic yard	$_____	$_____
8a	300 Tons	Management and disposal of excavated material at <RCS-1 disposal facility _____ per cubic yard	$_____	$_____
8b	2,000 Tons	Management and disposal of excavated material at in-state unlined landfill _____ per cubic yard	$_____	$_____

Subtotal Page 004113-6 $_____

© 2025 CDM Smith
All Rights Reserved

TOWN OF YARMOUTH, MASSACHUSETTS
WASTEWATER COLLECTION AND WATER RESOURCE RECOVERY FACILITIES
PHASE 1 – CONTRACT NO. 6
PROJECT NO. CWSRF – 8349/6

BASE BID INELIGIBLE WORK (PART B - WATER)

Item No.	Estimated Quantity	Brief Description of Items With Unit Price Bid in Words	Unit Bid Price in Figures	Amount in Figures
24b	20 ea. set	Furnish and install 1-in corporation cocks and curb stops with boxes, including excavation and backfill (includes testing taps)		
		_____ each set	$_____	$_____
25a	860 cu. yds.	Gravel borrow for pavement, driveway and sidewalk base		
		_____ per cubic yard	$_____ (Transfer Unit Bid Price from Item 7a)	$_____
25b	20 cu. yds.	Screened gravel		
		_____ per cubic yard	$_____ (Transfer Unit Bid Price from Item 7b)	$_____
25c	40 cu. yds.	Common fill		
		_____ per cubic yard	$_____ (Transfer Unit Bid Price from Item 7c)	$_____
25d	280 cu. yds.	Dense graded crushed stone for pavement base (Route 28)		
		_____ per cubic yard	$_____ (Transfer Unit Bid Price from Item 7d)	$_____
25e	20 cu. yds	Excavation below normal grade including gravel refill		
		_____ per cubic yard	$_____ (Transfer Unit Bid Price from Item 7e)	$_____

Subtotal Page 004113-13 $_____

© 2025 CDM Smith
All Rights Reserved

TOWN OF YARMOUTH, MASSACHUSETTS
WASTEWATER COLLECTION AND WATER RESOURCE RECOVERY FACILITIES
PHASE 1 – CONTRACT NO. 6
PROJECT NO. CWSRF – 8349/6

ADD ALTERNATE NO. 1 ELIGIBLE WORK (PART A - SEWER)

Item No.	Estimated Quantity	Brief Description of Items With Unit Price Bid in Words	Unit Bid Price in Figures	Amount in Figures
32	25 cu. yds.	Test Pits _____ per cubic yard	$_____ (Transfer Unit Bid Price from Item 5)	$_____
33a	10 cu. yds.	Rock and Boulder Excavation Sixty-Five Dollars per cubic yard	$ 65.00	$ 650.00
33b	10 cu. yds.	Additional payment for rock and boulder excavation over the established price _____ per cubic yard	$_____ (Transfer Unit Bid Price from Item 6b)	$_____
34a	1,900 cu. yds.	Gravel borrow _____ per cubic yard	$_____ (Transfer Unit Bid Price from Item 7a)	$_____
34b	25 cu. yds.	Screened gravel for utility crossings and miscellaneous purposes _____ per cubic yard	$_____ (Transfer Unit Bid Price from Item 7b)	$_____
34c	25 cu. yds.	Common Fill _____ per cubic yard	$_____ (Transfer Unit Bid Price from Item 7c)	$_____

Subtotal Page 004113-19 $_____

© 2025 CDM Smith
All Rights Reserved

TOWN OF YARMOUTH, MASSACHUSETTS
WASTEWATER COLLECTION AND WATER RESOURCE RECOVERY FACILITIES
PHASE 1 – CONTRACT NO. 6
PROJECT NO. CWSRF – 8349/6

ADD ALTERNATE NO. 1 INELIGIBLE WORK (PART B - WATER)

Item No.	Estimated Quantity	Brief Description of Items With Unit Price Bid in Words	Unit Bid Price in Figures	Amount in Figures
50a	850 cu. yds.	Gravel borrow for pavement, driveway and sidewalk base _____ per cubic yard	$_____ (Transfer Unit Bid Price from Item 7a)	$_____
50b	50 cu. yds.	Screened gravel _____ per cubic yard	$_____ (Transfer Unit Bid Price from Item 7b)	$_____
50c	40 cu. yds.	Common fill _____ per cubic yard	$_____ (Transfer Unit Bid Price from Item 7c)	$_____
50d	270 cu. yds.	Dense graded crushed stone for pavement base (Route 28) _____ per cubic yard	$_____ (Transfer Unit Bid Price from Item 7d)	$_____
50e	20 cu. yds	Excavation below normal grade including gravel refill _____ per cubic yard	$_____ (Transfer Unit Bid Price from Item 7e)	$_____
51a	100 sq. yds.	Furnish and install initial trench width HMA Binder Course, 4-in thick (Town Roads) _____ per square yard	$_____ (Transfer Unit Bid Price from Item 9a)	$_____

Subtotal Page 004113-26 $_____

© 2025 CDM Smith
All Rights Reserved

TOWN OF YARMOUTH, MASSACHUSETTS
WASTEWATER COLLECTION AND WATER RESOURCE RECOVERY FACILITIES
PHASE 1 – CONTRACT NO. 6
PROJECT NO. CWSRF – 8349/6

ADD ALTERNATE NO. 2 ELIGIBLE WORK (PART A - SEWER)

Item No.	Estimated Quantity	Brief Description of Items With Unit Price Bid in Words	Unit Bid Price in Figures	Amount in Figures
58	10 cu. yds.	Test Pits _____ per cubic yard	$_____ (Transfer Unit Bid Price from Item 5)	$_____
59a	10 cu. yds.	Rock and Boulder Excavation Sixty-Five Dollars per cubic yard	$ 65.00	$ 650.00
59b	10 cu. yds.	Additional payment for rock and boulder excavation over the established price _____ per cubic yard	$_____ (Transfer Unit Bid Price from Item 6b)	$_____
60a	2,900 cu. yds.	Gravel borrow _____ per cubic yard	$_____ (Transfer Unit Bid Price from Item 7a)	$_____
60b	25 cu. yds.	Screened gravel for utility crossings and miscellaneous purposes _____ per cubic yard	$_____ (Transfer Unit Bid Price from Item 7b)	$_____
60c	25 cu. yds.	Common fill _____ per cubic yard	$_____ (Transfer Unit Bid Price from Item 7c)	$_____

Subtotal Page 004113-33 $_____

© 2025 CDM Smith
All Rights Reserved

TOWN OF YARMOUTH, MASSACHUSETTS
WASTEWATER COLLECTION AND WATER RESOURCE RECOVERY FACILITIES
PHASE 1 – CONTRACT NO. 6
PROJECT NO. CWSRF – 8349/6

ADD ALTERNATE NO. 2 INELIGIBLE WORK (PART B – WATER)

Item No.	Estimated Quantity	Brief Description of Items With Unit Price Bid in Words	Unit Bid Price in Figures	Amount in Figures
68a	750 lin. ft	Furnish and install 16-inch cement lined ductile iron water main Class 52, including earth excavation and backfill _____ per linear foot	$_____	$_____
68b	50 lin. ft	Furnish and install 12-inch cement lined ductile iron water main Class 52, including earth excavation and backfill _____ per linear foot	$_____ (Transfer Unit Bid Price from Item 18a)	$_____
68c	250 lin. ft	Furnish and install 8-inch cement lined ductile iron water main Class 52, including earth excavation and backfill _____ per linear foot	$_____ (Transfer Unit Bid Price from Item 18b)	$_____
68d	90 lin. ft	Furnish and install 6-inch cement lined ductile iron water main Class 52, including earth excavation and backfill _____ per linear foot	$_____ (Transfer Unit Bid Price from Item 18c)	$_____
69a	6,500 lbs.	Furnish and install compact ductile iron pipe fittings, all sizes _____ per pound	$_____ (Transfer Unit Bid Price from Item 19a)	$_____

Subtotal Page 004113-37 $_____

© 2025 CDM Smith
All Rights Reserved

TOWN OF YARMOUTH, MASSACHUSETTS
WASTEWATER COLLECTION AND WATER RESOURCE RECOVERY FACILITIES
PHASE 1 – CONTRACT NO. 6
PROJECT NO. CWSRF – 8349/6

ADD ALTERNATE NO. 2 INELIGIBLE WORK (PART B – WATER)

Item No.	Estimated Quantity	Brief Description of Items With Unit Price Bid in Words	Unit Bid Price in Figures	Amount in Figures
69b	3 each	Furnish and install 16-in couplings		
		_____ each	$_____ (Transfer Unit Bid Price from Item 19b)	$_____
69c	4 each	Furnish and install 12-in couplings		
		_____ each	$_____ (Transfer Unit Bid Price from Item 19c)	$_____
69d	3 each	Furnish and install 8-in couplings		
		_____ each	$_____ (Transfer Unit Bid Price from Item 19d)	$_____
69e	2 each	Furnish and install 6-in couplings		
		_____ each	$_____ (Transfer Unit Bid Price from Item 19e)	$_____
70a	5 each	Furnish and install 16-in gate valves and boxes		
		_____ each	$_____	$_____
70b	1 each	Furnish and install 12-in gate valves and boxes		
		_____ each	$_____ (Transfer Unit Bid Price from Item 20a)	$_____

Subtotal Page 004113-38 $_____

© 2025 CDM Smith
All Rights Reserved

TOWN OF YARMOUTH, MASSACHUSETTS
WASTEWATER COLLECTION AND WATER RESOURCE RECOVERY FACILITIES
PHASE 1 – CONTRACT NO. 6
PROJECT NO. CWSRF – 8349/6

ADD ALTERNATE NO. 2 INELIGIBLE WORK (PART B – WATER)

Item No.	Estimated Quantity	Brief Description of Items With Unit Price Bid in Words	Unit Bid Price in Figures	Amount in Figures
70c	4 each	Furnish and install 8-in gate valves and boxes		
		_____ each	$_____ (Transfer Unit Bid Price from Item 20b)	$_____
70d	1 each	Furnish and install 6-in gate valves and boxes		
		_____ each	$_____ (Transfer Unit Bid Price from Item 20c)	$_____
71a	1 each	Furnish and install 16” x 6” tapping sleeves and valves		
		_____ each	$_____	$_____
71b	1 each	Furnish and install 12” x 8” tapping sleeves and valves		
		_____ each	$_____ (Transfer Unit Bid Price from Item 21a)	$_____
71c	1 each	Furnish and install 12” and 16” insertion valve		
		_____ each	$_____ (Transfer Unit Bid Price from Item 21d)	$_____
72	5 each	Furnish and install new hydrant assemblies including all associated fittings, connecting pipe, gate valves, thrust restraint and joint restraint as necessary		
		_____ each	$_____ (Transfer Unit Bid Price from Item 22a)	$_____

Subtotal Page 004113-39 $_____

© 2025 CDM Smith
All Rights Reserved

TOWN OF YARMOUTH, MASSACHUSETTS
WASTEWATER COLLECTION AND WATER RESOURCE RECOVERY FACILITIES
PHASE 1 – CONTRACT NO. 6
PROJECT NO. CWSRF – 8349/6

ADD ALTERNATE NO. 2 INELIGIBLE WORK (PART B – WATER)

Item No.	Estimated Quantity	Brief Description of Items With Unit Price Bid in Words	Unit Bid Price in Figures	Amount in Figures
73a	80 lin. ft	Furnish and install 2-in PVC service tubing including earth excavation and backfill		
		_____ per linear foot	$_____ (Transfer Unit Bid Price from Item 23a)	$_____
73b	1,150 lin. ft	Furnish and install 1-in PVC service tubing including earth excavation and backfill		
		_____ per linear foot	$_____ (Transfer Unit Bid Price from Item 23b)	$_____
74a	4 ea. set	Furnish and install 2-in corporation cocks and curb stops with boxes, including excavation and backfill (includes testing taps)		
		_____ each set	$_____ (Transfer Unit Bid Price from Item 24a)	$_____
74b	35 ea. set	Furnish and install 1-in corporation cocks and curb stops with boxes, including excavation and backfill (includes testing taps)		
		_____ each set	$_____ (Transfer Unit Bid Price from Item 24b)	$_____
75a	2,100 cu. yds.	Gravel borrow for pavement, driveway and sidewalk base		
		_____ per cubic yard	$_____ (Transfer Unit Bid Price from Item 7a)	$_____

Subtotal Page 004113-40 $_____

© 2025 CDM Smith
All Rights Reserved

TOWN OF YARMOUTH, MASSACHUSETTS
WASTEWATER COLLECTION AND WATER RESOURCE RECOVERY FACILITIES
PHASE 1 – CONTRACT NO. 6
PROJECT NO. CWSRF – 8349/6

ADD ALTERNATE NO. 2 INELIGIBLE WORK (PART B – WATER)

Item No.	Estimated Quantity	Brief Description of Items With Unit Price Bid in Words	Unit Bid Price in Figures	Amount in Figures
75b	30 cu. yds.	Screened gravel		
		_____ per cubic yard	$_____ (Transfer Unit Bid Price from Item 7b)	$_____
75c	20 cu. yds.	Common fill		
		_____ per cubic yard	$_____ (Transfer Unit Bid Price from Item 7c)	$_____
75d	670 cu. yds.	Dense graded crushed stone for pavement base (Route 28)		
		_____ per cubic yard	$_____ (Transfer Unit Bid Price from Item 7d)	$_____
75e	10 cu. yds	Excavation below normal grade including gravel refill		
		_____ per cubic yard	$_____ (Transfer Unit Bid Price from Item 7e)	$_____
76a	40 sq. yds.	Furnish and install initial trench width HMA Binder Course, 4-in thick (Town Roads)		
		_____ per square yard	$_____ (Transfer Unit Bid Price from Item 9a)	$_____
76b	1,350 sq. yds.	Furnish and install initial trench width plus 1-foot HMA, 3-in thick (Route 28)		
		_____ per square yard	$_____ (Transfer Unit Bid Price from Item 9b)	$_____

Subtotal Page 004113-41 $_____

© 2025 CDM Smith
All Rights Reserved

TOWN OF YARMOUTH, MASSACHUSETTS
WASTEWATER COLLECTION AND WATER RESOURCE RECOVERY FACILITIES
PHASE 1 – CONTRACT NO. 6
PROJECT NO. CWSRF – 8349/6

ADD ALTERNATE NO. 2 INELIGIBLE WORK (PART B – WATER)

Item No.	Estimated Quantity	Brief Description of Items With Unit Price Bid in Words	Unit Bid Price in Figures	Amount in Figures
76c	1,600 sq. yds.	Furnish and install permanent trench width plus 2-feet HMA, 10-in thick (Route 28)		
		_____ per square yard	$_____ (Transfer Unit Bid Price from Item 9c)	$_____
77	10 cu. yds	Miscellaneous concrete		
		_____ per cubic yard	$_____ (Transfer Unit Bid Price from Item 13)	$_____
78	10 cu. yds	Test pits		
		_____ per cubic yard	$_____ (Transfer Unit Bid Price from Item 5)	$_____

Subtotal Page 004113-42 $_____

© 2025 CDM Smith
All Rights Reserved

TOWN OF YARMOUTH, MASSACHUSETTS
WASTEWATER COLLECTION AND WATER RESOURCE RECOVERY FACILITIES
PHASE 1 – CONTRACT NO. 6
PROJECT NO. CWSRF – 8349/6

AGREEMENT

THIS AGREEMENT made as of the _____ day of _____ in the year 2025 by and between the Town of Yarmouth, Massachusetts acting through its Board of Selectmen hereinafter called OWNER and _____
with legal address and principal place of business at _____
_____ hereinafter called CONTRACTOR. OWNER and CONTRACTOR in consideration of the mutual covenants hereinafter set forth, agree as follows:

ARTICLE 1. WORK.

1.1 CONTRACTOR shall perform the Work as specified or indicated in the Contract Documents. The Work is as described in SECTION 01010.

ARTICLE 2. ENGINEER.

2.1 The Project has been designed by CDM Smith, 3 Davol Square, Building A, Suite A425, Providence, RI 02903 who will act as ENGINEER in connection with completion of the Work in accordance with the Contract Documents.

ARTICLE 3. CONTRACT TIME.

3.1 The Contract Time shall be 900 Calendar Days commencing twenty days following the Effective Date of this Agreement.

3.2 CONTRACTOR agrees that the Work shall be prosecuted regularly, diligently and uninterruptedly and at such rate of progress as will insure full completion thereof within the Contract Time stated above. It is expressly understood and agreed, by and between CONTRACTOR and OWNER that the Contract Time is reasonable for the completion of the Work, taking into consideration the average climatic range and usual industrial conditions prevailing in this locality.

ARTICLE 4. CONTRACT PRICE.

4.1 OWNER will pay CONTRACTOR for performance of the Work in accordance with the Contract Documents in current funds at the Contract Price agreed upon in the CONTRACTOR's Bid Form attached to this Agreement.

4.2 As per MassDEP's Policy Memorandum No.10 - the agreed upon DIRECT LABOR MARKUP (percentage) for Change Orders on this project shall be ___ percent.

4.3 All contracts for water and sewer projects awarded as a result of a proposal or invitation for bids under MGL Chapter 30 section 39M shall include a price adjustment clause for fuel, both diesel and gasoline; liquid asphalt; and portland cement contained in cast-in-place concrete. A base price for each material shall be set by the awarding authority or agency and shall be included in the bid documents at the time the project is advertised. The awarding authority or agency shall also identify in the bid documents the price index to be used for each material. The price adjustment clause shall provide for a contract

adjustment to be made on a monthly basis when the monthly cost change exceeds plus or minus five percent.

4.4 Notwithstanding anything in the Contract Documents to the contrary, any and all payments which the Town is required to make under this Contract shall be subject to appropriation or other availability of funds as certified by the Town Accountant. In the absence of appropriation or availability as certified herein, this Contract shall be immediately terminated without liability for damages, penalties or other charges to the Town. In the event this is a multi-year contract, this Contract shall be subject to annual appropriation and in the event funds are not so appropriated, this Contract shall terminate immediately without liability for damages, penalties or charges to the Town.

ARTICLE 5. APPLICATIONS FOR PAYMENT

5.1 CONTRACTOR shall submit Applications for Payment in accordance with Article 15 of the Conditions of the Contract. Applications for Payment will be processed by ENGINEER as provided in the Conditions of the Contract.

ARTICLE 6. PROGRESS AND FINAL PAYMENTS

6.1 OWNER will make progress payments on account of the Contract Price on the basis of CONTRACTOR's Applications for Payment as recommended by ENGINEER, monthly during construction as provided below. All progress payments will be on the basis of the progress of the Work measured by the schedule of values provided for in Paragraph 15.01 of the Conditions of the Contract.

6.2 OWNER will make progress and final payments as provided in Article 15 of the Conditions of the Contract and in accordance with the applicable Massachusetts General Law.

ARTICLE 7. LIQUIDATED DAMAGES

7.1 OWNER and CONTRACTOR recognize that time is of the essence of this Agreement and that OWNER will suffer financial loss if the Work is not completed within the Contract Time specified in Article 3 above, plus any extensions thereof allowed in accordance with Article 11 of the General Conditions. They also recognize the delays, expense and difficulties involved in proving, in a legal or arbitration proceeding, the actual loss suffered by OWNER if the Work is not completed on time. Accordingly, instead of requiring any such proof OWNER and CONTRACTOR agree that as liquidated damages for delay (but not as a penalty) CONTRACTOR shall pay OWNER $2,000 per day for each calendar day of delay until the Work is complete.

7.2 Provided, that CONTRACTOR shall not be charged with liquidated damages or any excess cost when the delay in completion of the Work is for reasons included in Paragraph 4.05 of the General Conditions.

7.3 Provided, further, that CONTRACTOR shall furnish OWNER the required notification of such delays in accordance with Paragraph 11.06 of the General Conditions.

ARTICLE 8. ASSURANCE

8.1 CONTRACTOR has familiarized himself with the nature and extent of the Contract Documents, Work, locality, and with all local conditions and Federal, State and local laws, ordinances, rules and regulations that in any manner may affect cost, progress or performance of the Work.

8.2 CONTRACTOR has studied carefully all reports of investigations and tests of subsurface and latent physical conditions at the site or otherwise affecting cost, progress or performance of the Work which were relied upon by ENGINEER in the preparation of the Drawings and Specifications and which have been identified in Article 5 of the Supplementary Conditions.

8.3 CONTRACTOR has made or caused to be made examinations, investigations and tests and studies of such reports and related data [in addition to those referred to in the above paragraph] as CONTRACTOR deems necessary for the performance of the Work at the Contract Price within the Contract Time and in accordance with the other terms and conditions of the Contract Documents; and no additional examinations, investigations, tests, reports or similar data are or will be required for such purposes.

8.4 CONTRACTOR has correlated the results of all such observations, examinations, investigations, tests, reports and data with the terms and conditions of the Contract Documents.

8.5 CONTRACTOR has given ENGINEER written notice of any conflict, error or discrepancy that CONTRACTOR has discovered in the Contract Documents and the written resolution thereof by ENGINEER is acceptable to CONTRACTOR.

8.6 CONTRACTOR agrees that the Contract Documents are sufficient in scope and detail to indicate and convey understanding of all terms and conditions for performance of the Work.

ARTICLE 9. CONTRACT DOCUMENTS.

9.1 The Contract Documents which comprise the Contract between OWNER and CONTRACTOR are attached hereto and made a part hereof and consist of the following:

9.1.1 Invitation To Bid.

9.1.2 Instructions To Bidders.

9.1.3 Bid Form.

9.1.4 This Agreement.

9.1.5 Performance Bond, EJCDC Document C-610, 2013 edition, Payment Bond, EJCDC Document C-615, 2013 edition, and other required Bonds.

9.1.6 General Conditions, EJCDC Document No. C-700, 2013 edition.

9.1.7 Supplementary Conditions Parts I and II.

9.1.8 Specifications (as listed in Table of Contents).

9.1.9 Drawings as listed in the List of Drawings and dated November 2025.

9.1.10 Addenda numbers _____ to _____, inclusive.

9.1.11 Any modification, including Change Orders, duly delivered after execution of Agreement.

ARTICLE 10. MISCELLANEOUS

10.1 Terms used in this Agreement which are defined in Article 1 of the Conditions of the Contract shall have the meanings assigned in the Conditions of the Contract.

10.2 Neither OWNER nor CONTRACTOR shall, without the prior written consent of the other, assign or sublet in whole or in part any interest under any of the Contract Documents; and, specifically but without limitation, CONTRACTOR shall not assign any monies due or to become due without the prior written consent of OWNER. In case CONTRACTOR assigns all or any part of any monies due or to become due under this Contract, the instrument of assignment shall contain a clause substantially to the effect that it is agreed that the right of the assignee in and to any monies due or to become due to CONTRACTOR shall be subject to prior claims of all persons, firms and corporations for services rendered or materials supplied for the performance of the Work called for in this Contract.

10.3 OWNER and CONTRACTOR each bind themselves, their partners, successors, assigns and legal representatives in respect to all covenants, agreements and obligations contained in the Contract Documents.

10.4 The Contract Documents constitute the entire agreement between OWNER and CONTRACTOR and may only be altered, amended or repealed by a Modification.

ARTICLE 11. MASSACHUSETTS EQUAL OPPORTUNITY REQUIREMENTS

11.1 Procurement Considerations - Six Good Faith Efforts. 40 CFR, Part 33, Subpart C: Pursuant to 40 CFR Section 33.301, the sub-recipient agrees to make good faith efforts whenever procuring construction, equipment, services, and supplies under an EPA financial assistance agreement, and to require that sub-recipients, loan recipients, and prime contractors also comply. Records documenting compliance with the six good faith efforts shall be retained. The specific six good faith efforts can be found at: 40 CFR Section 33.301 (a)-(f).

11.2 Anti-Discrimination Requirements

During the performance of this Contract, the Contractor agrees as follows:

1. The contractor will comply with the (a) the Civil Rights Act of 1964, 42 USC s.2000(1) et seq., as amended, Section 13 of the Federal Water Pollution Control Act (FWPCA) of 1972; Section 504 of the Rehabilitation Act of 1973, the Age Discrimination Act of 1975, and (b) will also comply with Executive Order 592 and the Mass General Laws c 151B, §4.1.
2. The contractor will, in all solicitations or advancements for employees placed by or on behalf of the contractor, state that all qualified applicants will receive consideration for employment consistent with Executive Order 592 and the Mass General Laws c 151B, §4.1.
3. The contractor will send to each labor union or representative of workers with which he has a collective bargaining agreement or other contract or understanding, a notice, to be provided by the agency contracting officer, advising the labor union or workers' representative of the contractor's commitments under Massachusetts Executive Order No. 592 and Mass General Laws c 151B, §4.1, and shall post copies of the notice in conspicuous places available to employees and applicants for employment.
4. The contractor will comply with all provisions of Massachusetts Executive Order No. 592 and Mass General Laws c 151B, §4.1 and of the rules, regulations, and relevant orders.
5. The contractor will furnish all information and reports required by Massachusetts Executive Order No. 592 and Mass General Laws c 151B, §4.1, and by the rules, regulations, and orders,

pursuant thereto, and will permit access to his books, records, and accounts by the contracting agency for purposes of investigation to ascertain compliance with such rules, regulations, and orders.

6. In the event of the contractor's noncompliance with the nondiscrimination clauses of this contract or with any of such rules, regulations, or orders, this contract may be canceled, terminated, or suspended in whole or in part and the contractor may be declared ineligible for further Government contracts in accordance with procedures authorized in Executive Order No. 592 and Mass General Laws c 151B, §4.1 and such other sanctions may be imposed and remedies invoked as by rule, regulation, or as otherwise provided by law.
7. The contractor will include the provisions of paragraphs (1) through (7) in every subcontract or purchase order unless exempted by rules or regulations, so that such provisions will be binding upon each subcontractor or vendor. The contractor will take such action with respect to any subcontract or purchase order as a means of enforcing such provisions.

11.3 The CONTRACTOR shall not participate in or cooperate with an international boycott, as defined in Section 999(b)(3) and (4) of the Internal Revenue Code of 1986, as amended, or engage in conduct declared to be unlawful by Section 2 of Chapter 151E of the Massachusetts General Laws.

ARTICLE 12. AMERICAN IRON AND STEEL (AIS) REQUIREMENTS

12.1 The Contractor acknowledges to and for the benefit of the City/Town of Yarmouth ("Purchaser") and the Commonwealth of Massachusetts (the "State") that it understands the goods and services under this Agreement are being funded with monies made available by the Clean Water State Revolving Fund and/or Drinking Water State Revolving Fund that have statutory requirements commonly known as "American Iron and Steel;" that requires all of the iron and steel products used in the project to be produced in the United States ("American Iron and Steel Requirement") including iron and steel products provided by the Contactor pursuant to this Agreement. The Contractor hereby represents and warrants to and for the benefit of the Purchaser and the State that (a) the Contractor has reviewed and understands the American Iron and Steel Requirement, (b) all of the iron and steel products used in the project will be and/or have been produced in the United States in a manner that complies with the American Iron and Steel Requirement, unless a waiver of the requirement is approved, and (c) the Contractor will provide any further verified information, certification or assurance of compliance with this paragraph, or information necessary to support a waiver of the American Iron and Steel Requirement, as may be requested by the Purchaser or the State. Notwithstanding any other provision of this Agreement, any failure to comply with this paragraph by the Contractor shall permit the Purchaser or State to recover as damages against the Contractor any loss, expense, or cost (including without limitation attorney's fees) incurred by the Purchaser or State resulting from any such failure (including without limitation any impairment or loss of funding, whether in whole or in part, from the State or any damages owed to the State by the Purchaser). While the Contractor has no direct contractual privity with the State, as a lender to the Purchaser for the funding of its project, the Purchaser and the Contractor agree that the State is a third-party beneficiary and neither this paragraph (nor any other provision of this Agreement necessary to give this paragraph force or effect) shall be amended or waived without the prior written consent of the State.

12.2 The Contractor acknowledges to and for the benefit of the City/Town of Yarmouth ("Purchaser") and the Commonwealth of Massachusetts (the "State") that it understands the goods and services under this Agreement are being funded with monies made available by the Clean Water State Revolving Fund and/or Drinking Water State Revolving Fund that have statutory requirements commonly known as "Build America, Buy America Act;"; that requires starting on May 14, 2022, all steel, iron, manufactured products, non-ferrous metals, plastic and polymer-based products (including polyvinylchloride, composite building materials, and polymers used in fiber optic cables), glass (including optic glass), lumber, and

drywall used in infrastructure projects for federal financial assistance programs must be produced in the United States. MassDEP will conduct field verifications to ensure project compliance.

This project is subject to the Build American, Buy America (BABA) requirements. BABA implementation is not required for this project as the project is not receiving federal assistance based on EPA's Build America, Buy America Act Implementation Procedures for EPA Office of Water Federal Financial Assistance Programs Memorandum issued November 3, 2022.

OWNER is a Subrecipient for funding purposes, and as such, required contract provisions are incorporated throughout the Agreement.

The Contractor agrees that it will fully comply with Subpart C of 2 CFR Part 180 and 2 CFR Part 1532, entitled Responsibilities of Participants Regarding Transactions (Doing Business with Other Persons). The Contractor shall not award any subcontracts or purchase any materials from suppliers that appear on the Excluded Parties List System. The Contractor shall include this requirement in each subcontract and require it to be included in all subcontracts regardless of tier. The Contractor shall maintain reasonable records to demonstrate compliance with these requirements.

This Project is subject to the Davis Bacon wage rate requirements. Attention is directed to Appendix G, included in PART II of the Supplementary Conditions for specific terms and conditions.

IN WITNESS WHEREOF, the parties hereto have signed this Agreement in sextuple. Four copies each have been delivered to OWNER and one copy each to CONTRACTOR and ENGINEER. All portions of the Contract Documents have been signed or identified by OWNER and CONTRACTOR or by ENGINEER on their behalf.

© 2025 CDM Smith
All Rights Reserved

FOR THE TOWN OF YARMOUTH

Acknowledged:

_____
Department/Division Head Date

Approved as to Procurement:

_____
Chief Procurement Officer Date

Pursuant to M.G.L. Chapter 44, Section 31c, I certify that an appropriation has been made in the total amount of the contract:

_____
Town Accountant Date

Contract Approval:

_____
Town Administrator Date

FOR THE CONTRACTOR

_____
Name of Company

_____
Authorized Signature Date

_____
Print Name & Title

Note: If CONTRACTOR is a corporation, an affidavit giving the principal the right to sign the Agreement must accompany the executed Agreement.

END OF DOCUMENT 005214

© 2015 CDM SMITH ALL RIGHTS RESERVED.
REUSE OF DOCUMENTS: THESE DOCUMENTS AND DESIGNS PROVIDED BY PROFESSIONAL SERVICE, INCORPORATED HEREIN, ARE THE PROPERTY OF CDM SMITH AND ARE NOT TO BE USED, IN WHOLE OR PART, FOR ANY OTHER PROJECT WITHOUT THE WRITTEN AUTHORIZATION OF CDM SMITH.

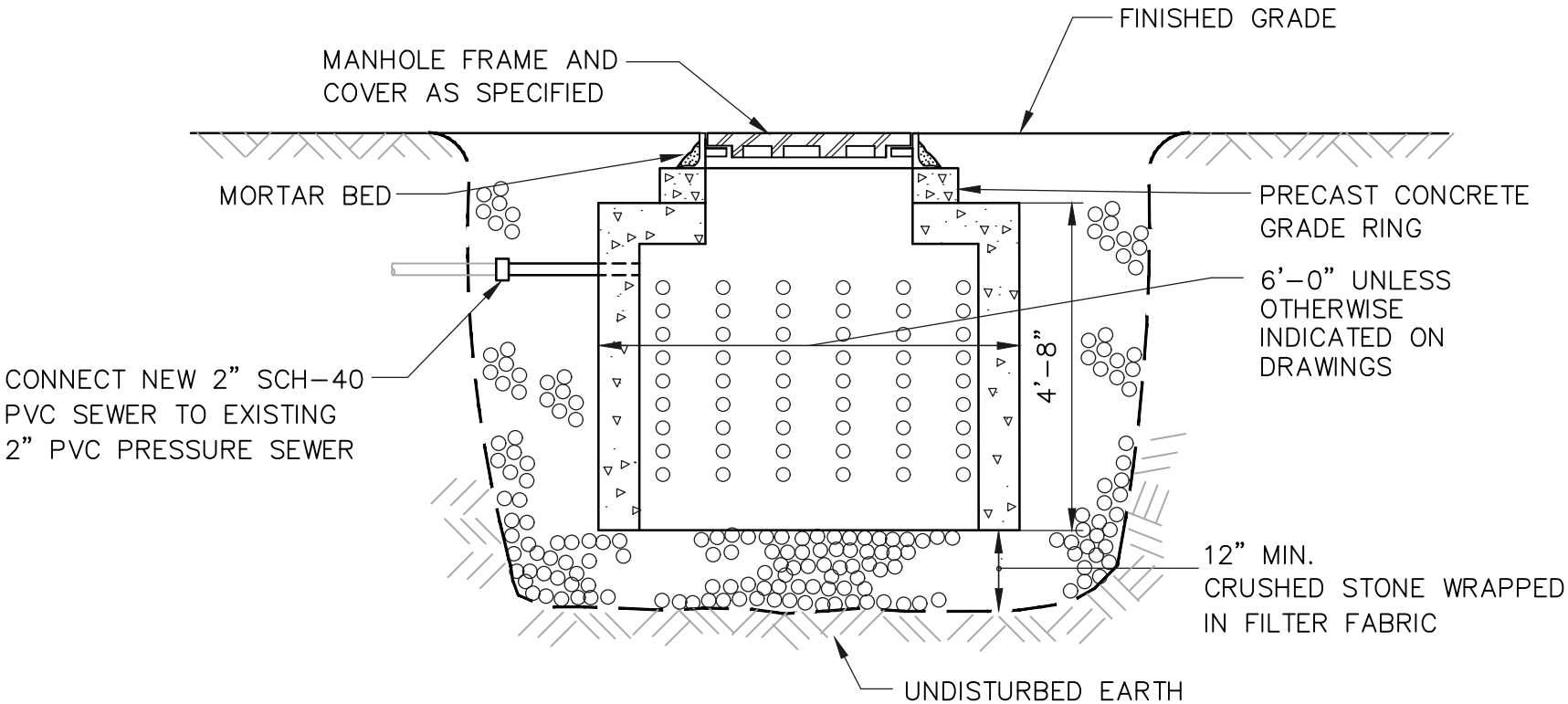

TEMPORARY LEACH PIT DETAIL

NTS

NOTE:

1. LEACH PIT SHALL BE 600 GALLON H-20 BY WIGGIN MEANS PRECAST CO., INC. OR EQUAL.

CDM Smith

TOWN OF YARMOUTH, MASSACHUSETTS
WASTEWATER COLLECTION AND WATER
RESOURCE RECOVERY FACILITIES
PHASE 1 - CONTRACT NO. 6
PROJECT NO. CWSRF 8349/6

Figure No. 1
TEMPORARY LEACH PIT DETAIL
280 ROUTE 28
DECEMBER 2025

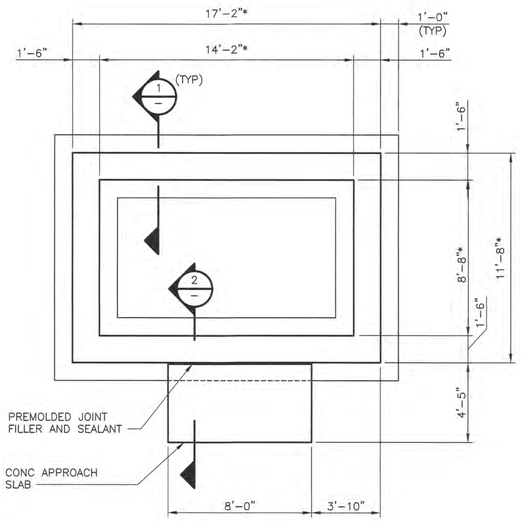

CONTROL BUILDING FOUNDATION

PLAN

1/4" = 1'-0"

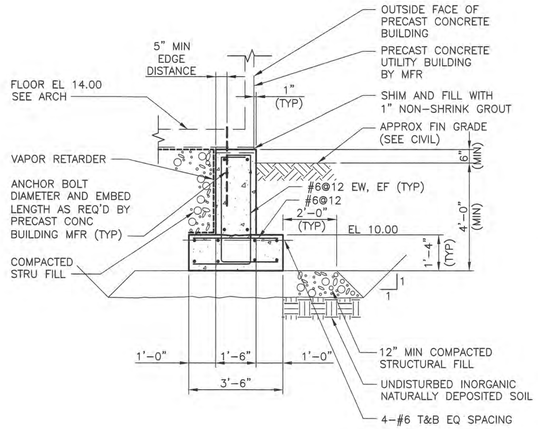

TYPICAL WALL SECTION

SECTION 1 / -

3/8" = 1'-0"

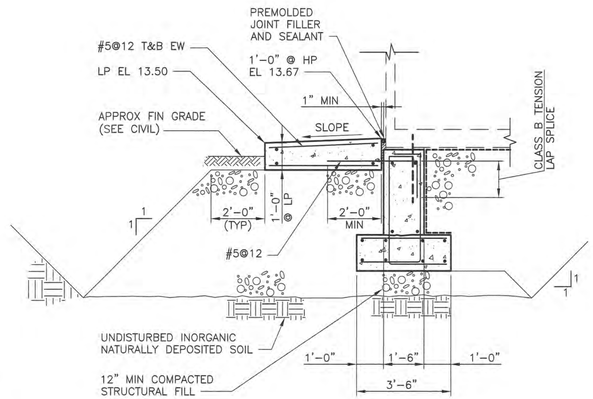

NOTE: SEE SECTION 1 FOR INFORMATION NOT SHOWN.

APPROACH SLAB

SECTION 2 / -

3/8" = 1'-0"

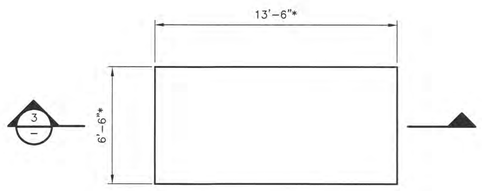

GENERATOR PAD

PLAN

1/4" = 1'-0"

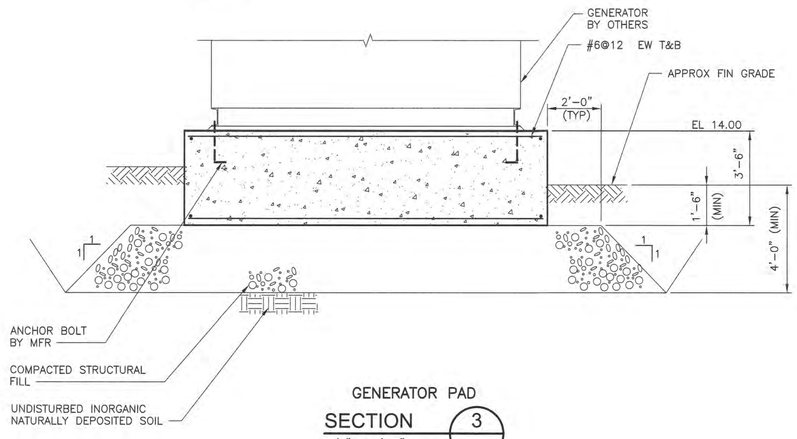

GENERATOR PAD

SECTION 3 / -

3/8" = 1'-0"

GENERAL NOTE:

1. BUILDING CODE: MASSACHUSETTS STATE BUILDING CODE 10TH EDITION.

FOUNDATION NOTES:

1. * INDICATES DIMENSIONS AND/OR INFORMATION TO BE COORDINATED WITH THE MANUFACTURER OF THE APPROVED EQUIPMENT AND/OR BUILDING PRIOR TO FABRICATION AND CONSTRUCTION.
2. PRECAST BUILDING FOUNDATION SHALL NOT BE FABRICATED OR CONSTRUCTED UNTIL APPROVED SUBMITTAL OF THE BUILDING ANCHORAGE LOCATIONS AND FOUNDATION REACTIONS/LOADINGS HAVE BEEN REVIEWED AND ADJUSTMENTS TO THE FOUNDATION DESIGN HAVE BEEN COMPLETED, IF REQUIRED, BY THE ENGINEER.
3. GENERATOR FOUNDATION SHALL NOT BE FABRICATED OR CONSTRUCTED UNTIL THE EQUIPMENT LOADS AND DIMENSIONS HAVE BEEN SUBMITTED AND ADJUSTMENTS TO THE FOUNDATION IF REQUIRED, HAVE BEEN COMPLETED BY THE ENGINEER
4. FOR FOUNDATION LOCATION AND ORIENTATION SEE CIVIL AND HVAC DRAWINGS, UNLESS OTHERWISE INDICATED.

GEOTECHNICAL NOTE:

1. MAXIMUM GROSS ALLOWABLE BEARING PRESSURE 3000 PSF

1/4" = 1'- 0"

2 1 0 2 4

3/8" = 1'- 0"

2 0 2 4

11/20/25

REV. NO.	DATE	DRWN	CHKD	REMARKS

DESIGNED BY: A. AVERIN
DRAWN BY: A. AVERIN
SHEET CHK'D BY: M.K. BIJU
CROSS CHK'D BY: W. HOTZ JR.
APPROVED BY: D.L. HARRIS
DATE: NOVEMBER 2025

CDM Smith
3 Davol Square, Building A, Suite A-425
Providence, RI 02903
Tel: (401) 751-5360

TOWN OF YARMOUTH, MASSACHUSETTS
WASTEWATER COLLECTION AND WATER RESOURCE RECOVERY FACILITIES
PHASE 1 - CONTRACT NO. 6
PROJECT NO. CWSRF 8349/6

PUMPING STATION NO. 2
PLANS AND SECTIONS

PROJECT NO. 1125-273132
FILE NAME: S0012PSPL.dwg
SHEET NO.
S-2

XREFs: [SWPPS04, CDMS_2436] Images: []
Last saved by: AVERINKA Time: 11/5/2025 4:43:06 PM
pw:\\cdmsmith-az02-pw.bentley.com:pw_pl1\1125\273132\04 Design Services NM_30%\04 Structural\10 BIM_CADD\Contract-6 (PS1 and PS2)\S0012PSPL.dwg
© 2025 CDM SMITH ALL RIGHTS RESERVED.
REUSE OF DOCUMENTS: THESE DOCUMENTS AND DESIGNS PROVIDED BY PROFESSIONAL SERVICE, INCORPORATED HEREIN, ARE THE PROPERTY OF CDM SMITH AND ARE NOT TO BE USED, IN WHOLE OR PART, FOR ANY OTHER PROJECT WITHOUT THE WRITTEN AUTHORIZATION OF CDM SMITH.

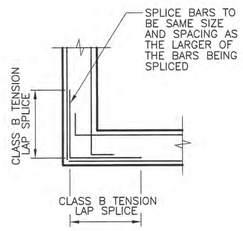

CORNER

WALL REINFORCEMENT DETAIL

DETAIL A
NTS

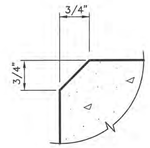

CHAMFER

DETAIL B
NTS

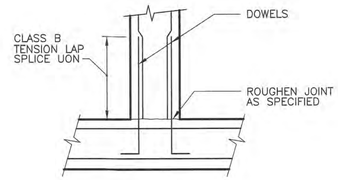

WALL CONSTRUCTION JOINT AT SLAB

DETAIL C
NTS

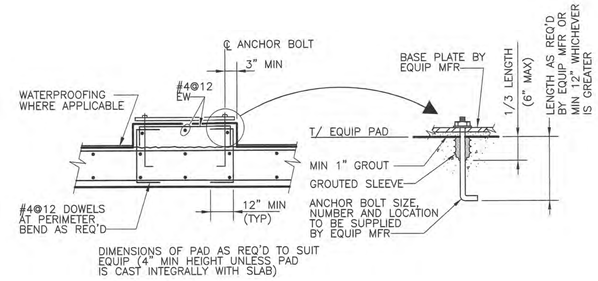

EQUIPMENT PAD

DETAIL D
NTS

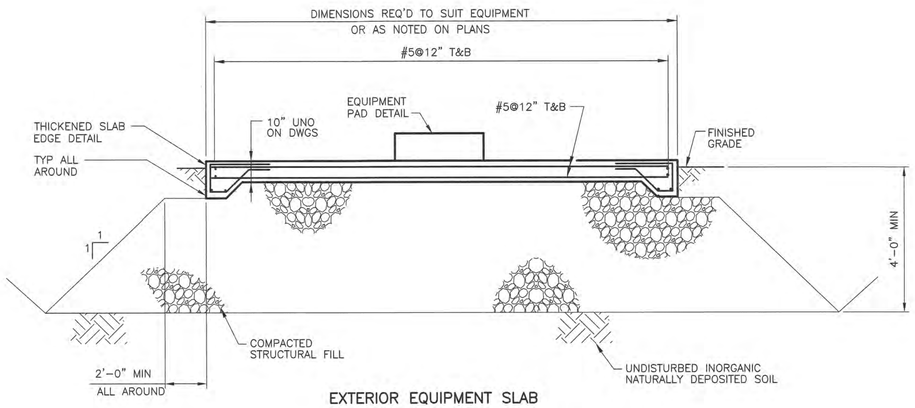

EXTERIOR EQUIPMENT SLAB

DETAIL E
NTS

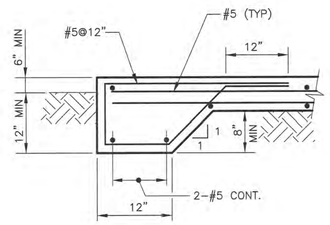

THICKENED SLAB EDGE

DETAIL F
NTS

GENERAL NOTES:

1. ALL STRUCTURAL DRAWINGS SHALL BE USED IN CONJUNCTION WITH THE CIVIL, ARCHITECTURAL, MECHANICAL, ELECTRICAL, HEATING AND VENTILATING, PLUMBING DRAWINGS, SHOP DRAWINGS AND SPECIFICATIONS.
2. SEE CIVIL, ARCHITECTURAL, MECHANICAL, HEATING AND VENTILATING, PLUMBING, AND ELECTRICAL DRAWINGS FOR REGLETS, PIPE SLEEVES, CONDUITS OR OTHER ITEMS TO BE EMBEDDED OR PASSED THROUGH THE CONCRETE.
3. WHEN BACKFILLING AROUND STRUCTURES, BRING UP BACKFILL UNIFORMLY AROUND STRUCTURE UNLESS INDICATED OTHERWISE. CONTROL BACKFILL LEVELS AROUND THE ENTIRE PERIMETER OF THE STRUCTURE SUCH THAT THE GRADE DIFFERENTIAL DOES NOT EXCEED 1'-6".

CAST IN PLACE CONCRETE NOTES:

1. REINFORCED CONCRETE SHALL COMPLY WITH ACI 318.
2. MINIMUM CONCRETE STRENGTH AT 28 DAYS:
   STRUCTURAL CONCRETE f'c = 4000 psi
   ELECTRICAL RACEWAY ENCASEMENT f'c = 2500 psi
3. REINFORCING STEEL SHALL BE NEW STEEL CONFORMING TO ASTM SPECIFICATION A615 GRADE 60.
4. REINFORCING STEEL FABRICATION SHALL BE IN COMPLIANCE WITH THE CRSI MANUAL OF STANDARD PRACTICE.
5. DETERMINE CLEAR CONCRETE COVER BASED ON EXPOSURE TO THE ENVIRONMENT. REINFORCING STEEL SHALL HAVE THE FOLLOWING CLEAR CONCRETE COVER UNLESS OTHERWISE NOTED:

   CONCRETE CAST AGAINST AND PERMANENTLY EXPOSED TO EARTH: 3 IN.
   CONCRETE SURFACES IN CONTACT WITH SOIL, WATER, OR EXPOSED TO WEATHER:

   WALLS AND TOP AND BOTTOM OF SLABS: 2 IN.
6. SPLICED BARS SHALL HAVE A MINIMUM LAP OF CLASS B TENSION LAP SPLICE UNLESS OTHERWISE NOTED.
7. CONSTRUCTION JOINTS SHALL NOT BE PLACED AT LOCATIONS OTHER THAN THOSE SHOWN ON THE DRAWINGS WITHOUT THE PRIOR WRITTEN APPROVAL OF THE ENGINEER.
8. SIZE AND LOCATION OF EQUIPMENT PADS AND ANCHOR BOLTS SHALL BE AS REQUIRED BY THE EQUIPMENT MANUFACTURER.
9. ALL EXPOSED CORNERS OF CONCRETE TO HAVE 3/4" MINIMUM CHAMFER UNLESS OTHERWISE NOTED.
10. REINFORCING BARS TO EXTEND 12 BAR DIAMETERS BUT NOT LESS THAN 12" BEYOND BEND UNLESS OTHERWISE NOTED.

CLASS B TENSION LAP SPLICE LENGTHS IN WALLS AND SLABS (INCHES)

BAR SIZE	BLACK STEEL f'c=4000 psi	
	TOP BARS	OTHER BARS
3	16	16
4	20	16
5	29	23
6	40	31
7	65	50
7*	43	33
8	81	62
8*	49	37
9*	60	46
10*	74	57

TENSION DEVELOPMENT LENGTHS IN WALLS AND SLABS (INCHES)

BAR SIZE	BLACK STEEL f'c=4000 psi	
	TOP BARS	OTHER BARS
3	12	12
4	15	12
5	23	17
6	31	24
7	50	38
7*	33	25
8	62	48
8*	37	29
9*	46	36
10*	57	44

NOTES:

1. MINIMUM BAR SPACING= 6" INCHES ON CENTER.
2. MINIMUM CONCRETE COVER = 1", EXCEPT AS NOTED BY * .
   * INDICATES MINIMUM CONCRETE COVER= 2".
3. A TOP BAR IS A HORIZONTAL BAR WHERE MORE THAN 12" OF FRESH CONCRETE IS CAST DIRECTLY BELOW THE BAR. WHERE HORIZONTAL WALL REINFORCEMENT IS UNIFORMLY SPACED IN A VERTICAL PLANE AT 12" MAXIMUM SPACING, LENGTHS MAY BE AS FOR "OTHER BARS".

LAP SPLICE AND DEVELOPMENT LENGTHS
BLACK REINFORCING STEEL

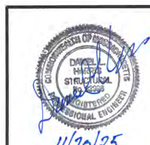

REV. NO.	DATE	DRWN	CHKD	REMARKS

DESIGNED BY: A. AVERIN
DRAWN BY: A. AVERIN
SHEET CHK'D BY: M.K. BIJU
CROSS CHK'D BY: W. HOTZ JR.
APPROVED BY: D.L. HARRIS
DATE: NOVEMBER 2025

CDM Smith
3 Davol Square, Building A, Suite A-425
Providence, RI 02903
Tel: (401) 751-5360

TOWN OF YARMOUTH, MASSACHUSETTS
WASTEWATER COLLECTION AND WATER RESOURCE RECOVERY FACILITIES
PHASE 1 - CONTRACT NO. 6
PROJECT NO. CWSRF 8349/6

GENERAL NOTES AND STANDARD DETAILS

PROJECT NO. 1125-273132
FILE NAME: S003STDT.dwg
SHEET NO.
S-3

XREFs: [CDMS_2436] Images: []
Last saved by: AVERINKA Time: 8/12/2024 10:19:38 AM
pw:\\cdmsmith-a202-pw.bentley.com:pw_pf1\1125\273132\04 Design Services NM_30%\04 Structural\10 BIM_CADD\Contract-6 (PS1 and PS2)\S003STDT.dwg
© 2025 CDM SMITH ALL RIGHTS RESERVED.
REUSE OF DOCUMENTS: THESE DOCUMENTS AND DESIGNS PROVIDED BY PROFESSIONAL SERVICE, INCORPORATED HEREIN, ARE THE PROPERTY OF CDM SMITH AND ARE NOT TO BE USED, IN WHOLE OR PART, FOR ANY OTHER PROJECT WITHOUT THE WRITTEN AUTHORIZATION OF CDM SMITH.

SCHEDULE OF SPECIAL INSPECTIONS

NOTES:

1. THIS DRAWING IS PROVIDED TO OUTLINE THE MINIMUM LEVEL OF SPECIAL INSPECTIONS DURING CONSTRUCTION TO ENSURE CONFORMANCE TO THE REQUIREMENTS OF THE CONTRACT DOCUMENTS. A STATEMENT OF SPECIAL INSPECTIONS WILL BE PREPARED BY A REGISTERED DESIGN PROFESSIONAL AND SUBMITTED WITH THE BUILDING PERMIT APPLICATION.
2. SPECIAL INSPECTIONS WILL BE CONDUCTED IN ACCORDANCE WITH THE REQUIREMENTS SET FORTH IN CHAPTER 17 OF THE INTERNATIONAL BUILDING CODE (IBC) AND CHAPTER 17 OF THE MASSACHUSETTS STATE BUILDING CODE (MSBC).
3. IN ACCORDANCE WITH THE REQUIREMENTS OF CHAPTER 17 OF THE INTERNATIONAL BUILDING CODE AND CHAPTER 17 OF THE MASSACHUSETTS STATE BUILDING CODE (MSBC), THE OWNER WILL PROVIDE AN APPROVED AGENCY OR AGENCIES, INDEPENDENT FROM THE CONTRACTOR AND EMPLOYING QUALIFIED PERSONNEL TO PERFORM SPECIAL INSPECTIONS IDENTIFIED IN THE STATEMENT OF SPECIAL INSPECTIONS. THE APPROVED AGENCY WILL FURNISH INSPECTION REPORTS TO THE DP, RC AND BUILDING OFFICIAL.
4. SPECIAL INSPECTIONS SHALL NOT RELIEVE THE CONTRACTOR OF RESPONSIBILITY FOR QUALITY CONTROL OF THE WORK OR FOR CONFORMANCE TO THE REQUIREMENTS OF THE CONTRACT DOCUMENTS. DETECTION, OR FAILURE TO DETECT, DEFECTS IN THE WORK SHALL NOT RELIEVE THE CONTRACTOR OF RESPONSIBILITY TO CORRECT ALL DEFECTS IN THE WORK, WHETHER DETECTED OR NOT, AND OF RESPONSIBILITY FOR CONFORMANCE TO THE REQUIREMENTS OF THE CONTRACT DOCUMENTS.
5. REMOVE AND REPLACE, OR REPAIR, DEFECTS IN THE WORK AND WORK NOT IN CONFORMANCE WITH THE REQUIREMENTS OF THE CONTRACT DOCUMENTS AT NO ADDITIONAL COST TO THE OWNER. CONTRACTOR SHALL BEAR THE COSTS FOR THE INSPECTION OF ANY REPLACED OR REPAIRED PORTIONS OF THE WORK.
6. CONTRACTOR SHALL COOPERATE WITH SPECIAL INSPECTIONS BY PROVIDING SUFFICIENT NOTICE FOR THE SCHEDULING OF PERSONNEL AND BY ALLOWING FREE AND SAFE ACCESS TO THE WORK FOR OBSERVATION, VERIFICATION, SAMPLING AND INSPECTION. PROVIDE AND PERMIT THE USE OF LADDERS, SCAFFOLDING, INCIDENTAL EQUIPMENT, AND SAFETY EQUIPMENT AS MAY BE REQUIRED TO CONDUCT SPECIAL INSPECTIONS. ALL SUCH PROVISIONS FOR FREE AND SAFE ACCESS AND EQUIPMENT SHALL BE SAFE, IN GOOD WORKING CONDITION, AND ERECTED, MAINTAINED, AND HANDLED BY QUALIFIED PERSONNEL.
7. SPECIAL INSPECTIONS DO NOT APPLY TO CONTRACTOR'S EQUIPMENT, TEMPORARY STRUCTURES USED FOR CONSTRUCTION, MEANS AND METHODS OF CONSTRUCTION, OR SITE SAFETY. CONTRACTOR SHALL REMAIN RESPONSIBLE FOR ADEQUACY AND SAFETY OF EQUIPMENT, TEMPORARY STRUCTURES USED FOR CONSTRUCTION, MEANS AND METHODS OF CONSTRUCTION AND SITE SAFETY.

TABLE 1 – REQUIRED VERIFICATION AND INSPECTION OF SOILS (IBC, TABLE 1705.6)

VERIFICATION AND INSPECTION	IBC REFERENCE	INSPECTION FREQUENCY		REFERENCE STANDARD	REMARKS
		CONTINUOUS	PERIODIC		
VERIFY MATERIALS BELOW SHALLOW FOUNDATIONS ARE ADEQUATE TO ACHIEVE THE DESIGN BEARING CAPACITY	1705.6		X	CONTRACT DOCUMENTS AND GEOTECHNICAL REPORT	REFER TO THE FOLLOWING TABLES FOR ADDITIONAL RELATED SPECIAL INSPECTIONS
VERIFY EXCAVATIONS ARE EXTENDED TO PROPER DEPTH AND HAVE REACHED PROPER MATERIAL			X		
PERFORM CLASSIFICATION AND TESTING OF COMPACTED FILL MATERIALS			X		
VERIFY USE OF PROPER MATERIALS, DENSITIES AND LIFT THICKNESS DURING PLACEMENT AND COMPACTION OF COMPACTED FILL		X			
PRIOR TO PLACEMENT OF COMPACTED FILL, INSPECT SUBGRADE AND VERIFY THAT SITE HAS BEEN PREPARED PROPERLY			X		

TABLE 2 – REQUIRED VERIFICATION AND INSPECTION OF CONCRETE CONSTRUCTION (IBC, TABLE 1705.3)

VERIFICATION AND INSPECTION	IBC REFERENCE	INSPECTION FREQUENCY		REFERENCE STANDARD
		CONTINUOUS	PERIODIC	
INSPECT REINFORCEMENT AND VERIFY PLACEMENT	1705.3 1908.4		X	ACI 318: CHAPTER 20, SECTIONS 25.2–25.3, 26.6.1–26.6.3
INSPECTION OF BOLTS TO BE INSTALLED IN CONCRETE PRIOR TO AND DURING PLACEMENT OF CONCRETE	1705.3		X	ACI 318: SECTION 17.8.2
VERIFYING USE OF REQUIRED DESIGN MIX	1705.3 1904.1 1904.2 1908.2 1908.3		X	ACI 318: CHAPTER 19, SECTIONS 26.4.3–26.4.4
PRIOR TO CONCRETE PLACEMENT, FABRICATE SPECIMENS FOR STRENGTH TESTS, PERFORM SLUMP AND AIR CONTENT TESTS, AND DETERMINE THE TEMPERATURE OF THE CONCRETE	1705.3 1908.10	X		ASTM C172, ASTM C31 ACI 318: SECTIONS 26.5, 26.12
INSPECT CONCRETE PLACEMENT FOR PROPER APPLICATION TECHNIQUES	1705.3 1908.6 1908.7 1908.8	X		ACI 318: SECTION 26.5
VERIFY MAINTENANCE OF SPECIFIED CURING TEMPERATURE AND TECHNIQUES	1705.3 1908.9		X	ACI 318: SECTIONS 26.5.3–26.5.5
INSPECT FORMWORK FOR SHAPE, LOCATION AND DIMENSIONS OF THE CONCRETE MEMBER BEING FORMED, SHORING AND RESHORING	1705.3 1903.2		X	ACI 318: SECTION 26.11.1.2(b)
REQUIRED VERIFICATION AND INSPECTION OF POST INSTALLED CONCRETE ANCHORS				
INSPECTION OF MECHANICAL ANCHORS INSTALLED IN HARDENED CONCRETE (EXPANSION ANCHORS)	1705.3 1901.3		X	ACI 318: SECTION 17.8.2 PER ICC TEST REPORT FOR EXPANSION ANCHORING SYSTEM
VERIFICATION AND INSPECTION OF ADHESIVE ANCHORS AND DOWELS INSTALLED IN HARDENED CONCRETE. ANCHOR PRODUCT NAME, TYPE, DIMENSIONS, HOLE DIMENSIONS, COMPLIANCE WITH DRILL BIT REQUIREMENTS, HOLE PREPARATION AND SURFACE ROUGHNESS, CLEANLINESS OF THE HOLE AND ANCHOR/ADHESIVE INSTALLATION, ANCHOR EMBEDMENT, AND TIGHTENING TORQUE	1705.3 1703.4.2	X		ACI 318: SECTION 17.8.2 PER ICC TEST REPORT FOR EXPANSION ANCHORING SYSTEM

11/20/25

REV. NO.	DATE	DRWN	CHKD	REMARKS

DESIGNED BY: A. AVERIN
DRAWN BY: A. AVERIN
SHEET CHK'D BY: M.K. BIJU
CROSS CHK'D BY: W. HOTZ JR.
APPROVED BY: D.L. HARRIS
DATE: NOVEMBER 2025

CDM Smith
3 Davol Square, Building A, Suite A-425
Providence, RI 02903
Tel: (401) 751-5360

TOWN OF YARMOUTH, MASSACHUSETTS
WASTEWATER COLLECTION AND WATER RESOURCE RECOVERY FACILITIES
PHASE 1 - CONTRACT NO. 6
PROJECT NO. CWSRF 8349/6

SPECIAL INSPECTION

PROJECT NO. 1125-273132
FILE NAME: S004STDT.dwg
SHEET NO.
S-4

XREFs: [SWPPS05, CDMS_2436] Images: []
Last saved by: AVERINKA Time: 8/8/2024 12:12:43 PM
pw:\\cdmsmith-az02-pw.bentley.com:pw_pl1\1125\273132\04 Design Services NM_30%\04 Structural\10 BIM_CADD\Contract-6 (PS1 and PS2)\S004STDT.dwg
© 2025 CDM SMITH ALL RIGHTS RESERVED.
REUSE OF DOCUMENTS: THESE DOCUMENTS AND DESIGNS PROVIDED BY PROFESSIONAL SERVICE, INCORPORATED HEREIN, ARE THE PROPERTY OF CDM SMITH AND ARE NOT TO BE USED, IN WHOLE OR PART, FOR ANY OTHER PROJECT WITHOUT THE WRITTEN AUTHORIZATION OF CDM SMITH.