# TOWN OF UPTON, MASSACHUSETTS

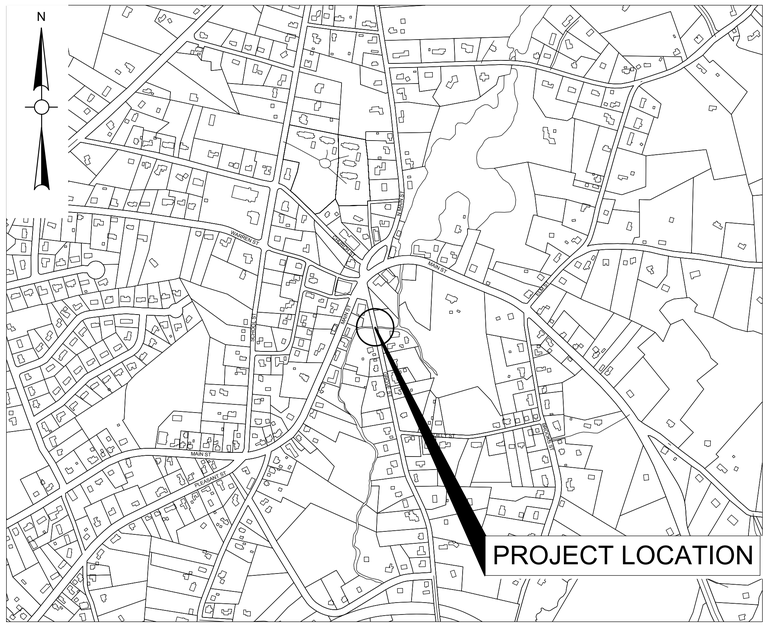


LOCATION PLAN
SCALE: 1"=500'

SHEET INDEX


| SHEET NO. | DESCRIPTION |
|---|---|
| G-00 | COVER SHEET |
| G-01 | LEGEND AND NOTES |
| C-01 | EXISTING CONDITIONS |
| C-02 | TYPICAL SECTIONS |
| C-03 | CONSTRUCTION PLAN |
| C-04 | ENVIRONMENTAL COMPLIANCE PLAN |
| C-05 | GRADING AND UTILITY PLAN |
| C-06 | DETOUR PLAN |
| C-07 | DETAILS SHEET 1 OF 2 |
| C-08 | DETAILS SHEET 2 OF 2 |
| C-09 | PLANTING PLAN |
| S-01 | KEY PLAN |
| S-02 | GENERAL NOTES |
| S-03 | BORING LOGS |
| S-04 | BRIDGE PLAN |
| S-05 | BRIDGE SECTIONS AND ELEVATIONS |
| S-06 | WATER CONTROL STAGES 1 - 2 |
| S-07 | WATER CONTROL STAGE 3 AND TYPICAL SECTION |
| S-08 | ABUTMENT PLAN |
| S-09 | ABUTMENT DETAILS |
| S-10 | APPROACH SLAB DETAILS |
| S-11 | PRECAST GUARDRAIL TRANSITION BASE |
| S-12 | PRECAST GUARDRAIL TRANSITION |
| S-13 | S3-TL4 BRIDGE RAILING |
| S-14 | CULVERT DETAILS |
| S-15 | UTILITY SUPPORT DETAILS |
| S-16 | PEDESTRIAN BRIDGE PLAN & ELEVATION |
| S-17 | PEDESTRIAN BRIDGE DETAILS |
| S-18 | SEGMENTAL BLOCK RETAINING WALL PLAN, ELEVATION & DETAILS |


# GROVE STREET BRIDGE OVER CENTER BROOK
# BRIDGE NO. U-01-004 (CRH)
# BRIDGE REPLACEMENT
# AND
# BRIDGE NO. U-01-004 (CRJ)
# PEDESTRIAN BRIDGE

## MAY 27, 2026

## BID DOCUMENTS


Weston & Sampson SM

Weston & Sampson Engineers, Inc.
100 Foxborough Boulevard,
Suite 250, Foxborough, MA 02035
508.698.3034 800.SAMPSON
www.westonandsampson.com


COMMONWEALTH OF MASSACHUSETTS
SCOTT R. BRUSO
STRUCTURAL
No. 48061
REGISTERED PROFESSIONAL ENGINEER
2026.05.26 18:52:40-04'00'

GENERAL NOTES:

1. TOPOGRAPHICAL INFORMATION IS BASED ON AN ON THE GROUND SURVEY PERFORMED BY CHAPPELL ENGINEERING IN FEBRUARY OF 2023.
2. THE HORIZONTAL COORDINATES ARE BASED ON NAD 83, THE VERTICAL DATUM IS NAVD 88.
3. THE LOCATIONS OF EXISTING UNDERGROUND UTILITIES ARE SHOWN IN AN APPROXIMATE WAY ONLY AND HAVE NOT BEEN INDEPENDENTLY VERIFIED BY THE OWNER OR ITS REPRESENTATIVE. THE CONTRACTOR SHALL DETERMINE THE EXACT LOCATION OF ALL EXISTING UTILITIES BEFORE COMMENCING WORK, AND AGREES TO BE FULLY RESPONSIBLE FOR ANY AND ALL DAMAGES WHICH MIGHT BE OCCASIONED BY THE CONTRACTOR'S FAILURE TO EXACTLY LOCATE AND PRESERVE ANY AND ALL UNDERGROUND UTILITIES. THE CONTRACTOR SHALL DIG TEST PITS WITH THE LOCATIONS BEING APPROVED BY THE ENGINEER PRIOR TO COMMENCEMENT OF WORK TO EXACTLY LOCATE EXISTING UTILITIES.
4. WHERE AN EXISTING UTILITY IS FOUND TO CONFLICT WITH THE PROPOSED WORK, THE LOCATION, ELEVATION AND SIZE OF THE UTILITY SHALL BE ACCURATELY DETERMINED WITHOUT DELAY BY THE CONTRACTOR AND THE INFORMATION FURNISHED TO THE ENGINEER FOR RESOLUTION OF THE CONFLICT.
5. THE CONTRACTOR SHALL MAKE ALL ARRANGEMENTS FOR THE ALTERATION AND ADJUSTMENT OF GAS, ELECTRIC, TELEPHONE AND ANY OTHER PRIVATE UTILITIES BY THE UTILITY OWNER. ANY ALTERATIONS SHALL BE INCIDENTAL TO THE PROJECT. THE CONTRACTOR IS RESPONSIBLE FOR THE TEMPORARY SUPPORT OF ALL UTILITIES TO REMAIN IN PLACE AND SHALL DESCRIBE IN WRITING, TO THE SATISFACTION OF THE ENGINEER, HIS METHOD OF TEMPORARY SUPPORT.
6. AREAS OUTSIDE THE LIMITS OF PROPOSED WORK DISTURBED BY THE CONTRACTOR'S OPERATIONS SHALL BE RESTORED BY THE CONTRACTOR TO THEIR ORIGINAL CONDITION AT THE CONTRACTOR'S EXPENSE.
7. THE TERM "PROPOSED (PROP)" INDICATES WORK TO BE CONSTRUCTED USING NEW MATERIALS OR, WHERE APPLICABLE, RE-USING EXISTING MATERIALS IDENTIFIED AS "REMOVE AND RESET (R&R)".
8. ALL EXISTING STATE, COUNTY AND TOWN LOCATION LINES AND PRIVATE PROPERTY LINES HAVE BEEN ESTABLISHED FROM AVAILABLE INFORMATION AND THEIR EXACT LOCATION ARE NOT GUARANTEED.
9. ALL EXCESS MATERIAL FROM ROADWAY RECONSTRUCTION OR THE EXCAVATION PROCESS SHALL BE REUSED ON SITE OR REMOVED FROM THE SITE AND DISPOSED OF IN A LEGAL AND PROPER MANNER.
10. THE CONTRACTOR SHALL CALL DIGSAFE AT 1-888-344-7233 AT LEAST 72 HOURS, SATURDAYS, AND HOLIDAYS EXCLUDED, PRIOR TO EXCAVATING AT ANY LOCATION. A COPY OF THE DIGSAFE PROJECT REFERENCE NUMBER(S) SHALL BE GIVEN TO THE TOWN PRIOR TO EXCAVATION.
11. THE CONTRACTOR SHALL VERIFY BY TEST PIT, THE LOCATION OF EXISTING UTILITIES WHICH MAY CONFLICT WITH THE PROPOSED DRAINAGE DESIGN. ANY FIELD ADJUSTMENTS REQUIRED WILL BE MADE AS APPROVED OR DIRECTED BY THE ENGINEER. ONLY AFTER THE CONTRACTOR VERIFIES ELEVATIONS FOR THE CONSTRUCTABILITY OF THE DRAINAGE SYSTEM, THE STRUCTURES SHALL BE ORDERED.
12. JOINTS BETWEEN HOT MIX ASPHALT TRENCH PAVEMENT AND SAWCUT EXISTING PAVEMENT SHALL BE SEALED WITH BITUMEN AND BACKSANDED.
13. IF DEEMED NECESSARY DUE TO THE WORK, THE CONTRACTOR SHALL COORDINATE WITH THE TOWN OF UPTON AND THE ENGINEER FOR APPROVAL OF SHUTTING DOWN ANY EXISTING WATER MAINS AND SHALL ALSO OBTAIN APPROVAL FOR DISRUPTING ANY EXISTING SEWER FLOWS.
14. THE CONTRACTOR SHALL BE AWARE THAT ONLY TOWN PERSONNEL ARE ALLOWED TO OPERATE WATER GATES AND HYDRANTS. ANY REQUESTS TO OPERATE THE GATES SHALL BE COORDINATED THROUGH THE TOWN.
15. THE CONTRACTOR SHALL COORDINATE ANY WORK FOR THE PROJECT WITH ALL ADJACENT/CONCURRENT PROJECTS AND CONTRACTORS.
16. THE CONTRACTOR SHALL INSTALL PRIOR TO COMMENCEMENT OF WORK, MAINTAIN, AND REMOVE AT THE END OF THE PROJECT INLET SEDIMENT CONTROL BAGS IN ALL CATCH BASINS, WITHIN OR ADJACENT TO THE PROJECT LIMITS. THE CONTRACTOR SHALL ALSO MAINTAIN SILT FENCE AND COMPOST FILTER TUBES AS SHOWN ON THE PLANS THROUGHOUT THE DURATION OF THE PROJECT AND REMOVE AT THE END.
17. ANY GRASS AREAS DISTURBED BY THE WORK SHALL BE RESTORED WITH LOAM AND SEED.
18. ANY LANDSCAPED AREAS DISTURBED BY THE WORK SHALL BE RESTORED TO EXISTING CONDITIONS WITH EXISTING OR NEW GROUND COVER MATERIALS AS DIRECTED BY THE ENGINEER. ANY PLANTS, SHRUBS, OR FLOWERS DISTURBED BY THE WORK SHALL BE RESET TO EXISTING CONDITIONS OR REPLACED WITH NEW PLANTS, SHRUBS, OR FLOWERS AS DIRECTED BY THE ENGINEER. ALL WORK TO RESTORE LANDSCAPE AREAS, NEW GROUND COVER MATERIALS, NEW PLANTS, NEW SHRUBS, OR NEW FLOWERS REQUIRED BY THE ENGINEER SHALL BE INCIDENTAL TO THE PROJECT.
19. CONTRACTOR TO COORDINATE WITH UTILITY POLE OWNERS IN AREAS WHERE UNDERGROUND UTILITY WORK IS WITHIN CLOSE PROXIMITY AND POSSIBLE UTILITY POLE SHORING IS REQUIRED WHILE INSTALLING PROPOSED UTILITIES.
20. RAISE AND ADJUST FRAMES AND GRATES, FRAMES AND COVERS AND GATE BOXES PRIOR TO PAVEMENT OVERLAY, IF REQUIRED.
21. THE CONTRACTOR SHALL INSTALL PLANTINGS ALONG CENTER BROOK AS SHOWN IN THE PLANTING PLAN (SHEET NO. C-09).

## GENERAL SYMBOLS

| EXISTING | PROPOSED | DESCRIPTION |
|---|---|---|
| CB | CB | CATCH BASIN |
| MB | MB | MAIL BOX |
| EHH | EHH | ELECTRIC HANDHOLE |
| GG | GG | GAS GATE |
| GM | | GAS METER |
| BHL # | BHL # | BORING HOLE |
| MW # | MW # | MONITORING WELL |
| TP # | TP # | TEST PIT |
| WF# | | WETLAND FLAG |
| TOB# | | TOP OF BANK |
| | | HYDRANT |
| | D | DRAINAGE MANHOLE |
| | | SEWER MANHOLE |
| SB | | STONE BOUND |
| TB | | TOWN OR CITY BOUND |
| | | TRAVERSE OR TRIANGULATION STATION |
| | | GUY POLE |
| ULT | ULT | UTILITY POLE W / 1 LIGHT |
| UPL | UPL | UTILITY POLE |
| | | BUSH |
| SIZE & TYPE | | TREE |
| WG | | WATER GATE |
| | | SIGN |
| | | OVERHEAD CABLE/WIRE |
| | | CURBING |
| 100 | 100 | CONTOURS |
| | | UNDERGROUND DRAIN PIPE |
| E | E | UNDERGROUND ELECTRIC DUCT |
| G | G | UNDERGROUND GAS MAIN |
| S | S | UNDERGROUND SEWER MAIN |
| T | T | UNDERGROUND TELEPHONE DUCT |
| W | W | UNDERGROUND WATER MAIN |
| | | GUARD RAIL - STEEL POSTS |
| | | GUARD RAIL - WOOD POSTS |
| X | X | FENCE |
| | | TREE LINE |
| | | SEDIMENT CONTROL BARRIER |
| | | SAWCUT LINE |
| | | TOP OR BOTTOM OF SLOPE |
| | | LIMIT OF EDGE OF PAVEMENT OR COLD PLANE AND OVERLAY |
| | | BANK OF RIVER OR STREAM |
| | | BORDER OF WETLAND |
| | | 100 FT WETLAND BUFFER |
| | | 200 FT RIVERFRONT BUFFER |
| | | TOWN OR CITY LAYOUT |
| ℄ | | PROPERTY LINE OR APPROXIMATE PROPERTY LINE |
| | | EASEMENT |

## PAVEMENT MARKINGS SYMBOLS

| EXISTING | PROPOSED | DESCRIPTION |
|---|---|---|
| | SWL | SOLID WHITE LINE |
| | SYL | SOLID YELLOW LINE |
| | DBYL | DOUBLE YELLOW LINE |
| | SL | STOP LINE |

## ABBREVIATIONS

GENERAL

| | |
|---|---|
| AADT | ANNUAL AVERAGE DAILY TRAFFIC |
| ABAN | ABANDON |
| ADJ | ADJUST |
| APPROX. | APPROXIMATE |
| AC | ASBESTOS CEMENT |
| BIT | BITUMINOUS |
| BC | BOTTOM OF CURB |
| BD. | BOUND |
| BL | BASELINE |
| BLDG | BUILDING |
| BM | BENCHMARK |
| BO | BY OTHERS |
| BOS | BOTTOM OF SLOPE |
| BR. | BRIDGE |
| CB | CATCH BASIN |
| CC | CEMENT CONCRETE |
| CCM | CEMENT CONCRETE MASONRY |
| CEM | CEMENT |
| CI | CURB INLET |
| CIP | CAST IRON PIPE |
| CLF | CHAIN LINK FENCE |
| CL | CENTERLINE |
| CMP | CORRUGATED METAL PIPE |
| CO. | COUNTY |
| CONC | CONCRETE |
| CONT | CONTINUOUS |
| CONST | CONSTRUCTION |
| CR GR | CROWN GRADE |
| DH | DRILL HOLE |
| DHV | DESIGN HOURLY VOLUME |
| DIA | DIAMETER |
| DIP | DUCTILE IRON PIPE |
| DMH | DRAINAGE MANHOLE |
| DWY | DRIVEWAY |
| ELEV (or EL.) | ELEVATION |
| EMB | EMBANKMENT |
| EOP | EDGE OF PAVEMENT |
| EXIST (or EX) | EXISTING |
| EXC | EXCAVATION |
| F&C | FRAME AND COVER |
| F&G | FRAME AND GRATE |
| FDN. | FOUNDATION |
| FLDSTN | FIELDSTONE |
| GAR | GARAGE |
| GG | GAS GATE |
| GI | GUTTER INLET |
| GM | GAS METER |
| GR | GUARDRAIL |
| GRAN | GRANITE |
| GRAV | GRAVEL |
| HDW | HEADWALL |
| HMA | HOT MIX ASPHALT |
| HOR | HORIZONTAL |
| HYD | HYDRANT |
| INV | INVERT |
| L | LENGTH OF CURVE |
| LP | LIGHT POLE |
| LSA | LANDSCAPED AREA |
| LT | LEFT |
| MAX | MAXIMUM |
| MB | MAILBOX |
| MH | MANHOLE |
| MHB | MASSACHUSETTS HIGHWAY BOUND |
| MIN | MINIMUM |
| MSRW | MASONRY RETAINING WALL |
| MW | MONITORING WELL |
| N/F | NOW / FORMERLY |
| NIC | NOT IN CONTRACT |
| NO. | NUMBER |
| OHW | ORDINARY HIGH WATER |
| PC | POINT OF CURVATURE |
| PCC | POINT OF COMPOUND CURVATURE |
| PCMS | PORTABLE CHANGEABLE MESSAGE SIGN |
| PERM | PERMANENT |
| P.G.L. | PROFILE GRADE LINE |
| PL | PLASTIC |
| PI | POINT OF INTERSECTION |
| POC | POINT ON CURVE |
| POT | POINT ON TANGENT |
| PRC | POINT OF REVERSE CURVATURE |
| PROJ | PROJECT |
| PROP | PROPOSED |
| PROT | PROTECT |
| PT | POINT OF TANGENCY |
| PVC | POINT OF VERTICAL CURVATURE |
| PVC | POLYVINYL CHLORIDE |
| PVI | POINT OF VERTICAL INTERSECTION |
| PVT | POINT OF VERTICAL TANGENCY |
| PVMT | PAVEMENT |
| PWW | PAVED WATER WAY |

## ABBREVIATIONS (cont.)

GENERAL

| | |
|---|---|
| R | RADIUS |
| R | RIM ELEVATION |
| RB | REBAR / IRON PIPE |
| R&D | REMOVE AND DISPOSE |
| RCP | REINFORCED CONCRETE PIPE |
| RD | ROAD |
| RDWY | ROADWAY |
| REM | REMOVE |
| RET | RETAIN |
| RET WALL | RETAINING WALL |
| ROW | RIGHT OF WAY |
| RR | RAILROAD |
| R&R | REMOVE AND RESET |
| R&S | REMOVE AND STACK |
| RT | RIGHT |
| SB | STONE BOUND |
| SBGR | STEEL BEAM GUARDRAIL |
| SHLD | SHOULDER |
| SMH | SEWER MANHOLE |
| ST | STREET |
| STA | STATION |
| SSD | STOPPING SIGHT DISTANCE |
| SHLO | STATE HIGHWAY LAYOUT LINE |
| SW | SIDEWALK |
| T | TANGENT DISTANCE OF CURVE |
| TAN | TANGENT |
| TEMP | TEMPORARY |
| TC | TOP OF CURB |
| TOB | TOP OF BANK |
| TOS | TOP OF SLOPE |
| TYP | TYPICAL |
| UG | UNDERGROUND |
| UP | UTILITY POLE |
| VAR | VARIES |
| VERT | VERTICAL |
| VC | VERTICAL CURVE |
| VGC | VERTICAL GRANITE CURB |
| WF | WETLAND FLAG |
| WG | WATER GATE |
| WM | WATER METER/WATER MAIN |
| WW | WALKWAY |
| X-SECT | CROSS SECTION |

Project:
GROVE STREET BRIDGE
UPTON, MA 01568

TOWN OF UPTON INCORPORATED JUNE 14, 1735 MASSACHUSETTS

Weston & Sampson
Weston & Sampson Engineers, Inc.
100 Foxborough Boulevard, Suite 250
Foxborough, MA 02035
978.532.1900 800.SAMPSON
www.westonandsampson.com

Consultants:

Revisions:

| No. | Date | Description |
|---|---|---|
| | | |
| | | |
| | | |
| | | |
| | | |
| | | |
| | | |
| | | |

COA:

Seal:
COMMONWEALTH OF MASSACHUSETTS
SCOTT R. BRUSO
STRUCTURAL
No. 48061
REGISTERED PROFESSIONAL ENGINEER
2026.05.26 14:52:26-04'00'

Issued For:
BID DOCUMENTS

Scale: AS NOTED

Date: MAY 27, 2026
Drawn By: CTC
Reviewed By: JLP
Approved By: DA

W&S Project No.: ENG22-1175
W&S File No.:

Drawing Title:
LEGEND AND NOTES

Sheet Number:
G-01

P:\Milton_Mill Creek St Bridge\CAD\2275-CAD-19\Stage\Project Drawings\Draft\Pre-Sheet Files\Pre-Sheet Files\01GENERAL AND NOTES.dwg

COPYRIGHT © 2021 WESTON & SAMPSON, INC.

**SURVEY NOTES**

1. UNDERGROUND UTILITY LOCATIONS SHOWN HEREON ARE BASED ON UTILITY EVIDENCE AT GROUND SURFACE AND RECORD DRAWINGS AND ARE SUBJECT TO FIELD VERIFICATION BY EXCAVATION. UTILITIES SHOWN DO NOT PURPORT TO CONSTITUTE OR REPRESENT ALL UTILITIES LOCATED UPON OR ADJACENT TO THE SURVEYED PREMISES.
2. SURVEY PERFORMED BY CHAPPELL ENGINEERING IN FEBRUARY 2023.
3. THE HORIZONTAL COORDINATES ARE BASED ON NAD 83, THE VERTICAL DATUM IS NAVD 88.
4. THE ENTIRETY OF THE PROJECT IS LOCATED WITHIN THE 200' RIVERFRONT AREA.

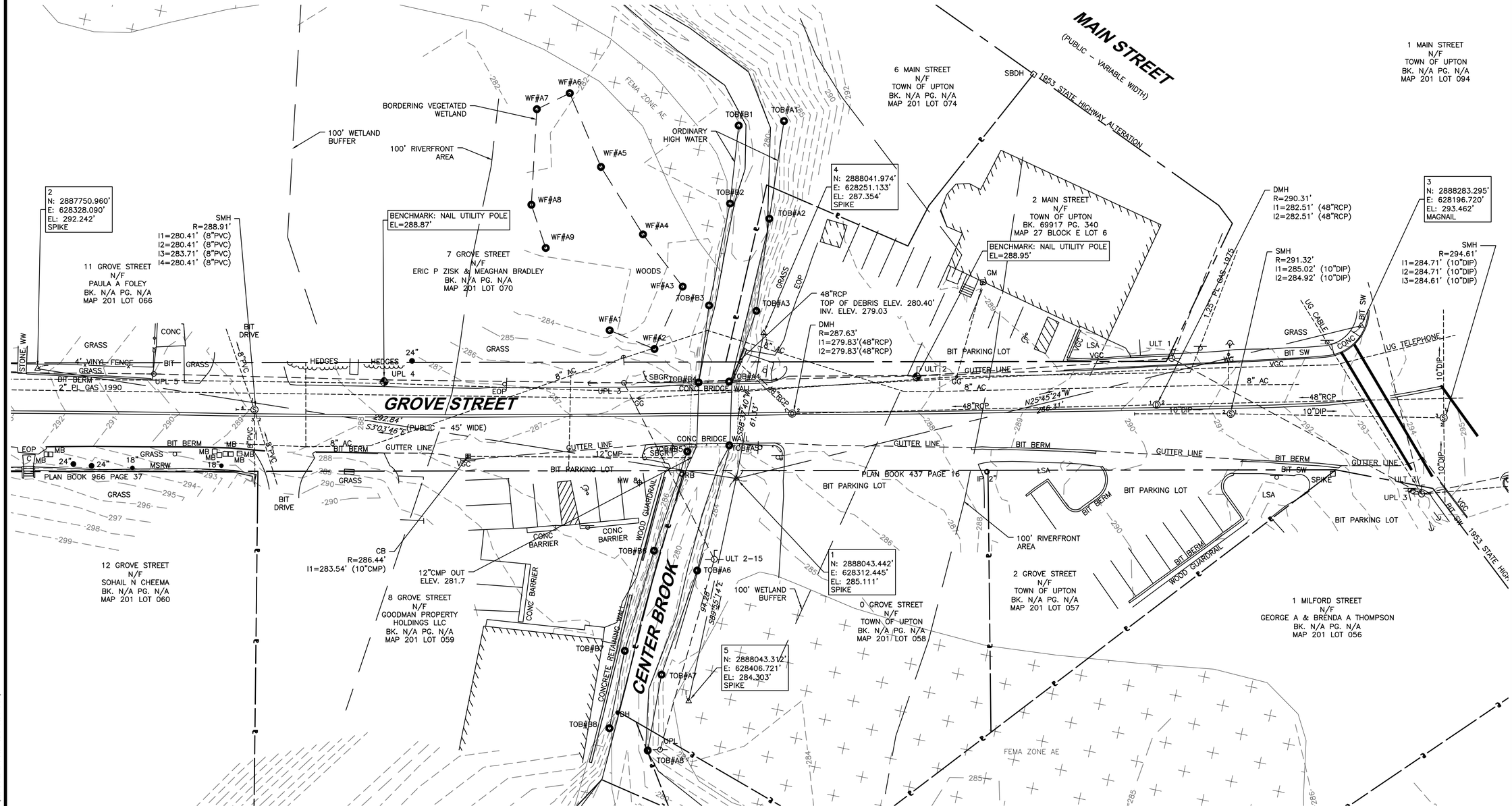


Project:
GROVE STREET BRIDGE
UPTON, MA 01568


Weston & Sampson Engineers, Inc.
100 Foxborough Boulevard, Suite 250
Foxborough, MA 02035
978.532.1900 800.SAMPSON
www.westonandsampson.com


Consultants:

Revisions:

| No. | Date | Description |
|---|---|---|
| | | |

COA:

Seal:

Issued For:
BID DOCUMENTS

Scale: AS NOTED

Date: MAY 27, 2026
Drawn By: CTC
Reviewed By: JLP
Approved By: DA

W&S Project No.: ENG22-1175
W&S File No.:

Drawing Title:
EXISTING CONDITIONS

Sheet Number:
C-01


COPYRIGHT © 2021 WESTON & SAMPSON, INC.


P:\Mill\Upton MA\Grove St. Bridge\CAD\2175 CAD \100dpi\Plan\Drawing Data\Plan Sheet\Plan Sheet SHEET\EXISTING CONDITIONS.dwg

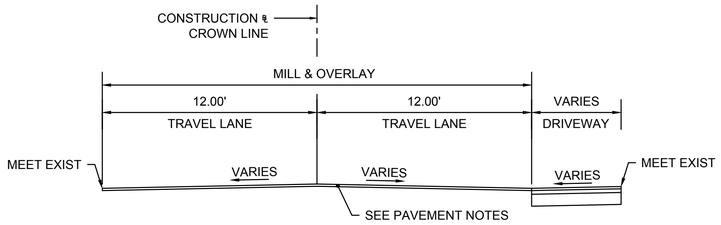


MILL & OVERLAY - SOUTHERN LIMITS
(STA 11+15 TO 11+40)
NOT TO SCALE

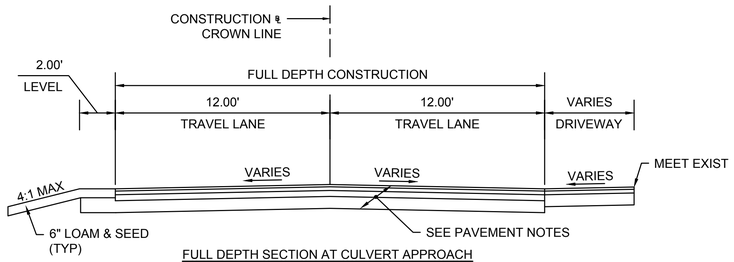


FULL DEPTH SECTION AT CULVERT APPROACH
(STA 11+40 TO 12+28)
NOT TO SCALE

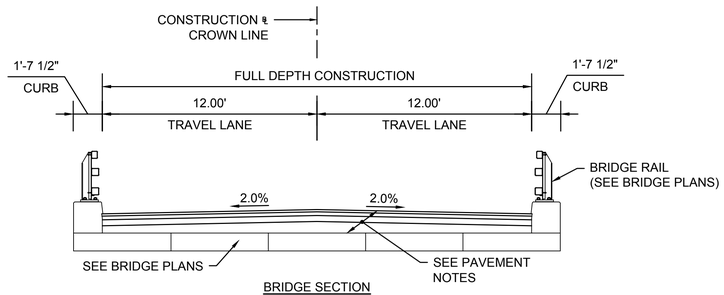


BRIDGE SECTION
(STA 12+28 TO 12+71)
NOT TO SCALE

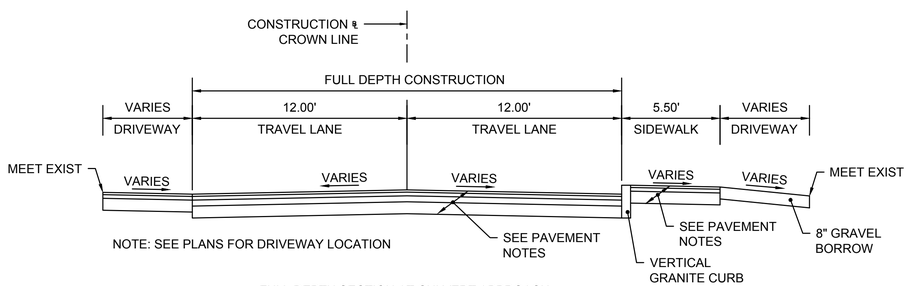


FULL DEPTH SECTION AT CULVERT APPROACH
(STA 12+71 TO 13+35)
NOT TO SCALE

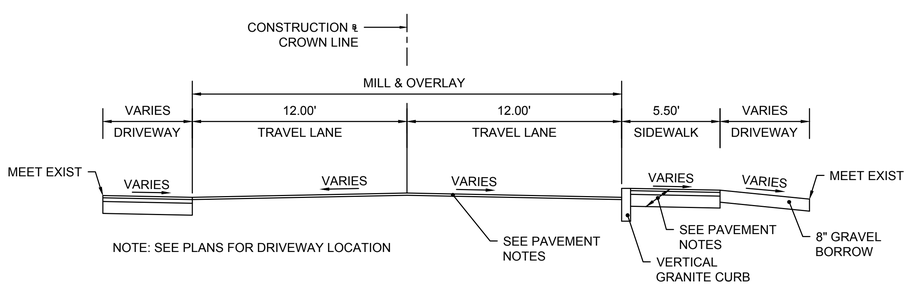


MILL & OVERLAY - NORTHERN LIMITS
(STA 13+35 TO 13+61)
NOT TO SCALE

PAVEMENT NOTES

PROPOSED PAVEMENT MILLING AND OVERLAY:

1 ½" SUPERPAVE BRIDGE SURFACE COURSE - 9.5 (SSC-B-9.5) OVER
ASPHALT EMULSION FOR TACK COAT OVER
1 ½" PAVEMENT FINE MILLING AND VARIABLE DEPTH OVERLAY

PROPOSED FULL DEPTH PAVEMENT:

1 ½" SUPERPAVE BRIDGE SURFACE COURSE - 9.5 (SSC-B-9.5) OVER
ASPHALT EMULSION FOR TACK COAT OVER
2 ½" SUPERPAVE INTERMEDIATE COURSE - 19.0 (SIC-19.0) OVER
4" DENSE GRADED CRUSHED STONE OVER
8" GRAVEL BORROW, TYPE B

PROPOSED HMA DRIVEWAY AND HMA SIDEWALK:

1 ½" HMA SURFACE COURSE OVER
ASPHALT EMULSION FOR TACK COAT OVER
2 ½" HMA INTERMEDIATE COURSE OVER
8" GRAVEL BORROW, TYPE B

TACK COAT SHALL BE APPLIED AT RATE OF 0.07 - 0.09 GALLON PER SQUARE YARD OVER MILLED SURFACES AND 0.06 - 0.08 GALLON PER SQUARE YARD OVER SMOOTH PAVED SURFACES.

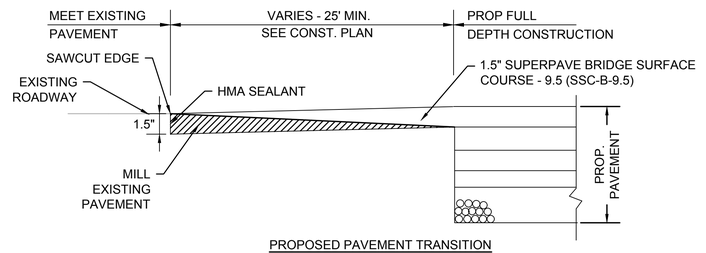


PROPOSED PAVEMENT TRANSITION
(LONGITUDINAL SECTION)
NOT TO SCALE

Project:
GROVE STREET BRIDGE
UPTON, MA 01568

Weston & Sampson Engineers, Inc.
100 Foxborough Boulevard, Suite 250
Foxborough, MA 02035
978.532.1900 800.SAMPSON
www.westonandsampson.com

Consultants:

Revisions:

| No. | Date | Description |
|---|---|---|
| | | |
| | | |
| | | |
| | | |
| | | |
| | | |
| | | |
| | | |

COA:

Seal:
COMMONWEALTH OF MASSACHUSETTS
SCOTT R. BRUSO
STRUCTURAL
No. 48061
REGISTERED PROFESSIONAL ENGINEER
2026.05.26 14:51:58-04'00'

Issued For:
BID DOCUMENTS

Scale: AS NOTED

Date: MAY 27, 2026
Drawn By: CTC
Reviewed By: JLP
Approved By: DA

W&S Project No.: ENG22-1175
W&S File No.:

Drawing Title:
TYPICAL SECTIONS

Sheet Number:
C-02

COPYRIGHT © 2021 WESTON & SAMPSON, INC.

P:\Municipal\Upton, MA\Grove St. Bridge\CAD\22175-CAD-1905\dgn\Project Drawings\Data\Plan Sheet Files\Plan Sheet Files\05\27\PSHL_SECTIONS.dwg

**NOTES**

1. THE CONTRACTOR SHALL INSTALL PLANTINGS ALONG CENTER BROOK AS SHOWN IN SHEET C-09 - PLANTING PLAN.

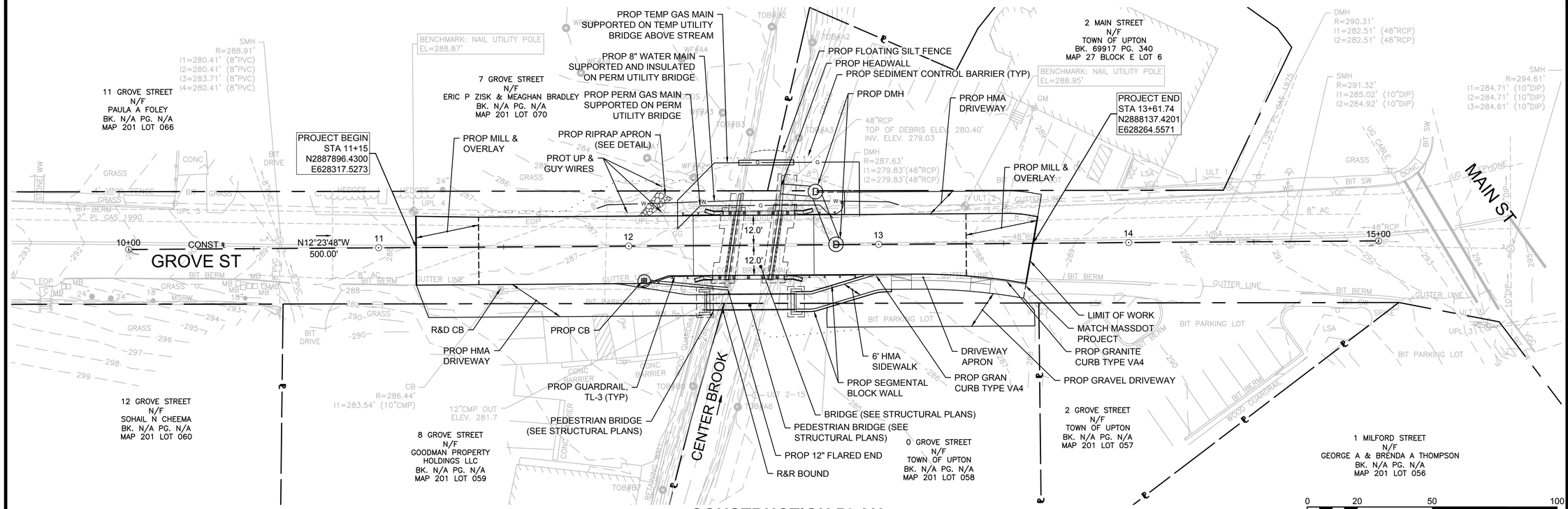


## CONSTRUCTION PLAN

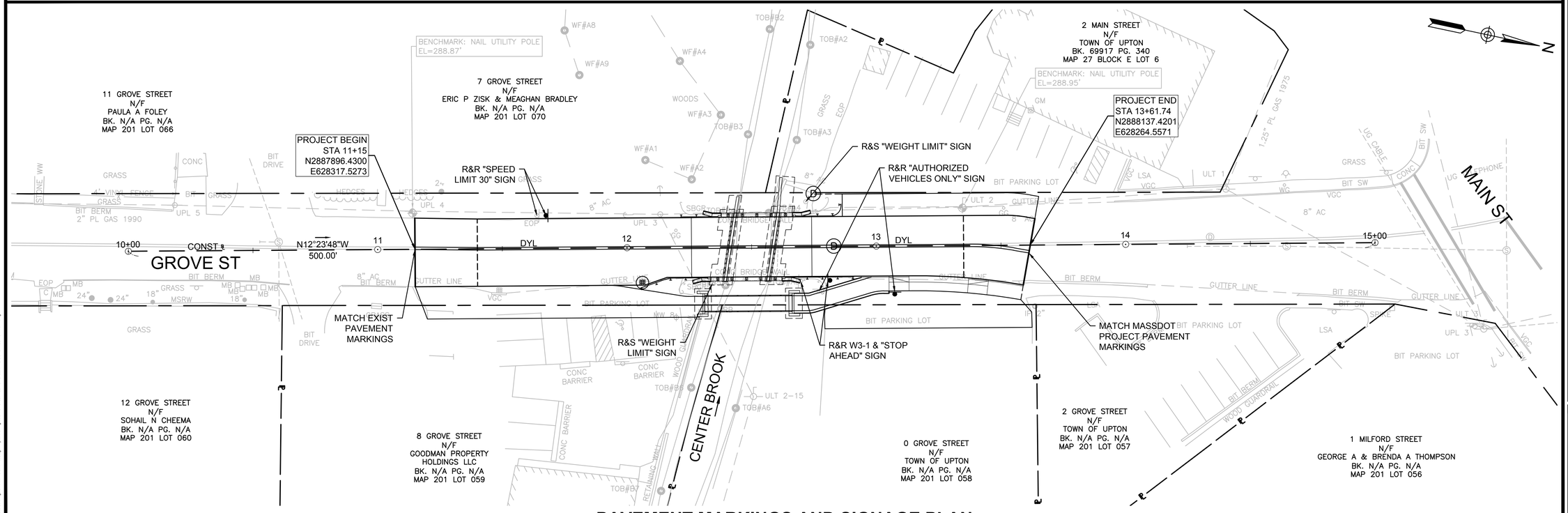


## PAVEMENT MARKINGS AND SIGNAGE PLAN

P:\Milford - Main\Grove St Bridge\CAD\2021\TLCAD-1\05\dgn\Project Drawings [Set]\Plan Sheet Files\Plan Sheet (B05)\CONSTRUCTION PLAN.dwg


Project:
GROVE STREET BRIDGE
UPTON, MA 01568

Weston & Sampson

Weston & Sampson Engineers, Inc.
100 Foxborough Boulevard, Suite 250
Foxborough, MA 02035
978.532.1900 800.SAMPSON
www.westonandsampson.com

Consultants:


Revisions:

| No. | Date | Description |
|---|---|---|
| | | |
| | | |
| | | |
| | | |
| | | |
| | | |
| | | |
| | | |

COA:

Seal:
COMMONWEALTH OF MASSACHUSETTS
SCOTT R. BRUSO
STRUCTURAL
No. 48061
REGISTERED PROFESSIONAL ENGINEER
2026.05.26 14:51:39-04'00'

Issued For:
BID DOCUMENTS

| | |
|---|---|
| Scale: | AS NOTED |
| Date: | MAY 27, 2026 |
| Drawn By: | CTC |
| Reviewed By: | JLP |
| Approved By: | DA |
| W&S Project No.: | ENG22-1175 |
| W&S File No.: | |

Drawing Title:
CONSTRUCTION PLAN

Sheet Number:
C-03


COPYRIGHT © 2021 WESTON & SAMPSON, INC.

**NOTES**

1. THE CONTRACTOR SHALL INSTALL PLANTINGS ALONG CENTER BROOK AS SHOWN IN THE UPTON COMMUNITY CENTER MITIGATION AREA PLANTING PLAN (SHEET NO. L1.3).
2. THE ENTIRETY OF THE PROJECT IS LOCATED WITHIN THE 200' RIVERFRONT AREA.
3. PER FEMA FLOOD MAPPING, CENTER BROOK IS A ZONE AE: REGULATORY FLOODWAY AT EL. 281'. ALL WORK OCCURRING AT OR BELOW EL. 281' IS WITHIN THE WATERWAY (BELOW TOB) AND IS THEREFORE COUNTED AS LAND UNDER WATER IMPACT. THERE ARE NO IMPACTS TO THE FLOODZONE AS PART OF THIS PROJECT.
4. FOR MORE DETAILED INFORMATION ABOUT WATER HANDLING, SEE STRUCTURAL SHEETS.

| ENVIRONMENTAL IMPACTS | |
|---|---|
| LAND UNDER WATER PERMANENT IMPACTS | 5 SF |
| LAND UNDER WATER TEMPORARY IMPACTS | 745 SF |
| BANK IMPACTS | 143.7 LF |
| DREDGING VOLUME | 63 CY |
| IMPACTS WITHIN 0-100 FT RIVERFRONT AREA | 12398 SF |
| IMPACTS WITHIN 100-200 FT RIVERFRONT AREA | 1028 SF |

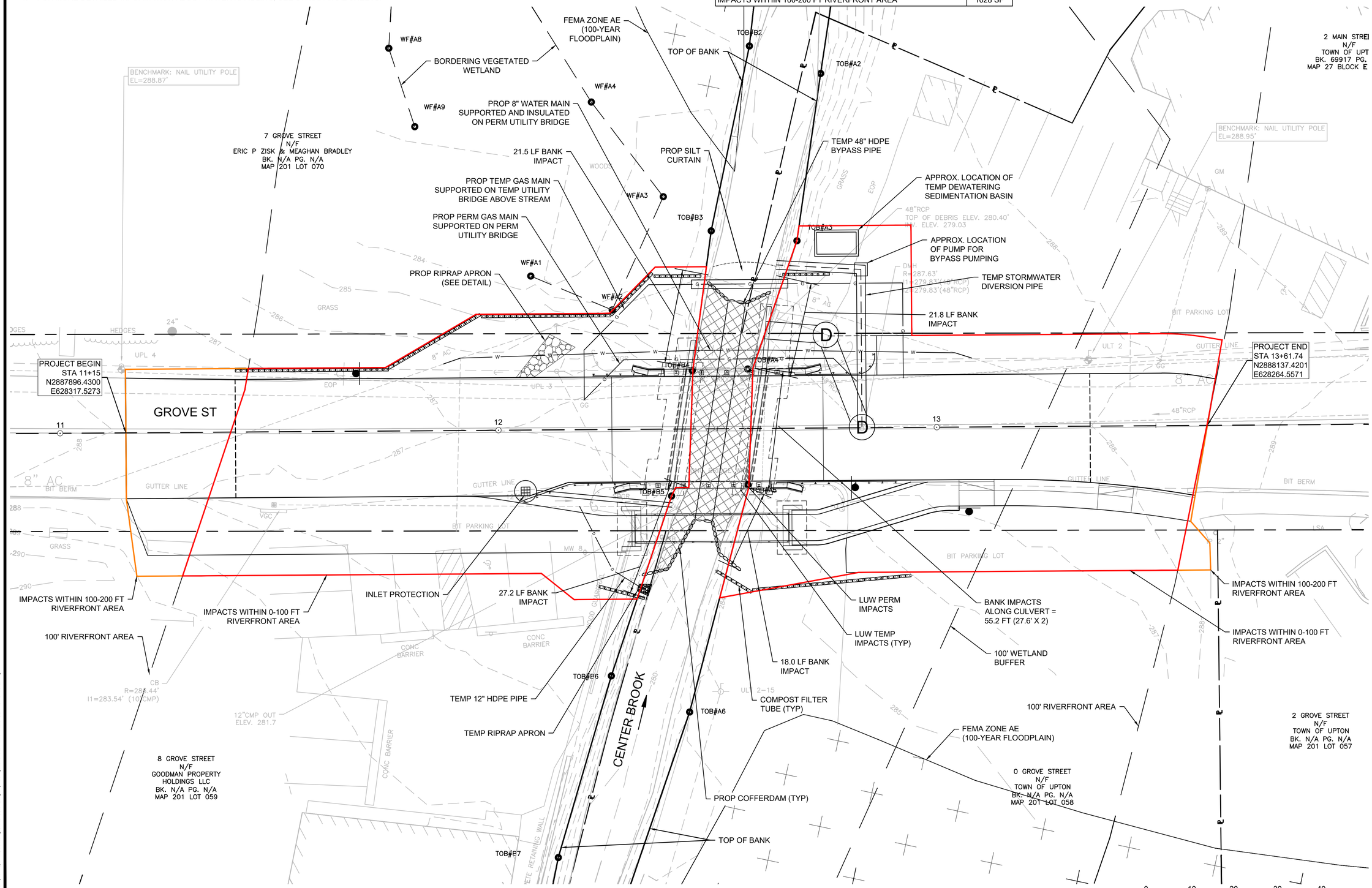


Project:
GROVE STREET BRIDGE
UPTON, MA 01568


Weston & Sampson Engineers, Inc.
100 Foxborough Boulevard, Suite 250
Foxborough, MA 02035
978.532.1900 800.SAMPSON
www.westonandsampson.com


Consultants:

Revisions:

| No. | Date | Description |
|---|---|---|
| | | |

COA:

Seal:
COMMONWEALTH OF MASSACHUSETTS
SCOTT R. BRUSO
STRUCTURAL
No. 48061
REGISTERED PROFESSIONAL ENGINEER
2026.05.26 14:51:21-04'00'

Issued For:
BID DOCUMENTS

Scale: AS NOTED

Date: MAY 27, 2026
Drawn By: CC
Reviewed By: ---
Approved By: ---
W&S Project No.: ENG22-1175
W&S File No.:

Drawing Title:
ENVIRONMENTAL COMPLIANCE PLAN

Sheet Number:
C-04


COPYRIGHT © 2021 WESTON & SAMPSON, INC.



\\wes01\civil\WSE\Projects\MA\Upton MA\Grove St Bridge\CAD\2171 CAD 1970\dwg\Project Drawing\TitleSht.dwg, Sheet Plot(Plot Sheet 2)\ENVIRONMENTAL PLAN.dwg

**NOTES**

1. SEE SHEET NO. S-15 FOR UTILITY SUPPORT DETAILS AND ELEVATIONS.

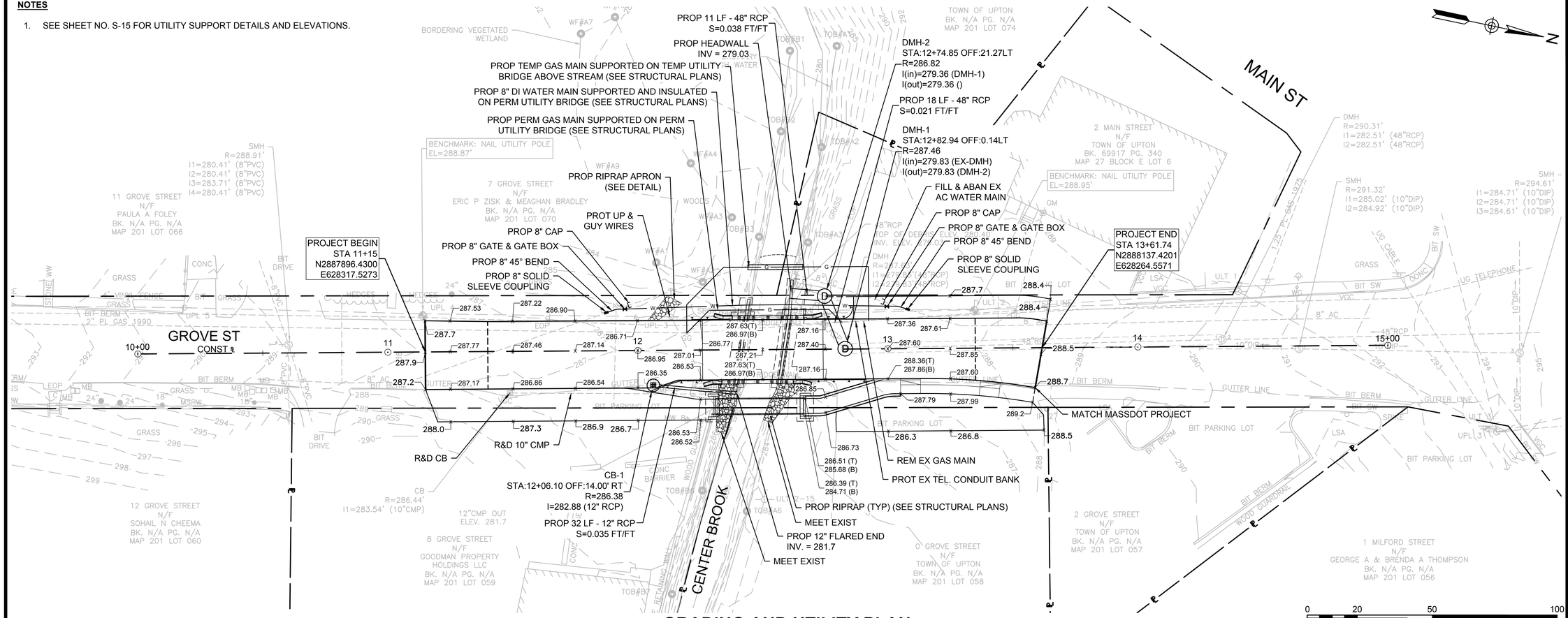


## GRADING AND UTILITY PLAN

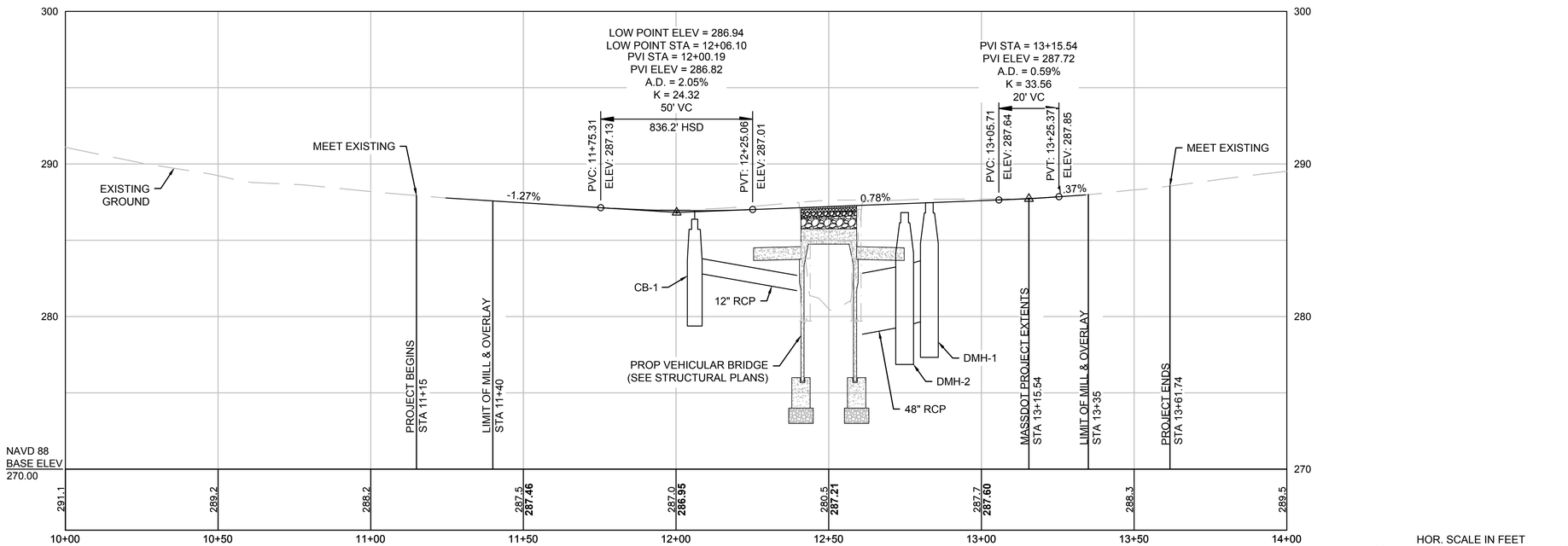


## PROFILE


Project:
GROVE STREET BRIDGE
UPTON, MA 01568

Weston & Sampson Engineers, Inc.
100 Foxborough Boulevard, Suite 250
Foxborough, MA 02035
978.532.1900 800.SAMPSON
www.westonandsampson.com

Consultants:


Revisions:

| No. | Date | Description |
|---|---|---|
| | | |
| | | |
| | | |
| | | |
| | | |
| | | |
| | | |
| | | |

COA:

Seal:
COMMONWEALTH OF MASSACHUSETTS
SCOTT R. BRUSO
STRUCTURAL
No. 48061
REGISTERED PROFESSIONAL ENGINEER
2026.05.26 14:50:56-04'00'

Issued For:
BID DOCUMENTS

Scale: AS NOTED

Date: MAY 27, 2026
Drawn By: CTC
Reviewed By: JLP
Approved By: DA
W&S Project No.: ENG22-1175
W&S File No.:

Drawing Title:
GRADING AND UTILITY PLAN

Sheet Number:
C-05


COPYRIGHT © 2021 WESTON & SAMPSON, INC.


P:\Mill Upton Mill\Grove St. Bridge\CAD\2175 CAD \RSMap\Project Drawing Data\Plan Sheet Data\Plan Sheet Files\GRADING AND UTILITY PLAN.dwg

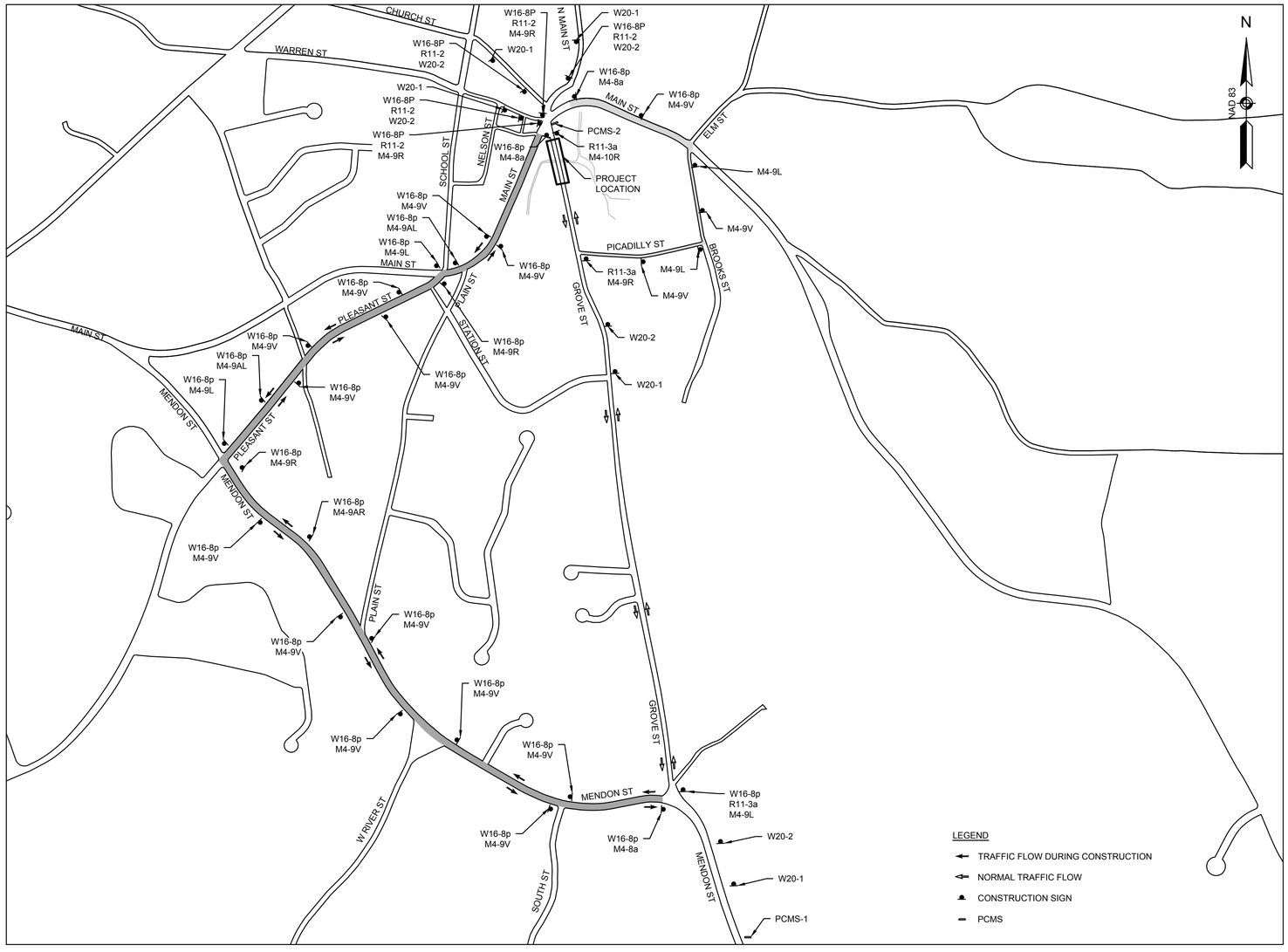


## OVERALL DETOUR PLAN

0 500 1000 1500 2000

SCALE: 1" = 500'

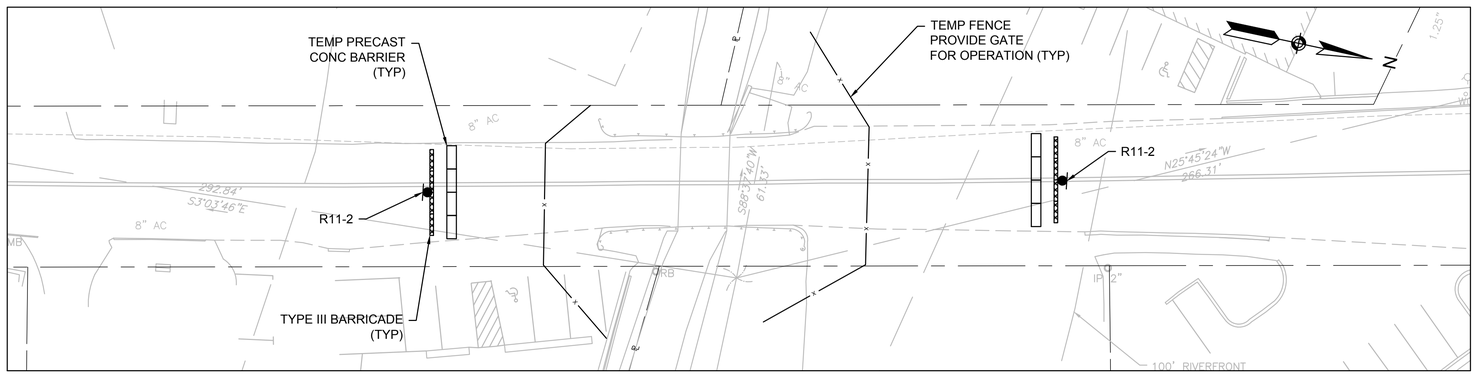


## TEMPORARY BRIDGE CLOSURE PLAN

0 20 50 100

SCALE: 1" = 20'

## TEMPORARY TRAFFIC SIGN SUMMARY

| IDENTIFICATION NUMBER | SIZE OF SIGN | | TEXT | QTY |
|---|---|---|---|---|
| | WIDTH | HEIGHT | | |
| R11-2 | 48" | 30" | BRIDGE CLOSED | 6 |
| R11-3A | 60" | 30" | BRIDGE CLOSED AHEAD LOCAL TRAFFIC ONLY | 3 |
| M4-8a | 24" | 18" | END DETOUR | 3 |
| M4-9AL | 30" | 24" | DETOUR | 2 |
| M4-9AR | 30" | 24" | DETOUR | 1 |
| M4-9L | 30" | 24" | DETOUR | 5 |
| M4-9R | 30" | 24" | DETOUR | 5 |
| M4-9V | 30" | 24" | DETOUR | 16 |
| W16-8p | VARIES | 12" | GROVE ST | 30 |
| W20-1 | 36" | 36" | ROAD WORK AHEAD | 5 |
| W20-2 | 36" | 36" | DETOUR AHEAD | 5 |

NOTES:

1. ALL TEMPORARY TRAFFIC CONTROL SIGNS AND DEVICES ALONG THE DETOUR ROUTE SHALL BE INSTALLED WITHIN THE EXISTING RIGHT OF WAY.
2. THE CONTRACTOR SHALL COORDINATE WITH THE TOWN FOR FINAL APPROVAL OF ALL DETOUR SIGN LOCATIONS. DETOUR SIGNS SHALL NOT CONFLICT WITH OTHER ONGOING CONSTRUCTION DETOURS.
3. MESSAGES ON PORTABLE CHANGEABLE MESSAGE SIGNS (PCMS) SHALL BE APPROVED BY THE TOWN.

Project:
GROVE STREET BRIDGE
UPTON, MA 01568

Weston & Sampson
Weston & Sampson Engineers, Inc.
100 Foxborough Boulevard, Suite 250
Foxborough, MA 02035
978.532.1900 800.SAMPSON
www.westonandsampson.com

Consultants:

Revisions:

| No. | Date | Description |
|---|---|---|
| | | |

COA:

Seal:
COMMONWEALTH OF MASSACHUSETTS
SCOTT R. BRUSO
STRUCTURAL
No. 48061
REGISTERED PROFESSIONAL ENGINEER
2026.05.26 14:50:37-04'00'

Issued For:
BID DOCUMENTS

Scale: AS NOTED

Date: MAY 27, 2026
Drawn By: CTC
Reviewed By: JLP
Approved By: DA
W&S Project No.: ENG22-1175
W&S File No.:

Drawing Title:
DETOUR PLAN

Sheet Number:
C-06

COPYRIGHT © 2021 WESTON & SAMPSON, INC.

P:\MA\Upton MA\Grove St. Bridge\CAD\2175.CA.01.100\Bridge\Project Drawing Data\Plan Sheet Data\Plan Sheet DWG\DETOUR PLAN.dwg

GENERAL NOTES:

1. PROVIDE A MINIMUM TUBE DIAMETER OF 12 INCHES FOR SLOPES UP TO 50 FEET IN LENGTH WITH A SLOPE RATIO OF 3H:1V OR STEEPER. LONGER SLOPES OF 3H:1V MAY REQUIRE LARGER TUBE DIAMETER OR ADDITIONAL COURSING OF FILTER TUBES TO CREATE A FILTER BERM. REFER TO MANUFACTURER'S RECOMMENDATIONS FOR SITUATIONS WITH LONGER OR STEEPER SLOPES.
2. INSTALL TUBES ALONG CONTOURS AND PERPENDICULAR TO SHEET OR CONCENTRATED FLOW.
3. DO NOT INSTALL IN PERENNIAL, EPHEMERAL OR INTERMITTENT STREAMS.
4. CONFIGURE TUBES AROUND EXISTING SITE FEATURES TO MINIMIZE SITE DISTURBANCE AND MAXIMIZE CAPTURE AREA OF STORMWATER RUN-OFF.
5. MULCH MATERIAL FOR THE FILTER TUBES SHALL BE WEED-FREE STRAW, WOOD EXCELSIOR, COMPOST, OR WOOD CHIPS, OR COIR. STRAW SHALL BE WEED FREE AND DERIVED FROM THRESHING OF GRAIN CROP.
6. CURVE ENDS UPHILL TO PREVENT DIVERSION OF UNFILTERED RUN-OFF.

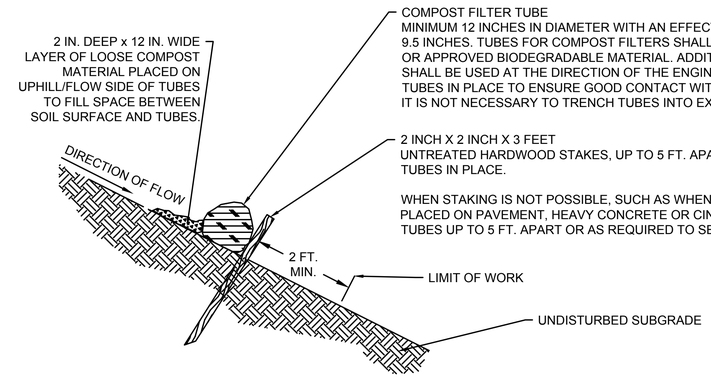


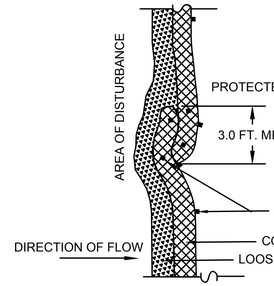


PROVIDE A 3 FT. MINIMUM OVERLAP AT ENDS OF TUBES TO JOIN IN A CONTINUOUS BARRIER AND MINIMIZE UNIMPEDED FLOW.
STAKE JOINING TUBES SNUGLY AGAINST EACH OTHER TO PREVENT UNFILTERED FLOW BETWEEN THEM.

SECURE ENDS OF TUBES WITH STAKES SPACED 18 IN. APART THROUGH TOPS OF TUBES.

PLAN VIEW - JOINING DETAIL

## 1 SEDIMENT CONTROL BARRIER

SCALE: N.T.S.

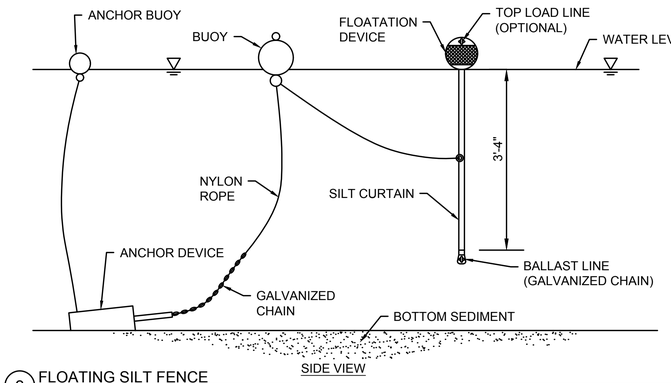


SIDE VIEW

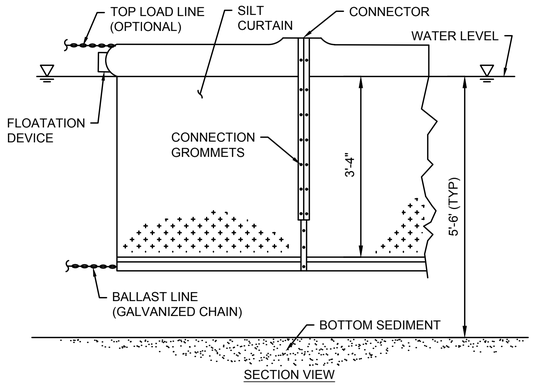


SECTION VIEW

## 2 FLOATING SILT FENCE

SCALE: N.T.S.

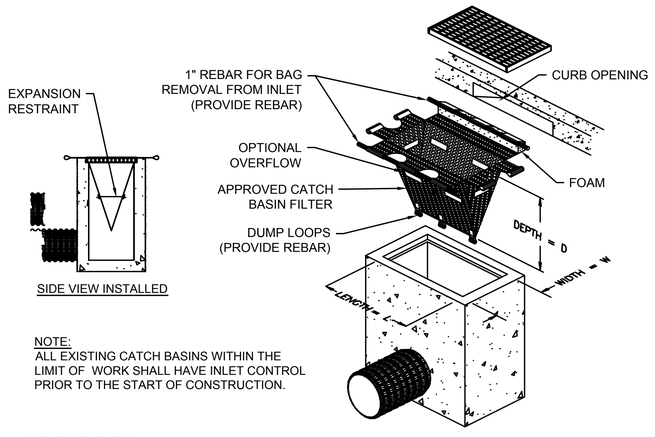


SIDE VIEW INSTALLED

NOTE:
ALL EXISTING CATCH BASINS WITHIN THE LIMIT OF WORK SHALL HAVE INLET CONTROL PRIOR TO THE START OF CONSTRUCTION.

## 3 SILT SACK

SCALE: N.T.S.

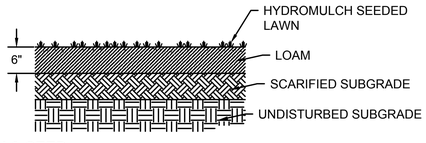


## 4 LOAM & SEED

SCALE: N.T.S.

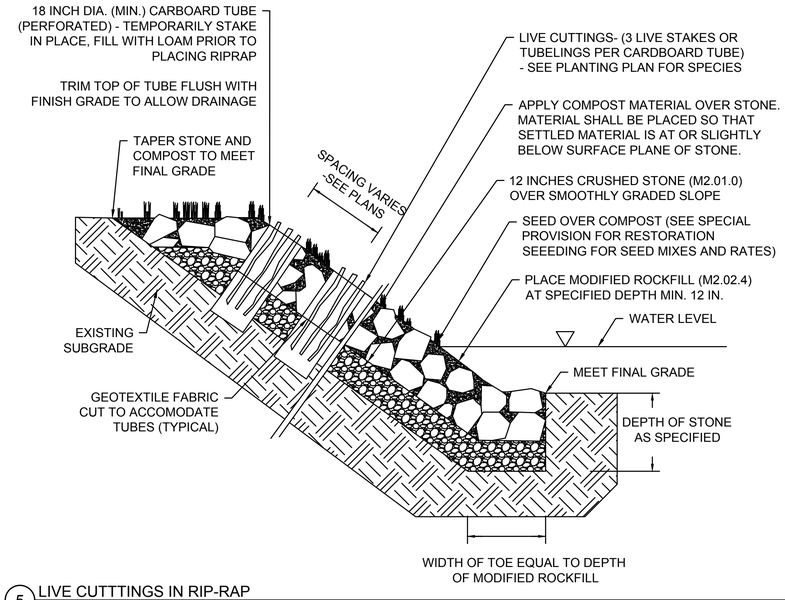


## 5 LIVE CUTTTINGS IN RIP-RAP

SCALE: N.T.S.

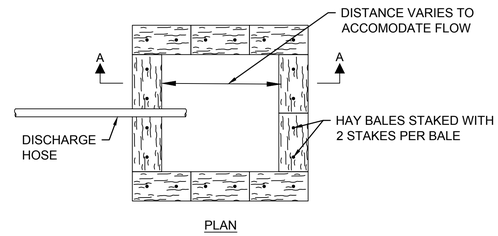


PLAN

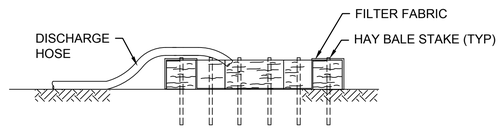


SECTION A-A

DEWATERING NOTES:

1. IF NEEDED A DEWATERING PLAN SHALL BE SUBMITTED FOR APPROVAL PRIOR TO CONSTRUCTION ACTIVITIES INVOLVING DEWATERING. A DEWATERING POOL SHALL BE LOCATED ON THE PLANS OR AS REQUIRED BY THE ENGINEER.
2. ALL EROSION CONTROL DEVICES, INCLUDING DEWATERING POOL SHALL BE IN PLACE PRIOR TO COMMENCEMENT OF ANY DEWATERING ACTIVITIES.
3. THE CONTRACTOR SHALL CLEAN AND MAINTAIN THE DEWATERING POOL ON A REGULAR BASIS. SEDIMENTS REMOVED FROM POOL SHALL BE DISPOSED ACCORDING TO DEP GUIDELINES AND ORDER OF CONDITIONS.
4. ANY DEWATERING OPERATIONS DEEMED NECESSARY BY THE CONTRACTOR OR REQUIRED BY THE ENGINEER SHALL BE INCIDENTAL TO THE PROJECT.
5. THE CONTRACTOR SHALL SUBMIT DEWATERING PLANS, DETAILED PUMP SIZING AND ASSOCIATED POOL SIZING TO THE ENGINEER PRIOR TO THE START OF WORK.

## 6 DEWATERING DISCHARGE DISPOSAL DETAIL

SCALE: N.T.S.

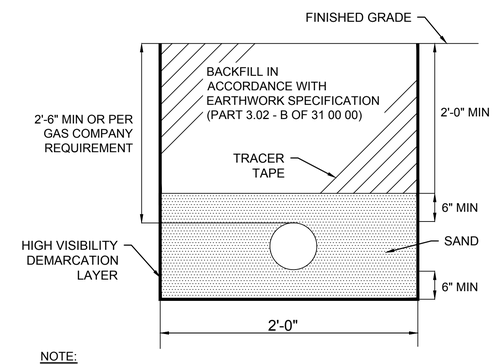


NOTE:
GAS LINE PROVIDED & INSTALLED BY UTILITY COMPANY FROM STREET TO METER. CONTRACTOR IS RESPONSIBLE FOR EXCAVATION AND BACKFILL

## 7 GAS TRENCH

SCALE: N.T.S.

Project:
GROVE STREET BRIDGE
UPTON, MA 01568


Weston & Sampson Engineers, Inc.
100 Foxborough Boulevard, Suite 250
Foxborough, MA 02035
978.532.1900 800.SAMPSON
www.westonandsampson.com


Consultants:

Revisions:

| No. | Date | Description |
|---|---|---|
| | | |

COA:

Seal:
COMMONWEALTH OF MASSACHUSETTS
SCOTT R. BRUSO
STRUCTURAL
No. 48061
REGISTERED PROFESSIONAL ENGINEER
2026.05.26 14:50:18-04'00'

Issued For:
BID DOCUMENTS

| | |
|---|---|
| Scale: | AS NOTED |
| Date: | MAY 27, 2026 |
| Drawn By: | CTC |
| Reviewed By: | JLP |
| Approved By: | DA |
| W&S Project No.: | ENG22-1175 |
| W&S File No.: | |

Drawing Title:
DETAILS
SHEET 1 OF 2

Sheet Number:
C-07


COPYRIGHT © 2021 WESTON & SAMPSON, INC.


P:\Mill\Upton Mill\Civil_Bridge\CAD\2021\TLCAD-100\Bridge\Plans\Drawing Sheet\Plan Sheet\Plan Sheet (100)\C07DETAILS.dwg

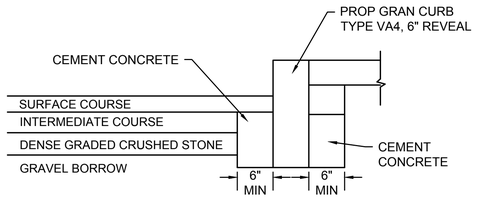


## 1 GRANITE CURB INSTALLATION IN FULL DEPTH PAVEMENT

SCALE: N.T.S.

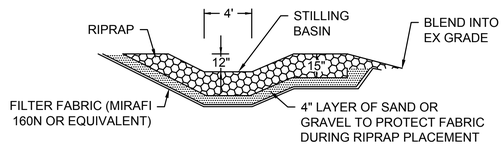


## 3 RIPRAP APRON

SCALE: N.T.S.

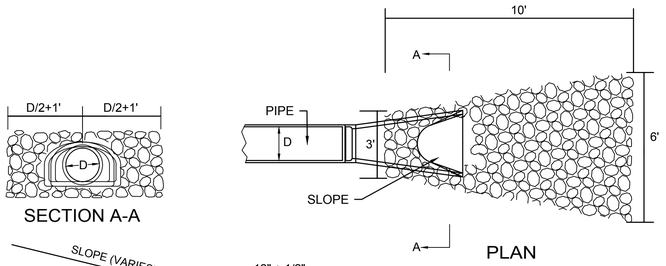


## 4 FLARED END PIPE

SCALE: N.T.S.

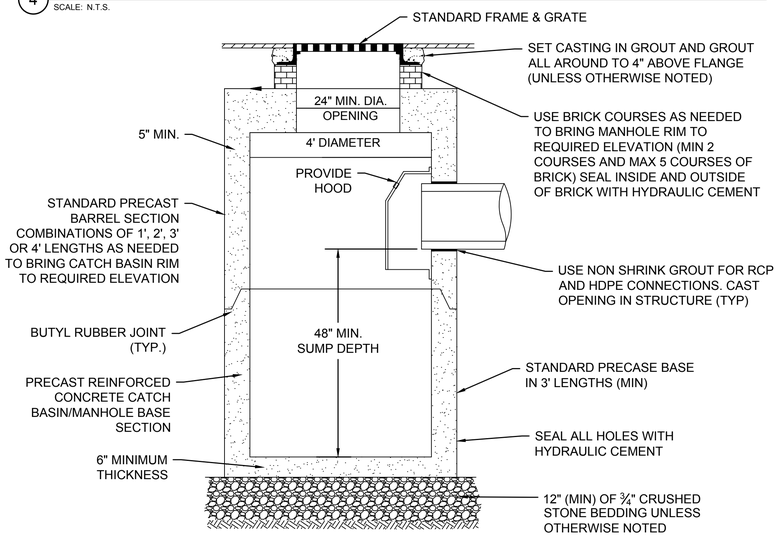


## 7 STANDARD CATCH BASIN

SCALE: N.T.S.

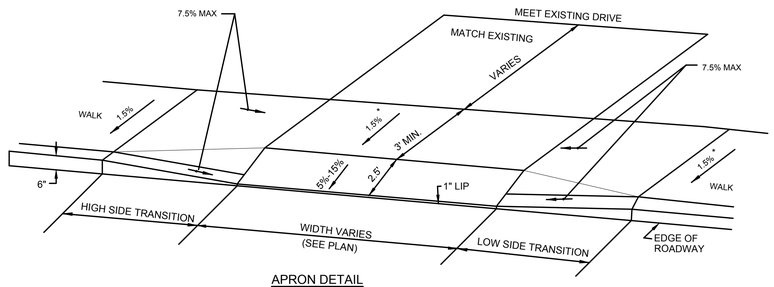


APRON DETAIL

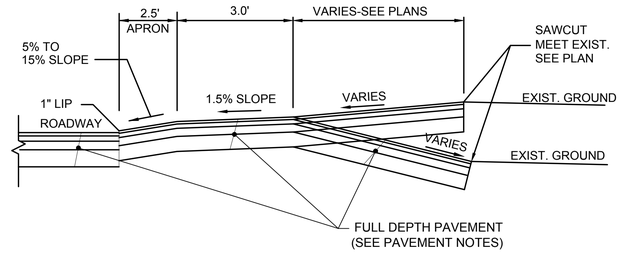


SECTION VIEW

## 2 HOT MIX ASPHALT DRIVE

SCALE: N.T.S.

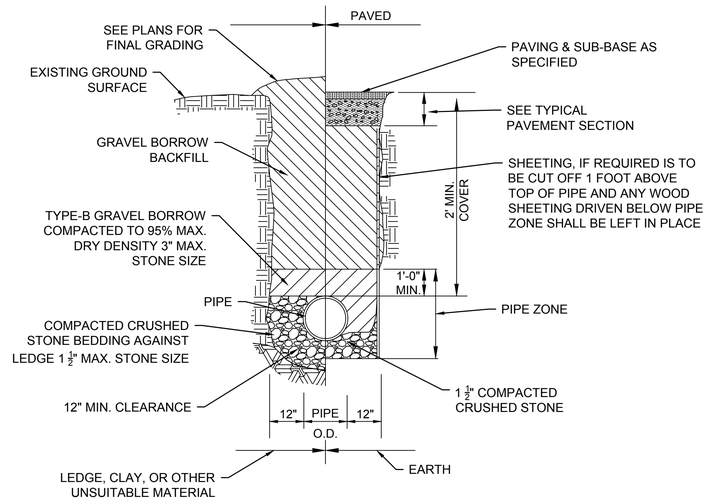


## 5 TYPICAL DRAINAGE PIPE TRENCH

SCALE: N.T.S.

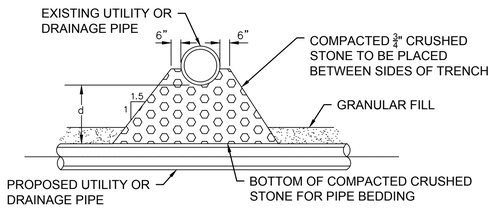


**CRUSHED STONE SUPPORT WHEN d≥12"**

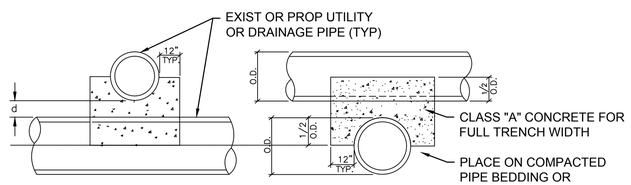


**CONCRETE PIPE CRADLE WHEN d<12"**

NOTES:
1. d = DISTANCE BETWEEN UTILITY AND DRAINAGE PIPES.
2. SUPPORTS SHALL BE INSTALLED WHERE SPECIFIED ON THE PLANS AND WHERE DIRECTED BY THE ENGINEER.
3. CRUSHED STONE SUPPORTS SHALL BE INCLUDED IN THE COST OF THE PROPOSED UTILITY OR DRAINAGE PIPE AND CONCRETE PIPE CRADLES SHALL BE PAID FOR AS "FIELD CONCRETE".

## 8 TYPICAL UTILITY SUPPORTS

SCALE: N.T.S.

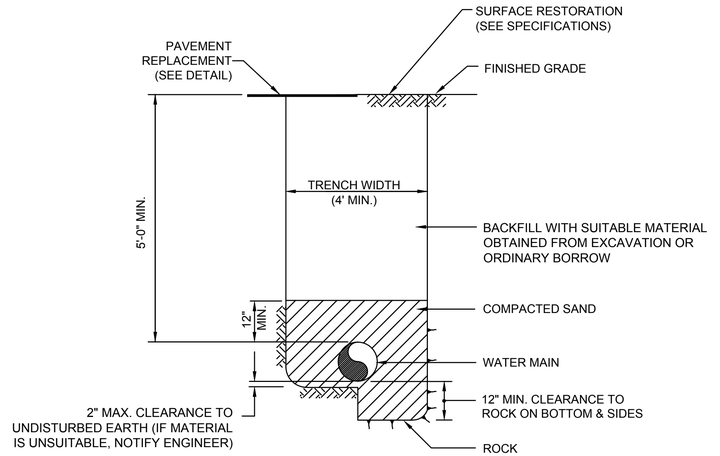


## 6 WATER MAIN TRENCH

SCALE: N.T.S.

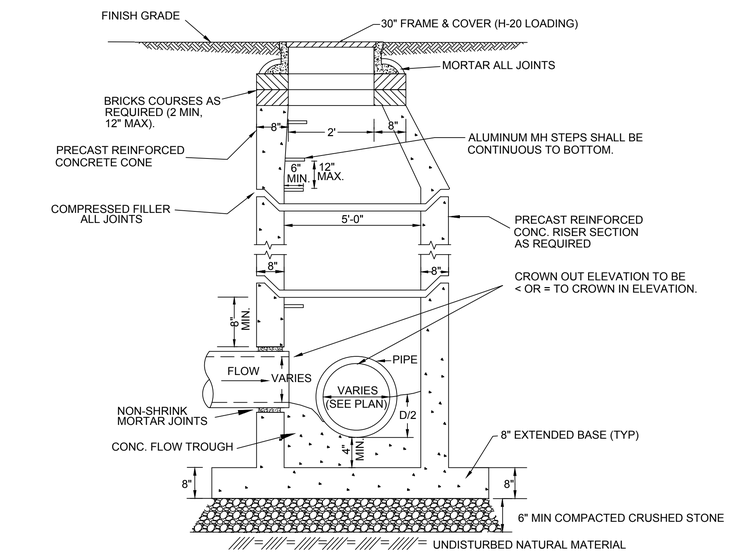


NOTE:
1. THE DRAIN MANHOLE SHALL BE DESIGNED TO RESIST BUOYANCY. ASSUMING GROUNDWATER IS AT GRADE, MANUFACTURER SHALL PROVIDE BUOYANCY CALCULATIONS, STAMPED BY A MASSACHUSETTS P.E.

2. MANHOLE FRAME AND COVER SHALL BE H-20 WHEEL LOAD RATED.

## 9 TYPICAL PRECAST CONCRETE MANHOLE

SCALE: N.T.S.


Project:
GROVE STREET BRIDGE
UPTON, MA 01568

Weston & Sampson

Weston & Sampson Engineers, Inc.
100 Foxborough Boulevard, Suite 250
Foxborough, MA 02035
978.532.1900 800.SAMPSON
www.westonandsampson.com

Consultants:


Revisions:

| No. | Date | Description |
|---|---|---|
| | | |
| | | |
| | | |
| | | |
| | | |
| | | |
| | | |
| | | |

COA:

Seal:
SCOTT R. BRUSO
STRUCTURAL
No. 48061
REGISTERED
PROFESSIONAL ENGINEER
2026.05.26 14:50:00-04'00'

Issued For:
BID DOCUMENTS

Scale: AS NOTED

Date: MAY 27, 2026
Drawn By: CTC
Reviewed By: JLP
Approved By: DA
W&S Project No.: ENG22-1175
W&S File No.:

Drawing Title:
DETAILS
SHEET 2 OF 2

Sheet Number:
C-08

COPYRIGHT © 2021 WESTON & SAMPSON, INC.

P:\MA\Upton MA\Grove St. Bridge\CAD\DETAILS\01 DWG\[Plan1]Drawing Date(Plan Sheet Date)(Plan Sheet Date)(TIMESTAMP).dwg

**NOTES**

1. PRIOR TO PLANTING, INVASIVE PLANTS SHALL BE IDENTIFIED BY A QUALIFIED PROFESSIONAL IN THE PLANTED AREA AND ADJACENT BANK, REMOVED BY MECHANICAL/HAND MEANS AND PROPERLY DISPOSED OF. GLYPHOSATE HERBICIDE SHOULD BE APPLIED TO STUMPS OF INVASIVE SHRUBS AND TREES 4 INCHES DIAMETER OR GREATER THAT ARE DIFFICULT TO REMOVE MECHANICALLY. TREATMENT SHOULD OCCUR BETWEEN MARCH 15TH AND AUGUST 30TH WHEN PLANTS ARE ACTIVELY GROWING AND AS CLOSE AS POSSIBLE TO TIME PERIOD RECOMMENDED BY MANUFACTURER FOR MAXIMUM EFFECTIVENESS. TREATMENT SHOULD OCCUR WITHIN 5 MINUTES OF CUTTING. ALL HERBICIDE APPLICATION SHALL BE PERFORMED IN COMPLIANCE WITH APPLICABLE LOCAL, STATE, AND FEDERAL REGULATIONS.

2. WHERE SUBSTRATE IS GRANULAR AND LACKS SUFFICIENT ORGANIC MATTER TO SUPPORT PLANT GROWTH, THE UPPER SIX INCHES SHALL BE REMOVED, SUBGRADE SCARIFIED, AND COVERED WITH SIX INCHES OF LOAM. IN ALL AREAS OF EXISTING SOIL TO BE REPLANTED OR RESEEDED, SOIL SHALL BE SCARIFIED PRIOR TO PLANTING/SEEDING.

3. PRIOR TO PLANTING, PROPOSED LOAM SHALL BE TESTED FOR TEXTURE, ORGANIC CONTENT, pH, CATION EXCHANGE CAPACITY (CEC), NITRATE, AND MACRONUTRIENTS AT UMASS SOILS LAB OR APPROVED EQUAL FACILITY, SOIL SHALL HAVE THE FOLLOWING CHARACTERISTICS:

- FINE SANDY LOAM
- ORGANIC CONTENT 4-8% MASS
- pH 5-6.5 CaCl2
- CEC. 5 TO 40 meq/100g
- NITRATE 30 TO 100 PPM
- MACRONUTRIENTS (P, K, Ca, Mg, S) SHOULD FALL WITHIN RECOMMENDED RANGE FOR NEW ENGLAND SOILS AS INDICATED BY SOILS LAB.
- CONTAMINANTS AND TOXINS SHOULD FALL WITHIN EPA PRG LEVELS. LEAD SHALL BE <22 PPM, ALUMINUM <75 PPM.
- INVASIVE WEED REPRODUCTIVE PARTS SHALL BE ABSENT.

PROPOSED LOAM SHALL BE AMENDED AS RECOMMENDED BY SOILS LAB BASED ON TEST RESULTS TO ACHIEVE PERFORMANCE CRITERIA SPECIFIED ABOVE PRIOR TO PLANTING.

4. CONTRACTOR SHALL PROVIDE NOTIFICATIONS AND COORDINATE WITH THE UPTON CONSERVATION COMMISSION AGENT AT ALL STAGES OF THIS WORK. PRIOR TO PLANTING, ALL PLANTING AREAS MUST BE REVIEWED AND APPROVED BY TOWN OF UPTON CONSERVATION AGENT. WORK NOT IN COMPLIANCE WILL BE REJECTED AND MUST BE CORRECTED PRIOR TO PLANTING.

5. CONTRACTOR SHALL CALL DIG-SAFE 811 AND FLAG ALL UTILITIES PRIOR TO PRELIMINARY LOCATION OF TREES AND SHRUBS.

6. CONTRACTOR SHALL PROVIDE LICENSED PROFESSIONAL SURVEY TO CONFIRM AREAS OF MITIGATION.

7. UNLESS OTHERWISE INDICATED, ARRANGE CONTAINER PLANTS IN IRREGULAR MASSES OF SAME SPECIES, 3 MIN PER MASS.

8. UNLESS OTHERWISE NOTED, PROVIDE MALE AND FEMALE PLANTS OF DIOECIOUS PLANTS, INCLUDING MYRICA PENSYLVANICA.

9. UNLESS OTHERWISE NOTED, ALL AREA DISTURBED BY CONSTRUCTION SHALL BE RETURNED TO ORIGINAL CONDITION. STRAW WATTLE SHALL BE REMOVED UPON ISSUANCE OF CERTIFICATE OF COMPLIANCE.

10. PROVIDE TEMPORARY IRRIGATION FOR ALL NEW PLANTING AND SEEDED AREAS UNTIL ESTABLISHMENT. CONTRACTOR SHALL PROVIDE AND PAY FOR ALL WATER USED.

11. PROVIDE TEMPORARY PROTECTIVE BOUNDARY OF PLASTIC OR WOOD STAKES AND STRING FOR ALL PLANTED AREAS THROUGH PLANT ESTABLISHMENT. REMOVE TEMPORARY BOUNDARY WITHIN 14 DAYS AFTER ISSUANCE OF A CERTIFICATE OF COMPLIANCE OR IF DIRECTED BY OWNER, TOWN AGENT OR LANDSCAPE ARCHITECT.

12. ONCE THE WORK IS COMPLETE, AREAS SHALL BE MONITORED TWO TIMES EACH YEAR (MID SPRING/MID FALL) TO ASSESS PLANTED SPECIES SURVIVAL, GROUND COVER ESTABLISHMENT AND INFESTATION BY INVASIVES. PRIOR TO ISSUANCE OF A CERTIFICATE OF COMPLIANCE, RESTORED AREAS SHALL ACHIEVE THE FOLLOWING: 100 PERCENT SURVIVAL OF TREE SPECIES, 75 PERCENT MINIMUM GROUND COVERAGE BY NATIVE PLANT SPECIESM AND 10 PERCENT MAXIMUM COVERAGE BY INVASIVE PLANTS OR VINES. IF THESE PERCENTAGES ARE NOT MAINTAINED, REPLANTING AND SEEDING WILL BE REQUIRED, INCLUDING MAINTENANCE AND WATERING UNTIL APPROVAL IS RECEIVED FROM THE UPTON CONSERVATION COMMISSION.

13. CONTRACTOR SHALL PROVIDE ONE YEAR WARRANTY ON ALL PLANTINGS AND MATERIALS FROM DATE OF CERTIFICATE OF COMPLIANCE.

14. RESTORATION AREA BOUNDARY MARKERS SHALL BE 4 INCH BY 4 INCH CONCRETE EMBEDDED 3 FT MINIMUM INTO THE GROUND AND EXTENDING 1 FT MINIMUM ABOVE FINISH GRADE. METAL NO DISTURB SIGNS SHALL BE AFFIXED TO TOP OF EACH BOUNDARY MARKER.

15. THIS PLAN WAS PREPARED BASED ON ORTHOPHOTOGRAPHY AND PROPERTY BOUNDARIES FROM STATE GIS DATA. LOCATIONS OF PROPERTY BOUNDARIES, TOP OF BANK, AND EDGE OF PAVEMENT AND SITE FEATURES ARE APPROXIMATE. DIMENSIONS SHOULD BE MEASURED AND ADJUSTED IN THE FIELD PRIOR TO COMMENCING WORK IN ORDER TO ACHIEVE INDICATED SQUARE FOOTAGE OF RESTORED AREA.

16. GRANULAR SUBSTRATE MATERIAL THAT MAY BE NEEDED AT THE TOP OF SLOPED AREAS AND AS INDICATED ON THIS PLAN SHALL BE CONSIDERED INCIDENTAL TO THE PROJECT. RELOCATION OF EXISTING BOULDERS OUT OF PLANTING AREA SHALL BE CONSIDERED INCIDENTAL TO THE PROJECT.

LEGEND

EXISTING TREE

PROPOSED TREE

RESTORATION AREA BOUNDARY MARKER

MITIGATION AREA SEED MIX SPECIES:
'NEW ENGLAND ROADSIDE MATRIX UPLAND' BY NEW ENGLAND WETLAND PLANTS OR APPROVED EQUAL

GRASSES (SEED)
- VIRGINIA WILD RYE (ELYMUS VIRGINICUS)
- LITTLE BLUESTEM (SCHIZACHYRIUM SCOPARIUM)
- RED FESCUE (FESTUCA RUBRA)
- BIG BLUESTEM (ANDROPOGON GERADII)
- INDIAN GRASS (SORGHASTRUM NUTANS)
- SWITCH GRASS (PANICUM VIRGATUM)

WILDFLOWERS (SEED)
- PARTRIDGE PEA (CHAMAECRISTA FASCICULATA)
- BUTTERFLY MILKWEED (ASCLEPIAS TUBEROSA)
- PANICLED TICK TREFOIL (DESMODIUM PANICULATUM)
- BEARD TONGUE (PENSTEMON DIGITALIS)
- BLACK EYED SUSAN (RUDBECKIA HIRTA)
- HOLLOWSTEM JOE PYE WEED (EUPATORIUM FISTULOSUM / EUTROCHIUM FISTULOSUM)

SHRUBS (SEED)
- GREY DOGWOOD (CORNUS RACEMOSA)
- SILKY DOGWOOD (CORNUS AMOMUM)
- STAGHORN SUMAC (RHUS TYPHINA)

**TREES**

| QTY | SYMBOL | SCIENTIFIC NAME | COMMON NAME | SIZE | CONDITION | SPACING |
|---|---|---|---|---|---|---|
| 2 | JV | JUNIPERUS VIRGINIANA | EASTERN RED CEDAR | 1" cal. | B & B | AS SHOWN |
| 4 | NS | NYSSA SYLVATICA | BLACK GUM | 1" cal. | B & B | AS SHOWN |
| 2 | QC | QUERCUS COCCINEA | SCARLET OAK | 1" cal. | B & B | AS SHOWN |
| 3 | AR | ACER RUBRUM | RED MAPLE | 1" cal. | B & B | AS SHOWN |
| 1 | SA | SASSAFRAS ALBIDUM | SASSAFRAS | 1" cal. | B & B | AS SHOWN |

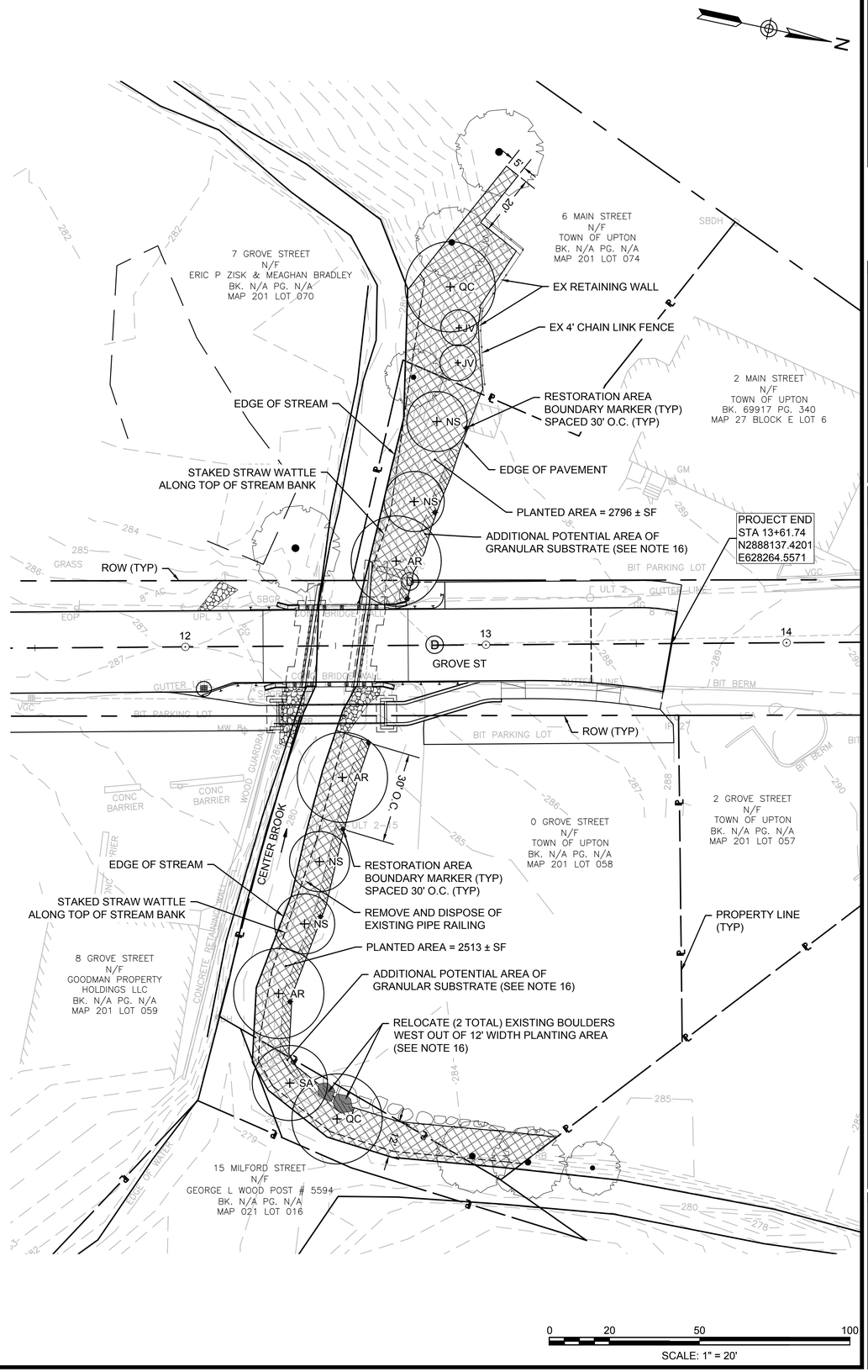


Project:
GROVE STREET BRIDGE
UPTON, MA 01568


Weston & Sampson

Weston & Sampson Engineers, Inc.
100 Foxborough Boulevard, Suite 250
Foxborough, MA 02035
978.532.1900 800.SAMPSON
www.westonandsampson.com


Consultants:

Revisions:

| No. | Date | Description |
|---|---|---|
| | | |
| | | |
| | | |
| | | |
| | | |
| | | |
| | | |
| | | |

COA:

Seal:
COMMONWEALTH OF MASSACHUSETTS
SCOTT R. BRUSO
STRUCTURAL
No. 48061
REGISTERED PROFESSIONAL ENGINEER
2026.05.26 14:49:38-04'00'

Issued For:
BID DOCUMENTS

Scale: AS NOTED

Date: MAY 27, 2026
Drawn By: CTC
Reviewed By: JLP
Approved By: DA

W&S Project No.: ENG22-1175
W&S File No.:

Drawing Title:
PLANTING PLAN

Sheet Number:
C-09


COPYRIGHT © 2021 WESTON & SAMPSON, INC.


P:\Multiple MA\Grove St Bridge\CAD\2217X.CAD.1905\sig\Project Drawings\DwgFile Sheet Files\Plot Sheet\SHEET-PLANTING PLAN.dwg

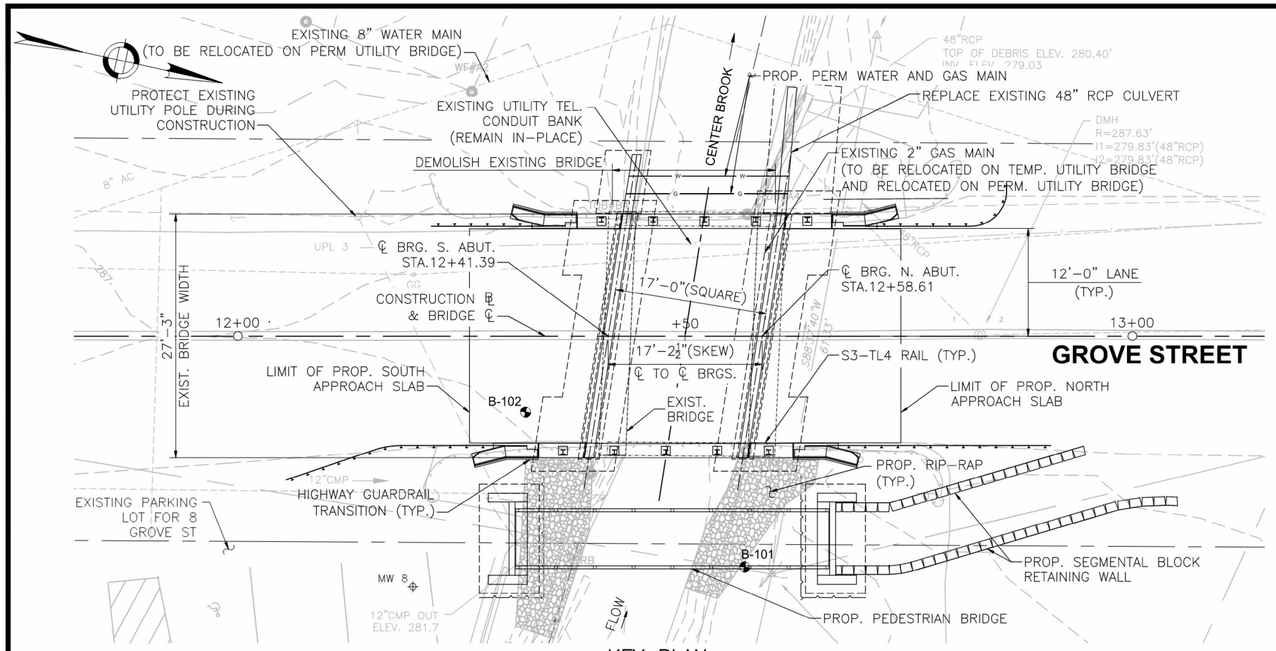


*WATER CONTROL NOT SHOWN FOR CLARITY. REFER TO SHEET S-06 AND S-07.

## KEY PLAN

SCALE: 1" = 8'

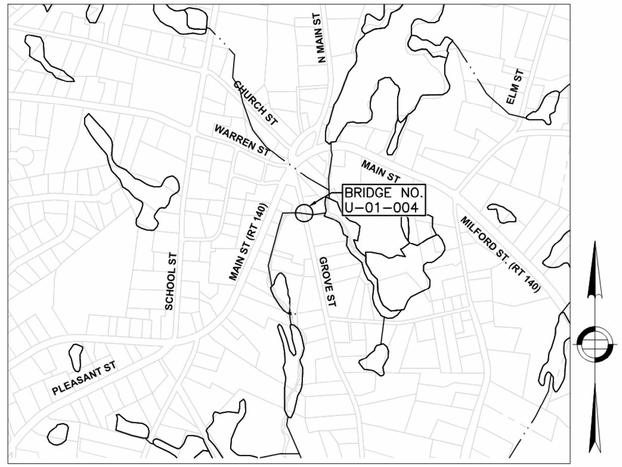


## LOCUS

SCALE: 1" = 500'

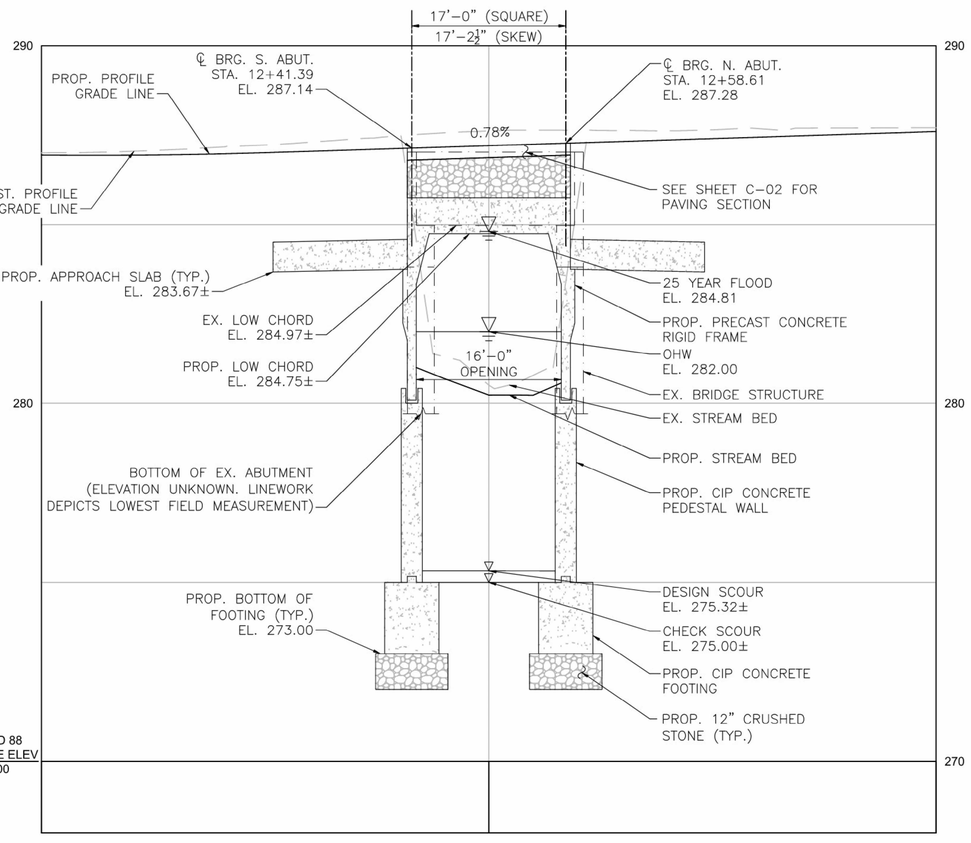


## PROFILE – GROVE ST

HORIZONTAL SCALE: 1" = 8'
VERTICAL SCALE: 1" = 2'

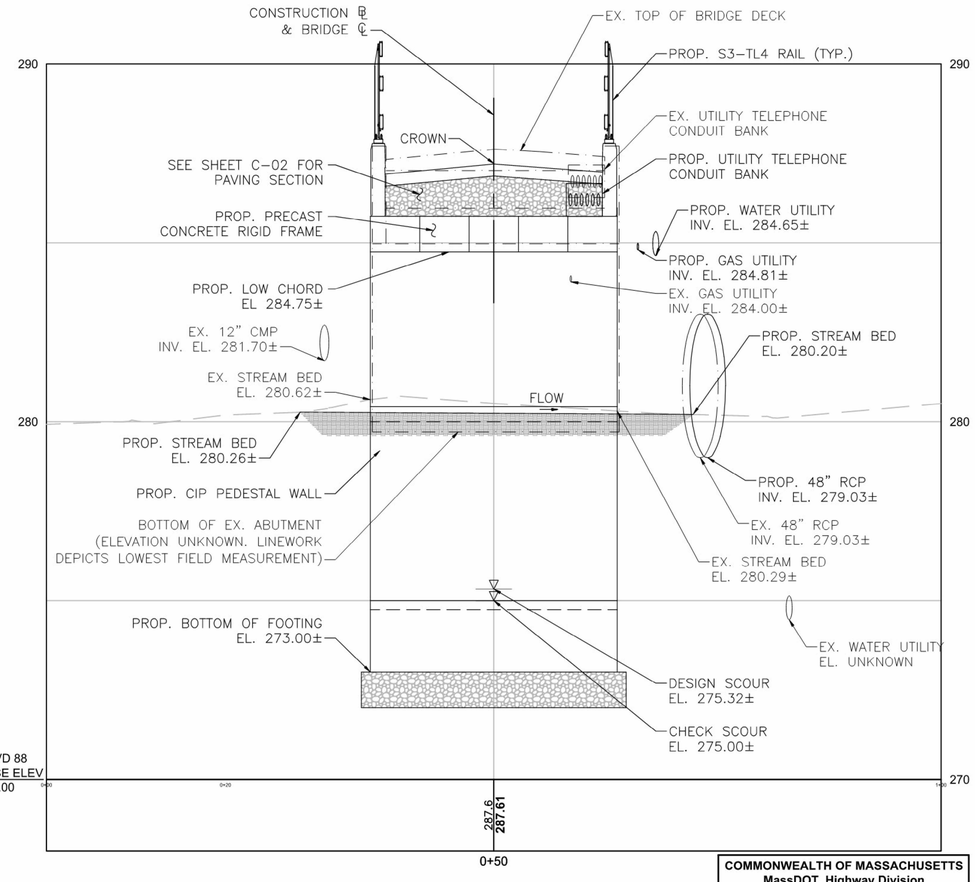


## PROFILE – CENTER BROOK

HORIZONTAL SCALE: 1" = 8'
VERTICAL SCALE: 1" = 2'

| * |
|---|
| CRH |
| CRJ |

**COMMONWEALTH OF MASSACHUSETTS**
**MassDOT, Highway Division**
CONCEPTUAL DESIGN IS ACCEPTABLE TO MASSDOT FOR CONTRACTING
Mohammed Nabulsi, P.E.
DISTRICT 3 BRIDGE ENGINEER — DATE

BRIDGE SHEET 01 OF 18. BRIDGE NO. U-01-004 (*)

P:\MA\Upton MA\Grove St. Bridge\CAD\01-100\Bridge\Plans\Drawing Data\Plan Sheet Data\Plan Sheet 01\MDBR1401-P1-MN.dwg

Project:
GROVE STREET BRIDGE
UPTON, MA 01568

Weston & Sampson
Weston & Sampson Engineers, Inc.
100 Foxborough Boulevard, Suite 250
Foxborough, MA 02035
978.532.1900 800.SAMPSON
www.westonandsampson.com

Consultants:

Revisions:

| No. | Date | Description |
|---|---|---|
| | | |
| | | |
| | | |
| | | |
| | | |
| | | |
| | | |
| | | |

COA:

Seal:
COMMONWEALTH OF MASSACHUSETTS
SCOTT R. BRUSO
STRUCTURAL
No. 40061
REGISTERED PROFESSIONAL ENGINEER
2025.03.24 16:29:51-04'00'

Issued For:
BIDDING

Scale: AS NOTED

| | |
|---|---|
| Date: | MARCH 2025 |
| Drawn By: | SAP |
| Reviewed By: | BM/RPM |
| Approved By: | SRB |
| W&S Project No.: | ENG22-1175 |
| W&S File No.: | |

Drawing Title:
KEY PLAN

Sheet Number:
S-01

COPYRIGHT © 2021 WESTON & SAMPSON, INC.

## GENERAL NOTES:

### DESIGN:

IN ACCORDANCE WITH THE 2020 AMERICAN ASSOCIATION OF STATE HIGHWAY AND TRANSPORTATION OFFICIALS LRFD BRIDGE DESIGN SPECIFICATIONS FOR HL93 LOADING.

### EXISTING BRIDGE PLANS:

EXISTING BRIDGE PLANS ARE NOT AVAILABLE FOR THIS STRUCTURE.

### EXISTING CONDITIONS:

DIMENSIONS SHOWN AND DETAILED ARE BASED UPON SURVEY INFORMATION AND ARE NOT GUARANTEED. EXISTING BRIDGE PLANS CAN NOT BE LOCATED. THE CONTRACTOR SHALL DETERMINE AND ESTABLISH ALL DIMENSIONS AND DETAILS NECESSARY FOR COMPLETION OF ALL WORK BY FIELD MEASUREMENT AND SURVEY. THE CONTRACTOR SHALL BE RESPONSIBLE AND NOT ORDER ANY MATERIAL OR COMMENCE ANY FABRICATION UNTIL HE/SHE HAS MADE THE REQUIRED MEASUREMENTS ON THE ACTUAL STRUCTURE AND THE EXTENT OF THE PROPOSED WORK HAS BEEN APPROVED BY THE ENGINEER.

GEOTECHNICAL BORINGS IN THE VICINITY OF THE BRIDGE HAVE BEEN COLLECTED. BRIDGE BORING LOGS ARE SHOWN ON SHEET S–03.

### BENCHMARK:

S.W. NAIL IN UTILITY POLE, STA. 11+14 LT. EL=288.87
N.W. NAIL IN UTILITY POLE, STA. 13+33 LT. EL=288.95

ELEVATIONS ARE BASED ON THE NORTH AMERICAN VERTICAL DATUM (NAVD) OF 1988.

### DATE:

TO BE PLACED ON THE INSIDE FACE OF THE NORTHWEST AND SOUTHEAST HIGHWAY GUARDRAIL TRANSITIONS. A SHEET SHOWING SIZE AND CHARACTER OF NUMERALS WILL BE FURNISHED. THE DATE USED SHALL BE THE LATEST YEAR OF CONTRACT COMPLETION AS OF THE DATE THE FIRST HIGHWAY GUARDRAIL TRANSITION IS CONSTRUCTED. BOTH HIGHWAY GUARDRAIL TRANSITIONS SHALL FEATURE THE SAME DATE.

### MASSDOT SURVEY NOTEBOOKS:

ELECTRONIC SURVEY PREPARED BY CHAPPELL ENGINEERING ASSOCIATES. PRODUCED ORIGINALLY ON FEBRUARY 17, 2023 AND UPDATED ON MAY 3, 2023.

COORDINATES, IN US SURVEY FEET, ARE REFERENCED TO THE NORTH AMERICAN DATUM OF 1983 (NAD 83/2011, EPOCH 2010.00).

### SCALES:

SCALES NOTED ON THE PLANS ARE NOT APPLICABLE TO REDUCED SIZE PRINTS. DIVIDE SCALES BY 2 FOR HALF–SIZE PRINTS (A3).

### FOUNDATIONS:

FOUNDATIONS MAY BE ALTERED, IF NECESSARY, TO SUIT CONDITIONS ENCOUNTERED DURING CONSTRUCTION, WITH THE APPROVAL OF THE ENGINEER. REFER TO GEOTECHNICAL REPORT BY WSE DATED JANUARY 3, 2025.

### UNSUITABLE MATERIAL:

ALL UNSUITABLE MATERIAL SHALL BE REMOVED WITHIN THE LIMITS OF THE FOUNDATIONS OF THE STRUCTURE, AS DIRECTED BY THE ENGINEER.

### CONCRETE:

ALL CONCRETE SHALL BE 5000 HP CONCRETE EXCEPT AS NOTED BELOW:

| (1) | (2) | (3) | TO BE USED IN CONSTRUCTION OF: |
|---|---|---|---|
| 4000 | ¾" | 585 HP | DECK SLAB |
| 4000 | 1½" | 565 | APPROACH SLABS, FOOTINGS, WINGWALLS, ABUTMENTS RETAINING WALLS, PEDESTAL WALLS, AND 48" HEADWALL |
| 5000 | ¾" | 685 HP | PRECAST HIGHWAY GUARDRAIL TRANSITIONS, SAFETY CURBS, AND PRECAST RIGID FRAMES |

(1) 28 DAY COMPRESSIVE STRENGTH (PSI)
(2) MAXIMUM AGGREGATE SIZE (IN)
(3) CEMENTITIOUS CONTENT (LB/CY)

### UTILITIES:

THE CONTRACTOR SHALL LOCATE AND PROTECT FROM DAMAGE ALL EXISTING UTILITIES. THE CONTRACTOR SHALL COORDINATE AND COOPERATE WITH THE RESPECTIVE UTILITY OWNERS FOR ALL UTILITIES TO BE TEMPORARILY OR PERMANENTLY RELOCATED. THE GAS MAIN SHALL BE RELOCATED TO A TEMPORARY UTILITY BRIDGE DURING BRIDGE CONSTRUCTION AND RELOCATED TO THE PERMANENT UTILITY BRIDGE AFTER BRIDGE CONSTRUCTION. THE WATER UTILITY WILL REMAIN IN–PLACE DURING BRIDGE CONSTRUCTION AND RELOCATED TO THE PERMANENT BRIDGE AFTER BRIDGE CONSTRUCTION. THE CONDUIT BANK UTILITY WILL BE SUPPORTED IN–PLACE DURING CONSTRUCTION.

### MEMBRANE WATERPROOFING:

ALL MEMBRANE WATERPROOFING USED ON BRIDGE DECKS SHALL BE MEMBRANE WATERPROOFING FOR BRIDGE DECKS – SPRAY APPLIED.

## REINFORCEMENT:

1. REINFORCING STEEL SHALL CONFORM TO THE REQUIREMENTS OF AASHTO M31 GRADE 60. UNLESS OTHERWISE NOTED ON THE CONSTRUCTION DRAWINGS, ALL BARS SHALL BE LAPPED AS FOLLOWS:

| MODIFICATION CONDITION | #4 BARS | #5 BARS | #6 BARS | #7 BARS |
|---|---|---|---|---|
| 1. NONE | 16" | 17" | 21" | 30" |
| 2. 12" OF CONCRETE BELOW BAR | 18" | 22" | 27" | 39" |
| 3. COATED BARS, COVER < $3d_b$, OR CLEAR SPACING < $6d_b$ | 21" | 26" | 31" | 43" |
| 4. COATED BARS, ALL OTHER CASES | 17" | 21" | 25" | 37" |
| 5. CONDITION 2. AND 3. | 23" | 29" | 35" | 51" |
| 6. CONDITION 2. AND 4. | 21" | 27" | 32" | 47" |

ALL OTHER BARS SHALL BE LAPPED AS SHOWN ON THE CONSTRUCTION DRAWINGS.

2. ALL REINFORCING BARS AND SUPPORTING DEVICES SHALL BE EPOXY COATED UNLESS OTHERWISE NOTED.

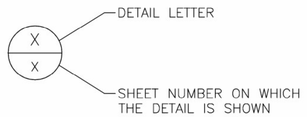


DETAIL MARK

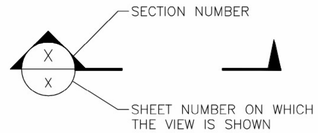


SECTION MARK

## PRECAST CONCRETE RIGID FRAME NOTES:

THE CONTRACTOR SHALL SUBMIT DESIGN COMPUTATIONS FOR THE PRECAST CONCRETE RIGID FRAME AND HEADWALL ELEMENTS TO THE ENGINEER FOR REVIEW AND APPROVAL. THE COMPUTATIONS SHALL BE PREPARED IN ACCORDANCE WITH THE LATEST AASHTO LFRD BRIDGE DESIGN SPECIFICATIONS AND THE PLANS USING ENGLISH UNITS AND HL–93 LIVE LOADING. ONE SET OF REVIEWED COMPUTATIONS SHALL BE SUBMITTED FOR APPROVAL. THE DESIGN COMPUTATIONS SHALL CONSIDER ALL STRENGTH, EXTREME EVENT AND SERVICE LIMIT STATES AS ARE APPROPRIATE FOR EACH STAGE OF FABRICATION, SHIPMENT, CONSTRUCTION, AND FOR THE FINAL IN–SERVICE CONDITION. DESIGN COMPUTATIONS AND SHOP DRAWINGS SHALL BE PREPARED AND STAMPED BY A PROFESSIONAL ENGINEER LICENSED TO PRACTICE IN THE COMMONWEALTH OF MASSACHUSETTS.

THE FRAME DIMENSIONS PROVIDED ON THE PLANS ARE SHOWN TO ESTABLISH THE SIZE OF THE PROPOSED HYDRAULIC OPENING. THE WIDTH AND THICKNESS OF EACH FRAME UNIT MAY VARY DEPENDING UPON THE MANUFACTURER'S SPECIFICATIONS PROVIDED THAT THE HYDRAULIC OPENING SIZE IS MAINTAINED. THE CONTRACTOR SHALL BE RESPONSIBLE FOR MODIFYING THE DIMENSIONS OF THE FRAME BRIDGE ELEMENTS TO COMPENSATE FOR ELASTIC SHORTENING, SHRINKAGE, GRADE CORRECTIONS, AND OTHER PHENOMENA THAT MAKE IN–PROCESS FABRICATING DIMENSIONS DIFFERENT FROM THOSE SHOWN ON THE DRAWINGS. APPROVAL OF THE SHOP DRAWINGS SHALL NOT RELIEVE THE CONTRACTOR FROM RESPONSIBILITY FOR THE CORRECTNESS OF THE DIMENSIONS SHOWN.

THE PRECAST CONCRETE RIGID FRAME AND ASSOCIATED SUBSTRUCTURE COMPONENTS SHALL BE CONSTRUCTED IN ACCORDANCE WITH THE BRIDGE SKEW ANGLE AS SHOWN ON THE PLANS. ANY MODIFICATIONS TO GEOMETRY WILL REQUIRE WRITTEN APPROVAL FROM THE ENGINEER PRIOR TO FABRICATION.

THE DESIGN OF THE FOOTING DETAILS HEREIN IS BASED UPON THE ASSUMED GEOMETRY OF THE UNITS SHOWN. SHOULD THE GEOMETRY OF THE PRECAST UNITS VARY FROM THAT SPECIFIED ON THE PLANS, THE CONTRACTOR SHALL IMMEDIATELY NOTIFY THE ENGINEER TO DETERMINE WHETHER ADJUSTMENTS TO THE ABUTMENTS ARE REQUIRED.

ALL FOOTINGS AND WINGWALLS SHALL BE CAST–IN–PLACE CONCRETE AS SHOWN ON THE PLANS.

| SEISMIC DESIGN CRITERIA | |
|---|---|
| DESIGN RETURN PERIOD: | 1000 |
| **DESIGN SPECTRA** | |
| As | 0.104G |
| SDs | 0.224G |
| SD1 | 0.091G |
| SITE CLASS | D |
| SEISMIC DESIGN CATEGORY (SDC) | A |

| HYDRAULIC DESIGN DATA | |
|---|---|
| DRAINAGE AREA (SQ. MILES) | 4.32 |
| DESIGN FLOOD DISCHARGE (C.F.S.) | 250 |
| DESIGN FLOOD FREQUENCY (YEARS) | 25 |
| DESIGN FLOOD VELOCITY (F.P.S.) | 4.45 |
| DESIGN FLOOD ELEVATION (FEET, NAVD) | 284.81 |
| **BASE (100–YEAR) FLOOD DATA** | |
| BASE FLOOD DISCHARGE (C.F.S.) | 360 |
| BASE FLOOD ELEVATION (FEET, NAVD) | 287.16 |
| **DESIGN AND CHECK SCOUR DATA** | |
| DESIGN SCOUR FLOOD EVENT RETURN FREQUENCY (YEARS) | 50 |
| DESIGN FLOOD ABUTMENT SCOUR DEPTH (FEET) | 4.88 |
| DESIGN FLOOD PIER SCOUR DEPTH (FEET) | N/A |
| CHECK SCOUR FLOOD EVENT RETURN FREQUENCY (YEARS) | 100 |
| CHECK FLOOD ABUTMENT SCOUR DEPTH (FEET) | 5.20 |
| CHECK FLOOD PIER SCOUR DEPTH (FEET) | N/A |
| **FLOOD OF RECORD** | |
| DISCHARGE (C.F.S.) | UNKNOWN |
| FREQUENCY (IF KNOWN, YEARS) | UNKNOWN |
| MAXIMUM ELEVATION (FEET, NAVD) | UNKNOWN |
| DATE (MM/YYYY) | UNKNOWN |
| HISTORY OF ICE FLOES | UNKNOWN |
| EVIDENCE OF SCOUR AND EROSION | UNKNOWN |

| TEMPORARY WATER CONTROL DESIGN DATA | |
|---|---|
| DESIGN FLOOD DISCHARGE (C.F.S.) | 80 |
| DESIGN FLOOD FREQUENCY (YEARS) | 2 |
| DESIGN FLOOD VELOCITY (F.P.S.) | 9.0 |
| DESIGN FLOOD ELEVATION (FEET, NAVD) | 285.25 |

REFER TO HYDRAULIC REPORT REV3 BY WSE DATED MARCH 4, 2025.

## CHAPTER 85 SECTION 35 REVIEW AND APPROVAL

IN ACCORDANCE AND COMPLIANCE WITH THE REQUIREMENTS OF CHAPTER 85 SECTION 35 OF THE MASSACHUSETTS GENERAL LAWS, THE CONTRACTOR SHALL SUBMIT TO THE MASSACHUSETTS DEPARTMENT OF TRANSPORTATION ALL CONSTRUCTION DRAWINGS AND DESIGN CALCULATIONS THAT SHALL BE USED TO FABRICATE AND CONSTRUCT THE STRUCTURE DENOTED ON THESE PLANS FOR REVIEW AND APPROVAL. THE APPROVAL SHALL CONSTITUTE THE FINAL APPROVAL AS STIPULATED BY CHAPTER 85 SECTION 35 OF THE MASSACHUSETTS GENERAL LAWS.

| * |
|---|
| CRH |
| CRJ |

**COMMONWEALTH OF MASSACHUSETTS**
**MassDOT, Highway Division**
CONCEPTUAL DESIGN IS ACCEPTABLE TO MASSDOT FOR CONTRACTING
Mohammed Nabeeli, P.E.
DISTRICT 3 BRIDGE ENGINEER — DATE

BRIDGE SHEET 02 OF 18. BRIDGE NO. U-01-004 (*)

Project:
GROVE STREET BRIDGE
UPTON, MA 01568


Weston & Sampson Engineers, Inc.
100 Foxborough Boulevard, Suite 250
Foxborough, MA 02035
978.532.1900 800.SAMPSON
www.westonandsampson.com


Consultants:

Revisions:

| No. | Date | Description |
|---|---|---|
| | | |

COA:

Seal:
COMMONWEALTH OF MASSACHUSETTS
SCOTT R. BRUSO
STRUCTURAL
No. 48061
REGISTERED PROFESSIONAL ENGINEER
2025.03.24 16:29:14-04'00'

Issued For:
BIDDING

Scale: AS NOTED

Date: MARCH 2025
Drawn By: SAP
Reviewed By: BM/RPM
Approved By: SRB

W&S Project No.: ENG22-1175
W&S File No.:

Drawing Title:
GENERAL NOTES

Sheet Number:
S-02

COPYRIGHT © 2021 WESTON & SAMPSON, INC.

P:\MA\Upton MA\Grove St. Bridge\ACAD\215 CAD 1500sge\Sheet Drawing Data\Plot Sheet Files\Plot Sheet DWG\BRIDGE\GENERAL NOTES1.dwg

Weston & Sampson

**Grove Street Bridge**
**Grove Street, Upton, MA**

**BORING ID: B-101**

**WSE Project: ENG22-1175** — Page 1 of 2

| | | | | | |
|---|---|---|---|---|---|
| CONTRACTOR: | Technical Drilling Services, Inc. | BORING LOCATION: | See Attached Figure | DATE START: | November 29, 2022 |
| FOREMAN: | Darwin Newton | ADVANCE METHOD: | Hollow-Stem Auger to Rotary Wash | DATE FINISH: | November 29, 2022 |
| LOGGED BY: | A. Chabot | AUGER DIAMETER: | 4-1/4" ID (Stem), 7-5/8" OD (Flights) | GROUND EL: | 286.0 ± (NAVD88) |
| CHECKED BY: | S. Spink, PE | SUPPORT CASING: | Driven Flush-Joint Casing (4" ID) | FINAL DEPTH: | 50.0 ft. |
| EQUIPMENT: | CME 75, Truck Mounted | CORING METHOD: | N/A | GRID COORDS: | N/A |
| SPT HAMMER: | Automatic (140-lb.) | BACKFILL MATERIAL: | Drill Cuttings | GRID SYSTEM: | N/A |

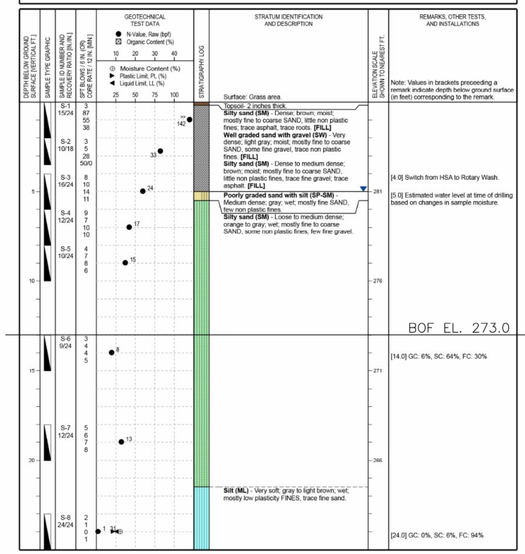


*Refer to the attached index sheets for important information about this log including general notes, legends, and guidance on description methods and procedures.*

Weston & Sampson

**Grove Street Bridge**
**Grove Street, Upton, MA**

**BORING ID: B-101**

**WSE Project: ENG22-1175** — Page 2 of 2

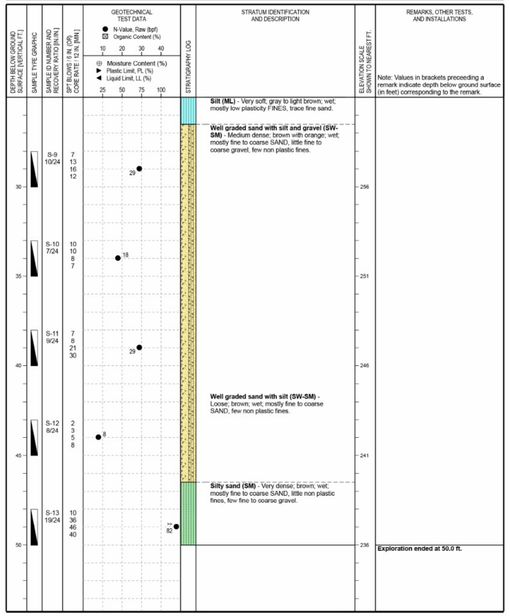


*Refer to the attached index sheets for important information about this log including general notes, legends, and guidance on description methods and procedures.*

## BORING NOTES:

1. LOCATION OF BORING SHOWN ON THE PLAN:
2. BORINGS ARE TAKEN FOR PURPOSE OF DESIGN AND SHOW CONDITIONS AT BORING POINTS ONLY, BUT DO NOT NECESSARILY SHOW THE NATURE OF THE MATERIALS TO BE ENCOUNTERED DURING CONSTRUCTION.
3. DUE TO THE DRIVE–AND–WASH DRILLING TECHNIQUES, THE DEPTH TO THE GROUNDWATER LEVELS OBTAINED DURING DRILLING DO NOT NECESSARILY SHOW THE TRUE GROUND WATER LEVEL.
4. FIGURES IN COLUMNS INDICATE NUMBER OF BLOWS REQUIRED TO DRIVE A 2" I.D. SPLIT SPOON SAMPLER 24" USING A 140 POUND WEIGHT FALLING 30".
5. BORINGS WERE PERFORMED ON NOVEMBER 28, 2022 AND NOVEMBER 29, 2022.
6. BORINGS WERE PERFORMED BY TECHNICAL DRILLING SERVICES, INC. OF STERLING, MASSACHUSETTS.
7. THE NORTH AMERICAN VERTICAL DATUM (NAVD) OF 1988 IS USED THROUGHOUT.

Weston & Sampson

**Grove Street Bridge**
**Grove Street, Upton, MA**

**BORING ID: B-102**

**WSE Project: ENG22-1175** — Page 1 of 2

| | | | | | |
|---|---|---|---|---|---|
| CONTRACTOR: | Technical Drilling Services, Inc. | BORING LOCATION: | See Attached Figure | DATE START: | November 28, 2022 |
| FOREMAN: | Darwin Newton | ADVANCE METHOD: | Rotary Wash Drilling | DATE FINISH: | November 28, 2022 |
| LOGGED BY: | A. Chabot | AUGER DIAMETER: | N/A | GROUND EL: | 287.5 ± (NAVD88) |
| CHECKED BY: | S. Spink, PE | SUPPORT CASING: | Driven Flush-Joint Casing (3" ID) | FINAL DEPTH: | 43.5 ft. |
| EQUIPMENT: | CME 75, Truck Mounted | CORING METHOD: | N/A | GRID COORDS: | N/A |
| SPT HAMMER: | Automatic (140-lb.) | BACKFILL MATERIAL: | Drill Cuttings and Asphalt Patch | GRID SYSTEM: | N/A |

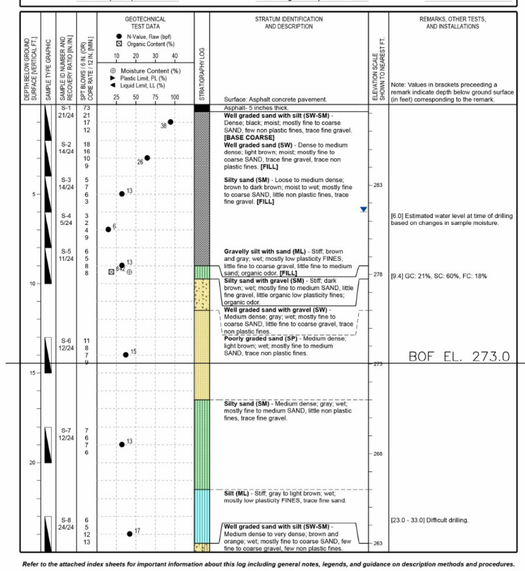


*Refer to the attached index sheets for important information about this log including general notes, legends, and guidance on description methods and procedures.*

Weston & Sampson

**Grove Street Bridge**
**Grove Street, Upton, MA**

**BORING ID: B-102**

**WSE Project: ENG22-1175** — Page 2 of 2

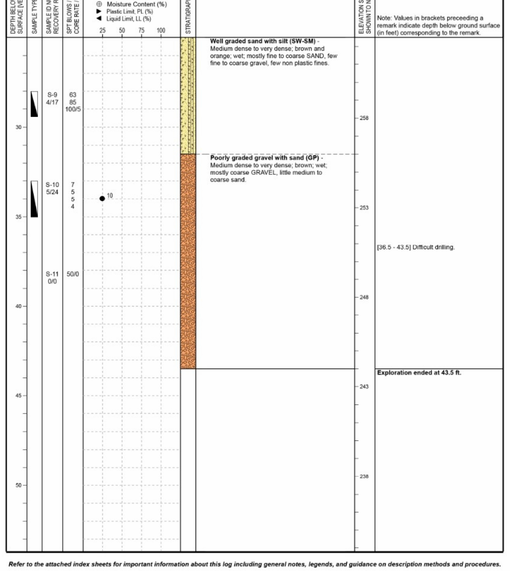


*Refer to the attached index sheets for important information about this log including general notes, legends, and guidance on description methods and procedures.*

Project:
GROVE STREET BRIDGE
UPTON, MA 01568

TOWN OF UPTON INCORPORATED JUNE 14, 1735 MASSACHUSETTS


Weston & Sampson

Weston & Sampson Engineers, Inc.
100 Foxborough Boulevard, Suite 250
Foxborough, MA 02035
978.532.1900 800.SAMPSON
www.westonandsampson.com


Consultants:

Revisions:

| No. | Date | Description |
|---|---|---|
| | | |
| | | |
| | | |
| | | |
| | | |
| | | |
| | | |
| | | |

COA:

Seal:

COMMONWEALTH OF MASSACHUSETTS
SCOTT R. BRUSO
STRUCTURAL
No. 48061
REGISTERED PROFESSIONAL ENGINEER
2025.03.24 16:28:46-04'00'

Issued For:
BIDDING

Scale: AS NOTED

| | |
|---|---|
| Date: | MARCH 2025 |
| Drawn By: | SAP |
| Reviewed By: | BM/RPM |
| Approved By: | SRB |
| W&S Project No.: | ENG22-1175 |
| W&S File No.: | |

Drawing Title:
BORING LOGS

Sheet Number:
S-03

| * |
|---|
| CRH |
| CRJ |

**COMMONWEALTH OF MASSACHUSETTS**
**MassDOT, Highway Division**
CONCEPTUAL DESIGN IS ACCEPTABLE TO MASSDOT FOR CONTRACTING
Mohammed Nabulsi, P.E.
Mohammed Nabulsi, P.E. (Nov 25, 2025 10:08 EST)
DISTRICT 3 BRIDGE ENGINEER — DATE

BRIDGE SHEET 03 OF 18. BRIDGE NO. U-01-004 (*)


COPYRIGHT © 2021 WESTON & SAMPSON, INC.


P:\MA\Upton MA\Grove St. Bridge\CAD\27I_1X36\per\Phase\Drawing Data\Plan Sheet Data\Plan Sheet (TW)\BORE\BORING LOGS.dwg

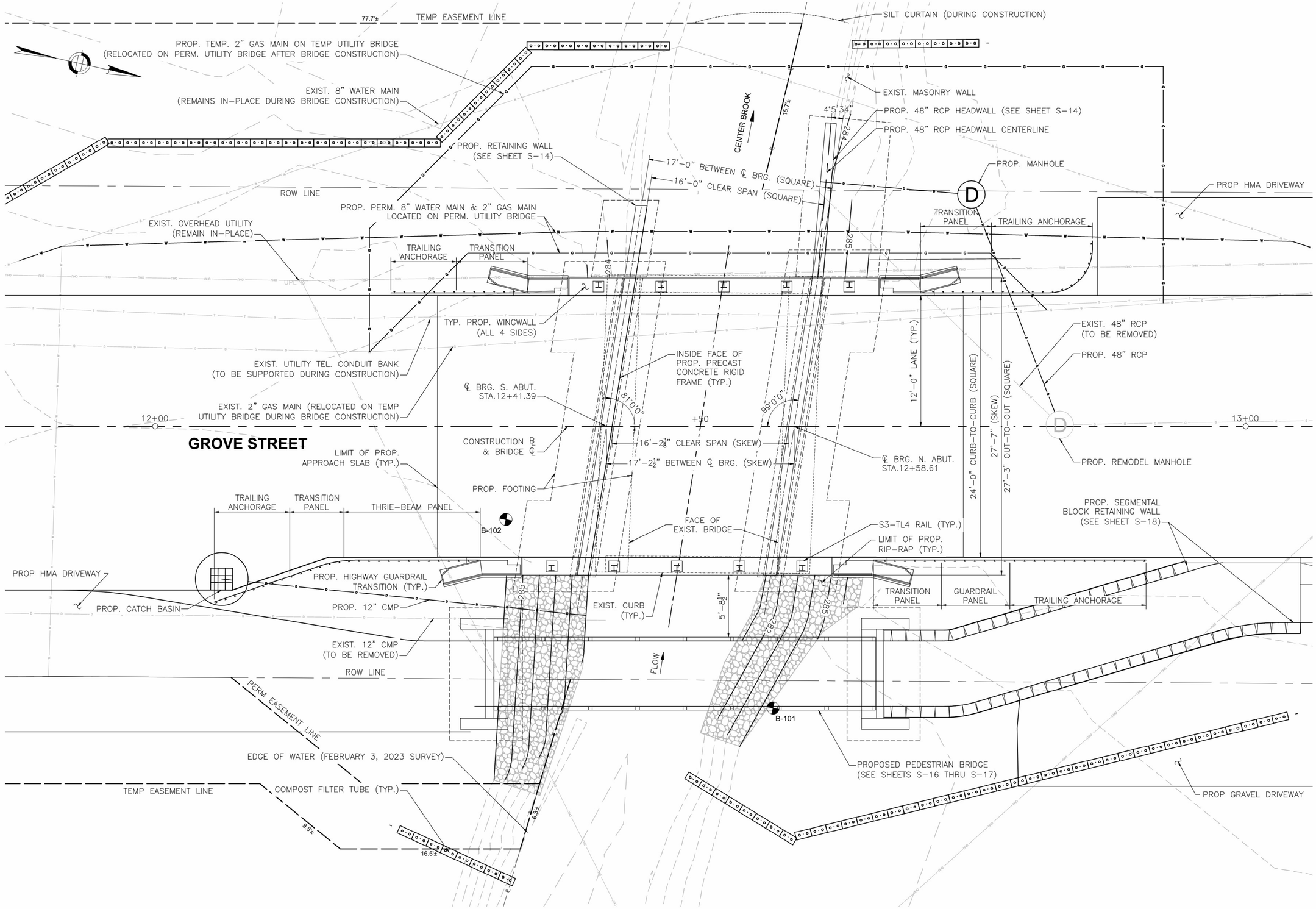


PLAN

SCALE: 1" = 4'

*WATER CONTROL NOT SHOWN FOR CLARITY.
REFER TO SHEETS S-06 AND S-07.

| * |
|---|
| CRH |
| CRJ |

**COMMONWEALTH OF MASSACHUSETTS**
**MassDOT, Highway Division**
CONCEPTUAL DESIGN IS ACCEPTABLE TO
MASSDOT FOR CONTRACTING
Mohammed Nabulsi, P.E.
DISTRICT 3 BRIDGE ENGINEER — DATE

BRIDGE SHEET 04 OF 18. BRIDGE NO. U-01-004 (*)

P:\MA\Upton MA\Grove St. Bridge\CAD\GTH_CAD 11X17\Bridge\Plans\Drawing Data\Plan Sheet Data\Plan Sheet (NW28N-SB9GSE_Fr_MA.dwg

Project:
GROVE STREET BRIDGE
UPTON, MA 01568

Weston & Sampson

Weston & Sampson Engineers, Inc.
100 Foxborough Boulevard, Suite 250
Foxborough, MA 02035
978.532.1900 800.SAMPSON
www.westonandsampson.com

Consultants:

Revisions:

| No. | Date | Description |
|---|---|---|
| | | |
| | | |
| | | |
| | | |
| | | |
| | | |
| | | |
| | | |

COA:

Seal:
COMMONWEALTH OF MASSACHUSETTS
SCOTT R. BRUSO
STRUCTURAL
No. 48061
REGISTERED PROFESSIONAL ENGINEER
2025.03.24 16:28:21 -04'00'

Issued For:
BIDDING

Scale: AS NOTED

| | |
|---|---|
| Date: | MARCH 2025 |
| Drawn By: | SAP |
| Reviewed By: | BM |
| Approved By: | SRB |
| W&S Project No.: | ENG22-1175 |
| W&S File No.: | |

Drawing Title:
PLAN

Sheet Number:
S-04

COPYRIGHT © 2021 WESTON & SAMPSON, INC.

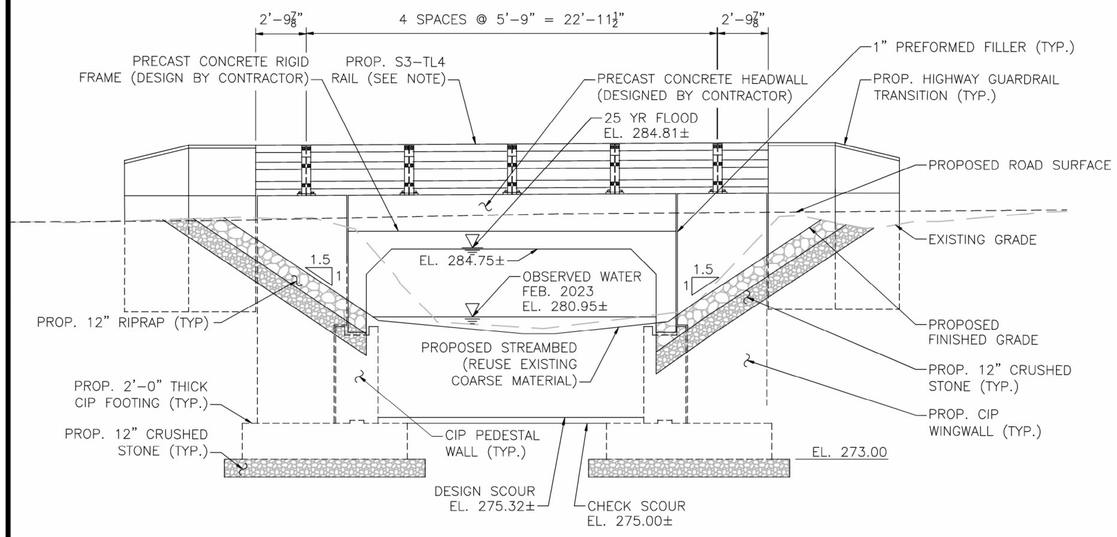


## UPSTREAM ELEVATION VIEW

SCALE: ¼" = 1'-0"

NOTE:
S3-TL4 RAILING ANCHORS BOLT LOCATIONS TO BE COORDINATED WITH PRECAST HEADWALL REINFORCEMENT. ANCHOR BOLTS TO BE CAST-IN WITH PRECAST HEADWALL.

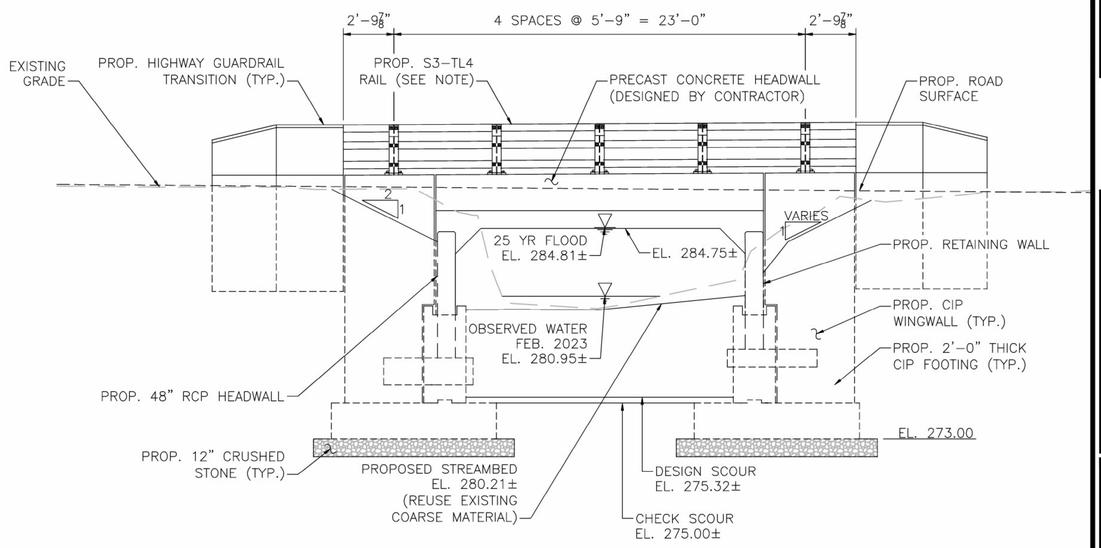


## DOWNSTREAM ELEVATION VIEW

SCALE: ¼" = 1'-0"

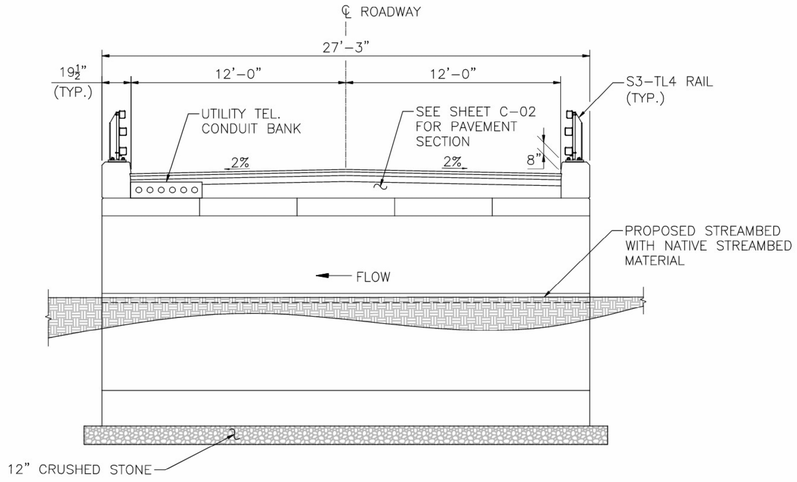


## PROPOSED BRIDGE TRANSVERSE SECTION

SCALE: ¼" = 1'-0"

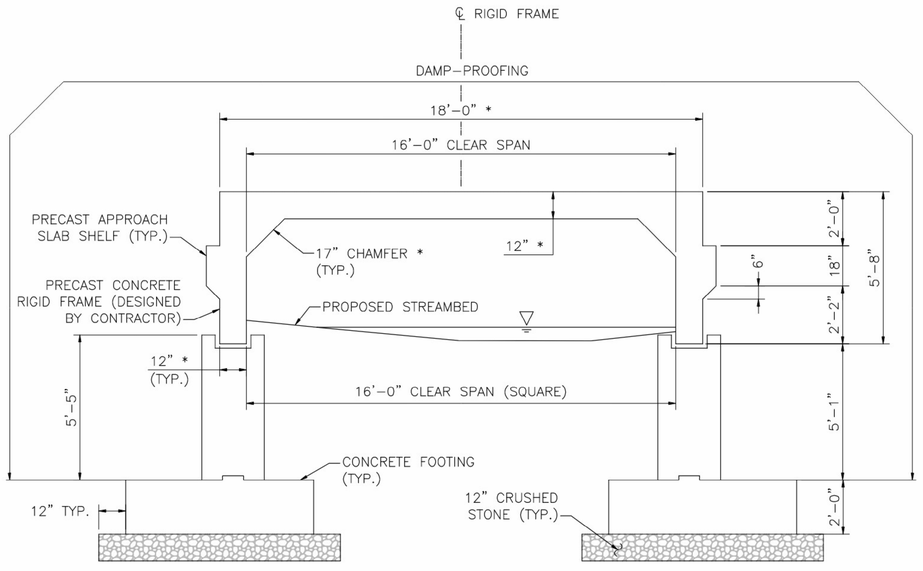


* FINAL DIMENSIONS TO BE DESIGNED BY CONTRACTOR

## TYPICAL FRAME SECTION

SCALE: ⅜" = 1'-0"

| * |
|---|
| CRH |
| CRJ |

**COMMONWEALTH OF MASSACHUSETTS**
**MassDOT, Highway Division**
CONCEPTUAL DESIGN IS ACCEPTABLE TO MASSDOT FOR CONTRACTING
Mohammed Nabulsi, P.E.
Mohammed Nabulsi, P.E. (Apr 25, 2025 10:08 EDT)
DISTRICT 3 BRIDGE ENGINEER — DATE

BRIDGE SHEET 05 OF 18. BRIDGE NO. U-01-004 (*)

Project:
GROVE STREET BRIDGE
UPTON, MA 01568

TOWN OF UPTON INCORPORATED JUNE 14, 1735 MASSACHUSETTS


Weston & Sampson
Weston & Sampson Engineers, Inc.
100 Foxborough Boulevard, Suite 250
Foxborough, MA 02035
978.532.1900 800.SAMPSON
www.westonandsampson.com


Consultants:

Revisions:

| No. | Date | Description |
|---|---|---|
| | | |
| | | |
| | | |
| | | |
| | | |
| | | |
| | | |
| | | |

COA:

Seal:
COMMONWEALTH OF MASSACHUSETTS
SCOTT R. BRUSO
STRUCTURAL
No. 48061
REGISTERED PROFESSIONAL ENGINEER
2025.03.24 16:27:51 -04'00'

Issued For:
BIDDING

Scale: AS NOTED

| | |
|---|---|
| Date: | MARCH 2025 |
| Drawn By: | SFD/SAP |
| Reviewed By: | BM/RPM |
| Approved By: | SRB |
| W&S Project No.: | ENG22-1175 |
| W&S File No.: | |

Drawing Title:
BRIDGE SECTIONS AND ELEVATIONS

Sheet Number:
S-05

COPYRIGHT © 2021 WESTON & SAMPSON, INC.

P:\MA\Upton MA\Grove St. Bridge\CAD\2175 CAD 11X17\Bridge\Plans\Drawing Data\Plan Sheet Data\Plan Sheet (TW)\BRIDGE SECTIONS_ELEV.dwg

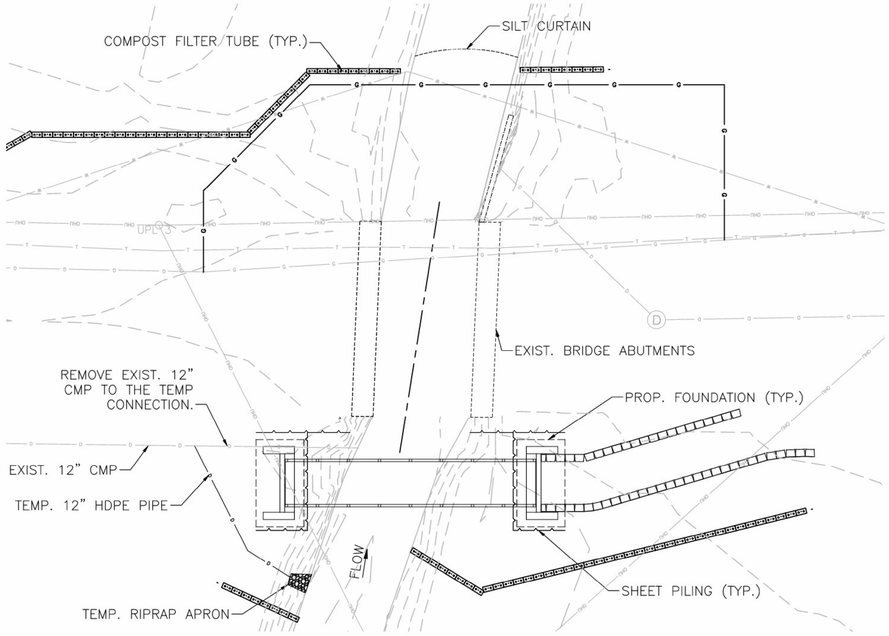


## STAGE 1 WATER CONTROL PLAN

SCALE: 1" = 10'

STAGE 1:

1. INSTALL STORMWATER CONTROL MEASURES.
2. INSTALL TEMP. 12" ø HDPE PIPE AND CONNECT TO EXIST. 12" ø CMP PIPE.
3. REMOVE EXIST. 12" CMP PIPE TO LIMIT SHOWN.
4. INSTALL SHEET PILING TO THE LIMITS SHOWN.
5. EXCAVATE AND CONSTRUCT PEDESTRIAN BRIDGE ABUTMENTS AND WINGWALLS.
6. INSTALL PEDESTRIAN BRIDGE SUPERSTRUCTURE AND SEGMENTAL BLOCK RETAINING WALL.

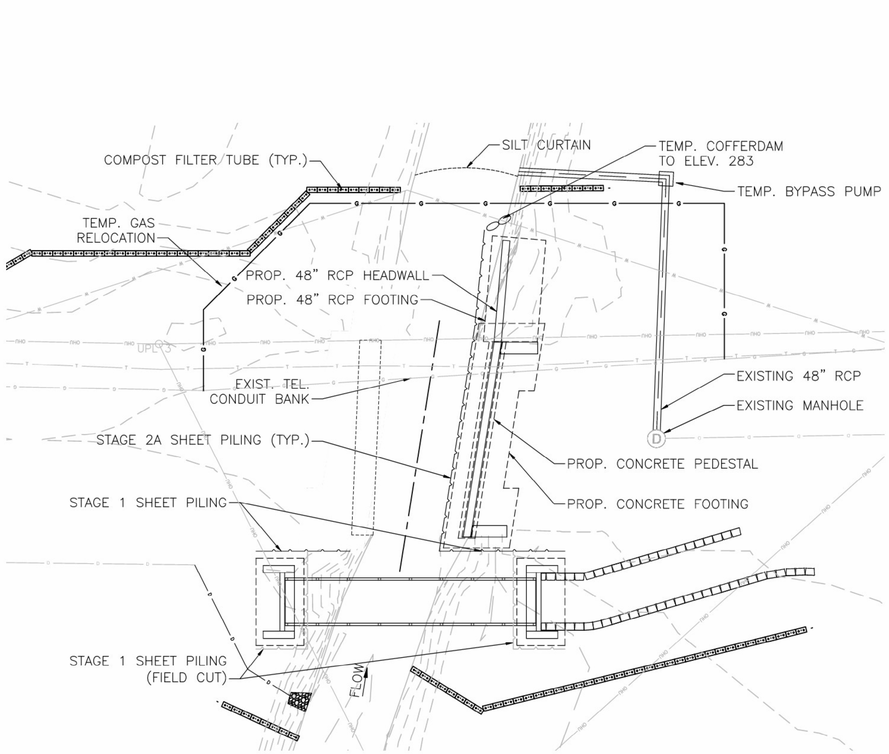


## STAGE 2A WATER CONTROL PLAN

SCALE: 1" = 10'

STAGE 2A:

1. CUT SHEET PILING AT THE PEDESTRIAN ABUTMENTS TO A MINIMUM OF 2'-0" BELOW FINISHED GRADE AT THE LIMITS SHOWN.
2. INSTALL TEMPORARY BRIDGE PROTECTION SHIELD AND REMOVE EXISTING SUPERSTRUCTURE.
3. TEMPORARILY RELOCATE GAS (BY OTHERS) AND SUPPORT EXISTING TELEPHONE CONDUIT BANK IN-PLACE.
4. INSTALL TEMPORARY BYPASS PUMP FROM EXISTING MANHOLE TO THE LIMITS SHOWN.
5. REMOVE EXISTING 48" RCP.
6. INSTALL NORTH ABUTMENT SHEET PILING TO THE LIMITS SHOWN AND INSTALL COFFERDAM TO ELEVATION SHOWN AND DEWATER.
7. DEMOLISH EXISTING NORTH ABUTMENT.
8. EXCAVATE AND CONSTRUCT NORTH ABUTMENT FOOTING, PEDESTAL WALL, AND WINGWALLS, AND 48" RCP FOOTING AND HEADWALL.
9. BACKFILL TO ELEV. 279.5.

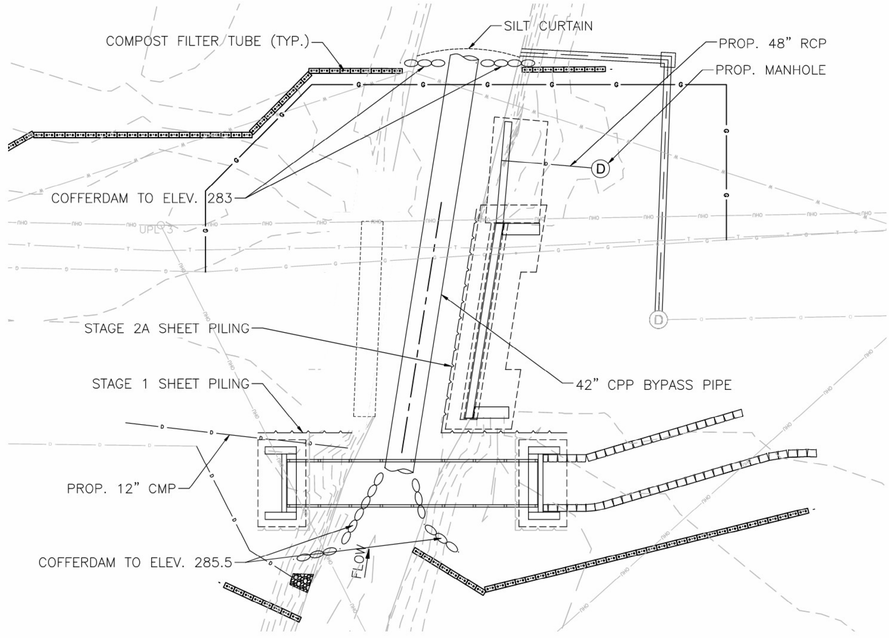


## STAGE 2B WATER CONTROL PLAN

SCALE: 1" = 10'

STAGE 2B:

1. REMOVE STAGE 2A SHEET PILING TO THE LIMITS SHOWN.
2. INSTALL 42" HDPE BYPASS PIPE AND COFFERDAMS TO REDIRECT FLOW.
3. DEWATER WITHIN THE EXTENTS SHOWN.
4. REGRADE STREAMBED.
5. INSTALL PROP. 12" CMP.
6. INSTALL PROP. 48" RCP AND PROP. MANHOLE.

| * |
|---|
| CRH |
| CRJ |

**COMMONWEALTH OF MASSACHUSETTS**
**MassDOT, Highway Division**
CONCEPTUAL DESIGN IS ACCEPTABLE TO MASSDOT FOR CONTRACTING
Mohammed Nabulsi, P.E.
DISTRICT 3 BRIDGE ENGINEER — DATE

BRIDGE SHEET 06 OF 18. BRIDGE NO. U-01-004 (*)

Project:
GROVE STREET BRIDGE
UPTON, MA 01568

TOWN OF UPTON INCORPORATED JUNE 14, 1735 MASSACHUSETTS

Weston & Sampson
Weston & Sampson Engineers, Inc.
100 Foxborough Boulevard, Suite 250
Foxborough, MA 02035
978.532.1900 800.SAMPSON
www.westonandsampson.com

Consultants:

Revisions:

| No. | Date | Description |
|---|---|---|
| | | |
| | | |
| | | |
| | | |
| | | |
| | | |
| | | |
| | | |

COA:

Seal:
COMMONWEALTH OF MASSACHUSETTS
SCOTT R. BRUSO
STRUCTURAL
No. 48661
REGISTERED PROFESSIONAL ENGINEER
2025.03.24 16:27:13-04'00'

Issued For:
BIDDING

Scale: AS NOTED

Date: MARCH 2025
Drawn By: SAP
Reviewed By: BM/RPM
Approved By: SRB

W&S Project No.: ENG22-1175
W&S File No.:

Drawing Title:
WATER CONTROL STAGES 1 - 2

Sheet Number:
S-06

P:\MA\Upton MA\Grove St. Bridge\ACAD\25-CAD 11X17\Bridge\Phase\Drawing Data\Plan Sheet Data\Plan Sheet (TMT)\S06_WATER CONTROL.dwg

COPYRIGHT © 2021 WESTON & SAMPSON, INC.

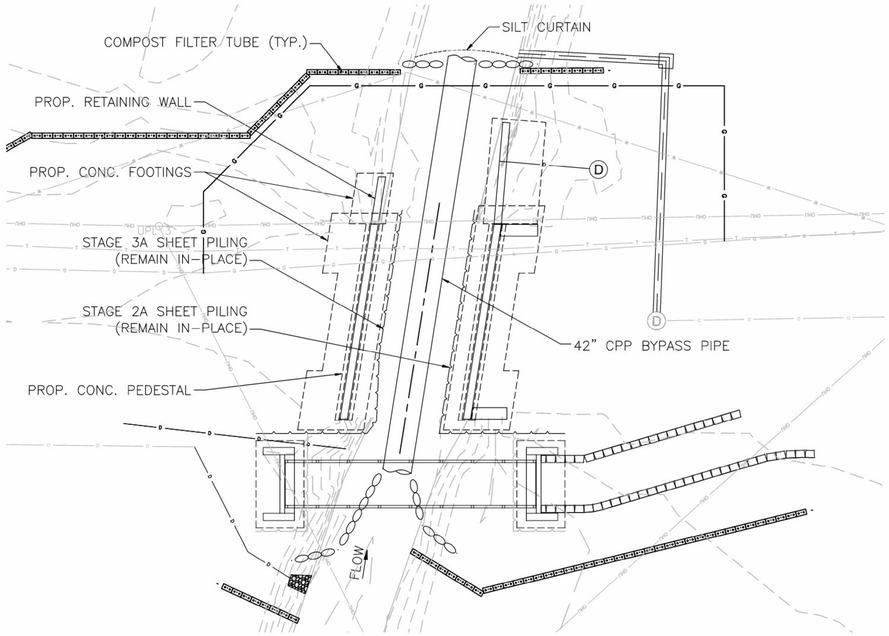


## STAGE 3A WATER CONTROL PLAN

SCALE: 1" = 10'

STAGE 3A:

1. INSTALL SOUTH ABUTMENT SHEET PILING TO THE EXTENTS SHOWN.
2. EXCAVATE AND CONSTRUCT SOUTH ABUTMENT FOOTING, PEDESTAL WALL, AND RETAINING WALL FOOTING AND WALL.
3. BACKFILL TO ELEV. 279.5.

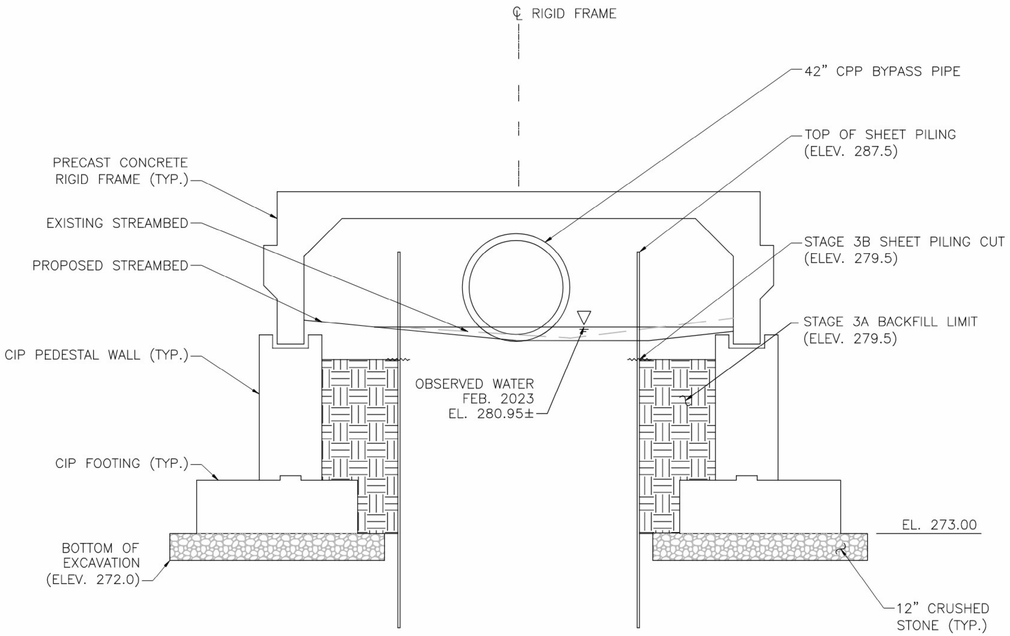


## TYPICAL WATER CONTROL SECTION

SCALE: 3/8" = 1'-0"

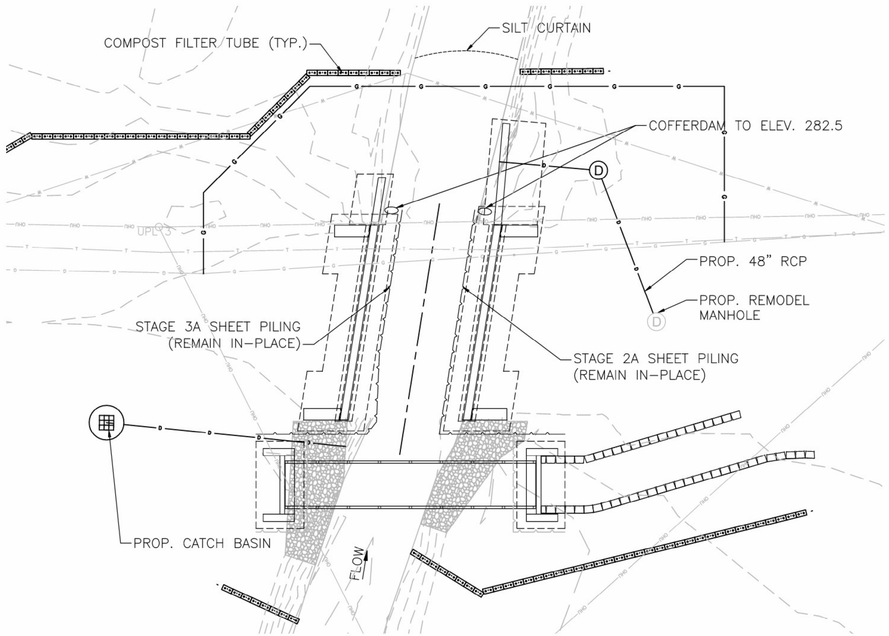


## STAGE 3B WATER CONTROL PLAN

SCALE: 1" = 10'

STAGE 3B:

1. INSTALL COFFERDAMS TO THE ELEVATIONS SHOWN.
2. REMOVE TEMPORARY 42" CPP BYPASS PIPE AND COFFERDAMS.
3. INSTALL PRECAST RIGID FRAME UNITS AND GROUT SHEAR KEYS.
4. INSTALL SOUTH WINGWALLS,
5. REMOVE TEMPORARY BYPASS PUMP FROM EXISTING MANHOLE AND REDIRECT DRAINAGE THROUGH NEW 48" HEADWALL.
6. REGRADE STREAMBED WITHIN THE LIMITS OF SHEET PILING.
7. CUT SHEET PILING AT VEHICLE BRIDGE ABUTMENTS TO ELEV. 279.5 AND REGRADE, AS NECESSARY.
8. REMOVE TEMPORARY 12" HDPE PIPE AND REDIRECT DRAINAGE THROUGH NEW 12" CMP.
9. INSTALL RIPRAP.

| * |
|---|
| CRH |
| CRJ |

**COMMONWEALTH OF MASSACHUSETTS**
**MassDOT, Highway Division**
CONCEPTUAL DESIGN IS ACCEPTABLE TO MASSDOT FOR CONTRACTING
Mohammed Nabulsi, P.E.
Mohammed Nabulsi, P.E., Mar 20, 2025 09:58 EDT
DISTRICT 3 BRIDGE ENGINEER — DATE

BRIDGE SHEET 07 OF 18. BRIDGE NO. U-01-004 (*)

Project:
GROVE STREET BRIDGE
UPTON, MA 01568

Weston & Sampson
Weston & Sampson Engineers, Inc.
100 Foxborough Boulevard, Suite 250
Foxborough, MA 02035
978.532.1900 800.SAMPSON
www.westonandsampson.com

Consultants:

Revisions:

| No. | Date | Description |
|---|---|---|
| | | |
| | | |
| | | |
| | | |
| | | |
| | | |
| | | |
| | | |

COA:

Seal:
COMMONWEALTH OF MASSACHUSETTS
SCOTT R. BRUSO
STRUCTURAL
No. 48061
REGISTERED PROFESSIONAL ENGINEER
2025.03.24 15:26:49 -04'00'

Issued For:
BIDDING

Scale: AS NOTED

Date: MARCH 2025
Drawn By: SAP
Reviewed By: BM/RPM
Approved By: SRB
W&S Project No.: ENG22-1175
W&S File No.:

Drawing Title:
WATER CONTROL STAGE 3 AND TYPICAL SECTION

Sheet Number:
S-07

P:\Municipal\Upton MA\Grove St Bridge\PLAN\2211X.CAD.10\Stage3\Sheet\Drawing Data\Plan Sheet Files\Plan Sheet (WATER CONTROL).dwg

COPYRIGHT © 2021 WESTON & SAMPSON, INC.

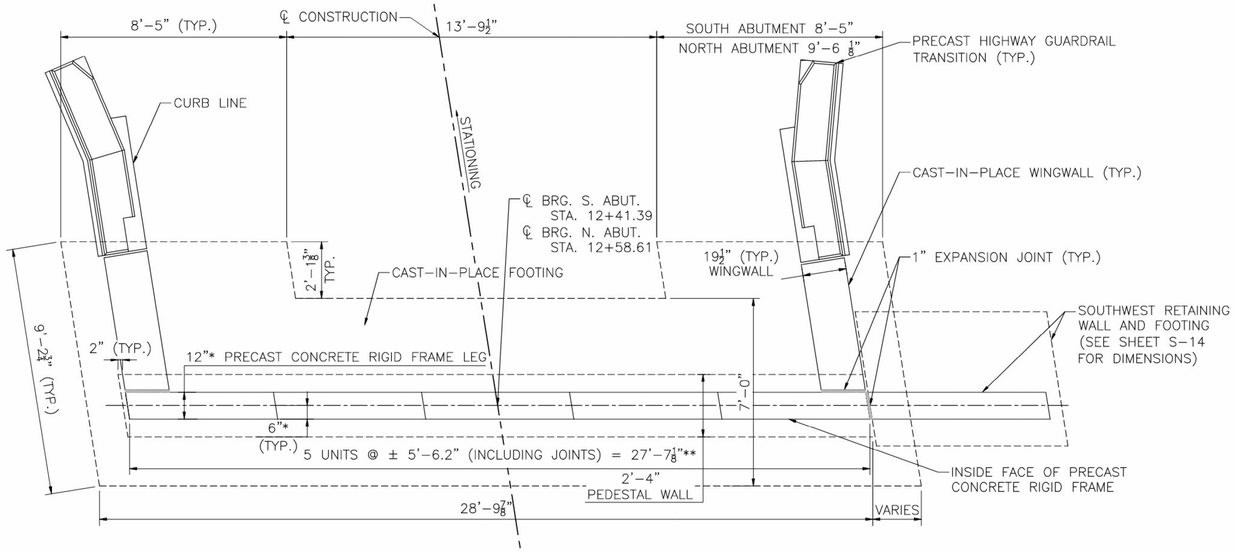


## SOUTH ABUTMENT PLAN

SCALE: ⅜" = 1'-0"

SOUTH ABUTMENT PLAN SHOWN, NORTH ABUTMENT PLAN SIMILAR

* PRECAST CONCRETE RIGID FRAME LEG THICKNESS TO BE DETERMINED BY FABRICATOR

** PRECAST CONCRETE RIGID FRAME UNIT WIDTH TO BE DETERMINED BY FABRICATOR (4'-0" MINIMUM WIDTH)

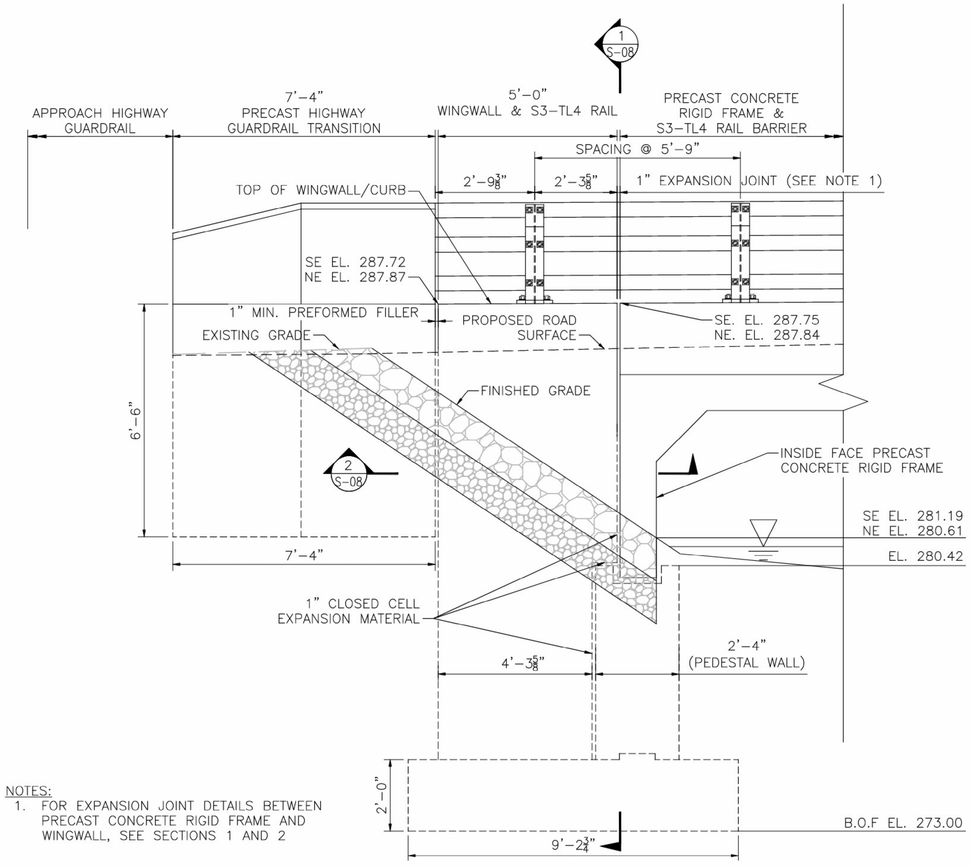


NOTES:
1. FOR EXPANSION JOINT DETAILS BETWEEN PRECAST CONCRETE RIGID FRAME AND WINGWALL, SEE SECTIONS 1 AND 2

## SOUTHEAST WINGWALL ELEVATION

SCALE: ½" = 1'-0"

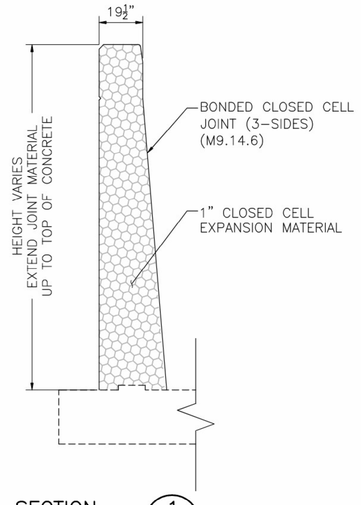


## SECTION 1

SCALE: ⅜" = 1'-0" — S-08

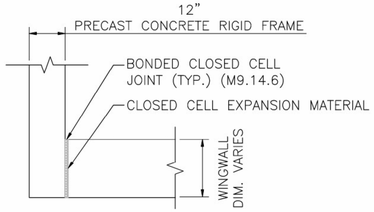


## SECTION 2

SCALE: ½" = 1'-0" — S-08

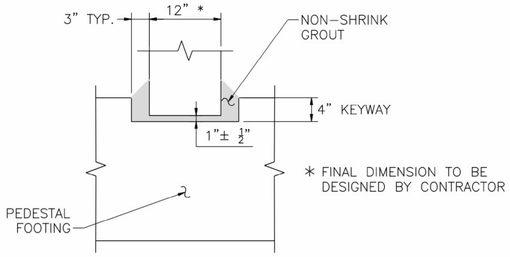


## TYPICAL RIGID FRAME KEYWAY

SCALE: 1" = 1'-0"

| * |
|---|
| CRH |
| CRJ |

**COMMONWEALTH OF MASSACHUSETTS**
**MassDOT, Highway Division**
CONCEPTUAL DESIGN IS ACCEPTABLE TO MASSDOT FOR CONTRACTING
Mohammed Nabulsi, P.E.
DISTRICT 3 BRIDGE ENGINEER — DATE

BRIDGE SHEET 08 OF 18. BRIDGE NO. U-01-004 (*)

Project:
GROVE STREET BRIDGE
UPTON, MA 01568


Weston & Sampson
Weston & Sampson Engineers, Inc.
100 Foxborough Boulevard, Suite 250
Foxborough, MA 02035
978.532.1900 800.SAMPSON
www.westonandsampson.com


Consultants:

Revisions:

| No. | Date | Description |
|---|---|---|
| | | |
| | | |
| | | |
| | | |
| | | |
| | | |
| | | |
| | | |

COA:

Seal:
SCOTT R. BRUSO STRUCTURAL No. 48061 REGISTERED PROFESSIONAL ENGINEER
COMMONWEALTH OF MASSACHUSETTS
2025.03.24 16:36:25-04'00'

Issued For:
BIDDING

Scale: AS NOTED

| | |
|---|---|
| Date: | MARCH 2025 |
| Drawn By: | ERL/BMG |
| Reviewed By: | SAP/RPM |
| Approved By: | SRB |
| W&S Project No.: | ENG22-1175 |
| W&S File No.: | |

Drawing Title:
ABUTMENT PLAN

Sheet Number:
S-08


COPYRIGHT © 2021 WESTON & SAMPSON, INC.


P:\MA\Upton MA\Grove St Bridge\CAD\2315 CAD 1900sge\Sheet Drawing Data\Plot Sheet Files\Plot Sheet DW\0808-BASE\TEMPLATE\ALL.dwg

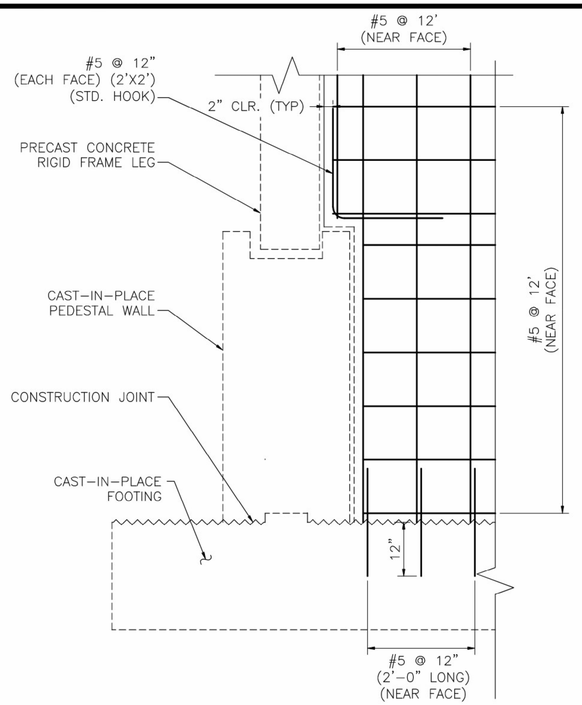


## WINGWALL REINFORCEMENT (AT PEDESTAL WALL)

SCALE: $\frac{3}{4}$" = 1'-0"

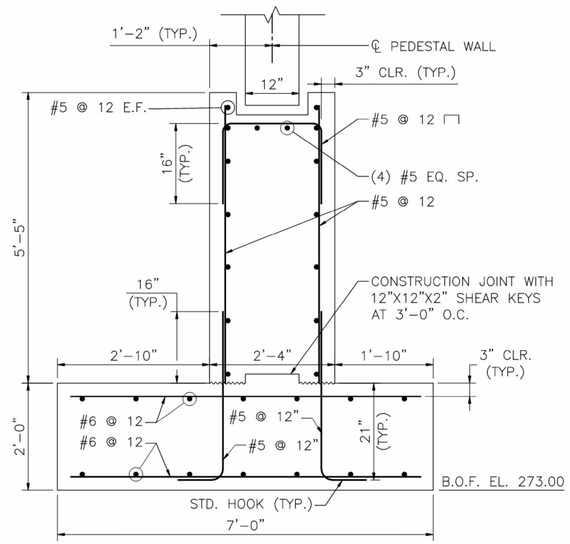


## TYPICAL FOOTING AND PEDESTAL WALL SECTION

SCALE: $\frac{3}{4}$" = 1'-0"

RIGID FRAME BEARING PRESSURE NOTES:

1. FOOTING DESIGN BASED ON A FACTORED BEARING PRESSURE OF 3.90 KSF PER AASHTO LRFD BRIDGE DESIGN SPECIFICATIONS STRENGTH I LOAD COMBINATION. THE ACTUAL FACTORED BEARING PRESSURE SHALL BE DETERMINED BY THE CONTRACTOR AND MEET THE REQUIREMENTS AS SPECIFIED IN THE GEOTECHNICAL REPORT.
2. THE FACTORED BEARING RESISTANCE = 5.15 KSF. FACTORED BEARING RESISTANCE IS THE PRODUCT OF THE NOMINAL BEARING RESISTANCE AND A RESISTANCE FACTOR OF 0.45.

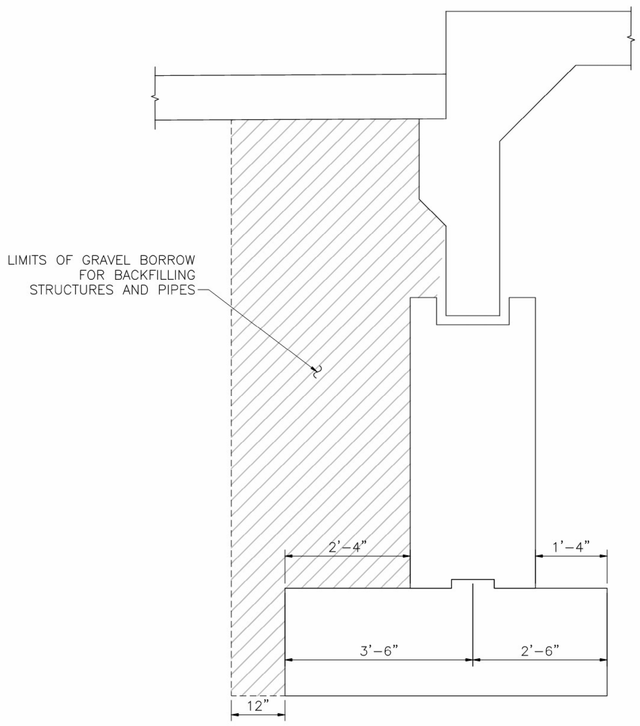


## LIMITS OF GRAVEL BACKFILL FOR RIGID FRAME

SCALE: $\frac{3}{4}$" = 1'-0"

WINGWALL BEARING PRESSURE NOTES:

1. FOOTING DESIGN BASED ON A FACTORED BEARING PRESSURE OF 3.09 KSF PER AASHTO LRFD BRIDGE DESIGN SPECIFICATIONS STRENGTH I LOAD COMBINATION.
2. THE FACTORED BEARING RESISTANCE = 5.50 KSF. FACTORED BEARING RESISTANCE IS THE PRODUCT OF THE NOMINAL BEARING RESISTANCE AND A RESISTANCE FACTOR OF 0.45.

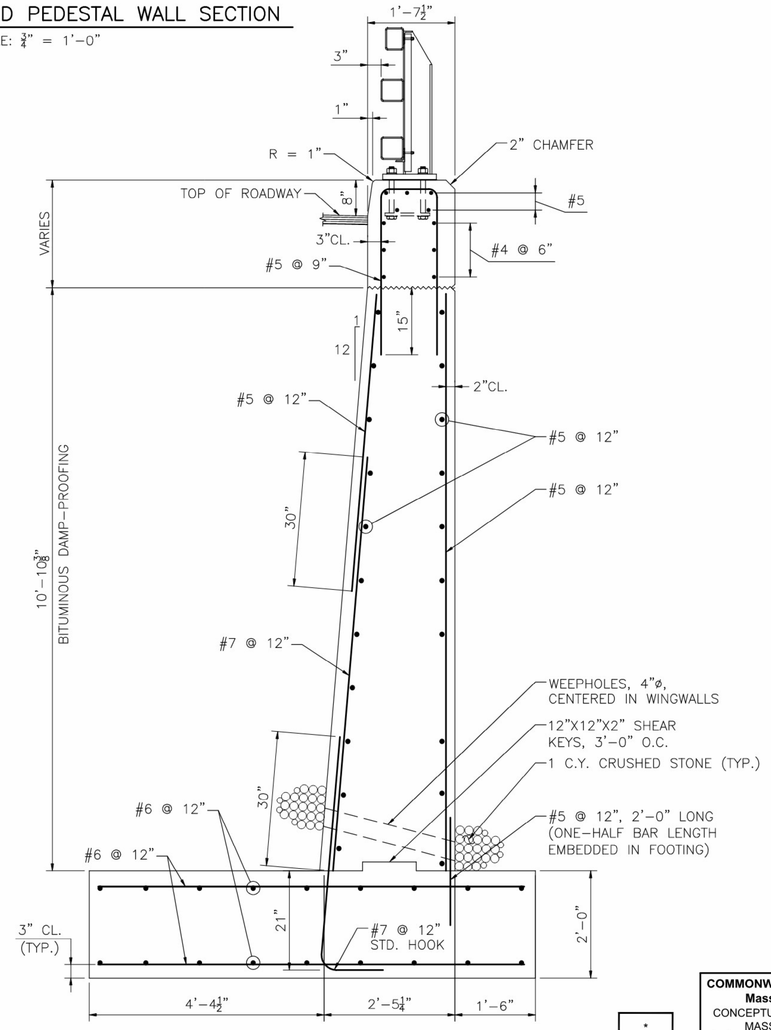


## TYPICAL WINGWALL SECTION

SCALE: $\frac{3}{4}$" = 1'-0"

| * |
|---|
| CRH |
| CRJ |

**COMMONWEALTH OF MASSACHUSETTS**
**MassDOT, Highway Division**
CONCEPTUAL DESIGN IS ACCEPTABLE TO MASSDOT FOR CONTRACTING
Mohammed Nabulsi, P.E.
Mohammed M. Nabulsi, P.E. (Apr 30, 2025 10:52 EDT)
DISTRICT 3 BRIDGE ENGINEER — DATE

BRIDGE SHEET 09 OF 18. BRIDGE NO. U-01-004 (*)

Project:
GROVE STREET BRIDGE
UPTON, MA 01568

TOWN OF UPTON INCORPORATED JUNE 14, 1735 MASSACHUSETTS

Weston & Sampson

Weston & Sampson Engineers, Inc.
100 Foxborough Boulevard, Suite 250
Foxborough, MA 02035
978.532.1900 800.SAMPSON
www.westonandsampson.com

Consultants:

Revisions:

| No. | Date | Description |
|---|---|---|
| | | |
| | | |
| | | |
| | | |
| | | |
| | | |
| | | |
| | | |

COA:

Seal:

COMMONWEALTH OF MASSACHUSETTS
SCOTT R. BRUSO
STRUCTURAL
No. 48061
REGISTERED PROFESSIONAL ENGINEER

2025.03.24 16:26:01 -04'00'

Issued For:

BIDDING

| | |
|---|---|
| Scale: | AS NOTED |
| Date: | MARCH 2025 |
| Drawn By: | ERL/BMG |
| Reviewed By: | SAP/RPM |
| Approved By: | SRB |
| W&S Project No.: | ENG22-1175 |
| W&S File No.: | |

Drawing Title:

ABUTMENT DETAILS

Sheet Number:

S-09

COPYRIGHT © 2021 WESTON & SAMPSON, INC.

P:\MA\Upton MA\Grove St. Bridge\CAD\2315.CAD 100\sig\Sheet Drawing Date\Plot Sheet Plot\Plot Sheet Plot DWG\BRIDGE\ABUTMENTS\ST-E14.1.dwg

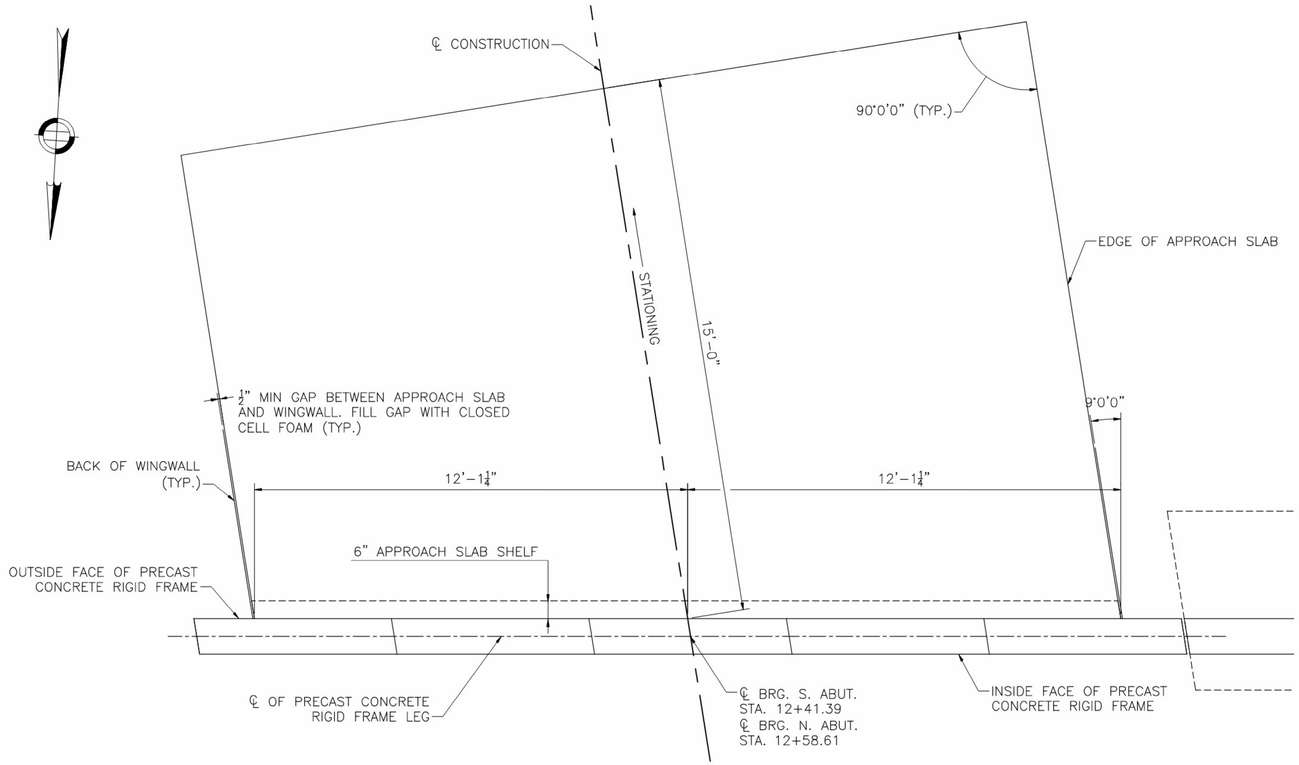


## APPROACH SLAB PLAN

SCALE: ½" = 1'-0"

SOUTH APPROACH SLAB SHOWN, NORTH APPROACH SLAB SIMILAR

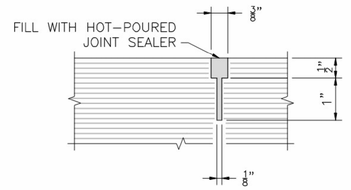


## PAVEMENT SAWCUT DETAIL

SCALE: 1" = 1'-0"

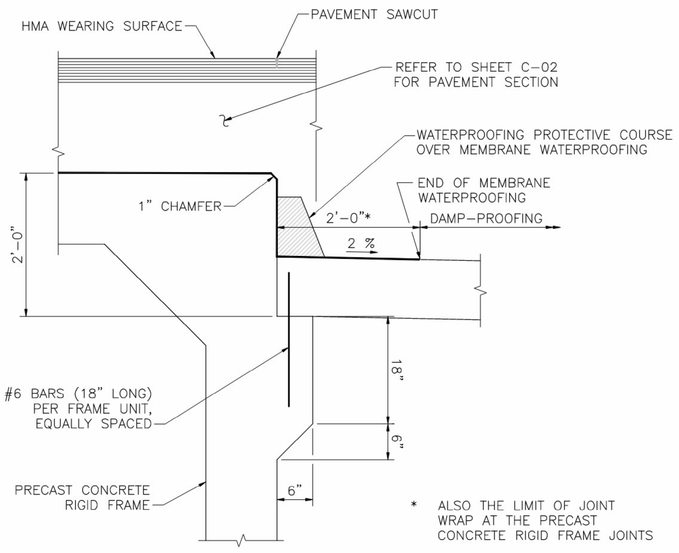


## PRECAST APPROACH SLAB SHELF DETAIL

SCALE: 1" = 1'-0"

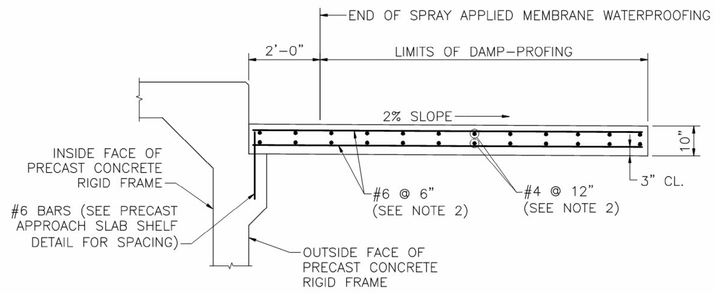


NOTES:

1. APPROACH SLAB TO BE 4000 PSI, 1½ IN, 565 CEMENT CONCRETE.
2. PLACE LONGITUDINAL REINFORCEMENT PARALLEL TO BASELINE. PLACE TRANSVERSE REINFORCEMENT PARALLEL TO PRECAST CONCRETE RIGID FRAME LEG.

## TYPICAL APPROACH SLAB SECTION

SCALE: ¾" = 1'-0"

| * |
|---|
| CRH |
| CRJ |

**COMMONWEALTH OF MASSACHUSETTS**
**MassDOT, Highway Division**
CONCEPTUAL DESIGN IS ACCEPTABLE TO MASSDOT FOR CONTRACTING
Mohammed Nabulsi, P.E.
Mohammed Nabulsi, P.E. Date: 04.2025 10:53:10 EDT
DISTRICT 3 BRIDGE ENGINEER — DATE

BRIDGE SHEET 10 OF 18. BRIDGE NO. U-01-004 (*)

Project:
GROVE STREET BRIDGE
UPTON, MA 01568

Weston & Sampson
Weston & Sampson Engineers, Inc.
100 Foxborough Boulevard, Suite 250
Foxborough, MA 02035
978.532.1900 800.SAMPSON
www.westonandsampson.com

Consultants:

Revisions:

| No. | Date | Description |
|---|---|---|
| | | |
| | | |
| | | |
| | | |
| | | |
| | | |
| | | |
| | | |

COA:

Seal:
COMMONWEALTH OF MASSACHUSETTS
SCOTT R. BRUSO
STRUCTURAL
No. 48061
REGISTERED PROFESSIONAL ENGINEER
2025.03.24 16:25:40-04'00'

Issued For:
BIDDING

Scale: AS NOTED

| | |
|---|---|
| Date: | MARCH 2025 |
| Drawn By: | ERL/BMG |
| Reviewed By: | SAP/RPM |
| Approved By: | SRB |
| W&S Project No.: | ENG22-1175 |
| W&S File No.: | |

Drawing Title:
APPROACH DETAILS

Sheet Number:
S-10

COPYRIGHT © 2021 WESTON & SAMPSON, INC.

P:\MA\Upton MA\Grove St Bridge\CAD\2315 CAD 100\dgn\Power\Driveway Detail\Pay Sheet Files\Pay Sheet DW\S00810APPROACH SLAB DETAILS.dwg

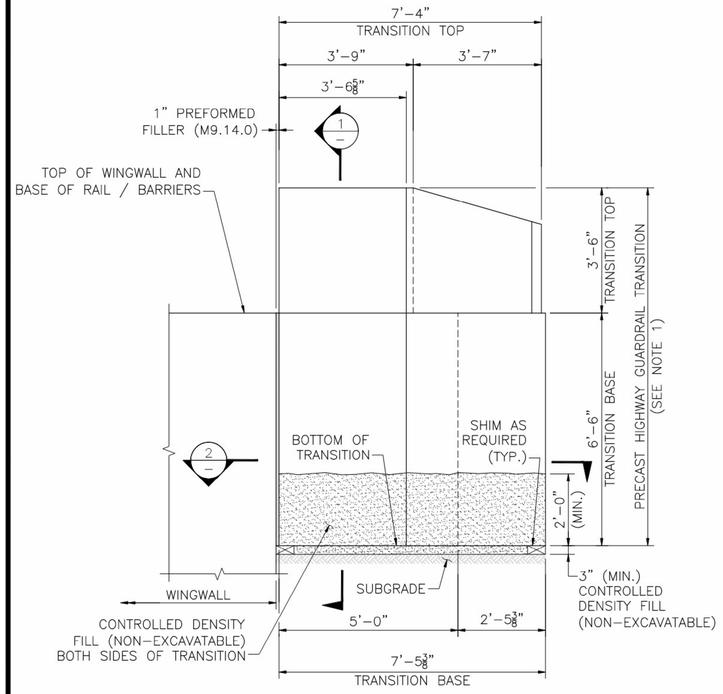


PRECAST HIGHWAY GUARDRAIL TRANSITION BASE ELEVATION

SCALE: ½" = 1'-0"

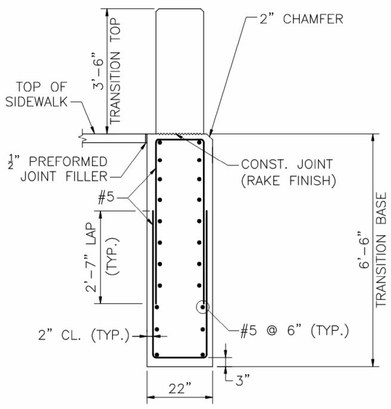


NOTE:

REINFORCEMENT OF THE TRANSITION TOP IS NOT SHOWN FOR CLARITY.

SECTION 1

SCALE: ½" = 1'-0"

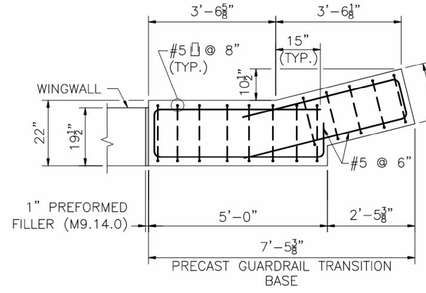


NOTE:

WINGWALL REINFORCEMENT AND STRIATIONS NOT SHOWN FOR CLARITY.

SECTION 2

SCALE: ½" = 1'-0"

NOTES:

1. PRECAST GUARDRAIL TRANSITION SHALL BE 5000 PSI, ¾ IN, 685 HP CEMENT CONCRETE.
2. GRAVEL BORROW SHALL BE PLACED AND THOROUGHLY COMPACTED TO THE GRADE OF 3" (MIN.) BELOW THE INTENDED BOTTOM OF THE PRECAST GUARDRAIL TRANSITION BASE AND TO A HEIGHT OF 2'-0" (MIN.) ON ALL SIDES OF THE TRANSITION BASE TO FORM A TRENCH IN WHICH TO SET THE TRANSITION. WHERE NO GRAVEL BORROW IS REQUIRED BELOW THE BASE, IT SHALL BE PLACED ON UNDISTURBED SOIL.
3. CONTRACTOR SHALL SET THE PRECAST GUARDRAIL TRANSITION TO THE REQUIRED ELEVATION AND ALIGNMENT, AND BACKILL PRECAST GUARDRAIL TRANSITION WITH CONTROLLED DENSITY FILL (NON-EXCAVATABLE) TO THE ELEVATION SHOWN.
4. AFTER CONTROLLED DENSITY FILL (NON-EXCAVATABLE) HAS SET FILL THE GAPS BETWEEN GUARDRAIL TRANSITION AND BLOCK-OUT IN BACKWALL AND ABUTMENT WITH NON-SHRINK GROUT UP TO THE TOP OF BACKWALL.
5. THE REST OF REINFORCEMENT IS NOT SHOWN FOR CLARITY.

# BOTTOM OF PRECAST HIGHWAY GUARDRAIL TRANSITION FOR S3-TL4 RAILING

| * |
|---|
| CRH |
| CRJ |

**COMMONWEALTH OF MASSACHUSETTS**
**MassDOT, Highway Division**
CONCEPTUAL DESIGN IS ACCEPTABLE TO MASSDOT FOR CONTRACTING
Mohammed Nabulsi, P.E.
DISTRICT 3 BRIDGE ENGINEER — DATE



COPYRIGHT © 2021 WESTON & SAMPSON, INC.

P:\MA\Upton MA\Grove St Bridge\ACAD\215 CAD 1500ogeProject Drawings\DetailPlan Sheet Files\Plan Sheet DWG\S811-13(TRANSITION & RAILING).dwg

Project:
GROVE STREET BRIDGE
UPTON, MA 01568

Weston & Sampson

Weston & Sampson Engineers, Inc.
100 Foxborough Boulevard, Suite 250
Foxborough, MA 02035
978.532.1900 800.SAMPSON
www.westonandsampson.com

Consultants:

Revisions:

| No. | Date | Description |
|---|---|---|
| | | |
| | | |
| | | |
| | | |
| | | |
| | | |
| | | |
| | | |

COA:

Seal:
COMMONWEALTH OF MASSACHUSETTS
SCOTT R. BRUSO
STRUCTURAL
No. 48061
REGISTERED PROFESSIONAL ENGINEER
2025.03.24 16:25:16-04'00'

Issued For:
BIDDING

Scale: AS NOTED

Date: MARCH 2025
Drawn By: BMG
Reviewed By: BM
Approved By: SRB
W&S Project No.: ENG22-1175
W&S File No.:

Drawing Title:
PRECAST GUARDRAIL TRANSITION BASE

Sheet Number:
S-11

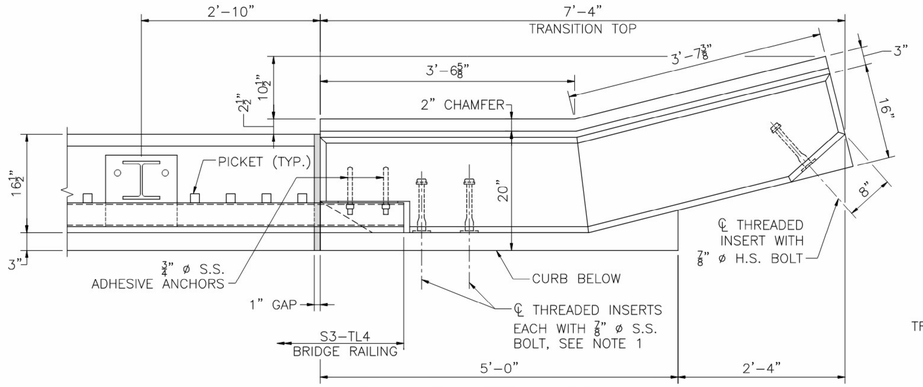


PLAN AT SAFETY CURB
SCALE: 1" = 1'–0"

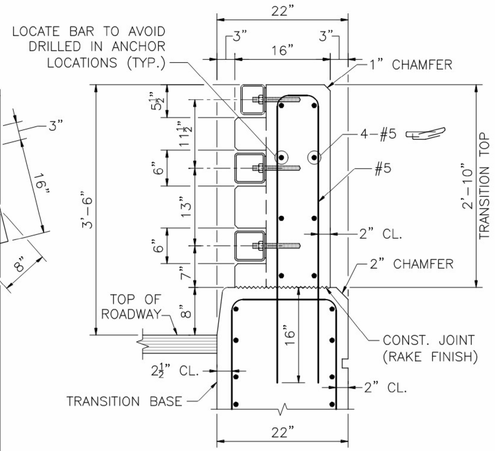


SECTION 2 AT SAFETY CURB
SCALE: 1" = 1'–0"

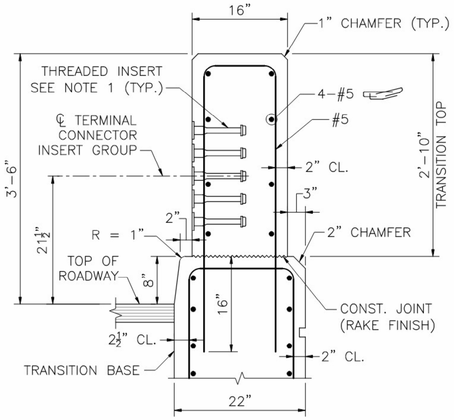


SECTION 3 AT SAFETY CURB
SCALE: 1" = 1'–0"

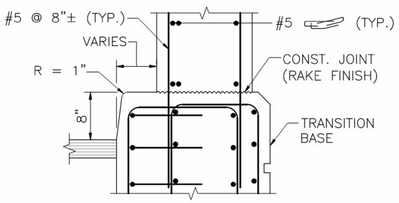


SECTION 4 AT SAFETY CURB
SCALE: 1" = 1'–0"

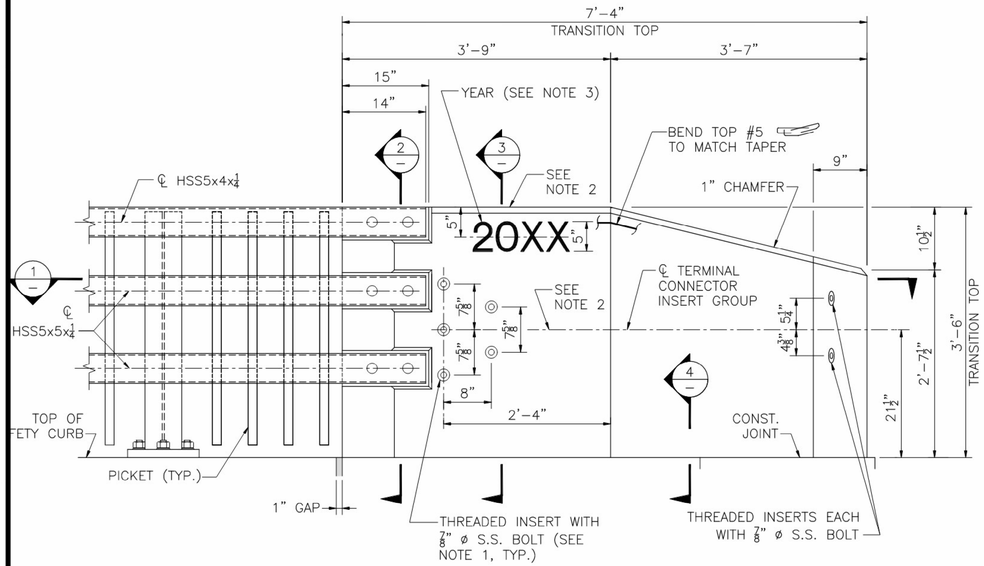


ELEVATION AT SAFETY CURB
SCALE: 1" = 1'–0"

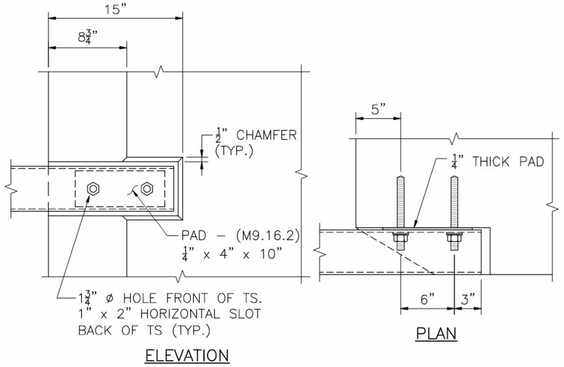


ELEVATION

PLAN

RAIL ATTACHMENT
SCALE: 1½" = 1'–0"

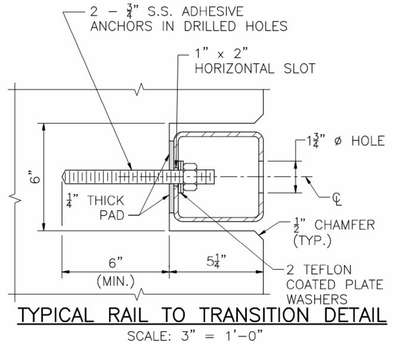


TYPICAL RAIL TO TRANSITION DETAIL
SCALE: 3" = 1'–0"

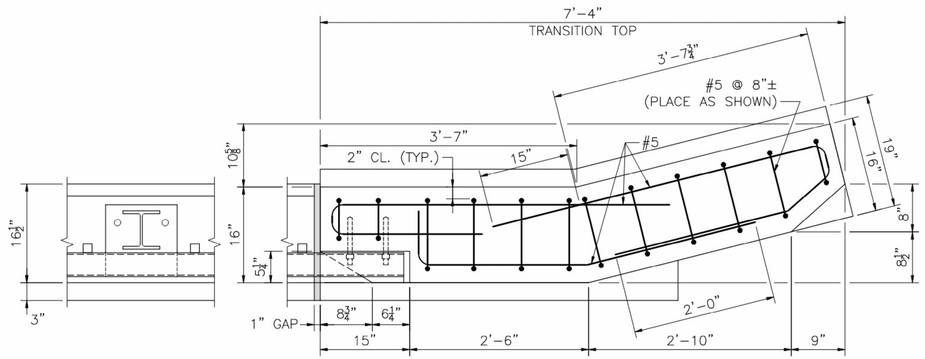


SECTION 1
SCALE: 1" = 1'–0"

## NOTES:

1. THREADED INSERTS SHALL BE PREQUALIFIED BY THE MANUFACTURER AS BEING CAPABLE OF DEVELOPING A NOMINAL SHEAR RESISTANCE OF 20 KIPS PER ⅞" ø S.S. BOLT. S.S. BOLTS SHALL BE ⅞" ø x 1½" LONG FULLY THREADED AISI TYPE 304N STAINLESS STEEL. INSERTS FOR ⅞" S.S. BOLTS SHALL BE GALVANIZED AND CAST INTO THE TRANSITION.
2. THE TRANSITION MAY BE CAST SQUARE AND SET PLUMB WITH THE MINIMUM EMBEDMENT DEPTH SHOWN. THE TERMINAL CONNECTOR INSERT GROUP SHALL BE SQUARE TO THE POST.
3. USE LATEST CONTRACT COMPLETION YEAR IN EFFECT WHEN THE FIRST GUARDRAIL TRANSITION IS CAST. USE THIS YEAR FOR ALL GUARDRAIL TRANSITIONS.
4. ALL CONCRETE FOR THE PRECAST HIGHWAY GUARDRAIL TRANSITION SHALL BE 5000 PSI, ¾", 685 HP CEMENT CONCRETE.
5. LIFTING DEVICES (NOT SHOWN), INCLUDING THEIR NUMBER AND LOCATION, SHALL BE DESIGNED AND DETAILED BY THE PRECASTER. THEY SHALL BE GALVANIZED AND SHALL BE PLACED AND RECESSED IN POCKETS TO PROVIDE 1½" CLEAR COVER TO THE FACE OF THE TRANSITION CONCRETE. THESE DEVICES SHALL BE CLEARLY SHOWN ON THE SHOP DRAWINGS ALONG WITH ALL SUPPORTING CALCULATIONS AND/OR CATALOG CUTS. ONCE THE PRECAST TRANSITION IS SET IN PLACE, THE LIFTING DEVICE POCKETS SHALL BE FILLED WITH A NON–SHRINK GROUT THAT MATCHES THE COLOR OF THE TRANSITION CONCRETE WHEN CURED AND THE FILLED POCKETS SHALL BE RUBBED WITH A CORUNDUM STONE TO BLEND OUT THE JOINTS.

| * |
|---|
| CRH |
| CRJ |

**COMMONWEALTH OF MASSACHUSETTS**
**MassDOT, Highway Division**
CONCEPTUAL DESIGN IS ACCEPTABLE TO MASSDOT FOR CONTRACTING
Mohammed Nabulsi, P.E.
Mohammed Nabulsi, P.E. Date: 2025.10.24 10:58 EDT
DISTRICT 3 BRIDGE ENGINEER — DATE

# TOP OF PRECAST HIGHWAY GUARDRAIL TRANSITION FOR S3–TL4 RAILING



COPYRIGHT © 2021 WESTON & SAMPSON, INC.

Project:
GROVE STREET BRIDGE
UPTON, MA 01568

Weston & Sampson
Weston & Sampson Engineers, Inc.
100 Foxborough Boulevard, Suite 250
Foxborough, MA 02035
978.532.1900 800.SAMPSON
www.westonandsampson.com

Consultants:

Revisions:

| No. | Date | Description |
|---|---|---|
| | | |
| | | |
| | | |
| | | |
| | | |
| | | |
| | | |
| | | |

COA:

Seal:
COMMONWEALTH OF MASSACHUSETTS
SCOTT R. BRUSO
STRUCTURAL
No. 49061
REGISTERED PROFESSIONAL ENGINEER
2025.03.24 15:24:58 -04'00'

Issued For:
BIDDING

Scale: AS NOTED

Date: MARCH 2025
Drawn By: BMG
Reviewed By: BM
Approved By: SRB
W&S Project No.: ENG22-1175
W&S File No.:

Drawing Title:
PRECAST GUARDRAIL TRANSITION

Sheet Number:
S-12

P:\MA\Upton MA\Grove St. Bridge\CAD\2175 CAD 1\500ppw\PrecastTransitionDetailSheet.dwg Sheet Date/Time: Sheet Date/Time: 25/10/2025 1:57:57 PM Sheet Plotted By: Brian M. Gilmore

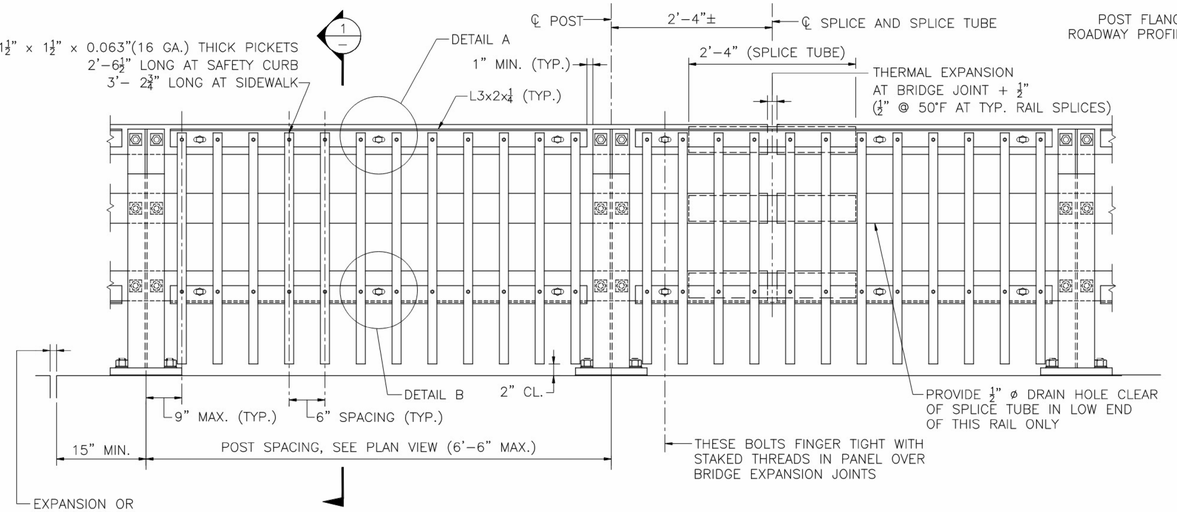


## BRIDGE RAILING ELEVATION
SCALE: 1" = 1'–0"

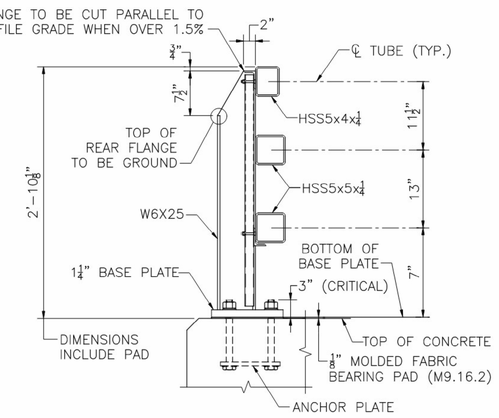


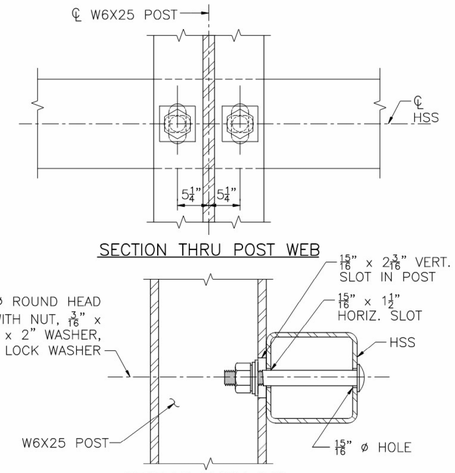


NOTE:
CONNECTIONS AT LOWER RAILS SHOWN.
CONNECTIONS AT TOP RAIL SIMILAR.

## TYPICAL RAIL TO POST CONNECTIONS
SCALE: 1" = 1'–0"

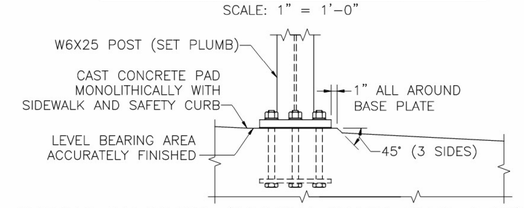


## SETTING OF POSTS (PROFILE GRADE OVER 1.5%)
SCALE: 1" = 1'–0"

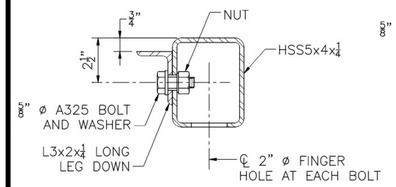


## SECTION 2

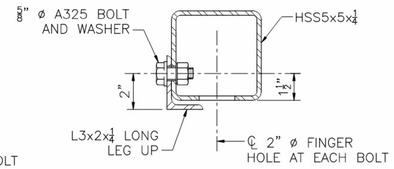


## SECTION 4

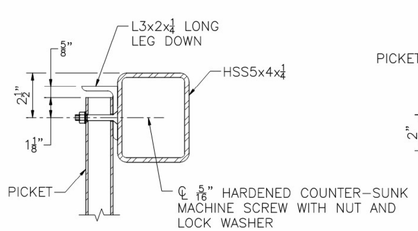


## SECTION 3

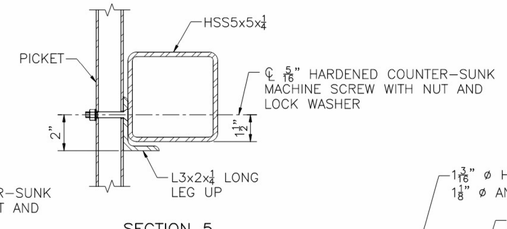


## SECTION 5

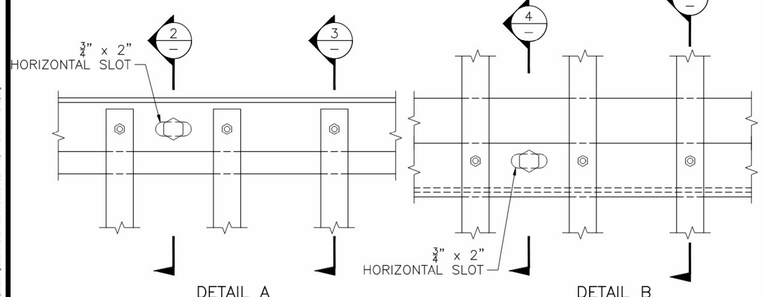


## DETAIL A

## DETAIL B

## TYPICAL PICKET TO RAIL DETAILS
SCALE: 3" = 1'–0"

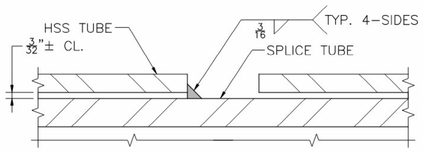


## SPLICE DETAIL
FULL SIZE

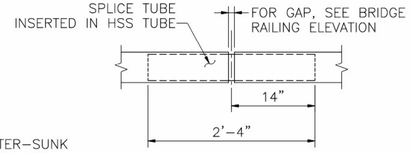


## TYPICAL SPLICE
SCALE: 1" = 1'–0"

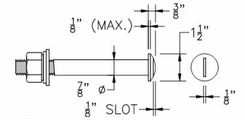


## 7/8" ø ROUND HEAD BOLT
SCALE: 3" = 1'–0"

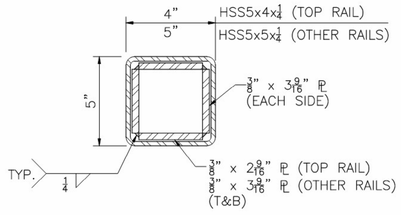


## SPLICE TUBE DETIALS
SCALE: 3" = 1'–0"

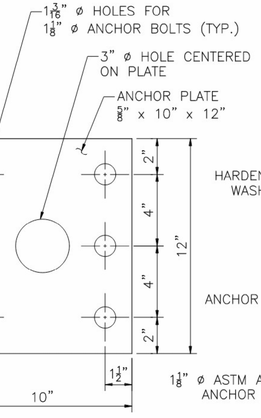


## ANCHOR PLATE
SCALE: 3" = 1'–0"

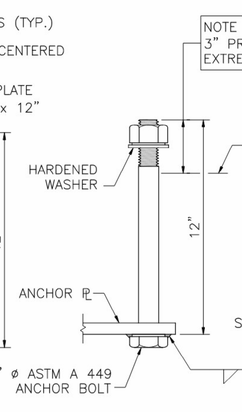


## ANCHOR BOLT
SCALE: 3" = 1'–0"

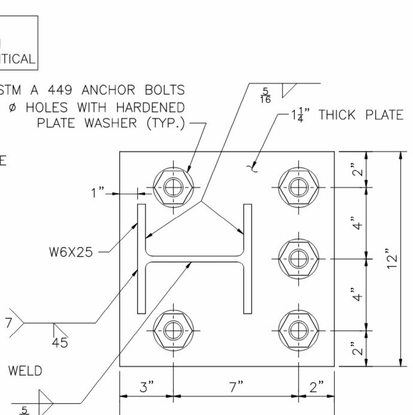


## BASE PLATE
SCALE: 3" = 1'–0"

## RAILING NOTES:

1. RAIL POST AND BASE PLATES SHALL CONFORM TO THE REQUIREMENTS OF AASHTO M 270 GRADE 50. HOLLOW RAILING STRUCTURAL TUBING (HSS) SHALL CONFORM TO THE REQUIREMENTS OF ASTM A 500 WITH A CERTIFIED Fy = 50 KSI MINIMUM. THE MINIMUM HORIZONTAL BENDING RADII OF THE HSS TUBING SHALL BE 8 FEET. PICKET CARRIER ANGLES, ANCHOR PLATES, AND SPLICE TUBE PLATES SHALL CONFORM TO THE REQUIREMENTS OF AASHTO M 270 GRADE 36. PICKET TUBING SHALL CONFORM TO ASTM A 513 WITH Fy = 36 KSI MIN. OR A 500 GRADE B.
2. ALL STEEL (EXCEPT THE ⅝" ANCHOR PLATE AND FASTENERS) SHALL BE GALVANIZED AND PAINTED DARK BRONZE (COLOR TO BE APPROVED BY TOWN PRIOR TO FABRICATION). ANCHOR PLATE SHALL BE GALVANIZED ONLY. HEADS OF ⅞" ø ROUND HEAD BOLTS SHALL BE PAINTED TO MATCH RAIL.
3. ANCHOR BOLTS SHALL BE SET WITH TEMPLATES. THE NUT SECURING THE POST BASE PLATE TO THE CONCRETE SHALL BE TIGHTENED TO A SNUG FIT AND GIVEN AN ADDITIONAL 1/8 TURN AFTER STEEL IS IN PLACE.
4. RAILS SHALL BE CONTINUOUS OVER A MINIMUM OF FOUR (4) POSTS WITHOUT SPLICES WHERE POSSIBLE. RAILS SHALL BE SPLICED IN THE PANELS OVER EXPANSION JOINT.
5. ENDS OF TUBE SECTIONS SHALL BE SAWED. GRIND SMOOTH EXPOSED EDGES. ALL CUT ENDS SHALL BE TRUE AND SMOOTH.
6. ALL POSTS TO BE PLUMB WHEN PROFILE GRADE EXCEEDS 1.5%. FOR PROFILE GRADES LESS THAN 1.5%, POSTS SHALL BE SET PERPENDICULAR TO GRADE.
7. POST FLANGE WELD DOES NOT REQUIRE MAGNETIC PARTICLE TESTING. WELD SHALL BE BACK–GOUGED ON BACK SIDE EXCEPT AT WEB. WELD IS THE SAME ON BOTH FLANGES.
8. ⅞" ø ROUND HEAD BOLTS SHALL CONFORM TO THE CHEMICAL AND PHYSICAL REQUIREMENTS OF AASHTO M 164.

| * |
|---|
| CRH |
| CRJ |

**COMMONWEALTH OF MASSACHUSETTS**
**MassDOT, Highway Division**
CONCEPTUAL DESIGN IS ACCEPTABLE TO
MASSDOT FOR CONTRACTING
Mohammed Nabulsi, P.E.
DISTRICT 3 BRIDGE ENGINEER — DATE

BRIDGE SHEET 13 OF 18. BRIDGE NO. U-01-004 (*)

# S3–TL4 BRIDGE RAILING

Project:
GROVE STREET BRIDGE
UPTON, MA 01568

TOWN OF UPTON INCORPORATED JUNE 14, 1735 MASSACHUSETTS


Weston & Sampson
Weston & Sampson Engineers, Inc.
100 Foxborough Boulevard, Suite 250
Foxborough, MA 02035
978.532.1900 800.SAMPSON
www.westonandsampson.com


Consultants:

Revisions:

| No. | Date | Description |
|---|---|---|
| | | |
| | | |
| | | |
| | | |
| | | |
| | | |
| | | |
| | | |

COA:

Seal:
COMMONWEALTH OF MASSACHUSETTS
SCOTT R. BRUSO
STRUCTURAL
No. 48061
REGISTERED
PROFESSIONAL ENGINEER
2025.03.24 16:04:27 -04'00'

Issued For:
BIDDING

Scale: AS NOTED

| | |
|---|---|
| Date: | MARCH 2025 |
| Drawn By: | BMG |
| Reviewed By: | BM |
| Approved By: | SRB |
| W&S Project No.: | ENG22-1175 |
| W&S File No.: | |

Drawing Title:
S3-TL4 BRIDGE RAILING

Sheet Number:
S-13


COPYRIGHT © 2021 WESTON & SAMPSON, INC.


P:\MA\Upton MA\Grove St Bridge\CAD\2210-CAD 1000ppi\Power\Drawings\Detail\Sht Sheet Files\Rail Sheet 2\W2B811-1\XTBN0T0W.S MA.MD.dwg

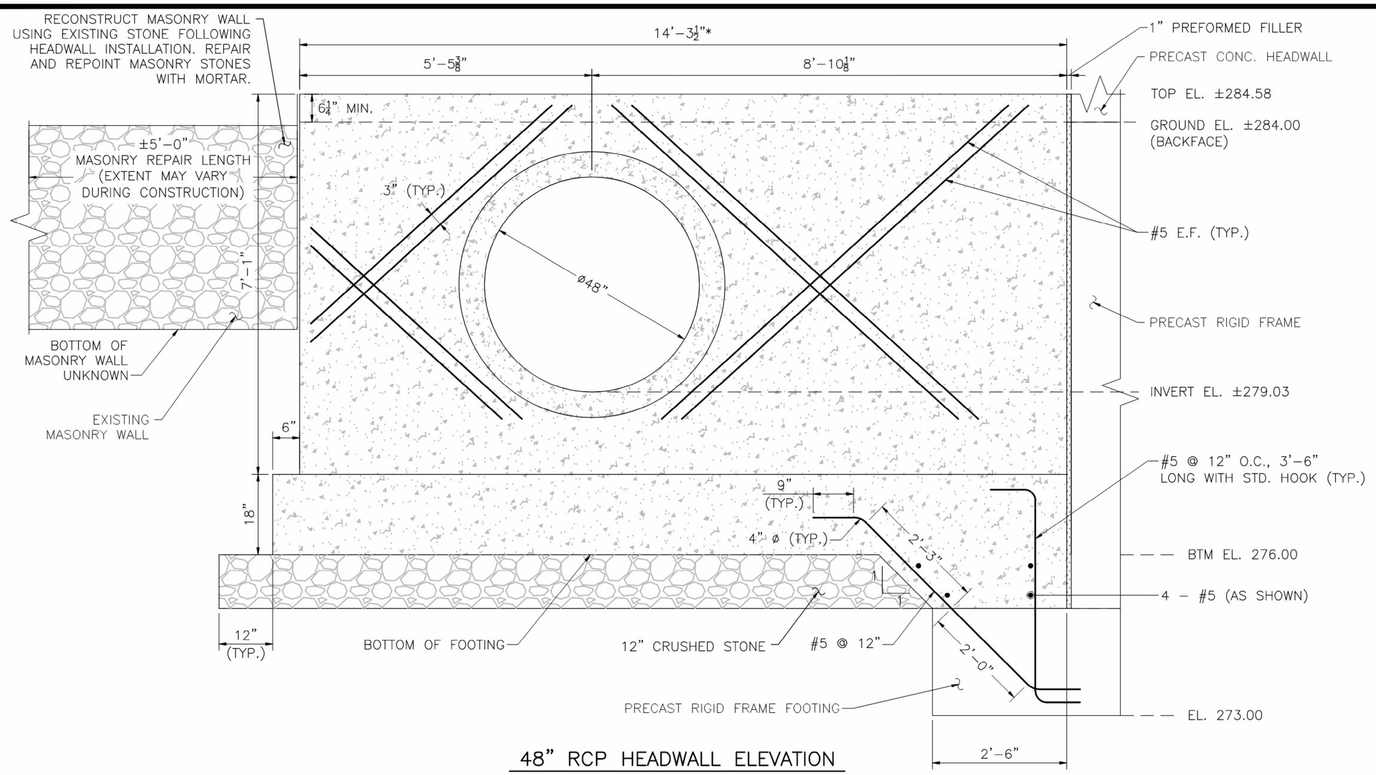


## 48" RCP HEADWALL ELEVATION

SCALE: ¾" = 1'-0"

* LENGTH TO BE VERIFIED PRIOR TO FABRICATION

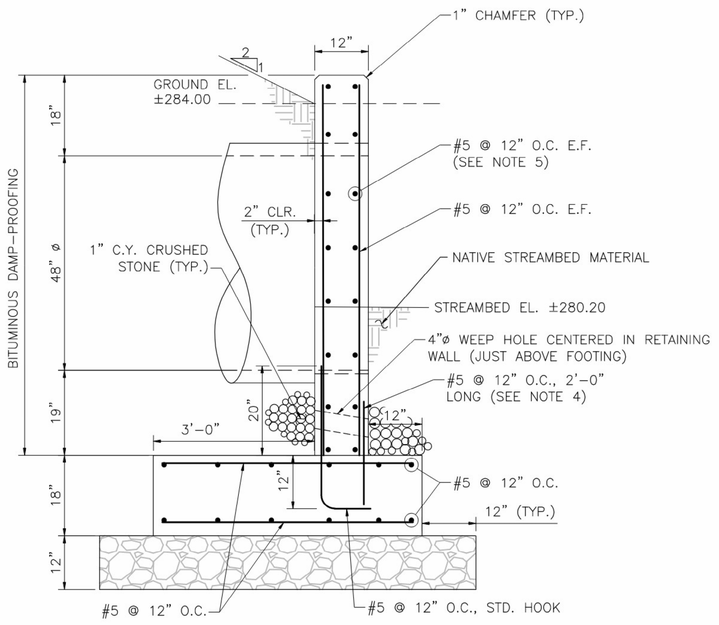


## 48" RCP HEADWALL SECTION

SCALE: ¾" = 1'-0"

48" RCP HEADWALL BEARING PRESSURE NOTES:

1. FOOTING DESIGN BASED ON A FACTORED BEARING PRESSURE OF 2.92 KSF PER AASHTO LRFD BRIDGE DESIGN SPECIFICATIONS STRENGTH I LOAD COMBINATION.
2. THE FACTORED BEARING RESISTANCE = 3.70 KSF. FACTORED BEARING RESISTANCE IS THE PRODUCT OF THE NOMINAL BEARING RESISTANCE AND A RESISTANCE FACTOR OF 0.45.

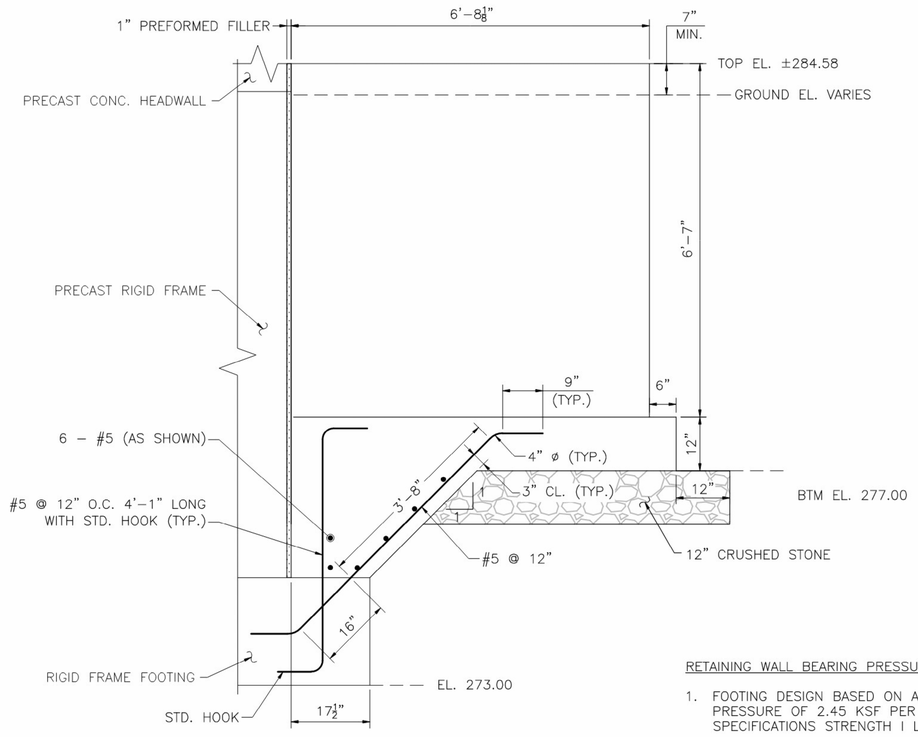


## RETAINING WALL ELEVATION

SCALE: ¾" = 1'-0"

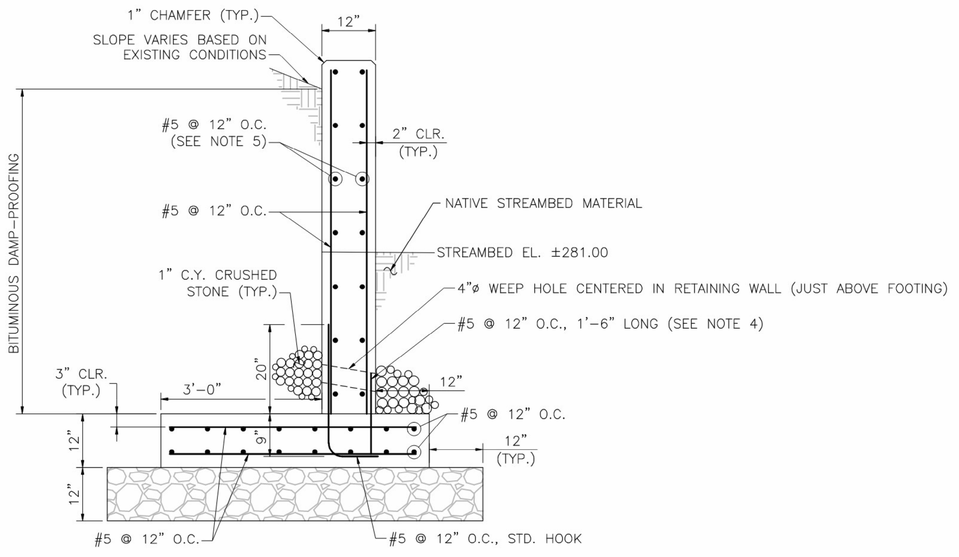


## RETAINING WALL SECTION

SCALE: ¾" = 1'-0"

RETAINING WALL BEARING PRESSURE NOTES:

1. FOOTING DESIGN BASED ON A FACTORED BEARING PRESSURE OF 2.45 KSF PER AASHTO LRFD BRIDGE DESIGN SPECIFICATIONS STRENGTH I LOAD COMBINATION.
2. THE FACTORED BEARING RESISTANCE = 3.84 KSF. FACTORED BEARING RESISTANCE IS THE PRODUCT OF THE NOMINAL BEARING RESISTANCE AND A RESISTANCE FACTOR OF 0.45.

NOTES:

1. CONCRETE SHALL BE 4000 PSI, 1½" INCH, 565 CEMENT CONCRETE.
2. REBAR SHALL BE GRADE 60, EPOXY COATED.
3. CHAMFER ALL EXPOSED EDGES AND CORNERS TO 1".
4. ONE-HALF OF THE SPECIFIED BAR LENGTH SHALL BE EMBEDDED INTO FOOTING.
5. LONGITUDINAL REINFORCEMENT TO BE LAP SPLICED BY 20".

| * |
|---|
| CRH |
| CRJ |

**COMMONWEALTH OF MASSACHUSETTS**
**MassDOT, Highway Division**
CONCEPTUAL DESIGN IS ACCEPTABLE TO MASSDOT FOR CONTRACTING
Mohammed Nabulsi, P.E.
DISTRICT 3 BRIDGE ENGINEER — DATE

BRIDGE SHEET 14 OF 18. BRIDGE NO. U-01-004 (*)

Project:
GROVE STREET BRIDGE
UPTON, MA 01568

TOWN OF UPTON INCORPORATED JUNE 14, 1735 MASSACHUSETTS


Weston & Sampson

Weston & Sampson Engineers, Inc.
100 Foxborough Boulevard, Suite 250
Foxborough, MA 02035
978.532.1900 800.SAMPSON
www.westonandsampson.com


Consultants:

Revisions:

| No. | Date | Description |
|---|---|---|
| | | |
| | | |
| | | |
| | | |
| | | |
| | | |
| | | |
| | | |

COA:

Seal:
COMMONWEALTH OF MASSACHUSETTS
SCOTT R. BRUSO
STRUCTURAL
No. 48061
REGISTERED PROFESSIONAL ENGINEER
2025.03.24 16:24:12-04'00'

Issued For:
BIDDING

Scale: AS NOTED

| | |
|---|---|
| Date: | MARCH 2025 |
| Drawn By: | SAP |
| Reviewed By: | BM/RPM |
| Approved By: | SRB |
| W&S Project No.: | ENG22-1175 |
| W&S File No.: | |

Drawing Title:
48" RCP HEADWALL AND RETAINING WALL DETAILS

Sheet Number:
S-14

COPYRIGHT © 2021 WESTON & SAMPSON, INC.

P:\MA\Upton MA\Grove St. Bridge\ACAD\75 CAD 11X17\Upton\Plan\Drawing Data\Plan Sheet Data\Plan Sheet (NOSSBR1HC01).dwg

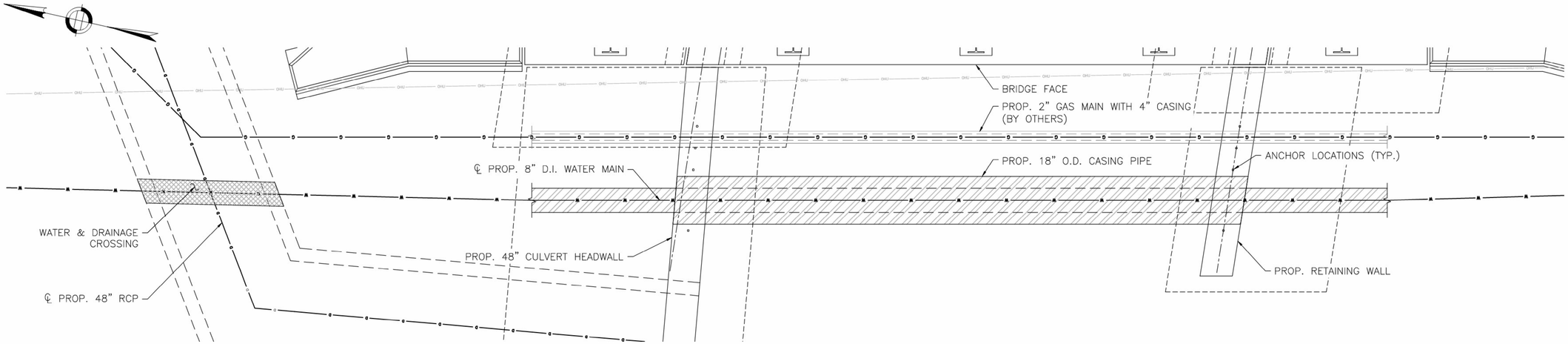


## PERMANENT UTILITY SUPPORT PLAN

SCALE: 1" = 20'

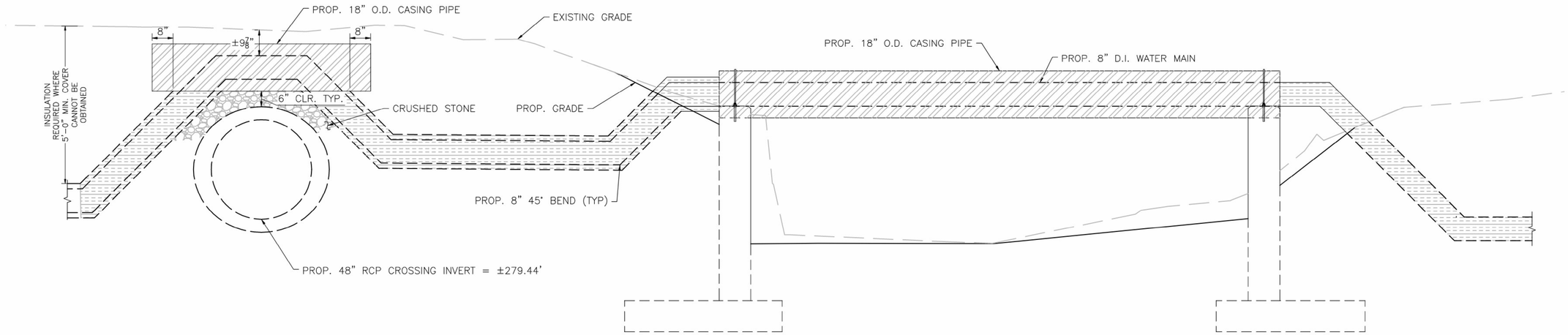


## PERMANENT UTILITY SUPPORT ELEVATION

SCALE: 1" = 20'

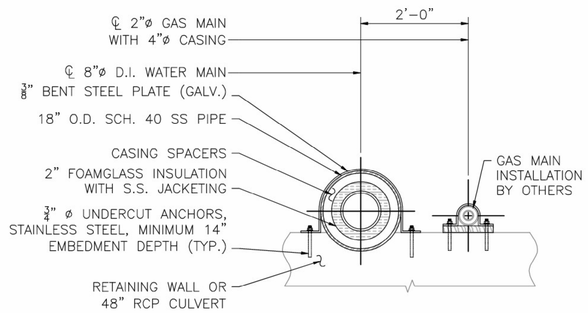


NOTES:

1. GAS WORK SHALL BE COORDINATED WITH THE GAS UTILITY COMPANY.
2. RETAINING WALL AND 48" HEADWALL REINFORCEMENT TO BE COORDINATED WITH UTILITY SUPPORT ANCHOR LOCATIONS.

## PERMANENT UTILITY SUPPORT DETAIL

SCALE: ¾" = 1'–0"

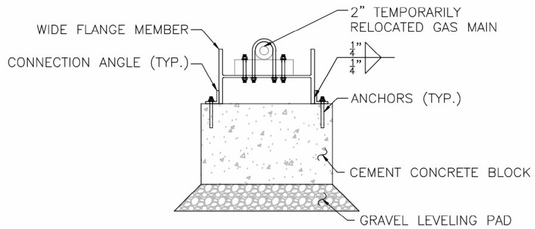


NOTES:

1. TEMPORARY UTILITY BRIDGE IS SHOWN SCHEMATICALLY FOR BID PURPOSES ONLY. TEMPORARY UTILITY BRIDGE SHALL BE DESIGNED BY THE CONTRACTOR AND STAMPED BY A PROFESSIONAL ENGINEER LICENSED IN THE COMMONWEALTH OF MASSACHUSETTS. REFER TO TEMPORARY UTILITY BRIDGE SECTION IN SPECIFICATIONS FOR DESIGN INFORMATION AND REQUIREMENTS.
2. SHOP DRAWINGS AND CALCULATIONS SHALL BE SUBMITTED TO ENGINEER.
3. ALL WORK SHALL BE COORDINATED WITH THE GAS UTILITY COMPANY.

## TEMPORARY UTILITY SUPPORT DETAIL

SCALE: ¾" = 1'–0"

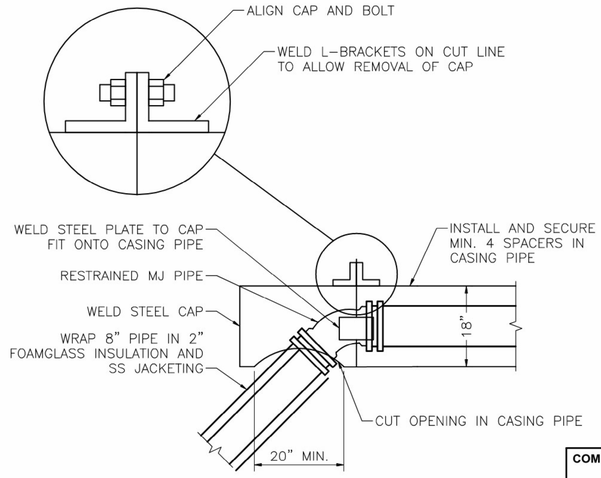


## CASING PIPE CAP DETAIL

SCALE: ¾" = 1'–0"

**COMMONWEALTH OF MASSACHUSETTS**
**MassDOT, Highway Division**
CONCEPTUAL DESIGN IS ACCEPTABLE TO MASSDOT FOR CONTRACTING
Mohammed Nabulsi, P.E.
DISTRICT 3 BRIDGE ENGINEER — DATE

| * |
|---|
| CRH |
| CRJ |



P:\MA\Upton MA\Grove St. Bridge\CAD\2315.CAD.10\Bridge\Permit Drawing Data\Plan Sheet Data\Plan Sheet 2\W2BRIDGUTL17.DLG\PERPT.dwg

Project:
GROVE STREET BRIDGE
UPTON, MA 01568

Weston & Sampson
Weston & Sampson Engineers, Inc.
100 Foxborough Boulevard, Suite 250
Foxborough, MA 02035
978.532.1900 800.SAMPSON
www.westonandsampson.com

Consultants:

Revisions:

| No. | Date | Description |
|---|---|---|
| | | |
| | | |
| | | |
| | | |
| | | |
| | | |
| | | |
| | | |

COA:

Seal:
COMMONWEALTH OF MASSACHUSETTS
SCOTT R. BRUSO
STRUCTURAL
No. 48061
REGISTERED PROFESSIONAL ENGINEER
2025.03.24 16:23:49-04'00'

Issued For:
BIDDING

Scale: AS NOTED

Date: MARCH 2025
Drawn By: SAP
Reviewed By: MW/RPM
Approved By: SRB
W&S Project No.: ENG22-1175
W&S File No.:

Drawing Title:
UTILITY SUPPORT DETAILS

Sheet Number:
S-15

COPYRIGHT © 2021 WESTON & SAMPSON, INC.

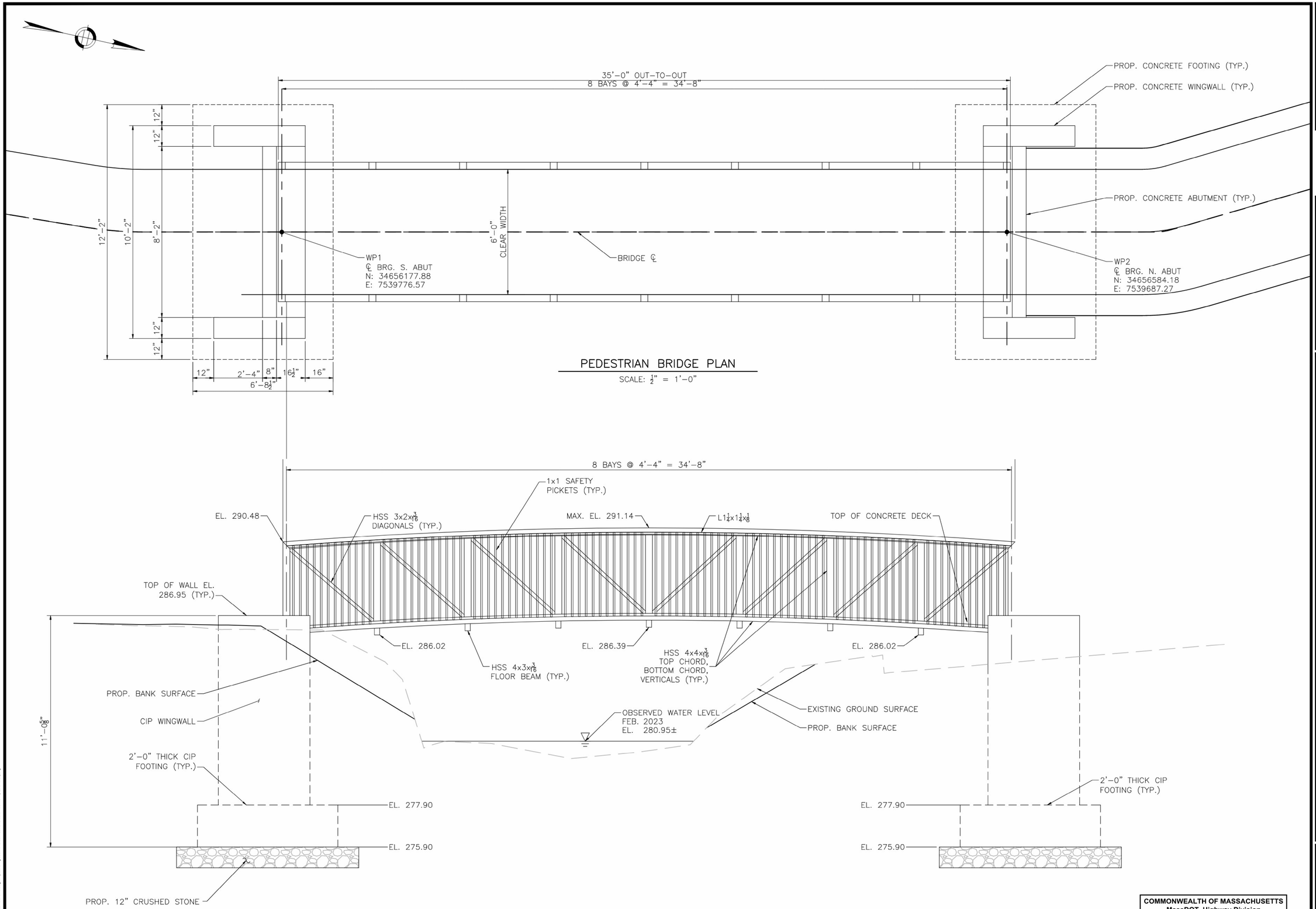


PEDESTRIAN BRIDGE PLAN

SCALE: ½" = 1'-0"

PEDESTRIAN UPSTREAM BRIDGE ELEVATION

SCALE: ½" = 1'-0"

| * |
|---|
| CRH |
| CRJ |

**COMMONWEALTH OF MASSACHUSETTS**
**MassDOT, Highway Division**
CONCEPTUAL DESIGN IS ACCEPTABLE TO MASSDOT FOR CONTRACTING

Mohammed Nabulsi, P.E.
Mohammed Nabulsi, P.E. (Mar 26, 2025 10:14 EDT)
DISTRICT 3 BRIDGE ENGINEER — DATE

BRIDGE SHEET 16 OF 18. BRIDGE NO. U-01-004 (*)

Project:
GROVE STREET BRIDGE
UPTON, MA 01568

TOWN OF UPTON INCORPORATED JUNE 14, 1735 MASSACHUSETTS


Weston & Sampson
Weston & Sampson Engineers, Inc.
100 Foxborough Boulevard, Suite 250
Foxborough, MA 02035
978.532.1900 800.SAMPSON
www.westonandsampson.com


Consultants:

Revisions:

| No. | Date | Description |
|---|---|---|

COA:

Seal:
COMMONWEALTH OF MASSACHUSETTS SCOTT R. BRUSO STRUCTURAL No. 48061 REGISTERED PROFESSIONAL ENGINEER
2025.03.24 16:23:29-04'00'

Issued For:
BIDDING

Scale: AS NOTED

| | |
|---|---|
| Date: | MARCH 2025 |
| Drawn By: | BMG/SAP |
| Reviewed By: | BM/RPM |
| Approved By: | SRB |
| W&S Project No.: | ENG22-1175 |
| W&S File No.: | |

Drawing Title:
PEDESTRIAN BRIDGE PLAN & ELEVATION

Sheet Number:
S-16

COPYRIGHT © 2021 WESTON & SAMPSON, INC.

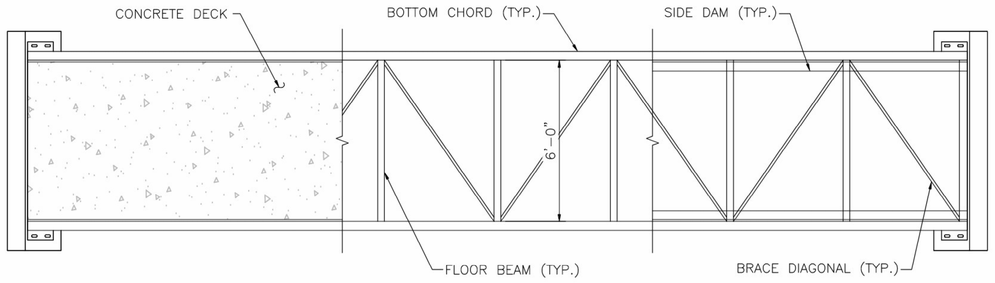


DECK BRACING FRAMING

## PEDESTRIAN BRIDGE SUPERSTRUCTURE PLAN

SCALE: $\frac{3}{8}$" = 1'-0"

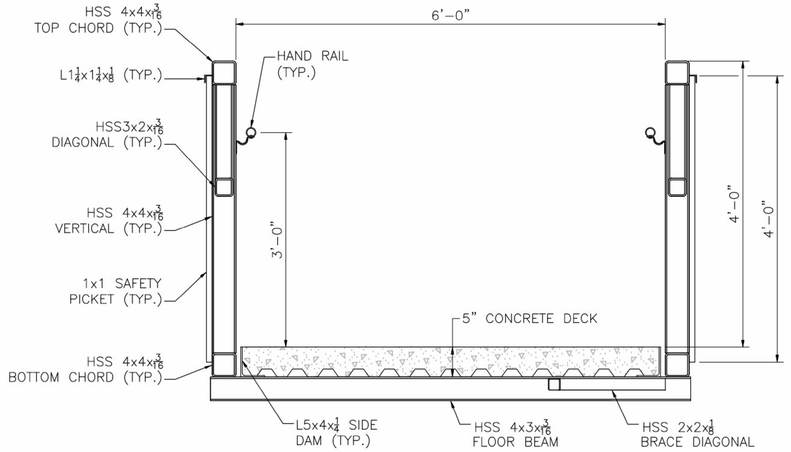


## PEDESTRIAN BRIDGE CROSS-SECTION

SCALE: 1" = 1'-0"

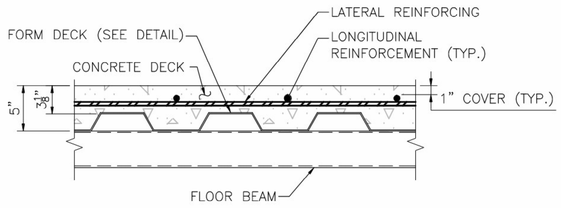


## DECK REINFORCEMENT DETAIL

SCALE: $1\frac{1}{2}$" = 1'-0"

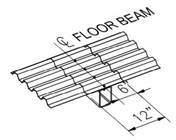


## FORM DECK DETAIL

NOT TO SCALE

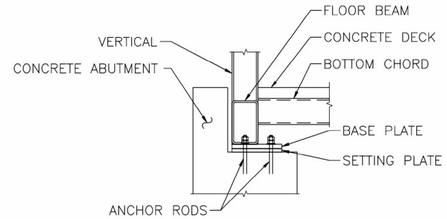


## BEARING DETAIL

SCALE: 3" = 1'-0"

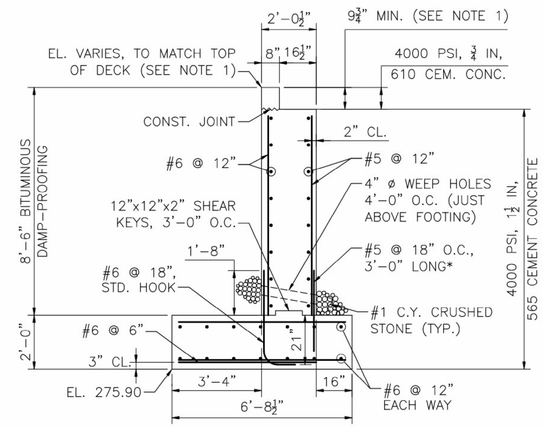


* ONE-HALF OF THE BAR LENGTH SHALL BE EMBEDDED INTO THE FOOTING.

## ABUTMENT SECTION

SCALE: $\frac{3}{8}$" = 1'-0"

NOTES:

1. PEDESTRIAN BRIDGE STEEL TRUSS IS TO BE DESIGNED BY BRIDGE MANUFACTURER, INCLUDING MEMBER SIZES AND BEARING DETAILS. DESIGN LOADING AND DESIGN REQUIREMENTS ARE PROVIDED IN THE CONTRACT SPECIFICATIONS. THE DESIGN COMPUTATIONS AND SHOP DRAWINGS SHALL BE PREPARED AND STAMPED BY A PROFESSIONAL ENGINEER LICENSED TO PRACTICE IN THE COMMONWEALTH OF MASSACHUSETTS AND SUBMITTED TO THE ENGINEER FOR REVIEW AND APPROVAL.
2. FORM DECK TO BE PROVIDED AND INSTALLED BY BRIDGE MANUFACTURER.
3. THE DESIGN OF THE PEDESTRIAN BRIDGE ABUTMENT WALLS AND FOOTINGS ARE BASED ON THE MEMBER SIZES AND BRIDGE GEOMETRY SHOWN ON SHEET S-16. ANY DEVIATIONS FROM THE BASIS OF THIS DESIGN MADE BY THE BRIDGE MANUFACTURER AND THEIR DESIGN ENGINEER SHALL BE CONVEYED TO THE ENGINEER IMMEDIATELY TO DETERMINE WHETHER ADJUSTMENTS TO THE ABUTMENTS ARE REQUIRED.
4. STEEL FINISH SHALL BE A 2-COAT PAINT SYSTEM. COLOR OPTIONS AND MOCKUP SHALL BE PROVIDED PRIOR TO FABRICATION. PAINT FINISH TO BE SELECTED BY THE OWNER.
5. FOOTING DESIGN BASED ON A FACTORED BEARING PRESSURE OF 1.66 KSF PER AASHTO LRFD BRIDGE DESIGN SPECIFICATIONS STRENGTH I LOAD COMBINATION. THE ACTUAL FACTORED BEARING PRESSURE SHALL BE DETERMINED BY THE CONTRACTOR AND MEET THE REQUIREMENTS AS SPECIFIED IN THE GEOTECHNICAL REPORT.
6. THE FACTORED BEARING RESISTANCE = 5.25 KSF. FACTORED BEARING RESISTANCE IS THE PRODUCT OF THE NOMINAL BEARING RESISTANCE AND A RESISTANCE FACTOR OF 0.45.

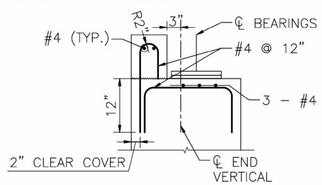


## BACKWALL DETAIL

SCALE: $\frac{3}{4}$" = 1'-0"

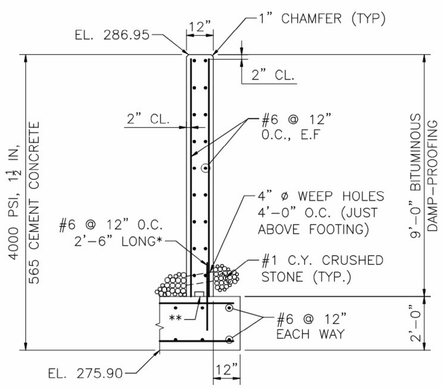


* ONE-HALF OF THE BAR LENGTH SHALL BE EMBEDDED INTO THE FOOTING.

** CONSTRUCTION JOINT WITH 4"x2" KEY.

## WINGWALL SECTION

SCALE: $\frac{3}{8}$" = 1'-0"

| * |
|---|
| CRH |
| CRJ |

**COMMONWEALTH OF MASSACHUSETTS**
**MassDOT, Highway Division**
CONCEPTUAL DESIGN IS ACCEPTABLE TO MASSDOT FOR CONTRACTING
Mohammed Nabulsi, P.E.
DISTRICT 3 BRIDGE ENGINEER — DATE



P:\All\Active MA\Grove St. Bridge\CAD\2017\Y CAD 11\Bridge\Plans\Drawing Data\Plan Sheet Files\Plan Sheet 2\W02BR-S-17BTD.DBWXD (.dwg)

Project:
GROVE STREET BRIDGE
UPTON, MA 01568

Weston & Sampson
Weston & Sampson Engineers, Inc.
100 Foxborough Boulevard, Suite 250
Foxborough, MA 02035
978.532.1900 800.SAMPSON
www.westonandsampson.com

Consultants:

Revisions:

| No. | Date | Description |
|---|---|---|
| | | |
| | | |
| | | |
| | | |
| | | |
| | | |
| | | |
| | | |

COA:

Seal:
COMMONWEALTH OF MASSACHUSETTS
SCOTT R. BRUSO
STRUCTURAL
No. 48061
REGISTERED PROFESSIONAL ENGINEER
2025.03.24 15:23:39 -04'00'

Issued For:
BIDDING

Scale: AS NOTED

Date: MARCH 2025
Drawn By: BMG/SAP
Reviewed By: BM/RPM
Approved By: SRB

W&S Project No.: ENG22-1175
W&S File No.:

Drawing Title:
PEDESTRIAN BRIDGE DETAILS

Sheet Number:
S-17

COPYRIGHT © 2021 WESTON & SAMPSON, INC.

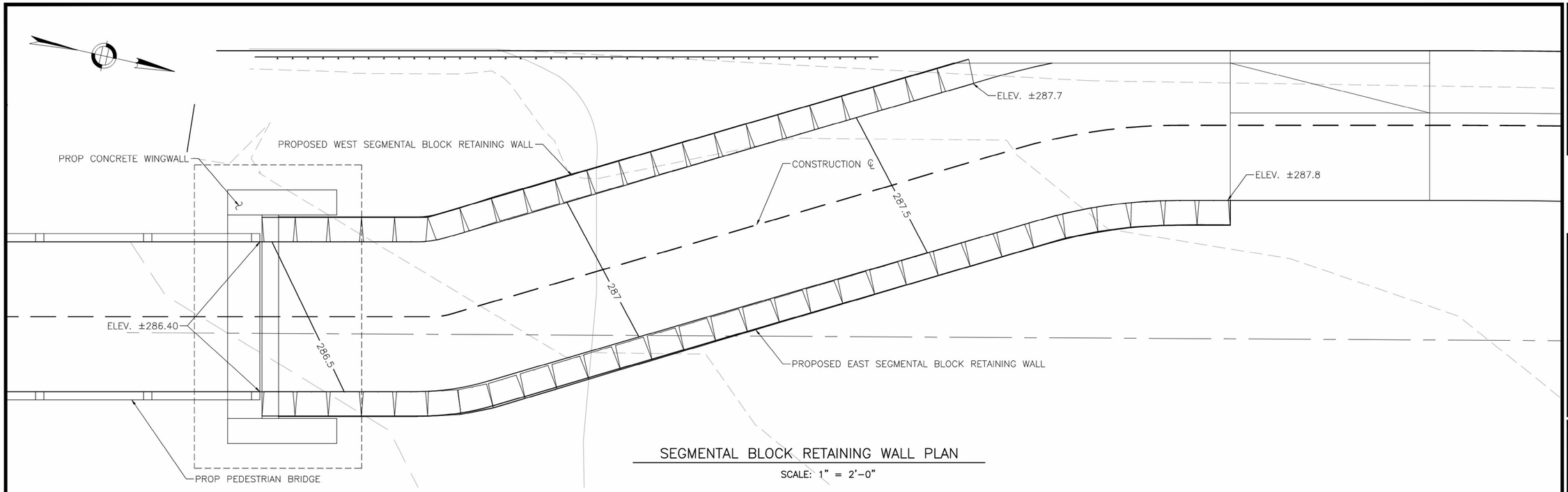


## SEGMENTAL BLOCK RETAINING WALL PLAN

SCALE: 1" = 2'-0"

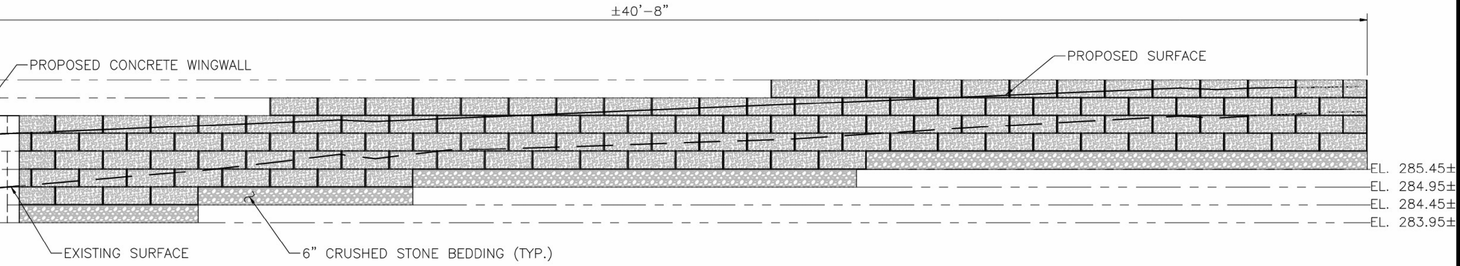


## EAST SEGMENTAL BLOCK RETAINING WALL ELEVATION

SCALE: 1" = 2'-0"

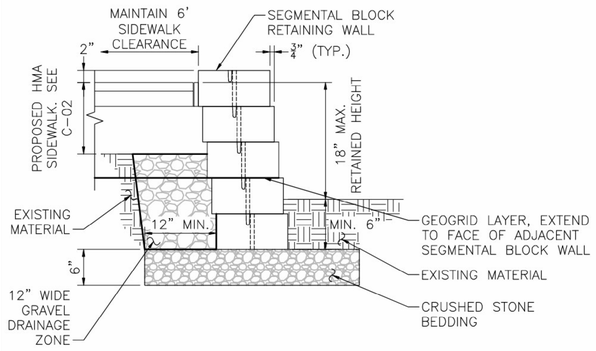


NOTES:

1. CONTRACTOR SHALL DESIGN SEGMENTAL GRAVITY RETAINING WALL DESIGN PER PLANS, SPECIFICATIONS, AND MANUFACTURER'S REQUIREMENTS. THE CONTRACTOR SHALL SUBMIT WALL STRUCTURAL CALCULATIONS AND DETAILS, STAMPED BY A STRUCTURAL ENGINEER LICENSED IN THE COMMONWEALTH OF MASSACHUSETTS FOR APPROVAL. BLOCK FINISH TO BE SELECTED BY THE CLIENT.

## SEGMENTAL BLOCK RETAINING WALL SECTION

SCALE: 1½" = 1'-0"

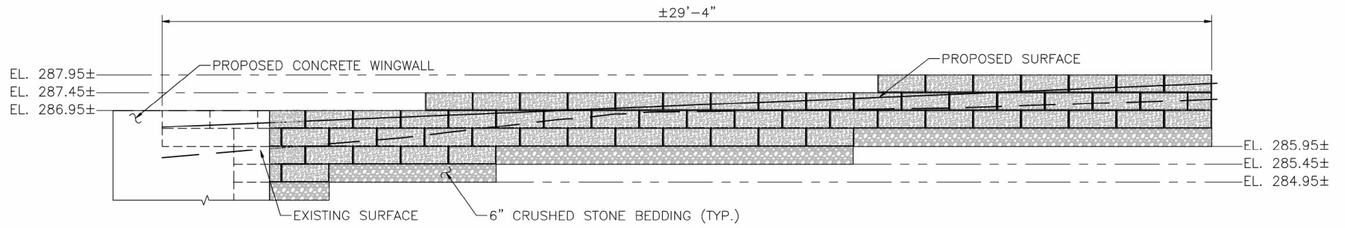


## WEST SEGMENTAL BLOCK RETAINING WALL ELEVATION

SCALE: 1" = 2'-0"

| * |
|---|
| CRH |
| CRJ |

**COMMONWEALTH OF MASSACHUSETTS**
**MassDOT, Highway Division**
CONCEPTUAL DESIGN IS ACCEPTABLE TO MASSDOT FOR CONTRACTING
Mohammed Nabulsi, P.E.
Mohammed Nabulsi, P.E. (Feb 25, 2025 10:08 EST)
DISTRICT 3 BRIDGE ENGINEER — DATE

BRIDGE SHEET 18 OF 18. BRIDGE NO. U-01-004 (*)

Project:
GROVE STREET BRIDGE
UPTON, MA 01568

TOWN OF UPTON INCORPORATED JUNE 14, 1735 MASSACHUSETTS

Weston & Sampson

Weston & Sampson Engineers, Inc.
100 Foxborough Boulevard, Suite 250
Foxborough, MA 02035
978.532.1900 800.SAMPSON
www.westonandsampson.com

Consultants:

Revisions:

| No. | Date | Description |
|---|---|---|
| | | |
| | | |
| | | |
| | | |
| | | |
| | | |
| | | |
| | | |

COA:

Seal:

COMMONWEALTH OF MASSACHUSETTS
SCOTT R. BRUSO
STRUCTURAL
No. 49061
REGISTERED PROFESSIONAL ENGINEER
2025.03.24 16:22:46-04'00'

Issued For:

BIDDING

Scale: AS NOTED

Date: MARCH 2025
Drawn By: SAP
Reviewed By: BM/RPM
Approved By: SRB
W&S Project No.: ENG22-1175
W&S File No.:

Drawing Title:

SEGMENTAL BLOCK RETAINING WALL PLAN, ELEVATION, & DETAILS

Sheet Number:

S-18

COPYRIGHT © 2021 WESTON & SAMPSON, INC.

P:\MA\Upton Mill\Grove St. Bridge\CAD\27\1 CAD 1\500sheet\Plotted Drawings Date\Plot Sheet Date\Plot Sheet\DW\SBR1\SBRTAINING WALL1.dwg