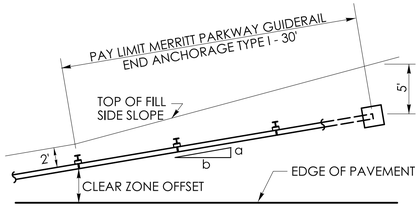

PLAN

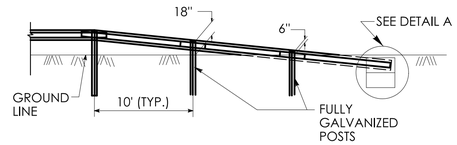

ELEVATION

MERRITT PARKWAY GUIDERAIL END ANCHORAGE TYPE I (BURIED ANCHOR)

NOTE: SEE PLAN SHEETS FOR FLARE RATE a:b.

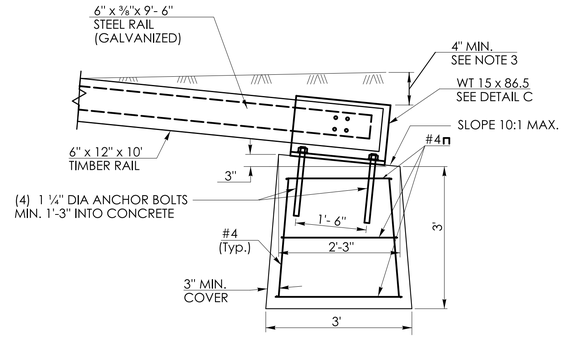

ELEVATION
DETAIL A

GENERAL NOTES:

1. MATERIALS AND CONSTRUCTION OF THE MERRITT PARKWAY GUIDERAIL END ANCHORS SHALL CONFORM TO THE SPECIAL PROVISIONS PROVIDED WITH THE PROJECT. ALL HARDWARE IN CONTACT WITH THE GROUND SHALL BE GALVANIZED IN ACCORDANCE WITH THE SPECIAL PROVISION.
2. FOR THE END ANCHOR TYPE II, EXTEND THE FLARE INTO THE CUT SLOPE UNTIL A MINIMUM 12" OF COVER IS OBTAINED OVER THE GUIDERAIL ELEMENT.
3. FOR THE END ANCHOR TYPE I, EXTEND THE FLARE OUTSIDE THE CLEAR ZONE AND BURY THE GUIDERAIL ANCHOR AND ELEMENT TO OBTAIN A MINIMUM COVER OF 4". SEE DETAIL A.
4. BEGIN THE FLARE AT THE NEAREST POST TO A TRANSITION POINT BETWEEN FILL AND CUT AS DIRECTED BY THE ENGINEER.
5. THE GUIDERAIL FLARE SHOWN ON THE PLAN SHEETS IS THE MINIMUM LENGTH AND RATE REQUIRED AS DIRECTED BY THE ENGINEER. FLARE THE GUIDERAIL SO THAT THE TERMINAL SECTION IS OUTSIDE THE CLEAR ZONE.

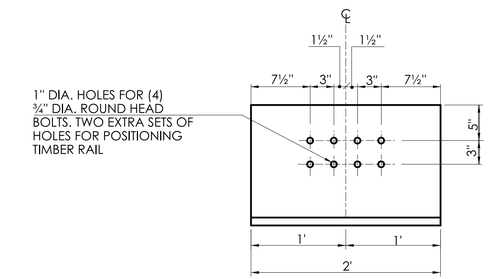

ELEVATION
DETAIL C
WT 15 x 86.5 (GALVANIZED)

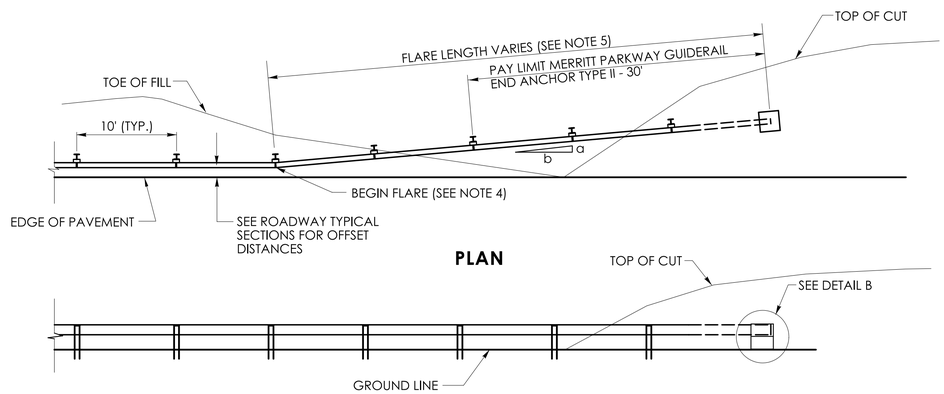

PLAN

ELEVATION

MERRITT PARKWAY GUIDERAIL END ANCHORAGE TYPE II (EARTH CUT SLOPE ANCHOR)

NOTE: SEE PLAN SHEETS FOR FLARE RATE a:b.

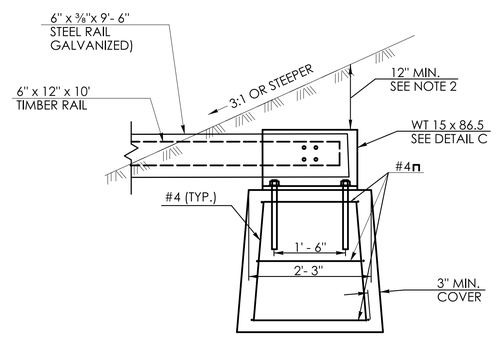

ELEVATION
DETAIL B

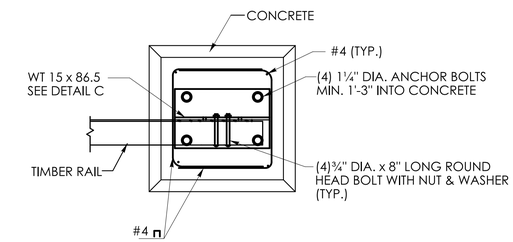

PLAN
DETAIL D

PLAN VIEW FOR
TYPE I & II ANCHOR

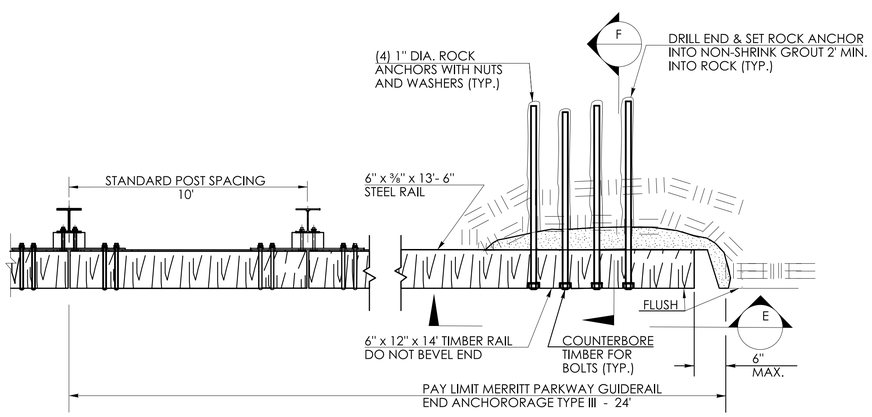

PLAN

MERRITT PARKWAY GUIDERAIL END ANCHORAGE TYPE III (ROCK CUT ANCHOR)

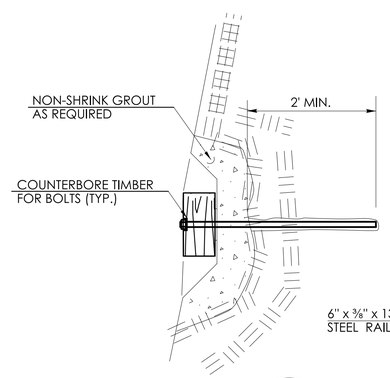

SECTION F

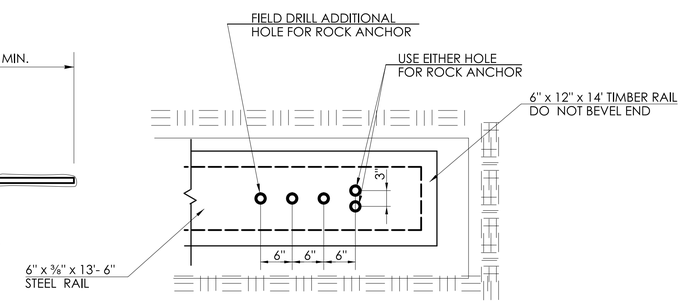

SECTION E

	NOT TO SCALE	SIGNATURE BLOCK: OFFICE OF ENGINEERING 2800 BERLIN TURNPIKE NEWINGTON, CT 06111	SUBMITTED BY: Digitally signed by Leo Fontaine, P.E. Date: 2024.12.19 15:04:44-05'00'	APPROVED BY: Digitally signed by Michael N. Calabrese, P.E. Date: 2025.01.29 12:41:48-05'00'	CTDOT CONNECTICUT DEPARTMENT OF TRANSPORTATION	CTDOT STANDARD SHEET	STANDARD SHEET TITLE: MERRITT PARKWAY GUIDERAIL ANCHORS	STANDARD SHEET NO.: HW-911_05

PLOTTED DATE: 10/23/2024