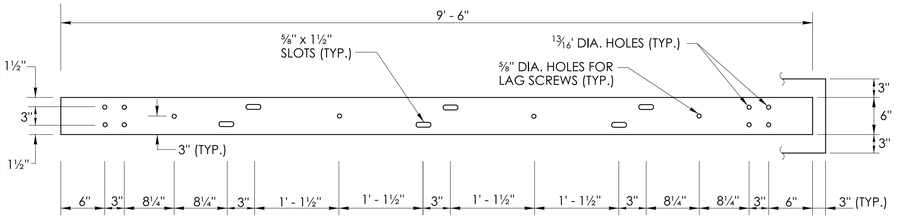

(REAR VIEW)
STANDARD STEEL RAIL DETAIL
6" x 3/8" x 9'-6"

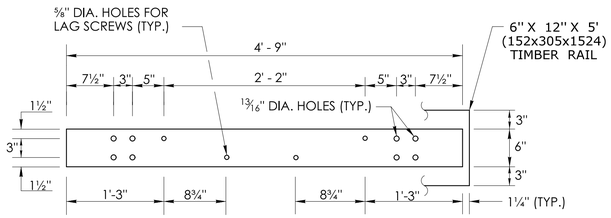

STEEL RAIL DETAIL
6' x 3/8" x 4'-9"
FOR CURVES WITH R ≤ 70"

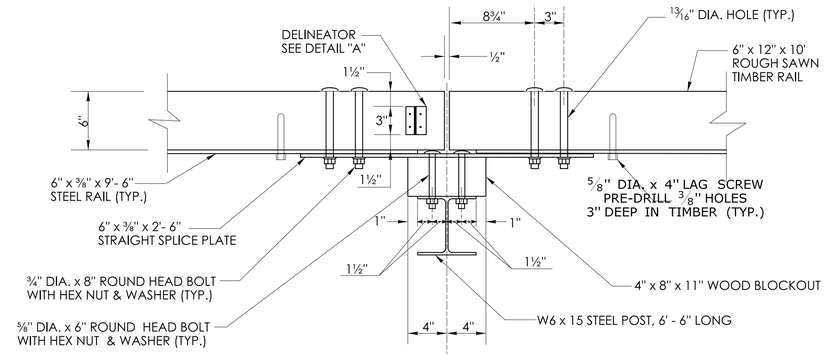

POST CONNECTION FOR
STRAIGHT SECTIONS

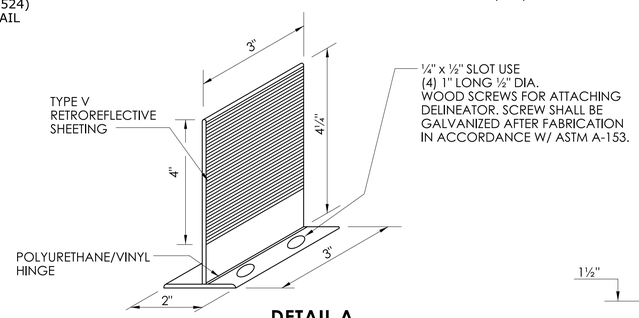

DETAIL A
DELINEATOR

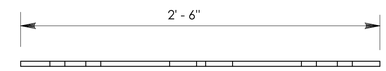

ELEVATION
STRAIGHT SPLICE PLATE

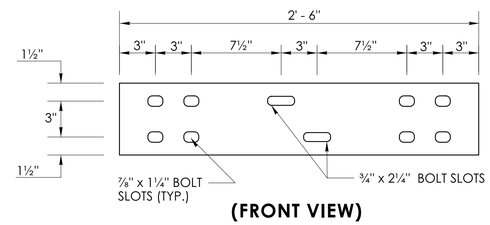

(FRONT VIEW)
STEEL SPLICE PLATE DETAIL
6" x 3/8" x 2'- 6"

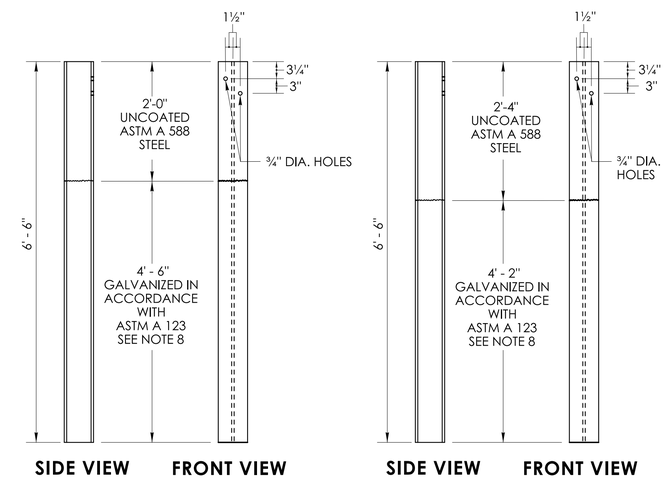

POST DETAIL
W6 X 15
WITH CURBING

POST DETAIL
W6 X 15
NO CURBING

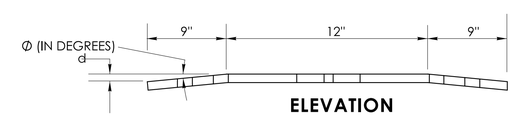

ELEVATION
BENT SPLICE PLATE

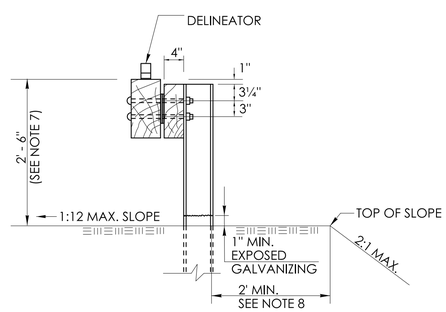

SECTION A
(NO CURB)

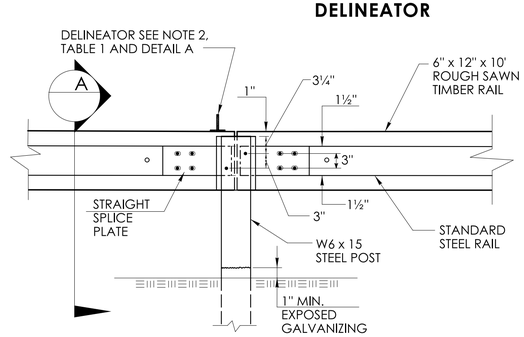

REAR VIEW ELEVATION
POST CONNECTION

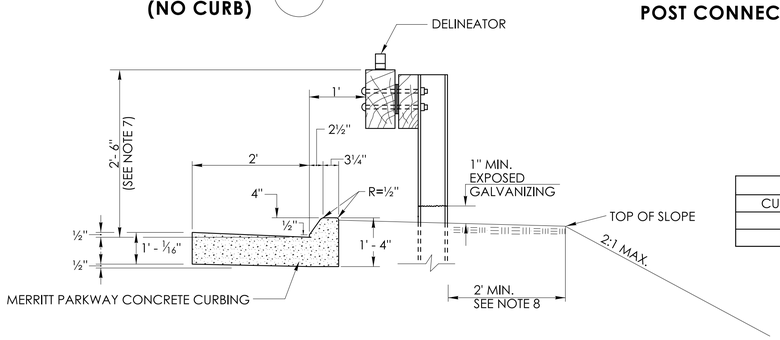

MERRITT PARKWAY CONCRETE CURBING WITH MERRITT PARKWAY GUIDERAIL

TABLE 1

DELINEATOR SPACING	
CURVE RADIUS	SPACE
< 300'	20'
≥ 300'	50'

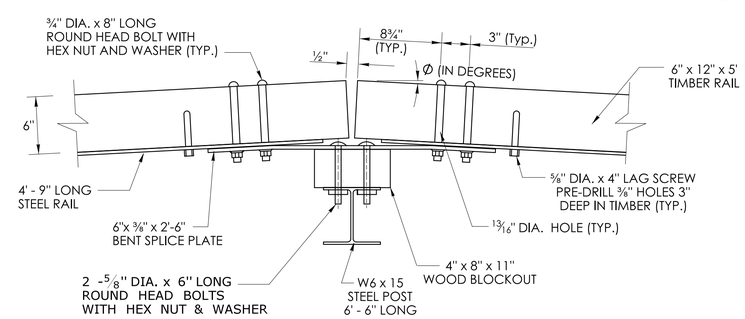

POST CONNECTION
FOR CURVES WITH R < 70'

GENERAL NOTES:

1. MATERIALS AND CONSTRUCTION OF THE MERRITT PARKWAY GUIDERAIL SHALL CONFORM TO SPECIAL PROVISION PROVIDED WITH THE PROJECT.
2. DELINEATORS SHALL BE PLASTIC INVERTED T-SECTIONS IN ACCORDANCE WITH DETAIL "A". REFLECTORS SHALL BE SPACED IN ACCORDANCE WITH TABLE 1 , AND POSITIONED PERPENDICULAR TO THE ADJACENT EDGE OF LANE. DO NOT ATTACH REFLECTORS ON FLARE OR TERMINAL SECTIONS. REFLECTIVE SHEETING SHALL BE SILVER-WHITE ON ALL RAIL SECTIONS ADJACENT TO THE RIGHT SHOULDER, AND YELLOW ON RAIL SECTIONS ADJACENT TO THE LEFT SHOULDER OF TRAVEL LANES. DELINEATORS SHALL BE INCLUDED IN THE COST FOR "MERRITT PARKWAY GUIDERAIL."
3. TWO ADDITIONAL ⅝" DIA. X 4" LONG LAG SCREWS AND WASHERS SHALL BE INSTALLED AT ALL MID-SPAN POINTS FOR STANDARD SYSTEMS.
4. ALL CONNECTION HARDWARE SHALL BE SUFFICIENTLY TIGHTENED TO ACCOMMODATE FOR SHRINKAGE OF THE WOOD ELEMENTS.
5. WHEN FURNISHING THE SHOP BENT SPLICE PLATES, USE THE MINIMUM BEND ANGLE AS SHOWN IN TABLE 2.
6. FOR RAILING SET ON A CURVE WITH RADII < 70' SPACE POSTS AT 5' .
7. GUIDERAIL HEIGHT MAY VARY UP TO 2" PLUS OR MINUS THE HEIGHT SHOWN IN THE DETAILS TO ACHIEVE A SMOOTH AND CONTINUOUS GUIDERAIL PROFILE.
8. 7'-6" LONG POSTS MAY BE USED IN LOCATIONS WHERE 2' MIN SHELF IS NOT ATTAINABLE. GALVANIZED COATING LIMITS SHALL BE INCREASED BY 1' . PAYMENT FOR EXTRA LONG POSTS SHALL BE INCLUDED WITH THE ITEM FOR MERRITT PARKWAY GUIDERAIL.

TABLE 2

Radius R (ft.)	Ø (Degrees)	d (in.)
35 Min.	4.10	⅝
40	3.58	9/16
45	3.18	½
50	2.86	7/16
55	2.60	7/16
60	2.40	⅜
65	2.20	⅜
70	2.05	5/16
Over 70	Flat	0

	NOT TO SCALE	SIGNATURE BLOCK: OFFICE OF ENGINEERING 2800 BERLIN TURNPIKE NEWINGTON, CT 06111	SUBMITTED BY: Digitally signed by Leo Fontaine, P.E. Date: 2024.12.17 14:50:54-05'00'	APPROVED BY: Digitally signed by Michael N. Calabrese, P.E. Date: 2025.01.29 12:17:15-05'00'	CTDOT CONNECTICUT DEPARTMENT OF TRANSPORTATION	CTDOT STANDARD SHEET	STANDARD SHEET TITLE: MERRITT PARKWAY GUIDERAIL HARDWARE DETAILS	STANDARD SHEET NO.: HW-910_12b

PLOTTED DATE: 10/22/2024