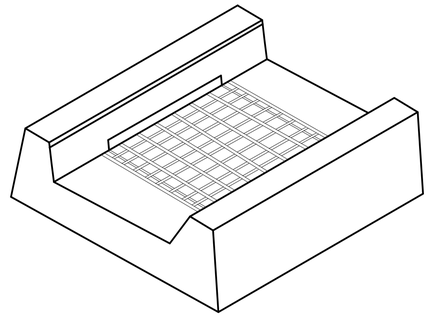

TYPE "C-G" CATCH BASIN TOP

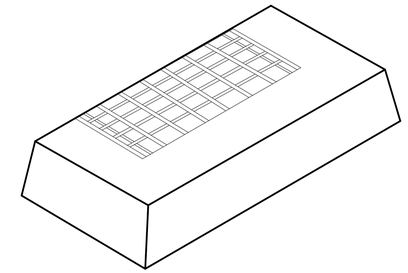

TYPE "C-M" BARRIER CURB CATCH BASIN TOP

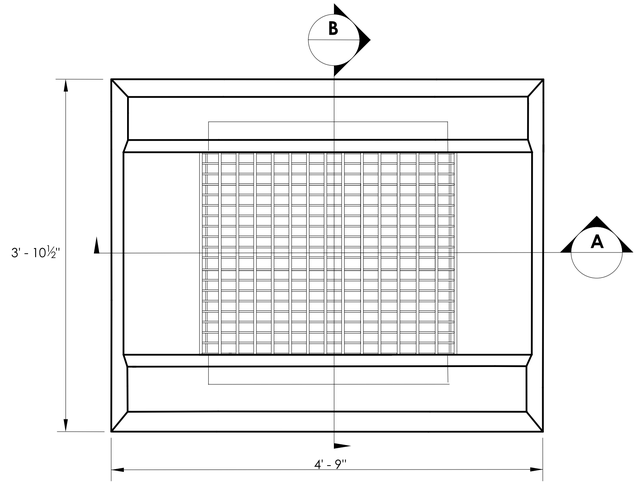

PLAN

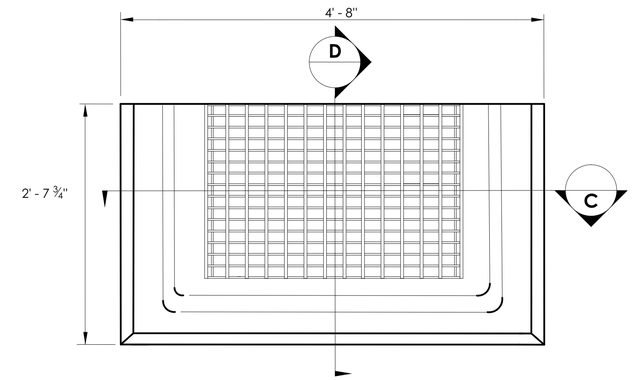

PLAN

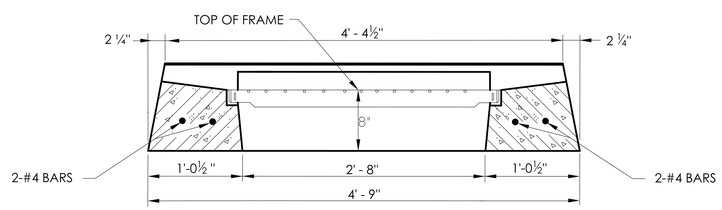

SECTION A

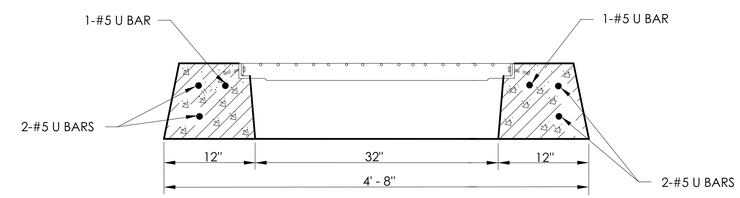

SECTION C

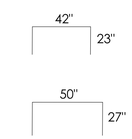

U BARS

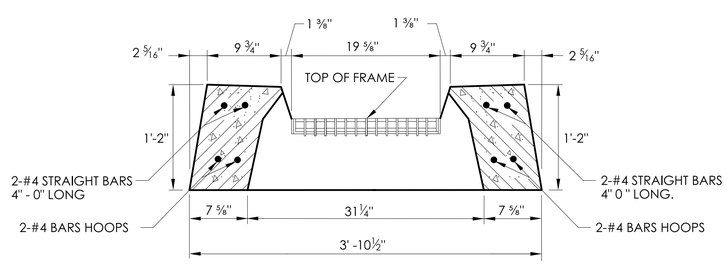

SECTION B

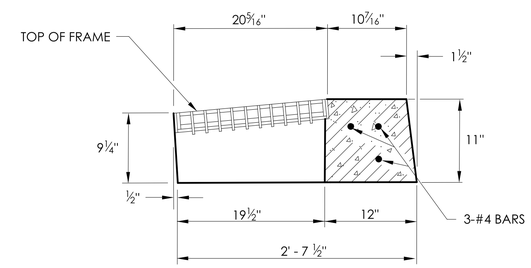

SECTION D

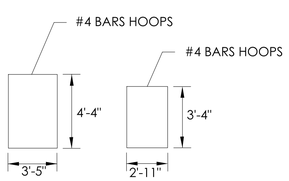

BAR HOOPS

	NOT TO SCALE	SIGNATURE BLOCK: OFFICE OF ENGINEERING 2800 BERLIN TURNPIKE NEWINGTON, CT 06111	SUBMITTED BY: Digitally signed by Leo Fontaine, P.E. Date: 2024.12.16 10:20:05-05'00'	APPROVED BY: Digitally signed by Michael N. Calabrese, P.E. Date: 2025.01.21 12:56:09-05'00'	CTDOT CONNECTICUT DEPARTMENT OF TRANSPORTATION	CTDOT STANDARD SHEET	STANDARD SHEET TITLE: CATCH BASIN TYPE "C-G" AND "C-M" BARRIER CURB TOPS	STANDARD SHEET NO.: HW-586_07d

PLOTTED DATE: 10/22/2024