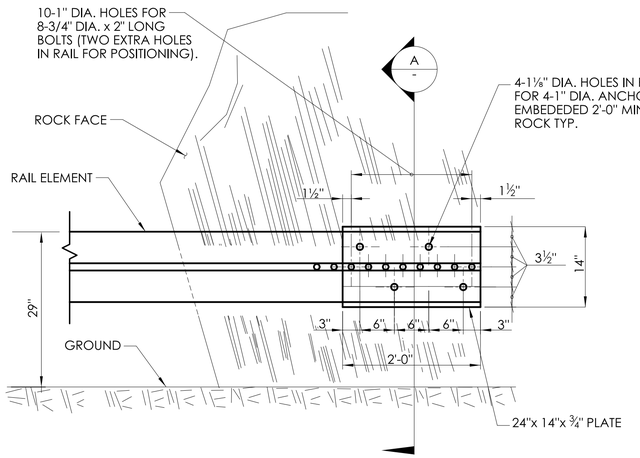

ELEVATION

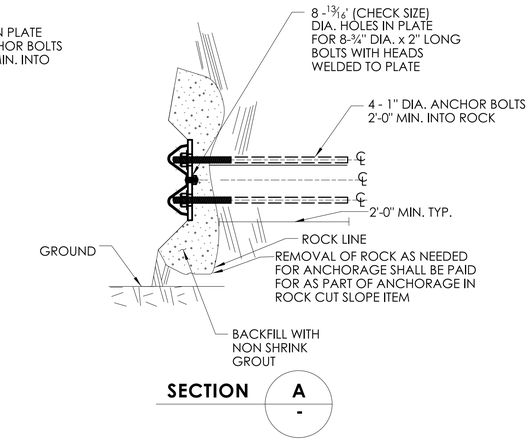

SECTION A -

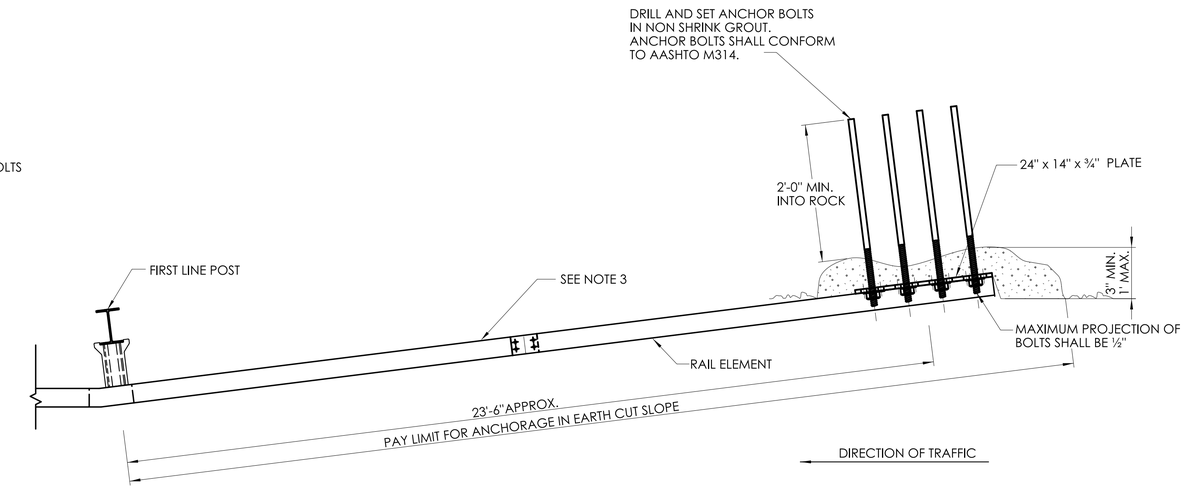

PLAN

DETAILS OF ANCHORAGE IN ROCK CUT SLOPE

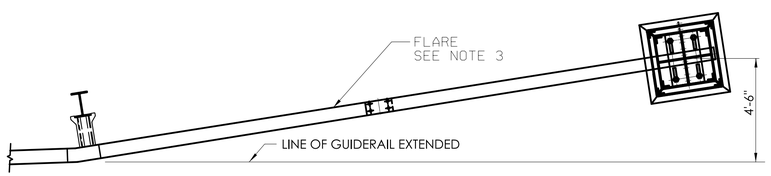

PLAN

DIRECTION OF TRAFFIC

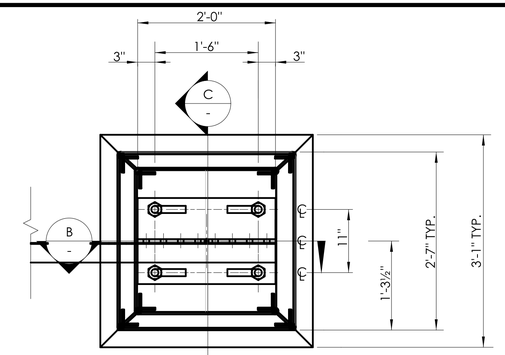

PLAN

GENERAL NOTES:

1. ANCHORAGE IN AN EARTH CUT SLOPE SHALL BE IN A CUT SLOPE 3:1 OR STEEPER. FULL RAIL HEIGHT MUST BE MAINTAINED TO TOE OF SLOPE AND A MINIMUM 1' COVER SHALL BE PROVIDED OVER THE RAIL ELEMENT.
2. ANCHORAGE IN EARTH CUT SLOPE AND ROCK CUT SLOPE INSTALLED ON LIMITED ACCESS HIGHWAYS AND RAMPS SHALL USE CLASS B TYPE II (10 GAUGE) W-BEAM RAIL ELEMENTS.
3. THE MAXIMUM FLARE RATES FOR THESE TERMINAL TREATMENTS SHALL CONFORM TO THE SAME REQUIREMENTS AS STANDARD GUIDERAIL IN ACCORDANCE WITH THE CTDOT HIGHWAY DESIGN MANUAL.
4. MINIMUM RAIL HEIGHT FOR NEW CONSTRUCTION SHALL BE 29" ± 1" .

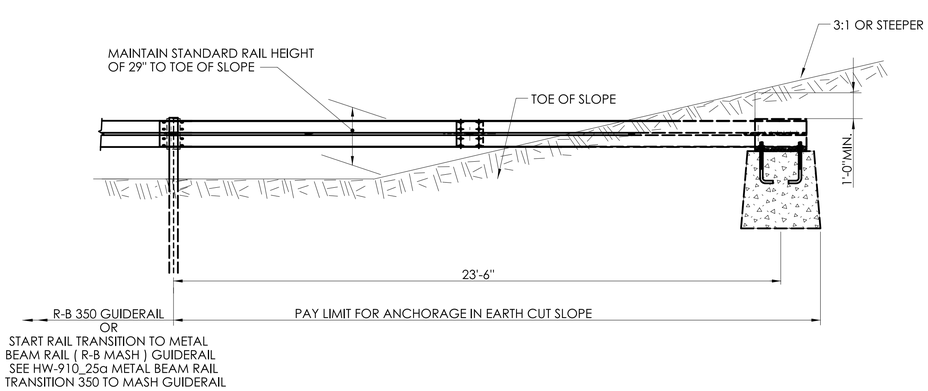

ELEVATION

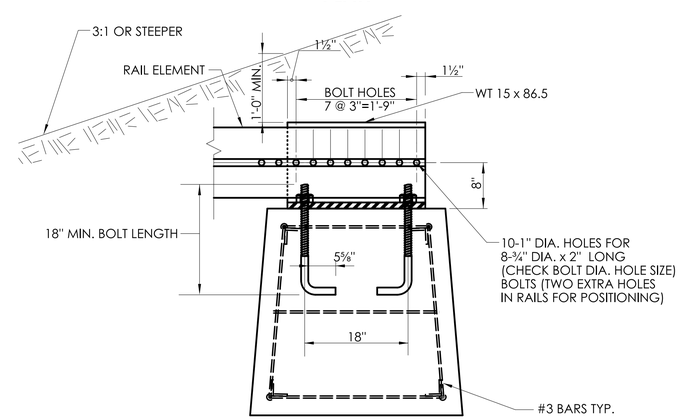

SECTION B -

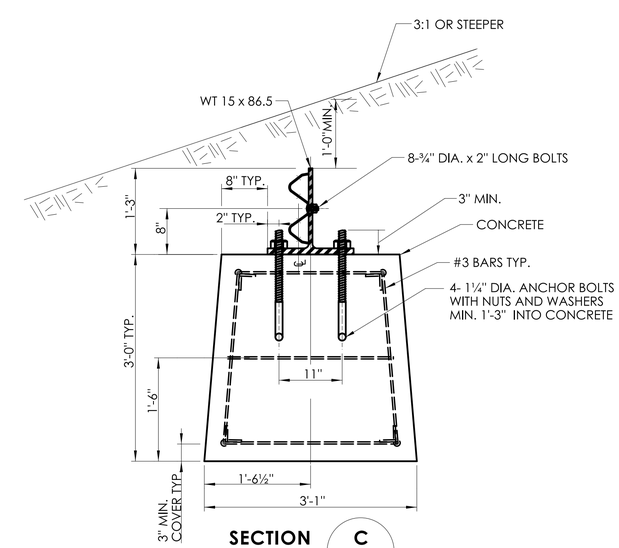

SECTION C -

DETAILS OF ANCHORAGE IN EARTH CUT SLOPE

	NOT TO SCALE	SIGNATURE BLOCK: OFFICE OF ENGINEERING 2800 BERLIN TURNPIKE NEWINGTON, CT 06111	SUBMITTED BY: Digitally signed by Leo Fontaine, P.E. Date: 2024.12.19 15:04:59-05'00'	APPROVED BY: Digitally signed by Michael N. Calabrese, P.E. Date: 2025.01.29 12:40:40-05'00'	CTDOT CONNECTICUT DEPARTMENT OF TRANSPORTATION	CTDOT STANDARD SHEET	STANDARD SHEET TITLE: ANCHOR IN EARTH CUT SLOPE ANCHOR IN ROCK CUT SLOPE	STANDARD SHEET NO.: HW-911_03

PLOTTED DATE: 10/23/2024