GENERAL NOTES:

1. NO WASHERS ARE USED ON THE ⅝" DIA. BUTTON HEAD BOLTS CONNECTING THE RAIL TO THE CONTROLLED RELEASING TERMINAL (CRT) POSTS.
2. THE RAIL IS NOT BOLTED TO THE CRT POST AT THE CENTER OF THE NOSE AS SHOWN FOR THE 8'-6" RADIUS CURVED GUIDERAIL TREATMENT ONLY.
3. THE CURVED GUIDERAIL SECTION SHALL BE SHOP BENT.
4. THE SLOPE FROM THE EDGE OF THE SHOULDER TO THE FACE OF THE RAIL SHALL BE 10:1 OR FLATTER. NO CURBING SHALL BE INSTALLED WITHIN THE PAY LIMIT OF THE CURVED GUIDERAIL TREATMENT.
5. THIS SYSTEM SHALL BE USED ONLY ON ROADS WITH DESIGN SPEEDS ≤ 50 mph.
6. MAINTAIN MINIMUM 27¾" RAIL HEIGHT THROUGH RADIUS.

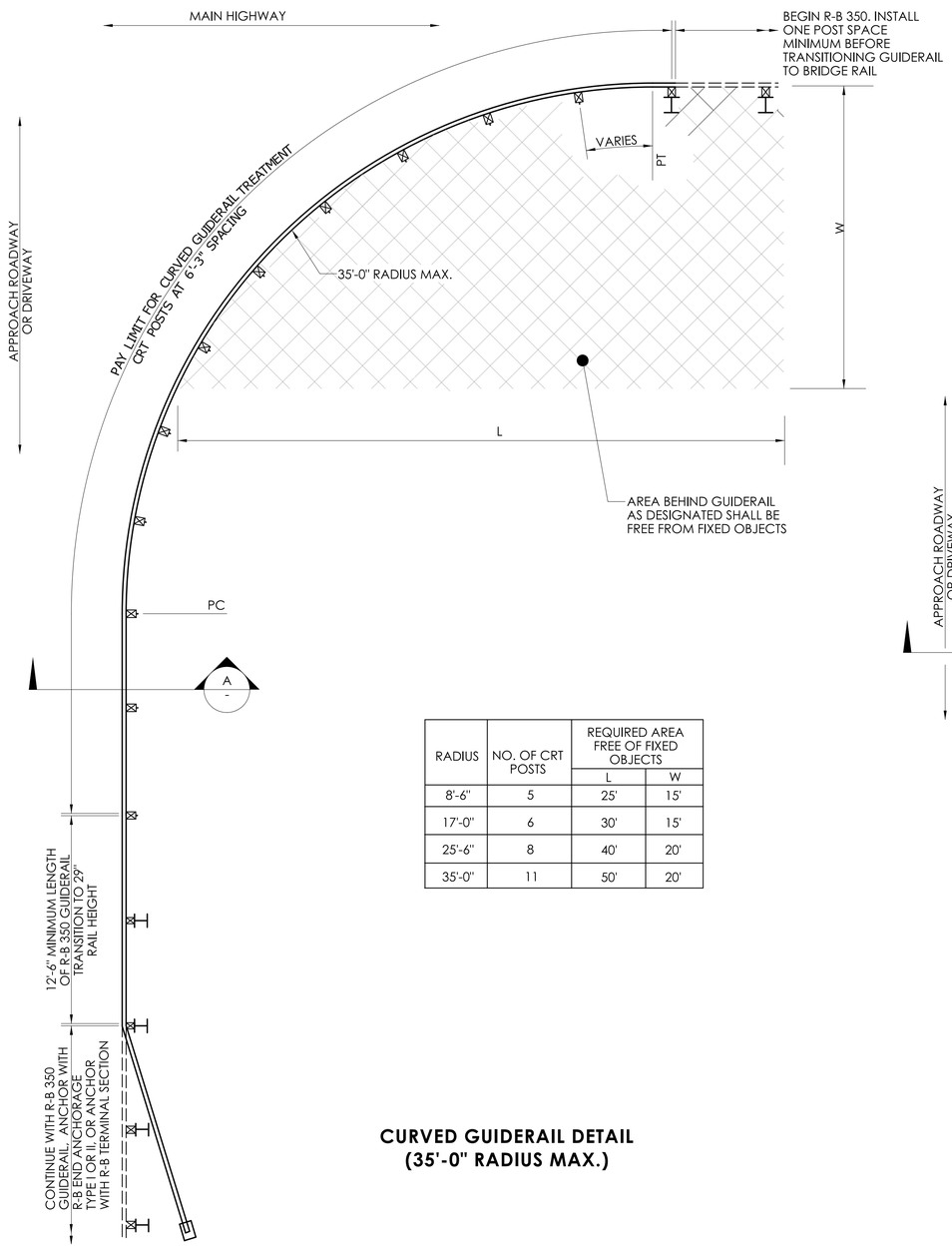

RADIUS	NO. OF CRT POSTS	REQUIRED AREA FREE OF FIXED OBJECTS	
		L	W
8'-6"	5	25'	15'
17'-0"	6	30'	15'
25'-6"	8	40'	20'
35'-0"	11	50'	20'

CURVED GUIDERAIL DETAIL (35'-0" RADIUS MAX.)

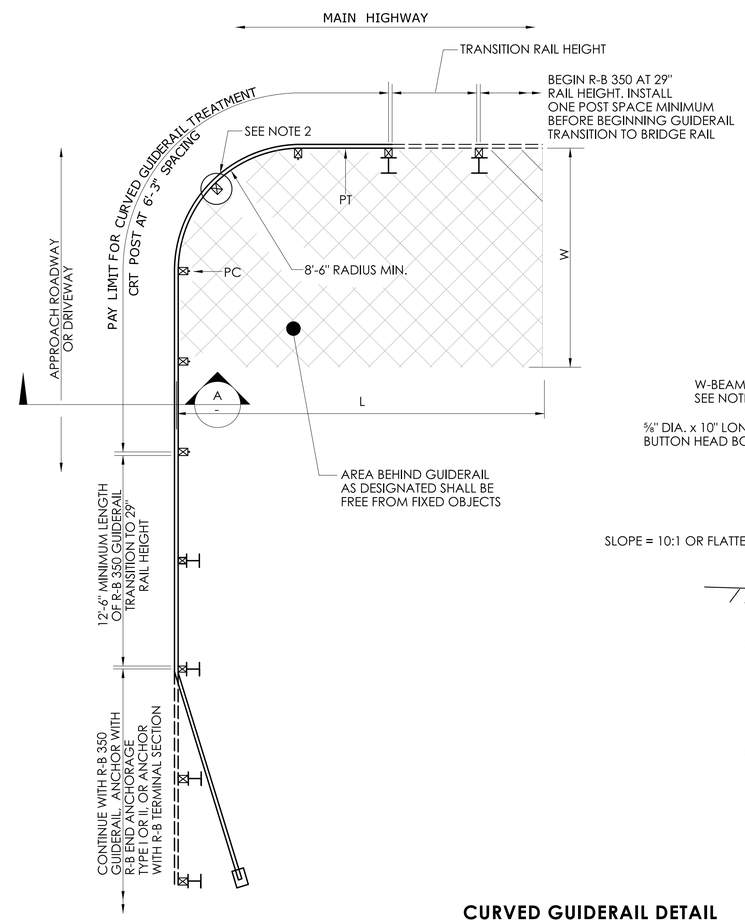

CURVED GUIDERAIL DETAIL (8'-6" RADIUS MIN.)

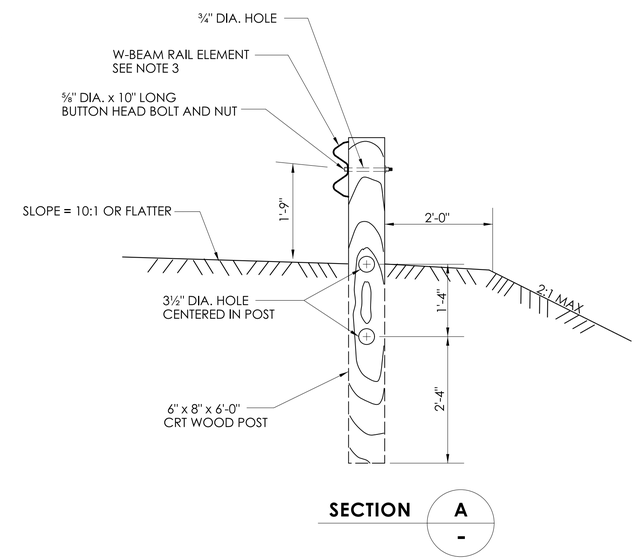

	NOT TO SCALE	SIGNATURE BLOCK: OFFICE OF ENGINEERING 2800 BERLIN TURNPIKE NEWINGTON, CT 06111	SUBMITTED BY: Digitally signed by Leo Fontaine, P.E. Date: 2024.12.17 15:17:05-05'00'	APPROVED BY: Digitally signed by Michael N. Calabrese, P.E. Date: 2025.01.29 12:15:38-05'00'	CTDOT CONNECTICUT DEPARTMENT OF TRANSPORTATION	CTDOT STANDARD SHEET	STANDARD SHEET TITLE: CURVED GUIDERAIL TREATMENT	STANDARD SHEET NO.: HW-910_11

PLOTTED DATE: 10/22/2024