TYPICAL METAL SIGN POSTS

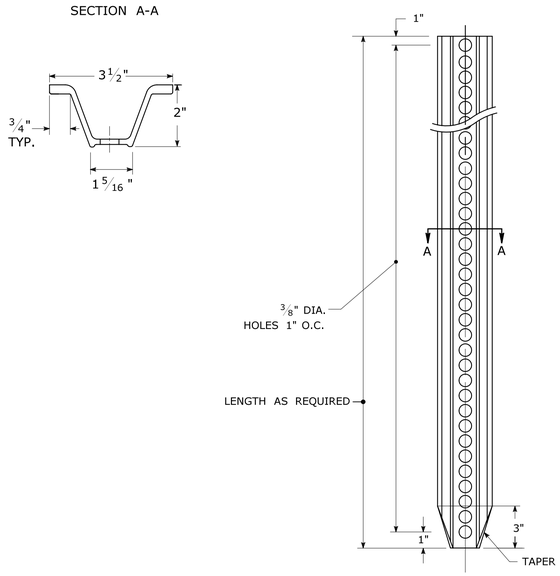

TYPICAL SIGN PANEL ATTACHMENT

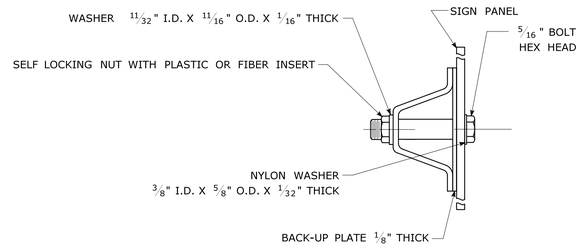

TYPICAL BACK TO BACK SIGN PANEL ATTACHMENT

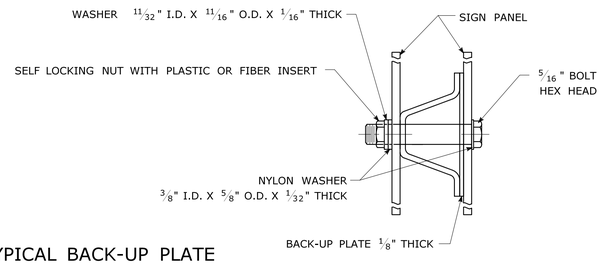

TYPICAL BACK-UP PLATE

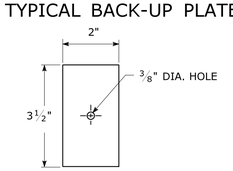

BOLTS - STAINLESS STEEL CONFORMING TO ASTM F593, ALLOY GROUP 1 OR 2 (ALLOY TYPES 304 OR 316).
SELF LOCKING NUTS - STAINLESS STEEL CONFORMING TO ASTM F594, ALLOY GROUP 1 OR 2 (ALLOY TYPES 304 OR 316).
WASHERS - STAINLESS STEEL CONFORMING TO ASTM A240, (ALLOY TYPES 304 OR 316).

METAL DELINEATOR POST

WT./FT. = 1.12 LBS./FT. MIN.

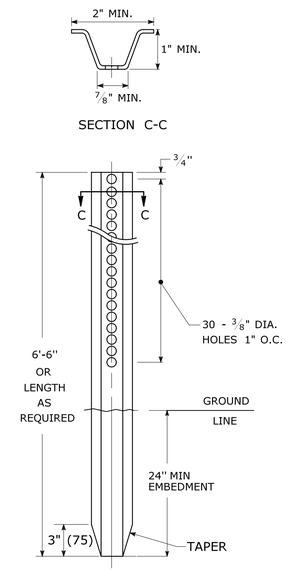

GENERAL NOTES:

1. STEEL FOR DELINEATOR POSTS SHALL BE ASTM A36 STEEL. STEEL FOR ALL OTHER POSTS SHALL CONFORM TO THE MECHANICAL REQUIREMENTS OF ASTM A 499 GRADE 80 AND TO THE CHEMICAL REQUIREMENTS OF ASTM A1 CARBON STEEL TEE RAIL HAVING NOMINAL WEIGHT (MASS) OF 91 LBS. OR GREATER PER LINEAR YARD.
2. AFTER FABRICATION, ALL STEEL POSTS, STRAPS AND PLATES SHALL BE GALVANIZED TO MEET THE REQUIREMENTS OF ASTM A123.
3. WASHERS FOR BREAKAWAY INSTALLATIONS SHALL MEET ASTM F436, TYPE 1.
4. SPACER BAR FOR BREAKAWAY INSTALLATION SHALL CONFORM TO THE MECHANICAL REQUIREMENTS OF ASTM A36.
5. ALL BOLTS, NUTS, AND WASHERS FOR BREAKAWAY INSTALLATIONS SHALL BE GALVANIZED TO MEET THE REQUIREMENTS OF ASTM A153.
6. ALL SIGN POSTS SHALL HAVE BREAKAWAY FEATURES THAT MEET AASHTO REQUIREMENTS CONTAINED IN THE CURRENT "STANDARD SPECIFICATIONS FOR STRUCTURAL SUPPORTS FOR HIGHWAY SIGNS, LUMINAIRES AND TRAFFIC SIGNALS." THE BREAKAWAY FEATURES SHALL BE STRUCTURALLY ADEQUATE TO CARRY THE SIGNS SHOWN IN THE PLANS AT 60 mph WIND LOADINGS. INSTALLATIONS SHALL BE IN ACCORDANCE WITH MANUFACTURERS RECOMMENDATIONS.
7. SIGN POSTS SHALL BE 4 LBS./FT.

BREAKAWAY INSTALLATION

FOR 4 LBS./FT. POSTS

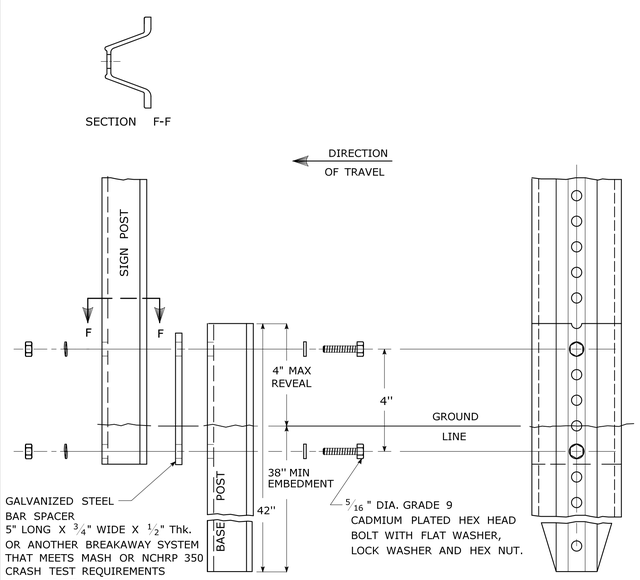

TYPICAL SIGN POST INSTALLATION IN LEDGE

LEDGE SHALL BE REMOVED TO DRIVE THE BASE POST TO A DEPTH OF 38".

HOLE SHALL BE FILLED WITH SUB-BASE MATERIAL AND COMPACTED WITH A TAMPING BAR, OR TECHNIQUE APPROVED BY THE ENGINEER, PRIOR TO BASE POST INSTALLATION.

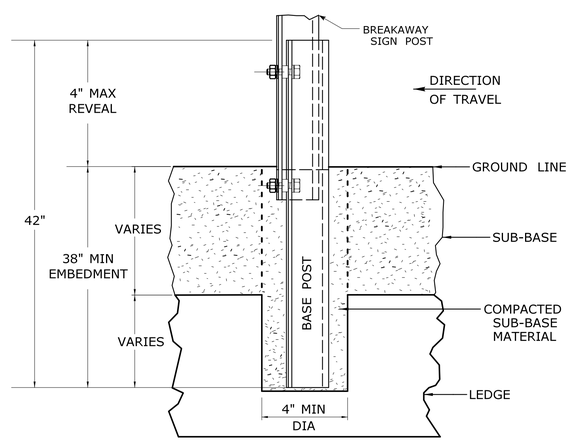

TYPICAL SLEEVE FOR PAVED AREAS

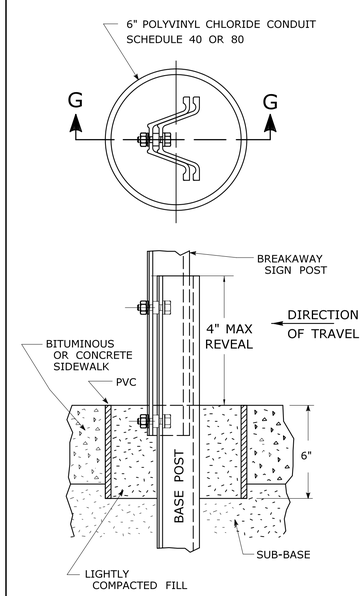

45° MOUNTING BRACKET FOR INSTALLATION OF PARKING SIGNS

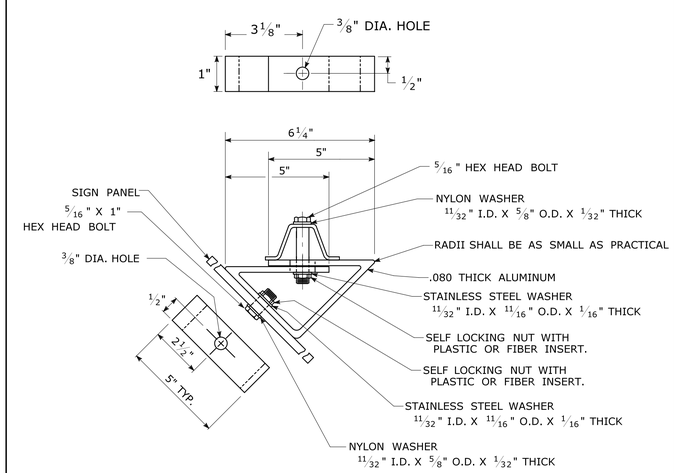

REV.	DATE	REVISION DESCRIPTION
2	6-2017	SIGN POST REVISIONS.
1	2-2011	MINOR REVISIONS.

THE INFORMATION, INCLUDING ESTIMATED QUANTITIES OF WORK, SHOWN ON THESE SHEETS IS BASED ON LIMITED INVESTIGATIONS BY THE STATE AND IS IN NO WAY WARRANTED TO INDICATE THE CONDITIONS OF ACTUAL QUANTITIES OF WORK WHICH WILL BE REQUIRED.

Plotted Date: 6/6/2017

NOT TO SCALE

STATE OF CONNECTICUT
DEPARTMENT OF TRANSPORTATION

Filename: TR-1208_02_May_2017_Revision.dgn Model: TR-1208_02

SUBMITTED BY: NAME/DATE/TIME:
Mark F. Makuch, P.E. 2017.06.07 07:30:30-04'00'
Mary E. Baker, P.E. 2017.06.13 15:28:14-04'00'
APPROVED BY: NAME/DATE/TIME:
Gregory M. Dorosh, P.E. 2017.06.15 09:27:29-04'00'

CTDOT STANDARD SHEET

OFFICE OF ENGINEERING

STANDARD SHEET TITLE:

METAL SIGN POSTS AND SIGN MOUNTING DETAILS

GUIDE SHEET NO.: TR-1208_02