NOBADEER ATHLETIC FIELDS

IMPROVEMENTS

7 NOBADEER FARM ROAD, NANTUCKET, MASSACHUSETTS 02554

Know what's **below.**
Call before you dig.
www.cbyd.com

OWNER:
TOWN OF NANTUCKET

16 BROAD STREET
NANTUCKET, MASSACHUSETTS 02554

PREPARED FOR:
CHARLES POLACHI

PARKS & RECREATION MANAGER - NANTUCKET PUBLIC WORKS
188 MADAKET ROAD
NANTUCKET, MASSACHUSETTS 02554

DESIGN TEAM:

LANDSCAPE ARCHITECT/ENGINEER:
WESTON & SAMPSON ENGINEERS
1 WASHINGTON MALL, 10TH FLOOR
BOSTON, MASSACHUSETTS 02108

IRRIGATION CONSULTANT
IRRIGATION CONSULTING, INC.
20 MERRIT PARKWAY, 2ND FLOOR
NASHUA, NEW HAMPSHIRE 03062

SURVEYOR
BLACKWELL & ASSOCIATES, INC.
20 TEASDALE CIRCLE
NANTUCKET, MASSACHUSETTS 02554

- FOR ILLUSTRATIVE PURPOSES ONLY -

SHEET INDEX

L001	.....	GENERAL NOTES
L100	.....	EXISTING CONDITIONS
N/A	.....	STAMPED & SIGNED EXISTING CONDITIONS PLAN
L200	.....	SITE PREPARATION & DEMOLITION PLAN
L300	.....	LAYOUT & MATERIALS PLAN
L301	.....	LAYOUT & MATERIALS ENLARGEMENT
L302	.....	ROADWAY ALIGNMENT & SIGNAGE PLAN
L400	.....	GRADING PLAN
L401	.....	GRADING ENLARGEMENT
L402	.....	GRADING ENLARGEMENT
L500	.....	PLANTING PLAN
L501	.....	PLANT SCHEDULE
L600	.....	SHEET SERIES INTENTIONALLY LEFT BLANK
L700	.....	IRRIGATION PLAN BASE
L701	.....	IRRIGATION PLAN ALTERNATE #3
L702	.....	IRRIGATION DETAILS
L800-L805	.....	SITE DETAILS
E001	.....	ELECTRICAL ABBREVIATIONS, GENERAL NOTES & LEGENDS
E002	.....	ELECTRICAL SITE PLAN
E501	.....	ELECTRICAL DETAILS
E601	.....	ELECTRICAL ONE LINE AND SCHEDULES

ALTERNATES

ADD ALTERNATE #1: SCOREBOARDS
PROVIDE AND INSTALL TWO COMPLETE AND FULLY OPERATIONAL SCOREBOARD SYSTEMS, INCLUDING SCOREBOARD CABINETS, SUPPORT POSTS, MOUNTING HARDWARE, IDENTIFICATION PANELS AND GRAPHICS, CONTROLLERS, RECEIVERS, ACCESSORIES, FOUNDATIONS/FOOTINGS, TESTING, COMMISSIONING, AND OWNER TRAINING. ELECTRICAL CONDUIT, BRANCH WIRING, AND RELATED INFRASTRUCTURE SPECIFICALLY INDICATED AS BASE BID WORK SHALL BE INCLUDED UNDER THE BASE BID. COORDINATE FINAL SCOREBOARD LOCATIONS, FOOTING REQUIREMENTS, ELECTRICAL CONNECTION POINTS, AND EQUIPMENT REQUIREMENTS WITH THE CONTRACT DOCUMENTS AND MANUFACTURER'S REQUIREMENTS.

ADD ALTERNATE #2: SEWER RUN
PROVIDE AND INSTALL THE FUTURE SEWER EXTENSION AS SHOWN ON THE PLANS. WORK SHALL INCLUDE THE FULL LENGTH OF SEWER PIPE, INCLUDING THE PORTION LOCATED BENEATH THE ROADWAY, WITH WATERTIGHT CAPS/PLUGS AT EACH DEAD-END TERMINUS TO ALLOW FOR FUTURE CONNECTION. INCLUDE TRENCHING, BEDDING, BACKFILL, COMPACTION, PAVEMENT RESTORATION WHERE APPLICABLE, AND ALL RELATED WORK REQUIRED FOR A COMPLETE INSTALLATION. FINAL CONNECTION TO THE SEWER SYSTEM IS NOT INCLUDED IN THIS ALTERNATE AND SHALL BE COMPLETED UNDER A FUTURE PHASE.

ADD ALTERNATE #3: NON-FIELD IRRIGATION
PROVIDE AND INSTALL ALL IRRIGATION WORK LOCATED OUTSIDE OF THE NEW SPORTS FIELD LIMITS, AS SHOWN ON THE DRAWINGS. WORK SHALL INCLUDE ALL ASSOCIATED PIPING, HEADS, VALVES, CONTROLS, WIRING, TRENCHING, BACKFILL, AND RELATED WORK REQUIRED TO PROVIDE A COMPLETE AND FULLY FUNCTIONAL IRRIGATION SYSTEM FOR THE NON-FIELD IRRIGATION AREAS. IRRIGATION WITHIN THE NEW SPORTS FIELD LIMITS, INCLUDING ASSOCIATED INFRASTRUCTURE SPECIFICALLY INDICATED AS BASE BID WORK, SHALL BE INCLUDED UNDER THE BASE BID. INCLUDE ALL CONNECTIONS AND MODIFICATIONS TO THE BASE BID IRRIGATION SYSTEM REQUIRED TO ACCOMMODATE THE ADDITIONAL IRRIGATION WORK.

ADD ALTERNATE #4: SPORTS LIGHTING
PROVIDE AND INSTALL A COMPLETE AND FULLY OPERATIONAL SPORTS LIGHTING SYSTEM, INCLUDING POLES, LUMINAIRES, CROSSARMS, MANUFACTURER-SUPPLIED CONTROL AND MONITORING EQUIPMENT, FOUNDATIONS/FOOTINGS, GROUNDING, SURGE PROTECTION, FIXTURE AIMING, TESTING, COMMISSIONING, OWNER TRAINING, WARRANTIES, AND REQUIRED DARKSKY APPROVALS. ELECTRICAL CONDUIT, BRANCH WIRING, AND RELATED INFRASTRUCTURE SPECIFICALLY INDICATED AS BASE BID WORK SHALL BE INCLUDED UNDER THE BASE BID. COORDINATE FINAL POLE LOCATIONS, FOOTING REQUIREMENTS, FIXTURE AIMING, ELECTRICAL CONNECTION POINTS, AND SYSTEM REQUIREMENTS WITH THE CONTRACT DOCUMENTS AND MANUFACTURER'S REQUIREMENTS.

LOCUS MAP
NOT TO SCALE

RE-BID DOCUMENTS
AUGUST 7, 2026

BID NO: 2026-PR-0720

Prepared By

Weston & Sampson Engineers, Inc.
1 Washington Mall, 10th Floor
Boston, MA 02108
978.532.1900 800.SAMPSON
www.westonandsampson.com

COPYRIGHT 2026 WESTON & SAMPSON

GENERAL NOTES

1. PROPERTY LINES, SITE SURVEY AND TOPOGRAPHICAL INFORMATION BASED ON THE GROUND SURVEY PERFORMED BY BLACKWELL & ASSOCIATES INC. PROFESSIONAL LAND SURVEYORS & CIVIL ENGINEERS, 20 TEASDALE CIRCLE, NANTUCKET, MA, 02554. PHONE: 508-228-9026 EXT. 12, LEO@BLACKWELLSURVEY.COM, JUNE 8, 2025, AMENDED ON DECEMBER 16, 2025.
2. THE SURVEY INFORMATION SHOWN HEREON WAS PROVIDED BY OTHERS AND IS ASSUMED TO BE CORRECT. THE DESIGN IS BASED ON THIS INFORMATION. ANY DISCREPANCIES IN HORIZONTAL OR VERTICAL CONTROL, INCLUDING GEOLOCATION, SHALL BE REPORTED TO THE ENGINEER/LANDSCAPE ARCHITECT PRIOR TO COMMENCEMENT OF CONSTRUCTION. NO WORK SHALL PROCEED UNTIL DISCREPANCIES ARE RESOLVED.
3. ALL BIDDERS ARE REQUIRED TO INSPECT THE PROJECT SITE IN ITS ENTIRETY PRIOR TO SUBMITTING THEIR BID, AND BECOME FAMILIAR WITH ALL CONDITIONS AS THEY MAY AFFECT THEIR BID. CONTRACTOR AND SUB-CONTRACTOR SHALL BE FAMILIAR WITH ALL DRAWINGS AND SPECIFICATIONS PRIOR TO COMMENCING THE CONSTRUCTION.
4. LOCATIONS OF ANY UTILITIES SHOWN ON THESE PLANS ARE APPROXIMATE ONLY. CONTRACTOR SHALL BE RESPONSIBLE FOR VERIFYING THE LOCATION OF SUCH UTILITIES, PROTECTING ALL EXISTING UTILITIES AND REPAIRING ANY DAMAGE DONE DURING CONSTRUCTION. THE CONTRACTOR SHALL BE RESPONSIBLE FOR ALL ON-SITE COORDINATION WITH UTILITY COMPANIES AND PUBLIC AGENCIES AND FOR OBTAINING ALL REQUIRED PERMITS AND PAYING ALL REQUIRED FEES. IN ACCORDANCE WITH M.G.L. CHAPTER 82, SECTION 40, INCLUDING AMENDMENTS, CONTRACTORS SHALL NOTIFY ALL UTILITY COMPANIES AND GOVERNMENT AGENCIES IN WRITING PRIOR TO EXCAVATION. CONTRACTOR SHALL ALSO CALL MASSACHUSETTS DIG SAFE (811) AT (888) 344-7233 NO LESS THAN 72 HOURS (EXCLUSIVE OF WEEKENDS AND HOLIDAYS) PRIOR TO SUCH EXCAVATION, IN ACCORDANCE WITH M.G.L. CHAPTER 82, SECTION 40 AND ALL APPLICABLE AMENDMENTS. DOCUMENTATION OF REQUESTS SHALL BE PROVIDED TO PROJECT REPRESENTATIVE PRIOR TO EXCAVATION WORK.
5. WHERE AN EXISTING UTILITY IS FOUND TO CONFLICT WITH THE PROPOSED WORK, THE LOCATION, ELEVATION AND SIZE OF THE UTILITY SHALL BE ACCURATELY DETERMINED WITHOUT DELAY BY THE CONTRACTOR AND THE INFORMATION FURNISHED TO THE OWNER'S REPRESENTATIVE FOR RESOLUTION OF THE CONFLICT.
6. THE CONTRACTOR SHALL MAKE ALL ARRANGEMENTS FOR THE ALTERATION AND ADJUSTMENT OF SANITARY SEWER, SEPTIC, COMMUNICATIONS, WATER, GAS, ELECTRIC, TELEPHONE AND ANY OTHER PRIVATE UTILITIES BY THE UTILITY OWNER AT NO ADDITIONAL COST TO THE TOWN OF NANTUCKET.
7. CONTRACTOR SHALL BE RESPONSIBLE FOR REVIEWING ALL DRAWINGS AND SPECIFICATIONS TO DETERMINE THE EXTENT OF EXCAVATION AND DEMOLITION REQUIRED TO RECEIVE SITE IMPROVEMENTS.
8. ANY DISCREPANCIES OR CONFLICTS BETWEEN THE DRAWINGS AND EXISTING CONDITIONS, EXISTING CONDITIONS TO REMAIN, TEMPORARY CONSTRUCTION, PERMANENT CONSTRUCTION AND WORK OF ADJACENT CONTRACTS SHALL BE BROUGHT TO THE ATTENTION OF THE OWNER BEFORE PROCEEDING. ITEMS ENCOUNTERED IN AREAS OF EXCAVATION THAT ARE NOT INDICATED ON THE DRAWINGS, BUT ARE VISIBLE ON SURFACE, SHALL BE THE CONTRACTOR'S RESPONSIBILITY AND SHALL BE REMOVED AT NO ADDITIONAL COST TO THE OWNER.
9. ANY ALTERATIONS TO THESE DRAWINGS MADE IN THE FIELD DURING CONSTRUCTION SHALL BE RECORDED BY THE GENERAL CONTRACTOR ON "AS-BUILT" DRAWINGS.
10. ALL AREAS DISTURBED BY THE CONTRACTOR'S OPERATIONS OUTSIDE THE PROJECT LIMITS, SHALL BE RESTORED TO THE ORIGINAL CONDITION BY THE CONTRACTOR AT NO ADDITIONAL COST AND TO THE SATISFACTION OF THE OWNER.
11. EXISTING ITEMS SHOWN ON THE PLANS ARE IDENTIFIED AS 'EXISTING' OR 'EX.' ALL OTHER ITEMS SHALL BE CONSIDERED PART OF THE WORK, UNLESS OTHERWISE NOTED.
12. ALL KNOWN EXISTING STATE, COUNTY AND TOWN LOCATION LINES AND PRIVATE PROPERTY LINES HAVE BEEN ESTABLISHED FROM AVAILABLE INFORMATION AND ARE INDICATED ON THE PLANS.
13. THE CONTRACTOR SHALL TAKE ALL NECESSARY PRECAUTIONS TO PROTECT HIS EMPLOYEES, AS WELL AS PUBLIC USERS FROM INJURY DURING THE ENTIRE CONSTRUCTION PERIOD USING ALL NECESSARY SAFEGUARDS, INCLUDING BUT NOT LIMITED TO, THE ERECTION OF TEMPORARY WALKS, STRUCTURES, PROTECTIVE BARRIERS, COVERING, OR FENCES AS NEEDED.
14. CONTRACTOR SHALL COORDINATE ALL WORK ADJACENT TO ACTIVE OR OCCUPIED FACILITIES WITH THE OWNER AND SHALL MAINTAIN SAFE ACCESS FOR THE PUBLIC AT ALL TIMES.
15. THE CONTRACTOR SHALL SUPPLY THE OWNER WITH THE NAME OF THE OSHA "COMPETENT PERSON" PRIOR TO CONSTRUCTION.
16. FILLING OF EXCAVATED AREAS SHALL NOT TAKE PLACE WITHOUT THE PRESENCE OR PERMISSION OF THE OWNER.
17. EXISTING TREES TO REMAIN SHALL BE PROTECTED FROM CONSTRUCTION ACTIVITIES. NO STOCKPILING OF MATERIAL, EQUIPMENT OR VEHICULAR TRAFFIC SHALL BE ALLOWED WITHIN THE DRIP LINE OF TREES TO REMAIN. NO GUYS SHALL BE ATTACHED TO ANY TREE TO REMAIN. WHEN NECESSARY OR AS DIRECTED BY THE ENGINEER, THE CONTRACTOR SHALL ERECT TEMPORARY BARRIERS FOR THE PROTECTION OF EXISTING TREES DURING CONSTRUCTION.
18. TREES AND SHRUBS WITHIN THE LIMITS OF WORK SHALL BE REMOVED ONLY UPON THE APPROVAL OF THE OWNER REPRESENTATIVE OR AS NOTED ON THE PLANS.
19. NO FILLING SHALL OCCUR AROUND EXISTING TREES TO REMAIN WITHOUT THE APPROVAL OF THE OWNER OR OWNER REPRESENTATIVE.
20. THE CONTRACTOR SHALL REMOVE ALL SURFACE VEGETATION PRIOR TO GRADING THE SITE. TREES AND STUMPS SHALL BE REMOVED AND DISPOSED COMPLETE BY CONTRACTOR. TEMPORARY EROSION CONTROL MEASURES SHOWN ON THE DRAWINGS (INCLUDING SILT FENCE, STRAW WATTLES, OR SILT SOCKS) SHALL BE INSTALLED BY THE CONTRACTOR. THE CONTRACTOR SHALL BE RESPONSIBLE FOR MAINTAINING THESE TEMPORARY EROSION CONTROL MEASURES THROUGHOUT THE PROJECT WHICH COST SHALL BE INCIDENTAL TO THE PROJECT.
21. ALL UNSUITABLE UNCONTAMINATED EXCESS SOIL FROM CONSTRUCTION ACTIVITIES SHALL BE DISPOSED OF BY THE CONTRACTOR AT NO ADDITIONAL COST TO THE TOWN. REMOVAL ACTIVITIES SHALL BE IN ACCORDANCE WITH STATE AND LOCAL REGULATIONS AT NO ADDITIONAL COST TO THE TOWN. SUITABLE SOIL EXCAVATION AS PART OF THE PROJECT MUST MEET ONE OR MORE OF THE MATERIAL REQUIREMENTS SPECIFIED. ON-SITE FILL MATERIALS, WHICH DO NOT CONFORM TO THE SPECIFICATIONS, SHALL NOT BE USED BELOW ANY STRUCTURES. IF THE CONTRACTOR PROPOSES TO USE THE EXISTING FILL ON SITE BELOW PAVEMENT AREAS, THE CONTRACTOR MUST DEMONSTRATE THAT THE FILL MEETS THE REQUIREMENTS PER THE SPECIFICATIONS. ALL EXCAVATED FILL MATERIAL WHICH DOES NOT MEET THE REQUIREMENTS OF THE CONTRACT DOCUMENTS SHALL BE REMOVED AND DISPOSED OF OFF-SITE AT NO ADDITIONAL COST.
22. CONTRACTOR IS RESPONSIBLE FOR STAKING CONSTRUCTION BASELINES IN FIELD WITH A MASSACHUSETTS REGISTERED PROFESSIONAL LAND SURVEYOR. NO CONSTRUCTION WILL BE PERFORMED WITHOUT THE PROPOSED BASELINES AND LAYOUTS APPROVED BY THE OWNER REPRESENTATIVE .
23. NO FILL SHALL CONTAIN HAZARDOUS MATERIALS.
24. CONTRACTOR SHALL PROVIDE TEMPORARY FENCING AROUND PERIMETER OF WORK AREA (LIMIT OF WORK). FENCE SHALL NOT IMPEDE TRAVEL WAYS.
25. ANY QUANTITIES SHOWN ON PLANS ARE FOR COMPARATIVE BIDDING PURPOSES ONLY. IT IS THE CONTRACTOR'S RESPONSIBILITY TO VISIT THE PROJECT SITE TO VERIFY ALL QUANTITIES AND CONDITIONS PRIOR TO SUBMITTING BID.
26. ALL EXISTING DRAINAGE FACILITIES TO REMAIN SHALL BE MAINTAINED FREE OF DEBRIS, SOIL, SEDIMENT, AND FOREIGN MATERIAL AND OPERATIONAL THROUGHOUT THE LIFE OF THE CONTRACT. REMOVE ALL SOIL, SEDIMENT, DEBRIS AND FOREIGN MATERIAL FROM ALL DRAINAGE STRUCTURES, INCLUDING BUT NOT LIMITED TO, DRAINAGE INLETS, MANHOLES AND CATCH BASINS WITHIN THE LIMIT OF WORK AND DRAINAGE STRUCTURES OUTSIDE THE LIMIT OF WORK THAT ARE IMPACTED BY THE WORK FOR THE ENTIRE DURATION OF CONSTRUCTION.
27. CONTRACTOR'S STAGING AREA MUST BE WITHIN THE CONTRACT LIMIT LINE AND IN AREAS APPROVED BY OWNER. ANY OTHER AREAS THAT THE CONTRACTOR MAY WISH TO USE FOR STAGING MUST BE COORDINATED WITH THE OWNER.
28. THE CONTRACTOR SHALL KEEP ALL STREETS, PARKING LOTS AND WALKS THAT ARE NOT RESTRICTED FROM PUBLIC USE DURING CONSTRUCTION BROOM CLEAN AT ALL TIMES. THE CONTRACTOR SHALL USE ACCEPTABLE METHODS AND MATERIALS TO MAINTAIN ADEQUATE DUST CONTROL THROUGHOUT CONSTRUCTION.
29. CONTRACTOR SHALL COORDINATE ALL WORK WITH THE OWNER.
30. CONTRACTOR SHALL DEWATER AS NECESSARY TO PERFORM THE PROPOSED WORK.
31. THE LIMIT OF WORK SHALL BE DELINEATED IN THE FIELD PRIOR TO THE START OF SITE CLEARING OR CONSTRUCTION AND AGREED UPON WITH THE LANDSCAPE ARCHITECT.
32. DEEP SUMP CATCH BASINS AND STORMWATER BASINS SHALL BE CLEANED FOLLOWING CONSTRUCTION AND SHALL FOLLOW THE OPERATION AND MAINTENANCE PLAN THEREAFTER.
33. HAULING OF EARTH MATERIALS TO AND FROM THE SITE SHALL BE RESTRICTED TO THE HOURS OF 7:30 AM TO 5 PM.
34. CONTRACTOR SHALL COMPLY WITH ALL TOWN OF NANTUCKET SEASONAL AND SUMMER CONSTRUCTION RESTRICTIONS, INCLUDING ANY LIMITATIONS ON HOURS, DAYS, OR ACTIVITIES, WHETHER OR NOT EXPLICITLY SHOWN ON THE PLANS OR SPECIFICATIONS.
35. ANY BOULDERS 3 CY OR SMALLER SHALL BE CONSIDERED UNDOCUMENTED FILL AND SHALL BE DISPOSED OF AT NO ADDITIONAL COST TO THE TOWN.
36. WORK ON SATURDAYS SHALL ONLY BE CONDUCTED IF PRIOR WRITTEN PERMISSION IS PROVIDED BY THE TOWN.
37. NO TRUCKS LEFT IDLING ON TOWN STREETS DURING CONSTRUCTION. CONSTRUCTION TRAFFIC AT NO TIME SHALL IMPEDE FLOW OF RESIDENT TRAFFIC.
38. SOCCER FIELD LAYOUT AND STRIPING SHOWN FOR REFERENCE ONLY AND SHALL BE PROVIDED BY OWNER. SOCCER GOALS SHALL ALSO BE PROVIDED BY OWNER.

P:\MA\Nantucket MA\Nobadeer Fields\06-CAD\L001 GENERAL NOTES.dwg Almeida.Antone8/11/2026 7:47 AM

EROSION AND SEDIMENT CONTROL NOTES

1. ALL SEDIMENT AND EROSION CONTROL DEVICES SHALL BE PUT INTO PLACE PRIOR TO BEGINNING ANY CONSTRUCTION OR DEMOLITION. REFER TO PLANS FOR APPROXIMATE LOCATION OF EROSION AND SEDIMENT CONTROL. REFER TO SPECS AND DETAILS FOR TYPE OF EROSION AND SEDIMENT CONTROL.
2. THE CONTRACTOR SHALL BE RESPONSIBLE FOR THE CONTINUAL MAINTENANCE OF ALL CONTROL DEVICES THROUGHOUT THE DURATION OF THE PROJECT.
3. CONTRACTOR SHALL REPAIR, REPLACE, OR SUPPLEMENT FAILED OR INEFFECTIVE EROSION AND SEDIMENT CONTROL MEASURES IMMEDIATELY UPON DISCOVERY OR AS DIRECTED BY THE OWNER'S REPRESENTATIVE, AT NO ADDITIONAL COST TO THE OWNER.
4. CONTRACTOR SHALL INSPECT EROSION AND SEDIMENT CONTROL MEASURES FOLLOWING SIGNIFICANT RAIN EVENTS AND REPAIR OR REPLACE AS NECESSARY.
5. CONTRACTOR SHALL MEET ALL OF THE STATE OF MASSACHUSETTS D.E.P. AND THE TOWN OF NANTUCKET WETLAND ORDINANCE REGULATIONS FOR SEDIMENT AND EROSION CONTROL.
6. EXCAVATED MATERIAL STOCKPILED ON THE SITE SHALL BE SURROUNDED BY A RING OF UNBROKEN SEDIMENT AND EROSION CONTROL FENCE. THE LIMITS OF ALL GRADING AND DISTURBANCE SHALL BE KEPT TO A MINIMUM WITHIN THE APPROVED AREA OF CONSTRUCTION. ALL AREAS OUTSIDE OF THE LIMIT OF CONTRACT SHALL REMAIN TOTALLY UNDISTURBED UNLESS OTHERWISE APPROVED BY OWNER'S REPRESENTATIVE.
7. ALL CATCH BASINS AND DRAIN GRATES WITHIN LIMIT OF CONTRACT SHALL BE PROTECTED WITH SILT SACKS DURING THE ENTIRE DURATION OF CONSTRUCTION.
8. EROSION CONTROL BARRIERS TO BE INSTALLED AT THE TOE OF SLOPES. SEE GRADING & DRAINAGE PLANS, NOTES, DETAILS AND SPECIFICATIONS.
9. THE CONTRACTOR SHALL PROVIDE DUST CONTROL FOR CONSTRUCTION OPERATIONS AS APPROVED BY OWNER.
10. ALL POINTS OF CONSTRUCTION EGRESS OR INGRESS SHALL BE MAINTAINED TO PREVENT TRACKING OR FLOWING OF SEDIMENT ON TO PUBLIC/PRIVATE ROADS.

DEMOLITION & SITE PREPARATION NOTES

1. THE CONTRACTOR SHALL INCLUDE IN THE BID THE COST OF REMOVING ANY EXISTING SITE FEATURES AND APPURTENANCES NECESSARY TO ACCOMPLISH THE CONSTRUCTION OF THE PROPOSED SITE IMPROVEMENTS. THE CONTRACTOR SHALL ALSO INCLUDE IN THE BID THE COST NECESSARY TO RESTORE SUCH ITEMS IF THEY ARE SCHEDULED TO REMAIN AS PART OF THE FINAL SITE IMPROVEMENTS. REFER TO PLANS TO DETERMINE EXCAVATION, DEMOLITION AND TO DETERMINE THE LOCATION OF THE PROPOSED SITE IMPROVEMENTS.
2. THE OWNER RESERVES THE RIGHT TO REVIEW ALL MATERIALS DESIGNATED FOR REMOVAL AND TO RETAIN OWNERSHIP OF SUCH MATERIALS. IF THE OWNER RETAINS ANY MATERIAL THE CONTRACTOR SHALL MAKE ARRANGEMENTS WITH THE OWNER TO HAVE THOSE MATERIALS REMOVED OFF SITE AT NO ADDITIONAL COST.
3. UNLESS SPECIFICALLY NOTED TO BE REMOVED / SALVAGED (R&S), ALL SITE FEATURES CALLED FOR REMOVAL (REM) SHALL BE REMOVED WITH THEIR FOOTINGS, ATTACHMENTS, BASE MATERIAL, ETC, TRANSPORTED FROM THE SITE TO BE DISPOSED OF IN A LAWFUL MANNER AT AN ACCEPTABLE DISPOSAL SITE AND AT NO ADDITIONAL COST TO THE OWNER.
4. ALL EXISTING SITE FEATURES TO REMAIN SHALL BE PROTECTED THROUGHOUT THE CONSTRUCTION PERIOD. ANY FEATURES DAMAGED DURING CONSTRUCTION OPERATIONS SHALL BE REPAIRED OR REPLACED TO THE SATISFACTION OF THE OWNER'S REPRESENTATIVE AT NO ADDITIONAL COST.
5. DURING EARTHWORK OPERATIONS, CONTRACTOR SHALL TAKE CARE TO NOT DISTURB EXISTING MATERIALS TO REMAIN, OUTSIDE THE LIMITS OF EXCAVATION AND BACKFILL AND SHALL TAKE WHATEVER MEASURES NECESSARY, AT THE CONTRACTOR'S EXPENSE, TO PREVENT ANY EXCAVATED MATERIAL FROM COLLAPSING. ALL BACKFILL MATERIALS SHALL BE PLACED AND COMPACTED AS SPECIFIED TO THE SUBGRADE REQUIRED FOR THE INSTALLATION OF THE REMAINDER OF THE CONTRACT WORK.
6. IT SHALL BE THE CONTRACTOR'S OPTION, WITH CONCURRENCE OF THE OWNER, TO REUSE EXISTING GRAVEL IF IT MEETS THE REQUIREMENTS OF THE SPECIFICATIONS FOR GRAVEL BORROW.
7. 'STRIP AND REMOVE TURF' SHALL INCLUDE REMOVAL OF GRASS, SHRUBS, AND UNDERBRUSH, REMOVAL OF ROOTS, ROUGH GRADING, INSTALLATION OF LOAM (IF APPLICABLE), FINE GRADING, SEEDING AND TURF ESTABLISHMENT BY THE CONTRACTOR.
8. TREES DESIGNATED FOR REMOVAL SHALL BE TAGGED BY CONTRACTOR AND APPROVED BY OWNER'S REPRESENTATIVE PRIOR TO COMMENCEMENT OF CONSTRUCTION.
9. THE STORAGE OF MATERIALS AND EQUIPMENT WILL BE PERMITTED AT LOCATIONS DESIGNATED BY OWNER OR OWNER'S REPRESENTATIVE. PROTECTION OF STORED MATERIALS AND EQUIPMENT SHALL BE THE SOLE RESPONSIBILITY OF THE CONTRACTOR.
10. LOAM / TOP SOIL DESIGNATED FOR REUSE AS GENERAL FILL SHALL BE BLENDED WITH SUITABLE BORROW MATERIAL AS SPECIFIED.
11. THE CONTRACTOR SHALL PROTECT EXISTING TREES TO REMAIN, CONTRACTOR SHALL INSTALL TREE PROTECTION BARRIER AFTER CLEARING UNDERBRUSH AND TAKE DUE CARE TO PREVENT INJURY TO TREES DURING CLEARING OPERATIONS.

LAYOUT & MATERIALS NOTES

1. COORDINATE ALL LAYOUT ACTIVITIES WITH THE SCOPE OF WORK CALLED FOR BY DEMOLITION, GRADING AND UTILITIES OPERATIONS ENCOMPASSED BY THIS CONTRACT. SET, PROTECT AND REPLACE REFERENCE STAKES AS NECESSARY OR AS REQUIRED BY THE OWNER'S REPRESENTATIVE.
2. ALL WORK SHALL BE PERFORMED BY CONTRACTOR UNLESS SPECIFICALLY INDICATED THAT THE WORK WILL BE PERFORMED "BY OTHERS" OR "UNDER SEPARATE CONTRACT".
3. TO FACILITATE LAYOUT OF PROPOSED SITE FEATURES AND FACILITIES, LAYOUT INFORMATION FOR CERTAIN FUTURE WORK, WHICH IS NOT INCLUDED WITHIN THE SCOPE OF THIS CONTRACT HAS BEEN PROVIDED ON THE LAYOUT AND MATERIALS PLAN FOR INFORMATION ONLY. SOME ITEMS ARE "NOT IN CONTRACT" (NIC) AND SHOWN FOR REFERENCE ONLY.
4. THE LAYOUT OF SITE AMENITIES AND FENCES MUST BE APPROVED BY THE OWNER REPRESENTATIVE PRIOR TO INSTALLATION.
5. THE LAYOUT OF ALL NEW PATHWAYS / WALKWAYS AND THE GRADING OF ALL SLOPES AND CROSS SLOPES SHALL CONFORM TO THE RULES AND REGULATIONS FOR HANDICAP ACCESS CODE OF MASSACHUSETTS REGULATIONS TITLE 521, AND THE AMERICANS WITH DISABILITIES ACT (ADA), TITLE 3. THE CONTRACTOR SHALL NOTIFY THE OWNER IMMEDIATELY OF ANY DISCREPANCIES BETWEEN ACTUAL CONDITIONS AND THOSE REQUIRED.
6. ALL LAYOUT LINES, OFFSETS, OR REFERENCES TO LOCATING OBJECTS ARE EITHER PARALLEL OR PERPENDICULAR UNLESS OTHERWISE DESIGNATED WITH ANGLE OFFSETS NOTED.
7. ALL PROPOSED SITE FEATURES SHALL BE LAID OUT AND STAKED FOR REVIEW AND APPROVAL BY THE OWNER'S REPRESENTATIVE PRIOR TO COMMENCEMENT OF INSTALLATION. ANY REQUIRED ADJUSTMENTS TO THE LAYOUT SHALL BE UNDERTAKEN AS DIRECTED, AT NO ADDITIONAL COST TO THE OWNER. ALL LAYOUT SHALL BE PERFORMED BY A MASSACHUSETTS REGISTERED PROFESSIONAL LAND SURVEYOR.
8. ALL PROPOSED PAVEMENTS SHALL MEET THE LINE AND GRADE OF EXISTING ADJACENT PAVEMENT SURFACES. ALL BITUMINOUS CONCRETE / ASPHALT SHALL BE TREATED WITH AN RS-1 TACK COAT AT POINT OF CONNECTION. ALL PATHWAY WIDTHS SHALL BE AS NOTED ON THE LAYOUT AND MATERIALS PLAN.
9. THE CONTRACTOR SHALL VERIFY ALL DIMENSIONS AND GRADES ON THE GROUND AND REPORT ANY DISCREPANCIES IMMEDIATELY TO THE OWNER.
10. THE CONTRACTOR SHALL BE RESPONSIBLE FOR FIELD MEASUREMENT OF ALL PROPOSED FENCES AND GATES.
11. THE DEPTH OF LOAM BORROW FOR ALL PROPOSED LAWN AREAS SHALL BE 6" MINIMUM. ALL DISTURBED AREAS SHALL BE RESTORED WITH LOAM AND SEED UNLESS OTHERWISE NOTED
12. REFER TO DETAIL DRAWINGS FOR CONSTRUCTION DETAILS.
13. SURVEY CONTROL POINTS AND COORDINATES ARE INDICATED ON THE PLANS. IT IS THE RESPONSIBILITY OF THE CONTRACTOR TO PROTECT OR CREATE HIS OWN PROTECTED CONTROL POINTS FROM THIS INFORMATION. THE CONTRACTOR IS RESPONSIBLE FOR ENSURING ALL LAYOUT POINTS ARE CONSISTENT WITH CONTROL INFORMATION. RESETTING OF DAMAGED OR MISSING LAYOUT MARKERS AS NECESSARY IS AT NO ADDITIONAL COST TO THE OWNER.

GRADING, UTILITIES & DRAINAGE NOTES

1. ALL WORK RELATING TO INSTALLATION, RENOVATION OR MODIFICATION OF WATER, DRAINAGE AND/OR SEWER SERVICES SHALL BE PERFORMED IN ACCORDANCE WITH THE STANDARDS OF THE TOWN OF NANTUCKET DPW.
2. THE CONTRACTOR SHALL VERIFY ALL DIMENSIONS AND GRADES ON THE GROUND AND REPORT ANY DISCREPANCIES IMMEDIATELY TO THE OWNER.
3. ALL GRADING IS TO BE SMOOTH AND CONTINUOUS WHERE PROPOSED SURFACES MEET EXISTING SURFACES, ELIMINATE ROUGH SPOTS AND ABRUPT GRADE CHANGES AND MEET LINE AND GRADE OF EXISTING CONDITIONS WITH NEW IMPROVEMENTS.
4. CONTRACTOR SHALL MAINTAIN POSITIVE DRAINAGE (1.5% MINIMUM) AWAY FROM ALL BUILDING FOUNDATIONS AND STRUCTURES.
5. CONTRACTOR SHALL ENSURE ALL AREAS ARE PROPERLY PITCHED TO DRAIN, WITH NO SURFACE WATER PONDING OR PUDDLING.
6. MINIMUM CROSS SLOPE ON ALL WALKWAYS WILL BE 1.0% TO PROVIDE POSITIVE DRAINAGE. ANY DISCREPANCIES NOT ALLOWING THIS TO OCCUR SHALL BE REPORTED TO THE OWNER PRIOR TO CONTINUING WORK.
7. ALL UTILITY GRATES, COVERS OR OTHER SURFACE ELEMENTS INTENDED TO BE EXPOSED AT GRADE SHALL BE FLUSH WITH THE ADJACENT FINISHED GRADE AND ADJUSTED TO PROVIDE A SMOOTH TRANSITION AT ALL EDGES.
8. THE CONTRACTOR SHALL SET SUBGRADE ELEVATIONS TO ALLOW FOR POSITIVE DRAINAGE AND PROVIDE EROSION CONTROL DEVICES, STRUCTURES, MATERIALS AND CONSTRUCTION METHODS TO DIRECT SILT MIGRATION AWAY FROM DRAINAGE AND OTHER UTILITY SYSTEMS, PUBLIC/PRIVATE STREETS AND WORK AREAS. CLEAN BASINS REGULARLY AS NEEDED AND AT THE END OF THE PROJECT.
9. EXCAVATION REQUIRED WITHIN PROXIMITY OF KNOWN EXISTING UTILITY LINES SHALL BE DONE BY HAND. CONTRACTOR SHALL REPAIR ANY DAMAGE TO EXISTING UTILITY LINES OR STRUCTURES INCURRED DURING CONSTRUCTION OPERATIONS AT NO COST TO THE OWNER.
10. WHERE NEW EARTHWORK MEETS EXISTING GRADE CONTRACTOR SHALL BLEND NEW EARTHWORK SMOOTHLY INTO EXISTING, PROVIDING VERTICAL CURVES OR ROUNDS AT ALL TOP AND BOTTOM OF SLOPES.
11. WHERE A SPECIFIC LIMIT OF WORK LINE IS NOT OBVIOUS OR IMPLIED, BLEND GRADES TO EXISTING CONDITIONS WITHIN 5 FEET OF PROPOSED CONTOURS.
12. RESTORE ALL DISTURBED AREAS AND LIMITS OF ALL REMOVALS TO LOAM AND SEED (L&S) UNLESS OTHERWISE NOTED.
13. SEE EARTHWORK SECTION OF SPECIFICATIONS FOR SPECIFIC EXCAVATION AND FILLING PROCEDURES.

ABBREVIATIONS

GENERAL

ABAN	ABANDON
ADJ	ADJUST
B	BASELINE
BIT. CONC.	BITUMINOUS CONCRETE (ASPHALT)
B.M.	BENCH MARK
BVCL	BLACK VINYL CHAIN LINK
BVW	BORDERING VEGETATED WETLAND
BWLL	BROKEN WHITE LANE LINE
CEM. CONC.	CEMENT CONCRETE
CLF	CHAIN LINK FENCE
CTE	CONNECT TO EXISTING
E.C.	ELECTRICAL CONTRACTOR
EOP	EDGE OF PAVEMENT
EQ	EQUIPMENT
EXIST. (OR EX.)	EXISTING
FDN	FOUNDATION
FF	FINISHED FLOOR
F.L. (OR F)	FLOW LINE
G.C.	GENERAL CONTRACTOR
GRAN. CURB	GRANITE CURB
H.C.	HANDICAP
HMA	HOT MIX ASPHALT
LOW	LIMIT OF WORK
MB	MAIL BOX
M.H.B.	MASSACHUSETTS HIGHWAY BOUND
NIC	NOT IN CONTRACT
N.T.S.	NOT TO SCALE
P	PROPERTY LINE
P.C.	PLUMBING CONTRACTOR
PROP	PROPOSED
PROT	PROTECT
PVMT	PAVEMENT
P.W.W.	PAVED WATERWAY
RC	REINFORCED CONCRETE
REM	REMOVE
REMOD	REMODEL
RET	RETAIN
RL	ROOF LEADER
R.O.W.	RIGHT-OF-WAY
R&D	REMOVE AND DISPOSE
R&S	REMOVE AND SALVAGE
R,R&S	REMOVE, RELOCATE AND SALVAGE
SB	STONE BOUND
SB/DH	STONE BOUND/ DRILL HOLE
SWEL	SOLID WHITE EDGE LINE
SYEL	SOLID YELLOW EDGE LINE
T.	TEMPORARY
TYP.	TYPICAL
VIF	VERIFY IN FIELD
WCR	WHEELCHAIR RAMP

UTILITIES

ACCM PIPE	ASPHALT COATED CORRUGATED METAL PIPE
CB	CATCH BASIN
CBCI	CATCH BASIN W/ CURB INLET
CI	CURB INLET
C.IRON	CAST IRON
C.I.T.	CHANGE IN TYPE
CIP	CAST IRON PIPE
CMP	CORRUGATED METAL PIPE
CO	CLEANOUT
CU	CONNECTION UNKNOWN
DI	DRAIN INLET
DMH	DRAIN MANHOLE
DS	DOWN SPOUT
F&C	FRAME AND COVER
F&G	FRAME AND GRATE
GI	GUTTER INLET
GICI	GUTTER INLET W/ CURB INLET
GV	GATE VALVE
GW	GARAGE WASTE
HDPE	HIGH DENSITY POLYETHYLENE PIPE
HH	HANDHOLE
HYD	HYDRANT
INV. ELEV.	INVERT ELEVATION
LB	LEACHING BASIN
LC	LEACHING CHAMBER
LG	LEACHING GALLEY
LP	LIGHT POLE
OCS	OUTLET CONTROL STRUCTURE
OGT	OIL AND GRIT TRAP
OHW	OVERHEAD WIRE
PVC	POLYVINYL CHLORIDE
RCP	REINFORCED CONCRETE PIPE
SMH	SEWER MANHOLE
SWTU	STORM WATER TREATMENT UNIT
UP	UTILITY POLE
UPLP	UTILITY POLE WITH LIGHT
VC	VITRIFIED CLAY PIPE
WG	WATER GATE

ALIGNMENT/GRADING

BC	BOTTOM OF CURB
BW	BOTTOM OF WALL
CC	CENTER OF CURVE
ELEV	ELEVATION
H.P.	HIGH POINT
L.P.	LOW POINT
PC	POINT OF CURVATURE
PCC	POINT OF COMPOUND CURVATURE
PI	POINT OF INTERSECTION
PRC	POINT OF REVERSE CURVATURE
PT	POINT OF TANGENCY
PVC	POINT OF VERTICAL CURVATURE
PVI	POINT OF VERTICAL INTERSECTION
PVT	POINT OF VERTICAL TANGENCY
R	RADIUS OF CURVATURE
S.S.D.	STOPPING SIGHT DISTANCE
STA	STATION
TC	TOP OF CURB
TW	TOP OF WALL

Project:
TOWN OF NANTUCKET

NOBADEER ATHLETIC FIELDS IMPROVEMENTS

7 NOBADEER FARM ROAD

Weston & Sampson Engineers, Inc.
1 Washington Mall, 10th Floor
Boston, MA 02108
978.532.1900 800.SAMPSON
www.westonandsampson.com

Consultants:

Revisions:

No.	Date	Description

COA:

Seal:

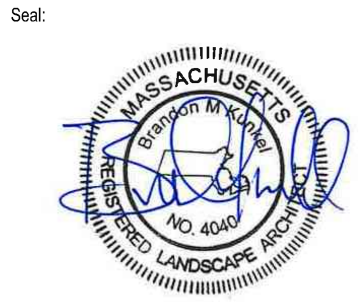

Issued For:
BID DOCUMENTS

Scale: AS NOTED

Date: AUGUST 7, 2026
Drawn By:
Reviewed By:
Approved By:

W&S Project No.: ENG24-1207
W&S File No.:

Drawing Title:
GENERAL NOTES

Sheet Number:
L001

COPYRIGHT © 2026 WESTON & SAMPSON, INC.

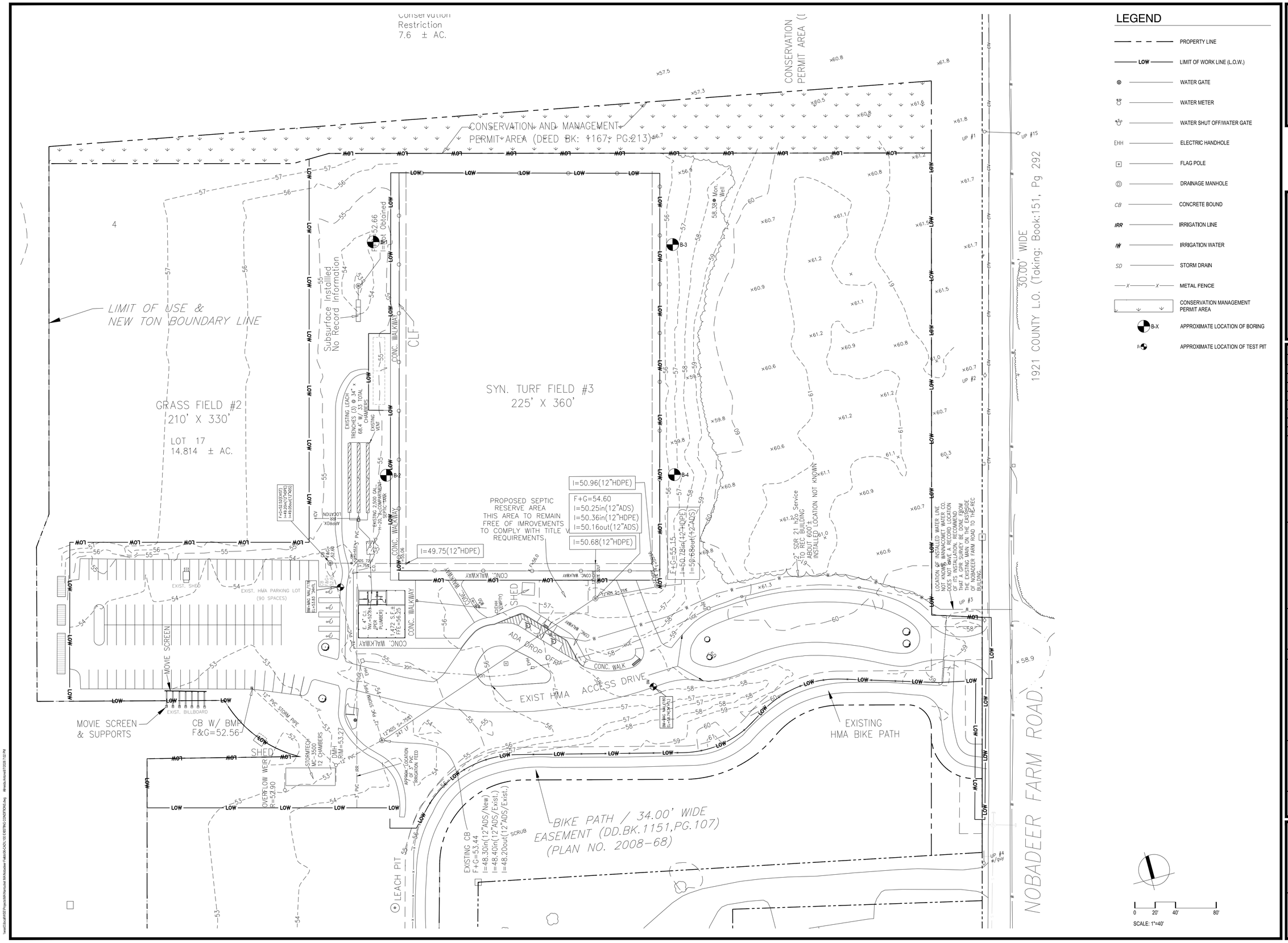

LEGEND

- PROPERTY LINE
- LOW — LIMIT OF WORK LINE (L.O.W.)
- WATER GATE
- WATER METER
- WATER SHUT OFF/WATER GATE
- EHH — ELECTRIC HANDHOLE
- FLAG POLE
- DRAINAGE MANHOLE
- CB — CONCRETE BOUND
- IRR — IRRIGATION LINE
- IW — IRRIGATION WATER
- SD — STORM DRAIN
- METAL FENCE
- CONSERVATION MANAGEMENT PERMIT AREA
- B-X — APPROXIMATE LOCATION OF BORING
- B-X — APPROXIMATE LOCATION OF TEST PIT

Project:
TOWN OF NANTUCKET

NOBADEER ATHLETIC FIELDS IMPROVEMENTS

7 NOBADEER FARM ROAD

Weston & Sampson

Weston & Sampson Engineers, Inc.
1 Washington Mall, 10th Floor
Boston, MA 02108
978.532.1900 800.SAMPSON
www.westonandsampson.com

Consultants:

Revisions:

No.	Date	Description

COA:

Seal:

MASSACHUSETTS REGISTRATION NO. 4040 REGISTERED LANDSCAPE ARCHITECT

Issued For:
BID DOCUMENTS

Scale: AS NOTED

Date: AUGUST 7, 2026
Drawn By:
Reviewed By:
Approved By:

W&S Project No.: ENG24-1207
W&S File No.:

Drawing Title:
EXISTING CONDITIONS

Sheet Number:
L100

COPYRIGHT © 2026 WESTON & SAMPSON, INC.

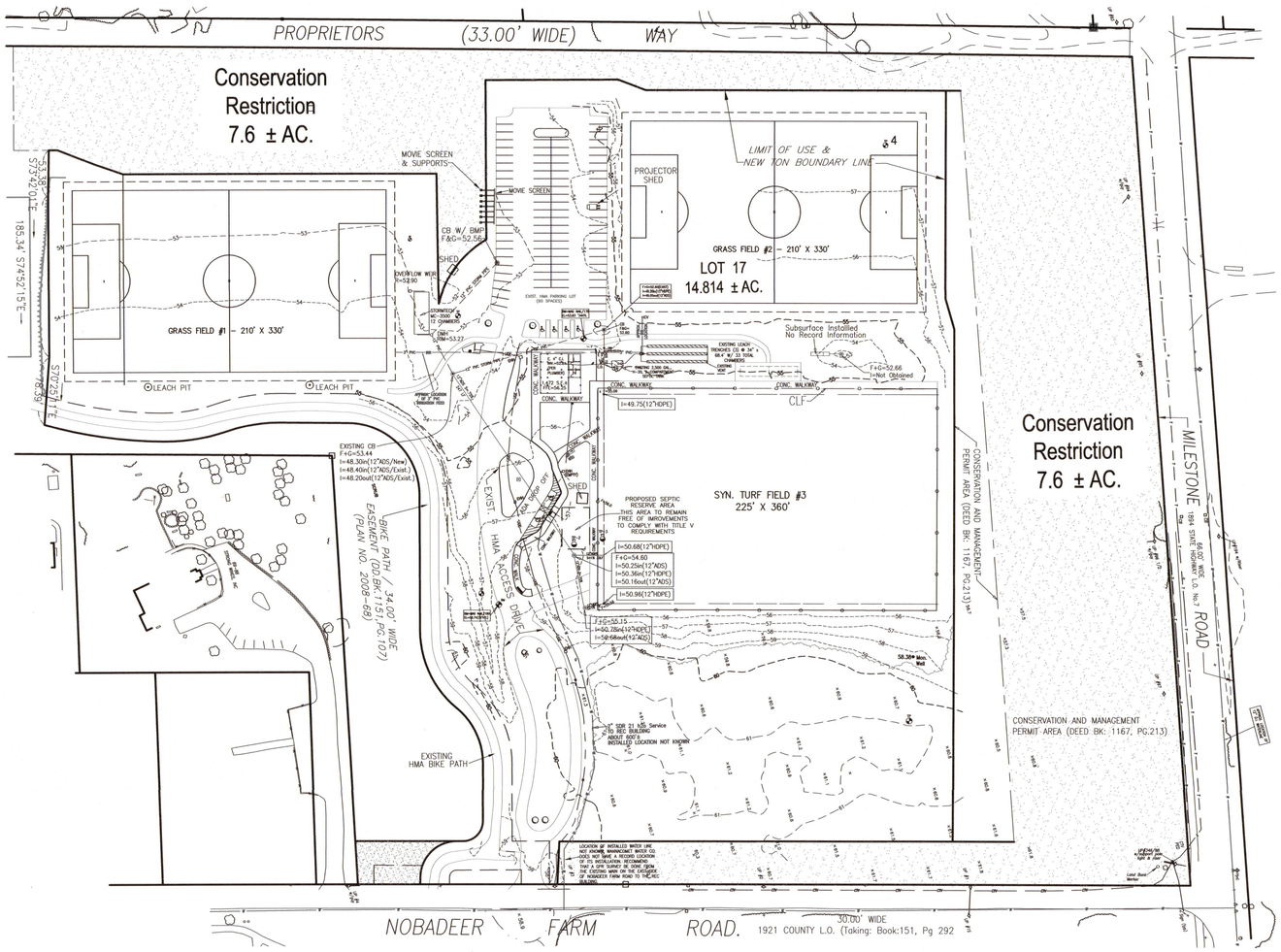

NO.	DATE	DESCRIPTION	BY

OWNER INFORMATION

TOWN OF NANTUCKET
DEED: 1980/ 083
PLAN NO. 2023-36
14.814 Acres
ASSESSOR'S MAP 69, PARCEL 1.1
#5 NOBADEER FARM ROAD

GRAPHIC SCALE

80 0 40 80 160 320

(IN FEET)
1 inch = 80 ft.

COMMONWEALTH OF MASSACHUSETTS
LEO C. ASADOORIAN
NO. 33930
PROFESSIONAL LAND SURVEYOR

12/19/25

BLACKWELL & ASSOCIATES, Inc.
PROFESSIONAL LAND SURVEYORS & CIVIL ENGINEERS
20 TEASDALE CIRCLE
NANTUCKET, MASSACHUSETTS 02554
(508) 228-9026
www.blackwellsurvey.com

EXISTING CONDITIONS PLAN

NOBADEER REC FIELDS
prepared for:
WESTON & SAMPSON / TOWN of NANTUCKET

SCALE: 1"=80' Nobadeer Farm Road, Nantucket, MA. DECEMBER 19, 2025

Design/Drawn by: LCA
Approved by: LCA

SHEET 1 *OF* 1 *B*–8739.3

V:\DRAWFILES\B8739\NFR-Rec Building\W&S-June 8 2025 block.dwg, 12/19/2025 12:24:40 PM, Canon TM-350.pc3, 1:80

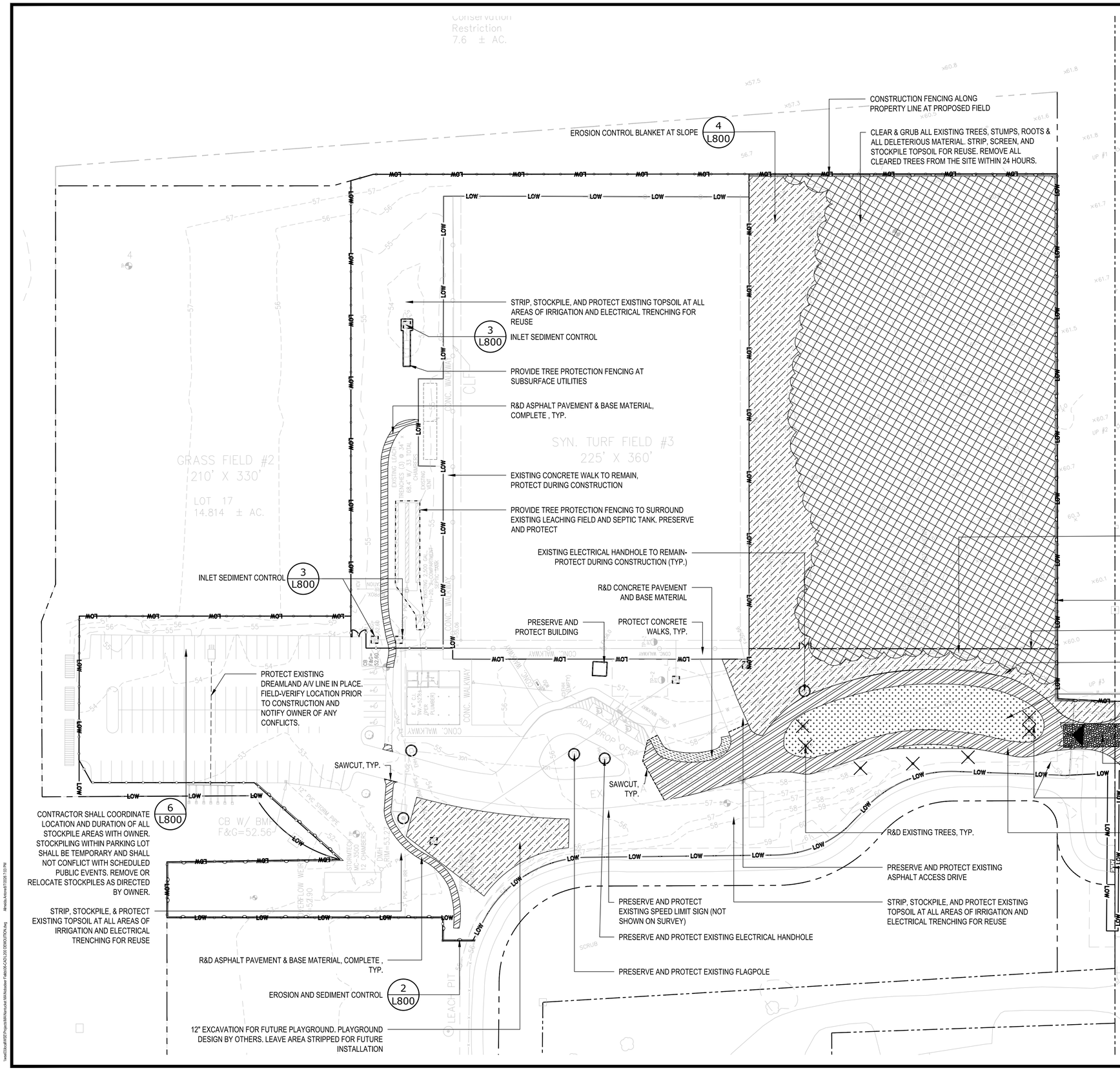

LEGEND

	PROPERTY LINE
LOW	LIMIT OF WORK LINE (L.O.W.)
	SAWCUT
2 L800	SILT FENCE
	CONSTRUCTION FENCE
	R&D EXISTING TREES
	PROTECT EXISTING SITE FEATURE
1 L800	INLET SEDIMENT CONTROLS
3 L800	TEMPORARY CONSTRUCTION ENTRANCE
TYP.	TYPICAL
EX.	EXISTING
R&D	REMOVE AND DEMOLISH
R&S	REMOVE AND STOCKPILE
P&P	PRESERVE AND PROTECT
	R&D BITUMINOUS CONCRETE PAVING / ASPHALT & BASE MATERIAL, COMPLETE
	STRIP, SCREEN & STOCKPILE TOPSOIL (6" DEPTH)
	STRIP, SCREEN & STOCKPILE TOPSOIL (12" DEPTH)
	CLEAR & GRUB ALL EXISTING TREES, STUMPS, ROOTS & ALL DELETERIOUS MATERIAL. STRIP, SCREEN, AND STOCKPILE TOPSOIL FOR REUSE. CHIP & REMOVE ALL CLEARED TREES FROM THE SITE IMMEDIATELY.

GENERAL NOTES:

1. ALL DRAINS WITHIN LIMIT OF WORK SHALL BE PROTECTED DURING CONSTRUCTION.
2. CONTRACTOR IS RESPONSIBLE FOR DEWATERING DURING CONSTRUCTION IN ACCORDANCE WITH THE MASSACHUSETTS EROSION AND SEDIMENT CONTROL GUIDELINES.
3. ALL EXISTING DRAINAGE STRUCTURES AND PIPING THAT RECEIVE RUNOFF FROM THE PROJECT OR THAT ARE DIRECTLY CONNECTED TO PROPOSED DRAINAGE FROM THE PROJECT SHALL BE INSPECTED AND CLEANED UPON PROJECT COMPLETION.
4. NO HEAVY EQUIPMENT ALLOWED ON EXISTING LEACHFIELD AND SEPTIC TANKS. INSTALL CONSTRUCTION FENCING IN THESE AREAS.
5. STRIP, STOCKPILE, AND PROTECT EXISTING TOPSOIL AT ALL AREAS OF IRRIGATION AND ELECTRICAL TRENCHING FOR REUSE.
6. REMOVE AND SALVAGE EXISTING SIGNAGE ON SITE FOR REINSTALLATION. SOME SIGNAGE MAY NOT BE SHOWN ON THE SURVEY AND SHALL BE INCLUDED.
7. FOR REMOVAL OF EXISTING ELECTRICAL LINES, REFER TO ELECTRICAL DRAWINGS

Project:
TOWN OF NANTUCKET

NOBADEER ATHLETIC FIELDS IMPROVEMENTS

7 NOBADEER FARM ROAD

Weston & Sampson Engineers, Inc.
1 Washington Mall, 10th Floor
Boston, MA 02108
978.532.1900 800.SAMPSON
www.westonandsampson.com

Consultants:

Revisions:

No.	Date	Description

COA:

Seal:

Issued For:
BID DOCUMENTS

Scale: AS NOTED

Date: AUGUST 7, 2026
Drawn By:
Reviewed By:
Approved By:
W&S Project No.: ENG24-1207
W&S File No.:

Drawing Title:
SITE PREPARATION & DEMOLITION PLAN

Sheet Number:
L200

COPYRIGHT © 2026 WESTON & SAMPSON, INC.

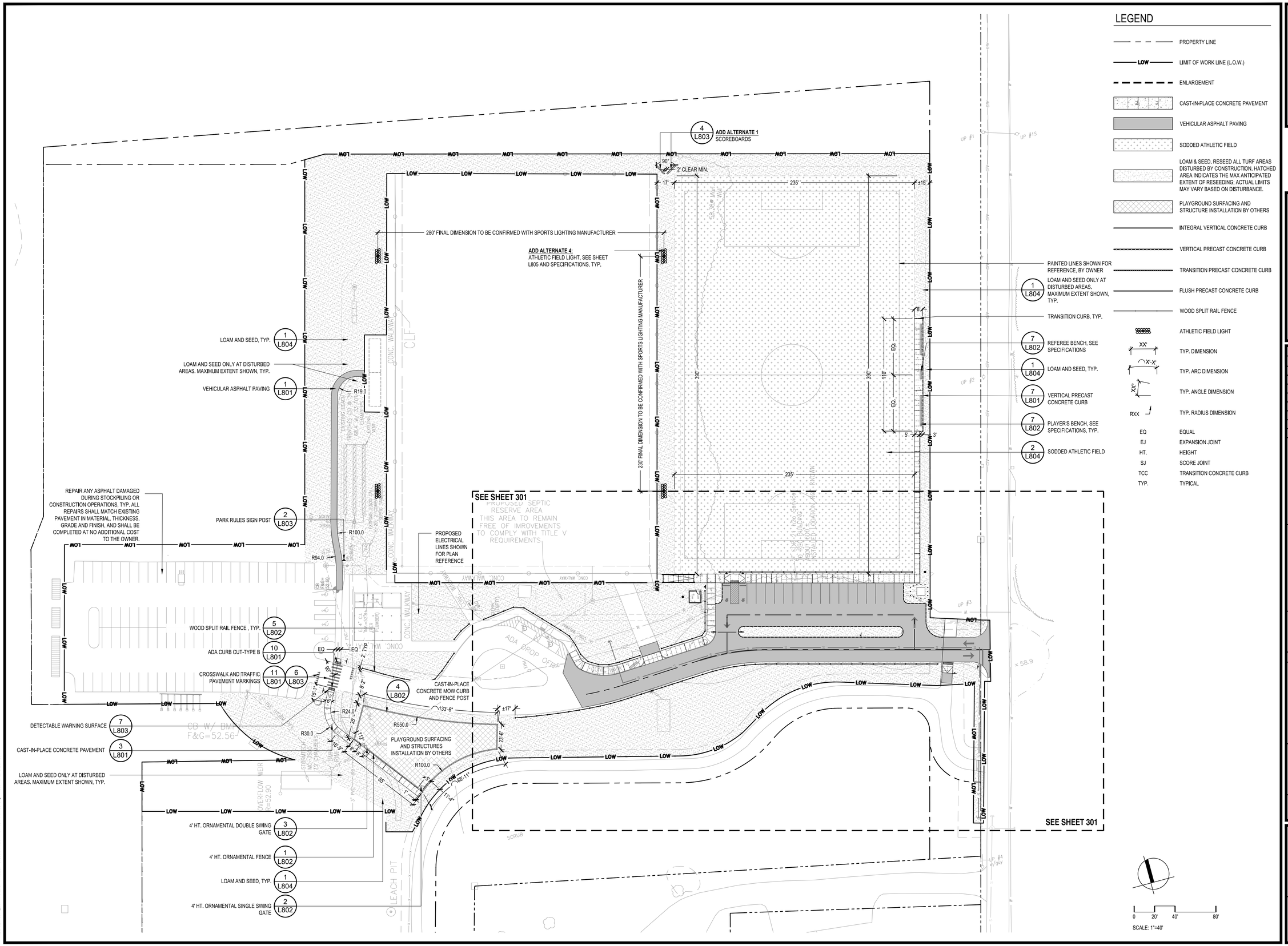

LEGEND

- PROPERTY LINE
- LIMIT OF WORK LINE (L.O.W.)
- ENLARGEMENT
- CAST-IN-PLACE CONCRETE PAVEMENT
- VEHICULAR ASPHALT PAVING
- SODDED ATHLETIC FIELD
- LOAM & SEED. RESEED ALL TURF AREAS DISTURBED BY CONSTRUCTION. HATCHED AREA INDICATES THE MAX ANTICIPATED EXTENT OF RESEEDING; ACTUAL LIMITS MAY VARY BASED ON DISTURBANCE.
- PLAYGROUND SURFACING AND STRUCTURE INSTALLATION BY OTHERS
- INTEGRAL VERTICAL CONCRETE CURB
- VERTICAL PRECAST CONCRETE CURB
- TRANSITION PRECAST CONCRETE CURB
- FLUSH PRECAST CONCRETE CURB
- WOOD SPLIT RAIL FENCE
- ATHLETIC FIELD LIGHT
- XX' — TYP. DIMENSION
- X'-X" — TYP. ARC DIMENSION
- XX° — TYP. ANGLE DIMENSION
- RXX — TYP. RADIUS DIMENSION

EQ	EQUAL
EJ	EXPANSION JOINT
HT.	HEIGHT
SJ	SCORE JOINT
TCC	TRANSITION CONCRETE CURB
TYP.	TYPICAL

Project:
TOWN OF NANTUCKET

NOBADEER ATHLETIC FIELDS IMPROVEMENTS

7 NOBADEER FARM ROAD

Weston & Sampson Engineers, Inc.
1 Washington Mall, 10th Floor
Boston, MA 02108
978.532.1900 800.SAMPSON
www.westonandsampson.com

Consultants:

Revisions:

No.	Date	Description

COA:

Seal:

Issued For:
BID DOCUMENTS

Scale: AS NOTED

Date: AUGUST 7, 2026
Drawn By:
Reviewed By:
Approved By:
W&S Project No.: ENG24-1207
W&S File No.:

Drawing Title:
LAYOUT & MATERIALS PLAN

Sheet Number:
L300

COPYRIGHT © 2026 WESTON & SAMPSON, INC.

LEGEND

PROPERTY LINE	INTEGRAL VERTICAL CONCRETE CURB	EQ	EQUAL
LIMIT OF WORK LINE (L.O.W.)	VERTICAL PRECAST CONCRETE CURB	EJ	EXPANSION JOINT
ENLARGEMENT	TRANSITION PRECAST CONCRETE CURB	HT.	HEIGHT
CAST-IN-PLACE CONCRETE PAVEMENT	FLUSH PRECAST CONCRETE CURB	SJ	SCORE JOINT
VEHICULAR ASPHALT PAVING	WOOD SPLIT RAIL FENCE	TCC	TRANSITION CONCRETE CURB
SODDED ATHLETIC FIELD	XX' TYP. DIMENSION	TYP.	TYPICAL
LOAM AND SEED	X'-X" TYP. ARC DIMENSION		
PLAYGROUND INSTALLATION BY OTHERS	XX° TYP. ANGLE DIMENSION		
ATHLETIC FIELD LIGHT	RXX TYP. RADIUS DIMENSION		

SCALE: 1"=20'

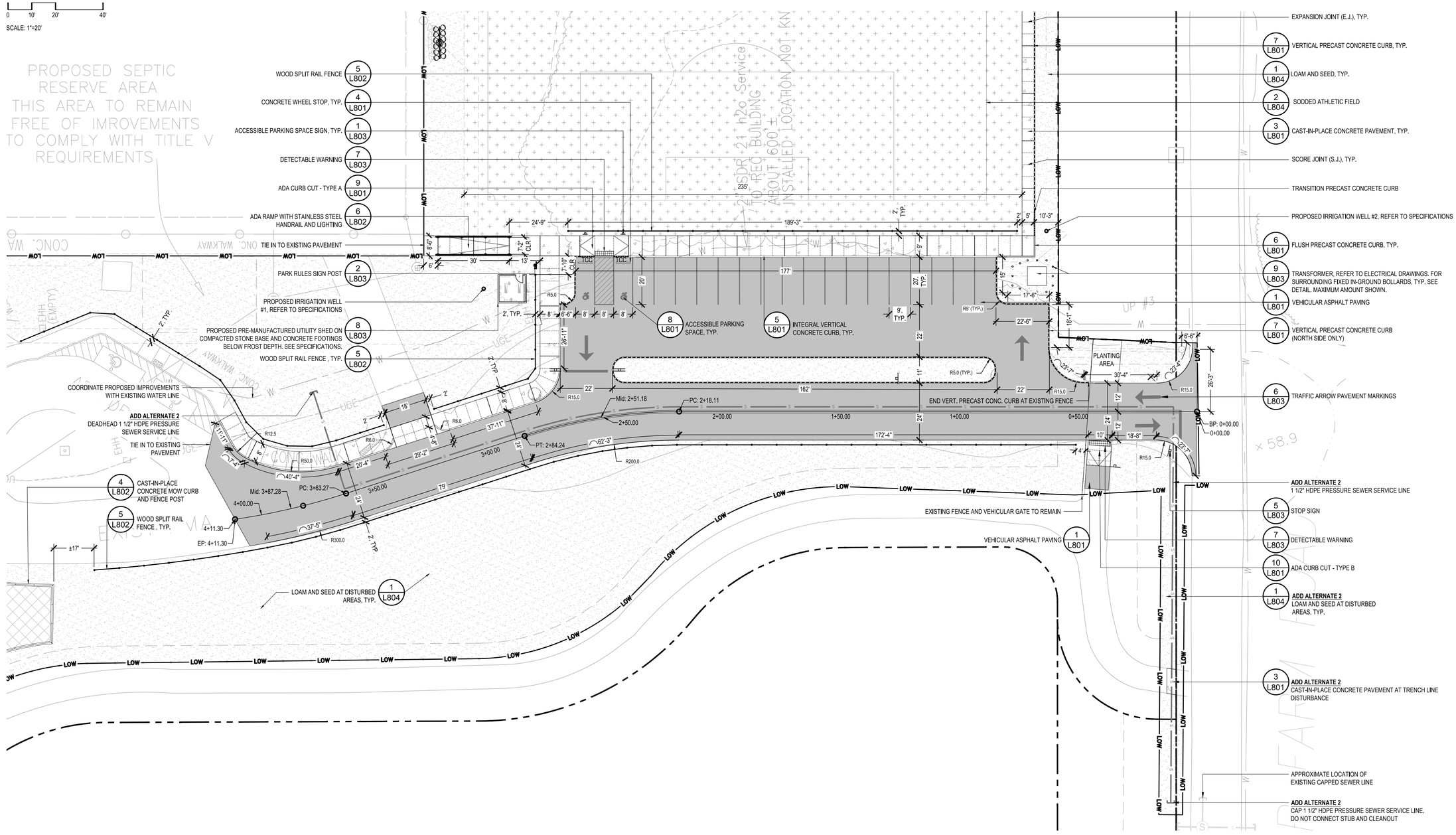

Project:
TOWN OF NANTUCKET

NOBADEER ATHLETIC FIELDS IMPROVEMENTS

7 NOBADEER FARM ROAD

Weston & Sampson Engineers, Inc.
1 Washington Mall, 10th Floor
Boston, MA 02108
978.532.1900 800.SAMPSON
www.westonandsampson.com

Consultants:

Revisions:

No.	Date	Description

COA:

Seal:

Issued For:
BID DOCUMENTS

Scale: AS NOTED

Date: AUGUST 7, 2026
Drawn By:
Reviewed By:
Approved By:
W&S Project No.: ENG24-1207
W&S File No.:

Drawing Title:
LAYOUT & MATERIALS ENLARGEMENT

Sheet Number:
L301

COPYRIGHT © 2026 WESTON & SAMPSON, INC.

IDENTIFI-CATION NUMBER	SIZE OF SIGN		TEXT	TEXT DIMENSIONS (INCHES)			NUMBER OF SIGNS REQUIRED	COLOR			POST SIZE AND NUMBER REQUIRED	UNIT AREA (S.F.)	AREA IN SQUARE FEET
	WIDTH	HEIGHT		LETTER HEIGHT	VERTICAL SPACING	ARROW RTE. MKR.		BACK-GROUND	LEGEND	BORDER			
R1-1	30"	30"	STOP	SEE MUTCD, 11TH EDITION WITH REVISION 1, DECEMBER 2025; THE 2026 MASSACHUSETTS AMENDMENTS; AND THE CURRENT STANDARD HIGHWAY SIGNS PUBLICATION.			3	RED	WHITE	WHITE	(1) 4"x4" PT LUMBER POST CHARCOAL SLATE PAINT	6.25	18.75
R1-1 BIKE PATH	18"	18"	STOP				1	RED	WHITE	WHITE	(1) 4"x4" PT LUMBER POST CHARCOAL SLATE PAINT	2.25	2.25
R1-5	36"	36"	HERE TO				2	WHITE	BLACK	BLACK	(1) 4"x4" PT LUMBER POST CHARCOAL SLATE PAINT	9	18
R5-1	30"	30"	DO NOT ENTER				2	RED	WHITE	WHITE	MOUNT BACK TO BACK WITH R1-1	6.25	12.50
R7-8	12"	18"	RESERVED PARKING				2	WHITE	GREEN	GREEN	(1) 4"x4" PT LUMBER POST CHARCOAL SLATE PAINT	1.5	3
R7-8aP	12"	6"	VAN ACCESSIBLE				2	WHITE	GREEN	GREEN	(1) 4"x4" PT LUMBER POST CHARCOAL SLATE PAINT	0.50	1

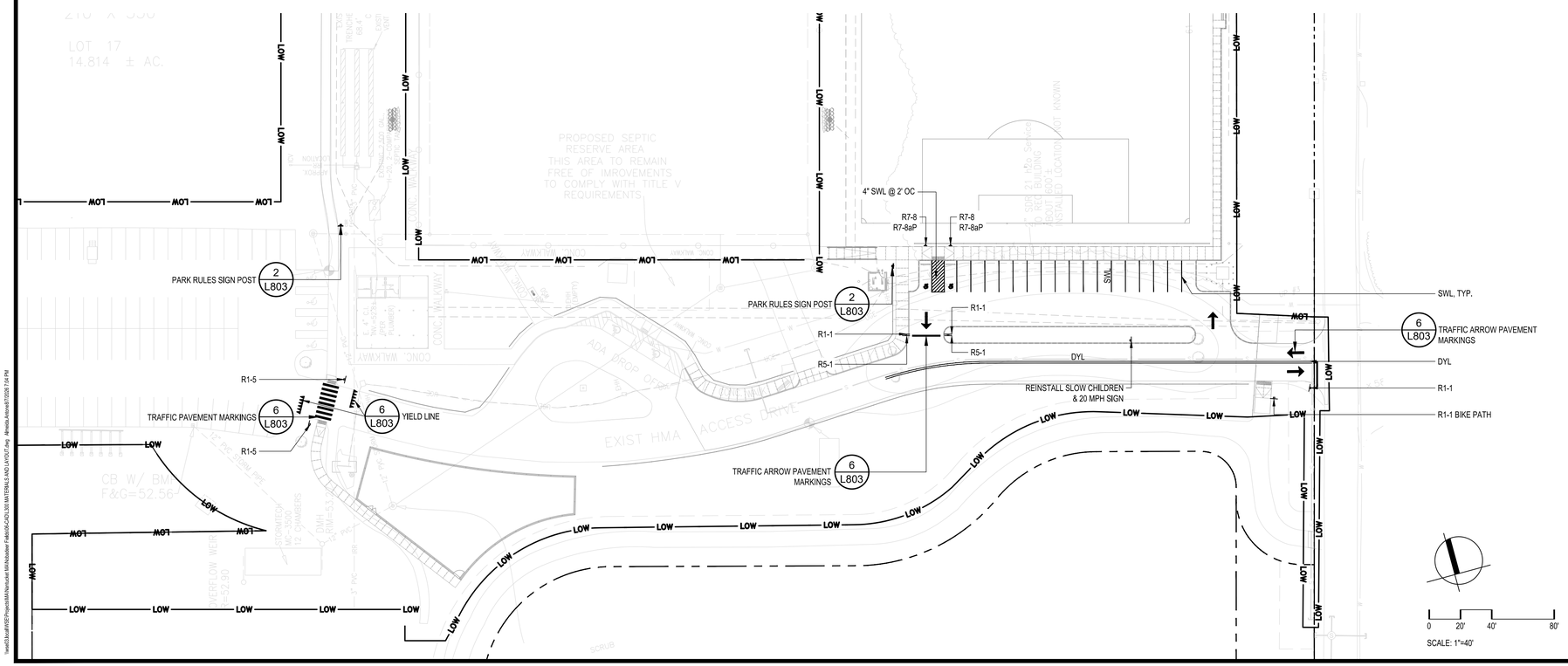

LEGEND

	PROPERTY LINE
LOW	LIMIT OF WORK
DYL	DOUBLE YELLOW CENTER LINE
SWL	SINGLE WHITE LINE, 4"
	YIELD LINE - PAVEMENT ARROW AND LEGENDS (EPOXY)
	CROSSWALK
TYP.	TYPICAL

Project:
TOWN OF NANTUCKET

NOBADEER ATHLETIC FIELDS IMPROVEMENTS

7 NOBADEER FARM ROAD

Weston & Sampson Engineers, Inc.
1 Washington Mall, 10th Floor
Boston, MA 02108
978.532.1900 800.SAMPSON
www.westonandsampson.com

Consultants:

Revisions:

No.	Date	Description

COA:

Seal:

Issued For:
BID DOCUMENTS

Scale: AS NOTED

Date: AUGUST 7, 2026
Drawn By:
Reviewed By:
Approved By:
W&S Project No.: ENG24-1207
W&S File No.:

Drawing Title:
ROADWAY ALIGNMENT & SIGNAGE PLAN

Sheet Number:
L302

COPYRIGHT © 2026 WESTON & SAMPSON, INC.

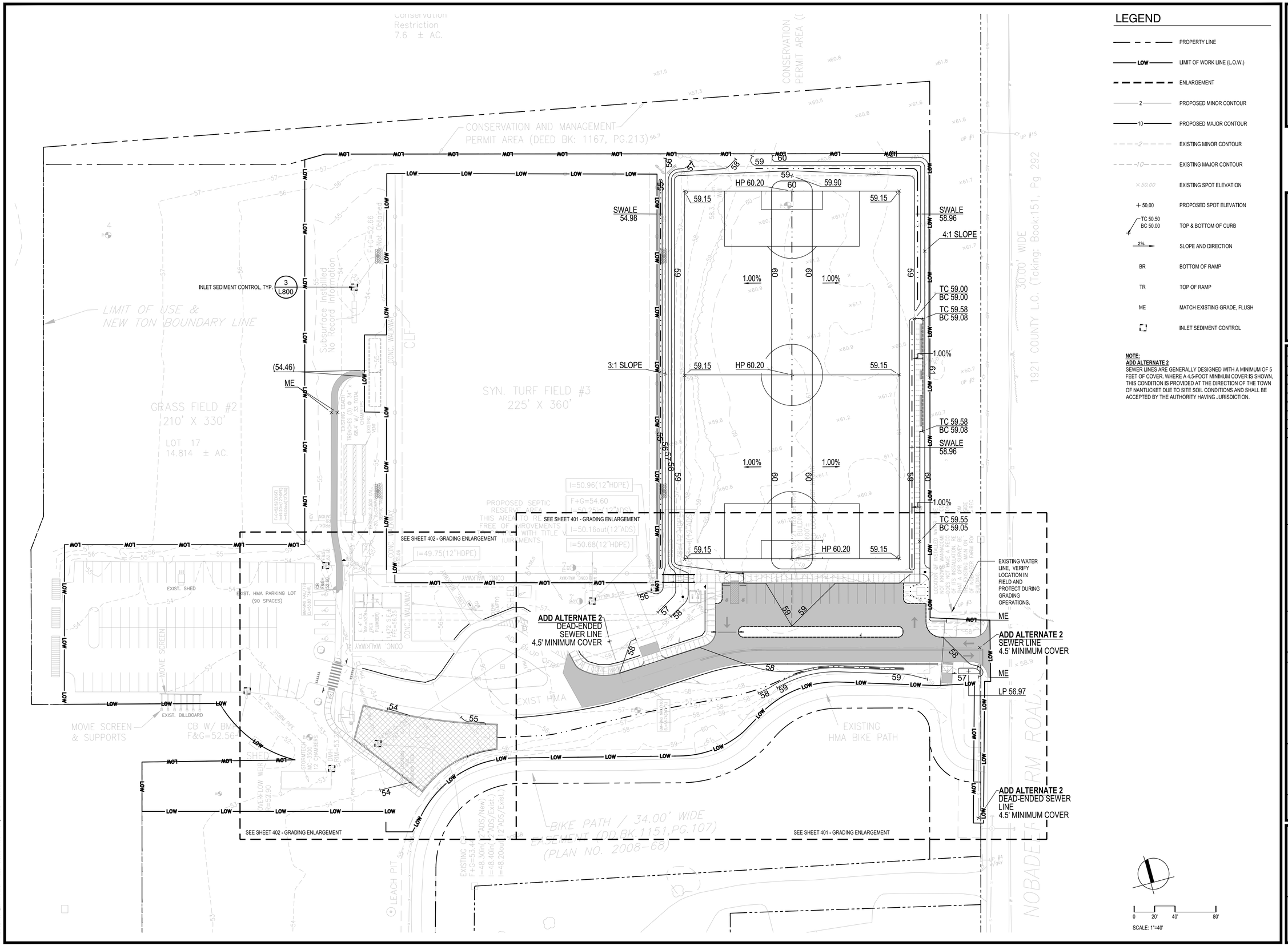

LEGEND

— — —	PROPERTY LINE
LOW	LIMIT OF WORK LINE (L.O.W.)
— — —	ENLARGEMENT
2	PROPOSED MINOR CONTOUR
10	PROPOSED MAJOR CONTOUR
2	EXISTING MINOR CONTOUR
10	EXISTING MAJOR CONTOUR
× 50.00	EXISTING SPOT ELEVATION
+ 50.00	PROPOSED SPOT ELEVATION
TC 50.50 BC 50.00	TOP & BOTTOM OF CURB
2%	SLOPE AND DIRECTION
BR	BOTTOM OF RAMP
TR	TOP OF RAMP
ME	MATCH EXISTING GRADE, FLUSH
	INLET SEDIMENT CONTROL

NOTE:
ADD ALTERNATE 2
SEWER LINES ARE GENERALLY DESIGNED WITH A MINIMUM OF 5 FEET OF COVER. WHERE A 4.5-FOOT MINIMUM COVER IS SHOWN, THIS CONDITION IS PROVIDED AT THE DIRECTION OF THE TOWN OF NANTUCKET DUE TO SITE SOIL CONDITIONS AND SHALL BE ACCEPTED BY THE AUTHORITY HAVING JURISDICTION.

Project:
TOWN OF NANTUCKET
NOBADEER ATHLETIC FIELDS IMPROVEMENTS
7 NOBADEER FARM ROAD

Weston & Sampson Engineers, Inc.
1 Washington Mall, 10th Floor
Boston, MA 02108
978.532.1900 800.SAMPSON
www.westonandsampson.com

Consultants:

Revisions:

No.	Date	Description

COA:

Seal:
MASSACHUSETTS REGISTERED LANDSCAPE ARCHITECT NO. 4040

Issued For:
BID DOCUMENTS

Scale: AS NOTED

Date: AUGUST 7, 2026
Drawn By:
Reviewed By:
Approved By:
W&S Project No.: ENG24-1207
W&S File No.:

Drawing Title:
GRADING PLAN

Sheet Number:
L400

COPYRIGHT © 2026 WESTON & SAMPSON, INC.

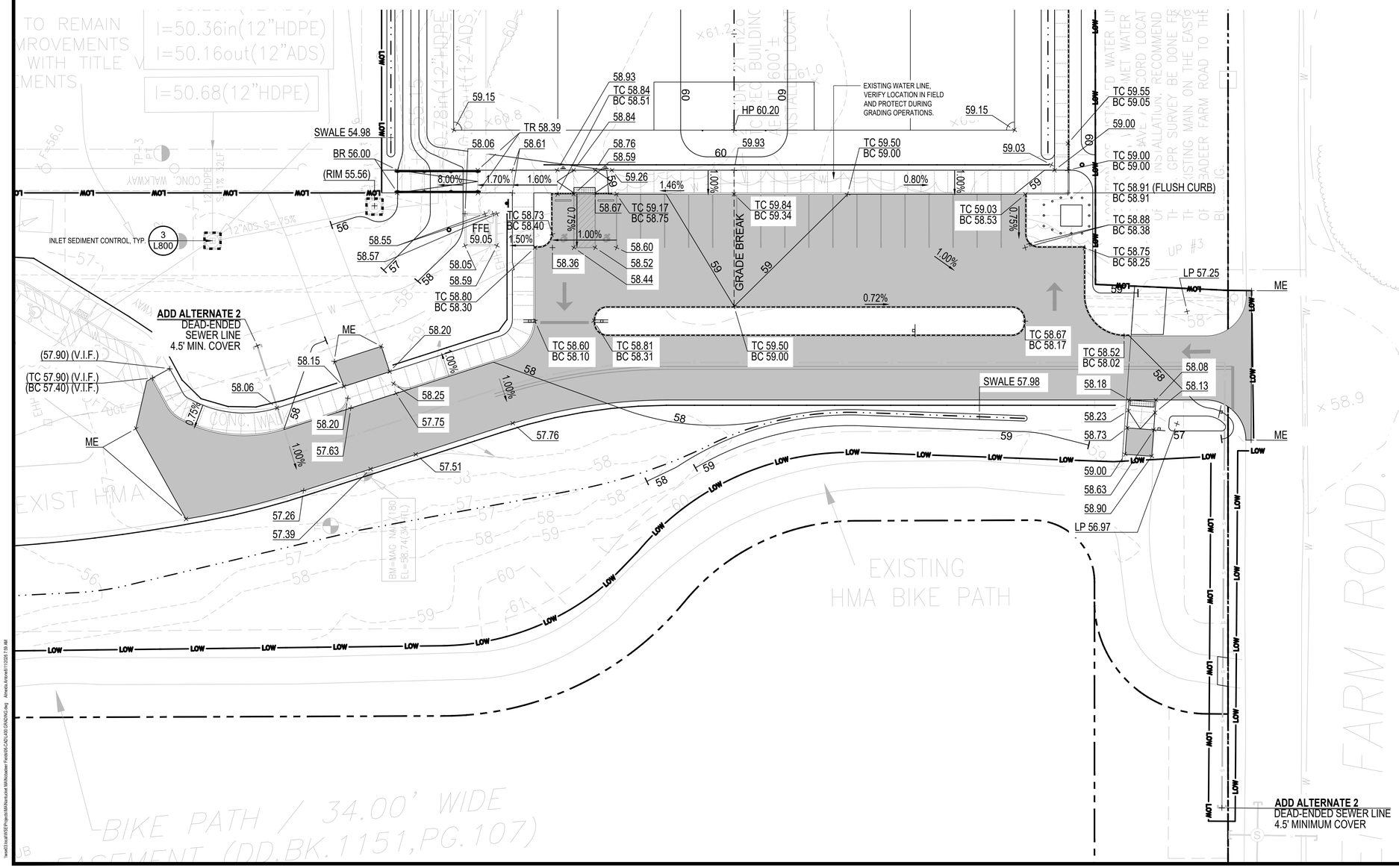

LEGEND

— — —	PROPERTY LINE
LOW	LIMIT OF WORK LINE (L.O.W.)
2	PROPOSED MINOR CONTOUR
10	PROPOSED MAJOR CONTOUR
-2-	EXISTING MINOR CONTOUR
-10-	EXISTING MAJOR CONTOUR
× 50.00	EXISTING SPOT ELEVATION
+ 50.00	PROPOSED SPOT ELEVATION
TC 50.50 / BC 50.00	TOP & BOTTOM OF CURB
2%	SLOPE AND DIRECTION
BR	BOTTOM OF RAMP
TR	TOP OF RAMP
ME	MATCH EXISTING GRADE FLUSH
	INLET SEDIMENT CONTROL

NOTE:
ADD ALTERNATE 2
SEWER LINES ARE GENERALLY DESIGNED WITH A MINIMUM OF 5 FEET OF COVER. WHERE A 4.5-FOOT MINIMUM COVER IS SHOWN, THIS CONDITION IS PROVIDED AT THE DIRECTION OF THE TOWN OF NANTUCKET DUE TO SITE SOIL CONDITIONS AND SHALL BE ACCEPTED BY THE AUTHORITY HAVING JURISDICTION.

Project:
TOWN OF NANTUCKET

NOBADEER ATHLETIC FIELDS IMPROVEMENTS

7 NOBADEER FARM ROAD

Weston & Sampson Engineers, Inc.
1 Washington Mall, 10th Floor
Boston, MA 02108
978.532.1900 800.SAMPSON
www.westonandsampson.com

Consultants:

Revisions:

No.	Date	Description

COA:

Seal:

Issued For:
BID DOCUMENTS

Scale: AS NOTED

Date: AUGUST 7, 2026
Drawn By:
Reviewed By:
Approved By:
W&S Project No.: ENG24-1207
W&S File No.:

Drawing Title:
GRADING ENLARGEMENT

Sheet Number:
L401

COPYRIGHT © 2026 WESTON & SAMPSON, INC.

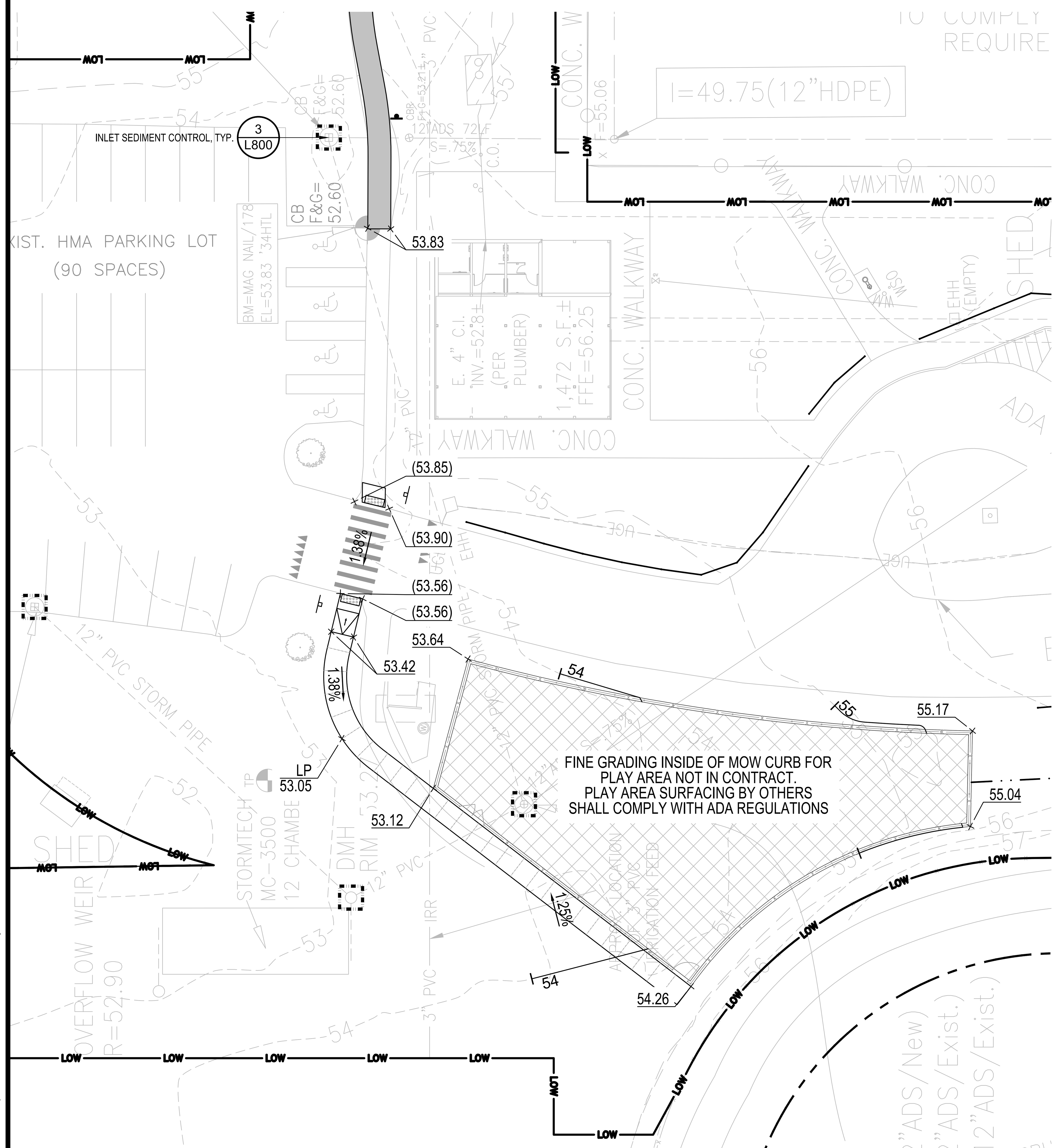

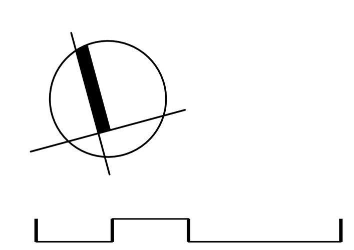

SCALE: 1"=20'

LEGEND

Symbol	Description
— — —	PROPERTY LINE
LOW	LIMIT OF WORK LINE (L.O.W.)
2	PROPOSED MINOR CONTOUR
10	PROPOSED MAJOR CONTOUR
2	EXISTING MINOR CONTOUR
10	EXISTING MAJOR CONTOUR
× 50.00	EXISTING SPOT ELEVATION
+ 50.00	PROPOSED SPOT ELEVATION
TC 50.50 BC 50.00	TOP & BOTTOM OF CURB
2%	SLOPE AND DIRECTION
BR	BOTTOM OF RAMP
TR	TOP OF RAMP
ME	MATCH EXISTING GRADE FLUSH
	INLET SEDIMENT CONTROL

NOTE:
ADD ALTERNATE 2
SEWER LINES ARE GENERALLY DESIGNED WITH A MINIMUM OF 5 FEET OF COVER. WHERE A 4.5-FOOT MINIMUM COVER IS SHOWN, THIS CONDITION IS PROVIDED AT THE DIRECTION OF THE TOWN OF NANTUCKET DUE TO SITE SOIL CONDITIONS AND SHALL BE ACCEPTED BY THE AUTHORITY HAVING JURISDICTION.

Project:
TOWN OF NANTUCKET

NOBADEER ATHLETIC FIELDS IMPROVEMENTS

7 NOBADEER FARM ROAD

Weston & Sampson
Weston & Sampson Engineers, Inc.
1 Washington Mall, 10th Floor
Boston, MA 02108
978.532.1900 800.SAMPSON
www.westonandsampson.com

Consultants:

Revisions:

No.	Date	Description

COA:

Seal:

Issued For:
BID DOCUMENTS

Scale: AS NOTED

Date: AUGUST 7, 2026
Drawn By:
Reviewed By:
Approved By:
W&S Project No.: ENG24-1207
W&S File No.:

Drawing Title:
GRADING ENLARGEMENT

Sheet Number:
L402

COPYRIGHT © 2026 WESTON & SAMPSON, INC.

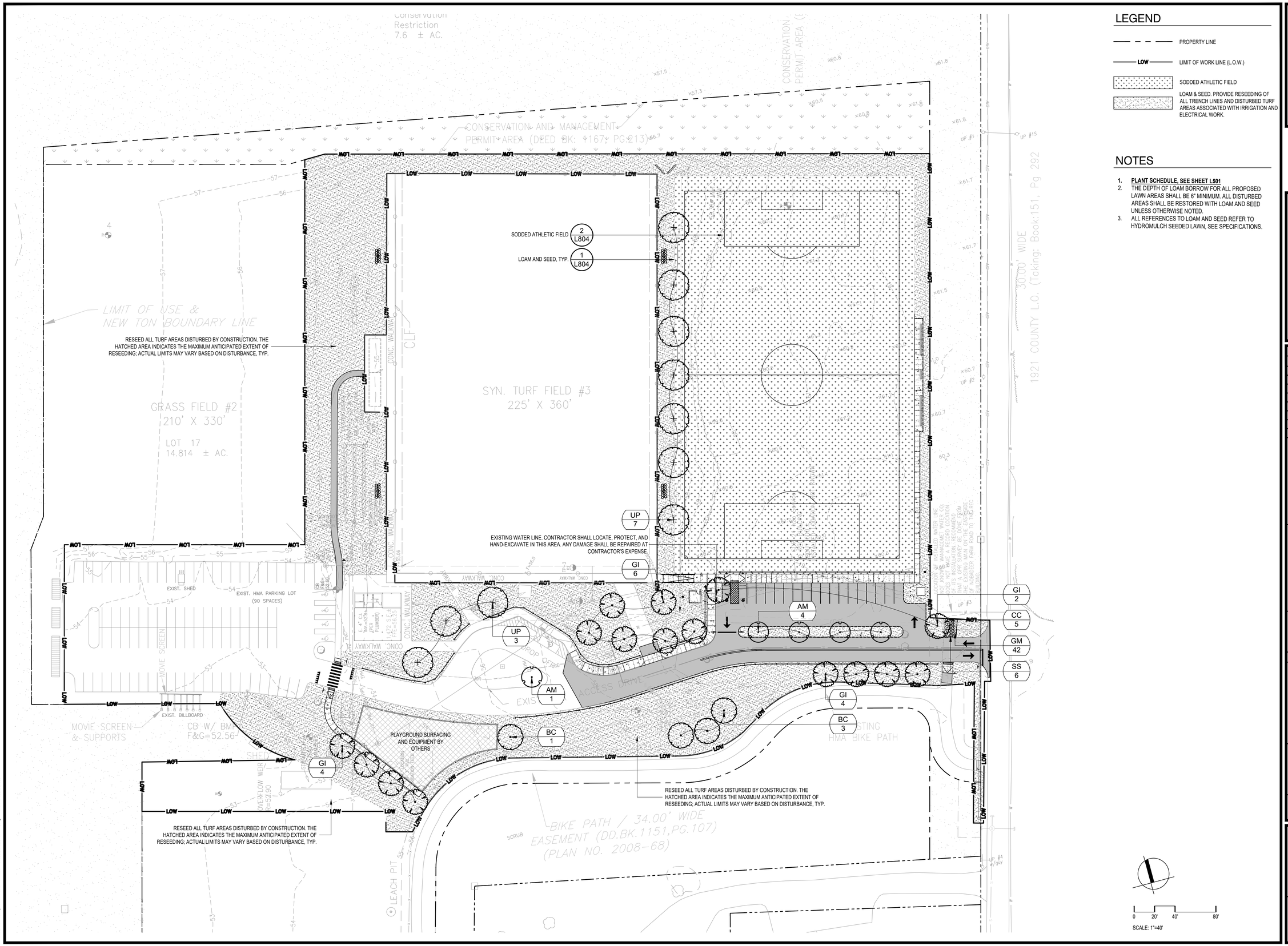

LEGEND

- PROPERTY LINE
- LIMIT OF WORK LINE (L.O.W.)
- SODDED ATHLETIC FIELD
- LOAM & SEED. PROVIDE RESEEDING OF ALL TRENCH LINES AND DISTURBED TURF AREAS ASSOCIATED WITH IRRIGATION AND ELECTRICAL WORK.

NOTES

1. **PLANT SCHEDULE, SEE SHEET L501**
2. THE DEPTH OF LOAM BORROW FOR ALL PROPOSED LAWN AREAS SHALL BE 6" MINIMUM. ALL DISTURBED AREAS SHALL BE RESTORED WITH LOAM AND SEED UNLESS OTHERWISE NOTED.
3. ALL REFERENCES TO LOAM AND SEED REFER TO HYDROMULCH SEEDED LAWN, SEE SPECIFICATIONS.

Project:
TOWN OF NANTUCKET

NOBADEER ATHLETIC FIELDS IMPROVEMENTS

7 NOBADEER FARM ROAD

Weston & Sampson Engineers, Inc.
1 Washington Mall, 10th Floor
Boston, MA 02108
978.532.1900 800.SAMPSON
www.westonandsampson.com

Consultants:

Revisions:

No.	Date	Description

COA:

Seal:

Issued For:
BID DOCUMENTS

Scale: AS NOTED

Date: AUGUST 7, 2026
Drawn By:
Reviewed By:
Approved By:
W&S Project No.: ENG24-1207
W&S File No.:

Drawing Title:
PLANTING PLAN

Sheet Number:
L500

COPYRIGHT © 2026 WESTON & SAMPSON, INC.

PLANT SCHEDULE

SYMBOL	CODE	BOTANICAL NAME	COMMON NAME	SIZE	CONTAINER	QTY	DETAIL	REMARKS
TREES								
	AM	AMELANCHIER CANADENSIS	CANADIAN SERVICEBERRY MULTI-TRUNK	2.5-3" CAL	B&B	5		
	BC	BETULA NIGRA 'CULLY'	HERITAGE® RIVER BIRCH	6`-7` HT.	B&B	4		SINGLE STEM
	GI	GLEDITSIA TRIACANTHOS INERMIS `SKYCOLE`	SKYLINE® HONEY LOCUST	2.5-3" CAL	B&B	16		
	UP	ULMUS AMERICANA `PRINCETON`	PRINCETON AMERICAN ELM	2.5-3" CAL	B&B	10		
SHRUBS								
	CC	CLETHRA ALNIFOLIA `CALEB`	VANILLA SPICE® SUMMERSWEET	#3	CONTAINER	5		
	SS	SCHIZACHYRIUM SCOPARIUM	LITTLE BLUESTEM	12"-24" HT.	#1	6		

SYMBOL	CODE	BOTANICAL NAME	COMMON NAME	SIZE	CONTAINER	SPACING	QTY	DETAIL	REMARKS
GROUND COVERS									
	GM	GERANIUM MACULATUM	SPOTTED GERANIUM	FLAT		15" o.c.	42		

Project:
TOWN OF NANTUCKET

NOBADEER ATHLETIC FIELDS IMPROVEMENTS

7 NOBADEER FARM ROAD

Weston & Sampson
Weston & Sampson Engineers, Inc.
1 Washington Mall, 10th Floor
Boston, MA 02108
978.532.1900 800.SAMPSON
www.westonandsampson.com

Consultants:

Revisions:

No.	Date	Description

COA:

Seal:

Issued For:
BID DOCUMENTS

Scale: AS NOTED

Date: AUGUST 7, 2026
Drawn By:
Reviewed By:
Approved By:

W&S Project No.: ENG24-1207
W&S File No.:

Drawing Title:
PLANT SCHEDULE

Sheet Number:
L501

COPYRIGHT © 2026 WESTON & SAMPSON, INC.

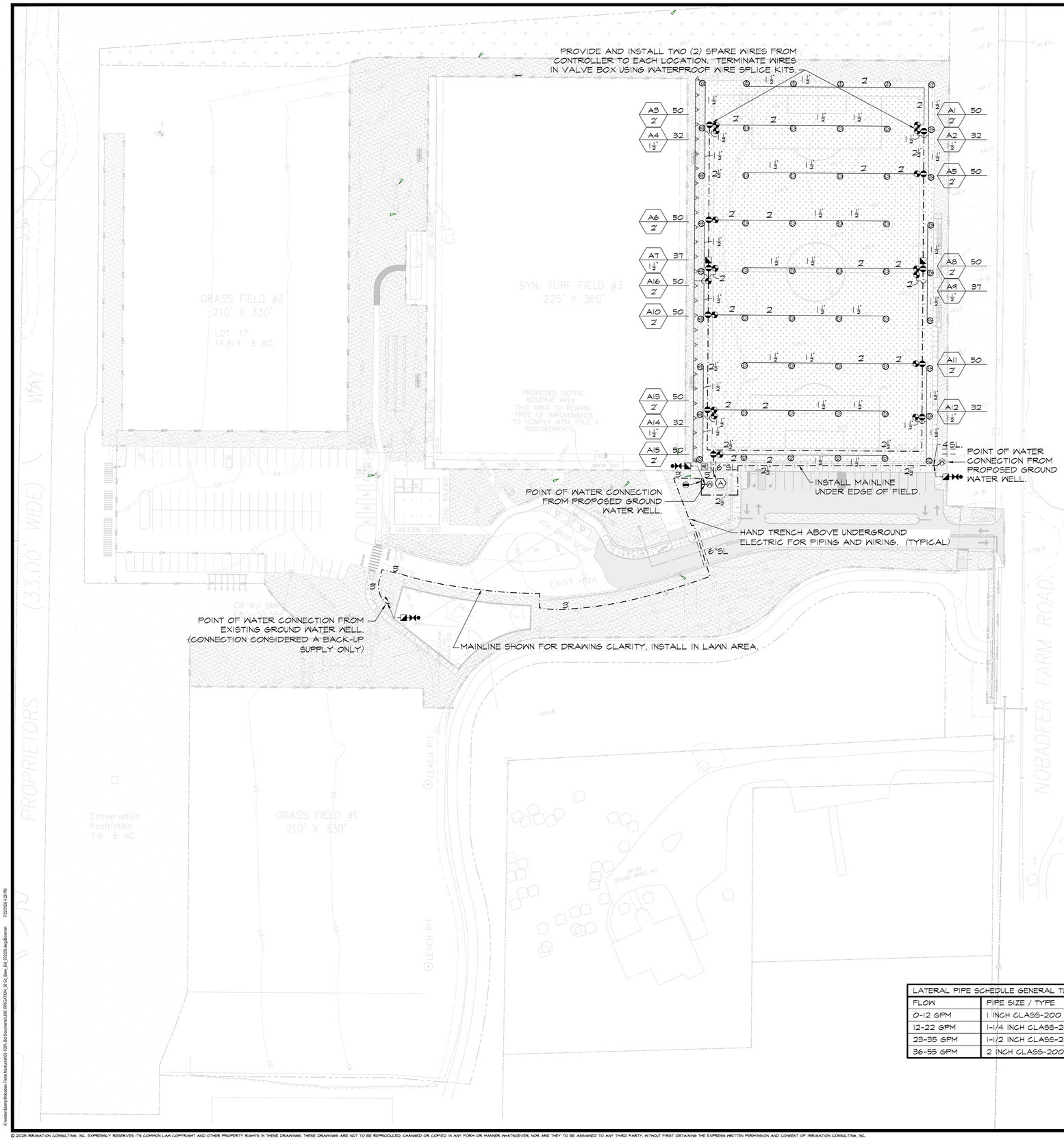

IRRIGATION LEGEND			
SYMBOL	PSI	SPACING	DESCRIPTION
G H F	60	50'	ROTARY SPRINKLER WITH CHECK VALVE (STANDARD NOZZLES)
G H F	50 50 40	35' 25' 18'	MEDIUM ROTARY SPRINKLER WITH CHECK VALVE (STANDARD NOZZLES)
G H TG V	30 30 30 30 30 30	15' 12' 10' 8' 5' 4x30'	6-INCH POP UP SPRAY SPRINKLER WITH CHECK VALVE AND PRESSURE REGULATION
			24 VOLT ELECTRIC ZONE VALVE (SEE VALVE DESIGNATOR FOR FLOW AND SIZES)
			2-1/2" ISOLATION GATE VALVE
			BRONZE ISOLATION VALVE FOR CONTROL VALVES
			1" QUICK COUPLING VALVE
			2" MASTER VALVE AND FLOW SENSOR
			CLASS-200 PVC LATERAL PIPING (SIZE AS INDICATED FOR SOCCER FIELD) (SEE LATERAL PIPE SCHEDULE SIZES FOR GENERAL TURF AREAS)
			CLASS-200 PVC MAINLINE PIPING
			CLASS-200 PVC PIPE SLEEVE (SIZE AS INDICATED) INSTALL SCH-40 PVC WIRE CONDUIT ADJACENT TO MAINLINE PIPE SLEEVES. MINIMUM WIRE CONDUIT SIZE TO BE 2-INCH. SEE SLEEVING DETAIL.
R			AUTOMATIC RAIN SENSOR
A			AUTOMATIC CONTROLLER
			EXISTING GROUNDWATER WELL (BACK-UP, 100 GPM)
			PROPOSED GROUNDWATER WELL (TWO LOCATIONS) (+/- 50 GPM EACH)

VALVE DESIGNATION:

A 40 ← FLOW
1½" ← VALVE SIZE
STATION NO.

LATERAL PIPE SCHEDULE GENERAL TURF AREAS	
FLOW	PIPE SIZE / TYPE
0-12 GPM	1 INCH CLASS-200 PVC
12-22 GPM	1-1/4 INCH CLASS-200 PVC
23-35 GPM	1-1/2 INCH CLASS-200 PVC
36-55 GPM	2 INCH CLASS-200 PVC

IRRIGATION NOTES

1. COORDINATE FINAL LOCATION OF SPRINKLERS AND NOZZLE SELECTION WITH FINAL APPROVED SOCCER FIELD LAYOUT AND GENERAL TURF AREAS.

2. PIPE AND VALVE LOCATIONS ARE DIAGRAMMATIC, CONTRACTOR SHALL FIELD VERIFY.

3. VALVES AND VALVE BOXES FOR SOCCER FIELD SHALL BE PLACED AWAY FROM PLAYING SURFACE.

4. CONTROL WIRE SHALL BE #14 GAUGE SINGLE STRAND, RED FOR TURF ZONES. COMMON WIRE SHALL BE #14 GAUGE SINGLE STRAND WHITE AND SPARE WIRES, INSTALLED WHERE SHOWN, SHALL BE #14 GAUGE SINGLE STRAND BLUE.

5. QUICK COUPLING VALVES SHALL BE INSTALLED ON 1 INCH PVC SWING JOINTS WITH BRASS INSERTS AND STABILIZERS. (SEE DETAIL)

6. SPRAY AND MEDIUM ROTARY SPRINKLERS SHALL BE INSTALLED ON SWING PIPE ASSEMBLIES, MINIMUM LENGTH TO BE 6 INCHES, 18 INCH MAXIMUM. LARGE ROTARY SPRINKLERS SHALL BE INSTALLED ON 1-INCH PVC PREFABRICATED UNITIZED SWING JOINT ASSEMBLIES WITH INTEGRAL O-RINGS.

7. IRRIGATION SYSTEM IS DESIGNED FOR SEPARATE WATER SUPPLY TO PROVIDE 100 GPM MAX EACH FROM ONE EXISTING AND TWO PROPOSED GROUND WATER WELL SERVICES. SYSTEM TO PRODUCE 80-PSI DYNAMIC PRESSURE AT IRRIGATION CONTRACTOR'S POINT OF CONNECTION IN LANDSCAPED AREA.

8. CONTRACTOR SHALL TEST DYNAMIC PRESSURE BEFORE STARTING WORK, REPORT ANY DEVIATION FROM PRESSURE REQUIRED TO OWNER'S REPRESENTATIVE BEFORE CONTINUING.

9. INSTALL CONTROLLER IN IRRIGATION CONTROL SHED AS DIRECTED BY OWNER'S REPRESENTATIVE, HARD WIRE TO 120 VOLT, DEDICATED 20 AMP CIRCUIT, BUILDING POWER SUPPLY USING LICENSED ELECTRICIAN. ROUTE TWO-WIRE COMMUNICATION CABLES TO CONTROLLER VIA 3-INCH CONDUIT.

10. INSTALL WIRELESS RAIN SENSOR ON EXTERIOR IRRIGATION CONTROL SHED WALL WHERE DIRECTED BY OWNER'S REPRESENTATIVE. INSTALL WIRELESS RECEIVER NEXT TO CONTROLLER.

11. ABOVE GROUND WIRING, INSIDE AND OUTSIDE OF BUILDING, SHALL BE INSTALLED IN RIGID, METALLIC CONDUIT FOR VANDALISM PROTECTION.

12. COORDINATE LOCATION OF EXISTING AND FUTURE UTILITIES ON SITE AND CONTACT PROPER AUTHORITIES AND UTILITY COMPANIES BEFORE THE START OF WORK.

13. CONTRACTOR MUST SUBMIT SHOP PRODUCT DRAWINGS AS PER THE WRITTEN SPECIFICATIONS TO THE IRRIGATION CONSULTANT FOR APPROVAL PRIOR TO ORDERING MATERIAL AND BEGINNING WORK.

14. ANY AND ALL MATERIAL SUBSTITUTIONS WHICH VARY FROM THE SPECIFIED PRODUCTS MUST BE SUBMITTED TO THE IRRIGATION CONSULTANT FOR APPROVAL AS PART OF THE SUBMITTAL PROCESS.

15. ONCE APPROVED SUBMITTALS HAVE BEEN RETURNED TO THE CONTRACTOR, WORK MAY BEGIN. THE IRRIGATION CONSULTANT MUST BE NOTIFIED A MINIMUM OF 7-DAYS IN ADVANCE OF THE START OF WORK TO COORDINATE ON-SITE SUPERVISION AND ADMINISTRATION.

16. SEE IRRIGATION DETAILS AND SPECIFICATIONS SECTION FOR ADDITIONAL NECESSARY INFORMATION.

0 25' 50' 100'
SCALE: 1"=50'

Project:
TOWN OF NANTUCKET

NOBADEER ATHLETIC FIELDS IMPROVEMENTS

7 NOBADEER FARM ROAD

Weston & Sampson Engineers, Inc.
1 Washington Mall, 10th Floor
Boston, MA 02108
978.532.1900 800.SAMPSON
www.westonandsampson.com

Consultants:

Irrigation Consulting, Inc.
Providing innovative design solutions for irrigation worldwide.
20 Merrit Parkway
Nashua, NH 03062
(978) 455.8972
14504 S. Old Statesville Rd., Suite 104
Huntersville, NC 28078
(704) 845.3688
www.irrigationconsulting.com

Revisions:

No.	Date	Description

COA:

Seal:

Issued For:
BID DOCUMENTS

Scale: AS NOTED

Date: AUGUST 7, 2026
Drawn By: GD
Reviewed By: JB
Approved By: JB
W&S Project No.: ENG24-1207
W&S File No.: ----

Drawing Title:
IRRIGATION PLAN BASE

Sheet Number:
L700

© 2025 IRRIGATION CONSULTING, INC. EXPRESSLY RESERVES ITS COMMON LAW COPYRIGHT AND OTHER PROPERTY RIGHTS IN THESE DRAWINGS. THESE DRAWINGS ARE NOT TO BE REPRODUCED, CHANGED OR COPIED IN ANY FORM OR MANNER WHATSOEVER, NOR ARE THEY TO BE ASSIGNED TO ANY THIRD PARTY, WITHOUT FIRST OBTAINING THE EXPRESS WRITTEN PERMISSION AND CONSENT OF IRRIGATION CONSULTING, INC.

COPYRIGHT © 2026 WESTON & SAMPSON, INC.

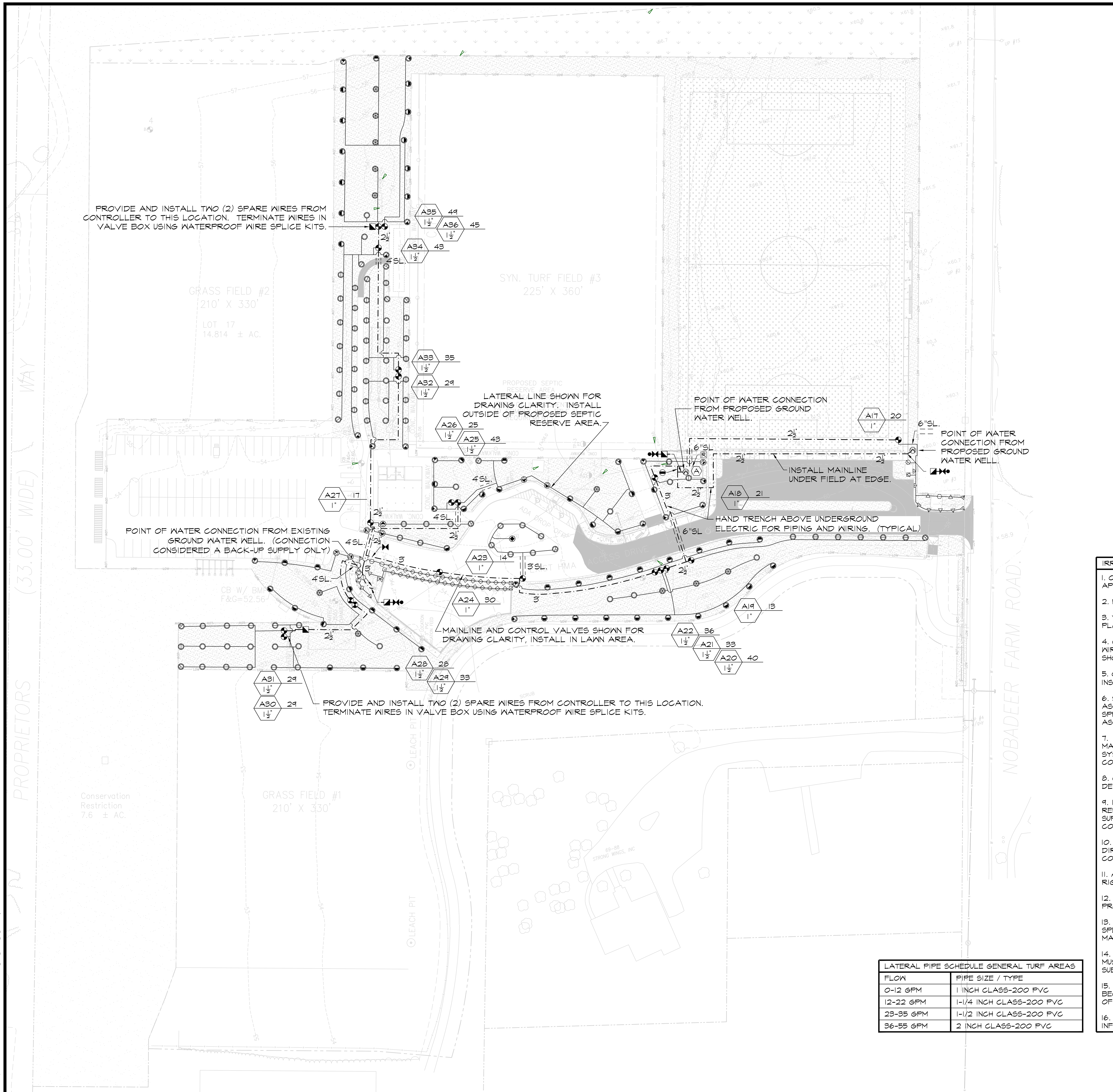

IRRIGATION LEGEND

SYMBOL (Q H F / Q H TQ V)	PSI	SPACING	DESCRIPTION
	60	50'	ROTARY SPRINKLER WITH CHECK VALVE (STANDARD NOZZLES)
	50	35'	MEDIUM ROTARY SPRINKLER WITH CHECK VALVE (STANDARD NOZZLES)
	50	25'	
	40	18'	
	30	15'	6-INCH POP UP SPRAY SPRINKLER WITH CHECK VALVE AND PRESSURE REGULATION
	30	12'	
	30	10'	
	30	8'	
	30	5'	
	30	4'x30'	
			24 VOLT ELECTRIC ZONE VALVE (SEE VALVE DESIGNATOR FOR FLOW AND SIZES)
			2-1/2" ISOLATION GATE VALVE
			BRONZE ISOLATION VALVE FOR CONTROL VALVES
			1" QUICK COUPLING VALVE
			2" MASTER VALVE AND FLOW SENSOR
			CLASS-200 PVC LATERAL PIPING (SIZE AS INDICATED FOR SOCCER FIELD) (SEE LATERAL PIPE SCHEDULE SIZES FOR GENERAL TURF AREAS)
			CLASS-200 PVC MAINLINE PIPING
			CLASS-200 PVC PIPE SLEEVE (SIZE AS INDICATED) INSTALL SCH-40 PVC WIRE CONDUIT ADJACENT TO MAINLINE PIPE SLEEVES, MINIMUM WIRE CONDUIT SIZE TO BE 2-INCH. SEE SLEEVING DETAIL.
R			AUTOMATIC RAIN SENSOR
A			AUTOMATIC CONTROLLER
			EXISTING GROUNDWATER WELL (BACK-UP, 100 GPM)
			PROPOSED GROUNDWATER WELL (TWO LOCATIONS) (+/- 50 GPM EACH)

VALVE DESIGNATION:

A — STATION NO.
40 ← FLOW
1½" — VALVE SIZE

IRRIGATION NOTES

1. COORDINATE FINAL LOCATION OF SPRINKLERS AND NOZZLE SELECTION WITH FINAL APPROVED SOCCER FIELD LAYOUT AND GENERAL TURF AREAS.
2. PIPE AND VALVE LOCATIONS ARE DIAGRAMMATIC, CONTRACTOR SHALL FIELD VERIFY.
3. VALVES AND VALVE BOXES FOR SOCCER FIELD SHALL BE PLACED AWAY FROM PLAYING SURFACE.
4. CONTROL WIRE SHALL BE #14 GAUGE SINGLE STRAND, RED FOR TURF ZONES. COMMON WIRE SHALL BE #14 GAUGE SINGLE STRAND WHITE AND SPARE WIRES, INSTALLED WHERE SHOWN, SHALL BE #14 GAUGE SINGLE STRAND BLUE.
5. QUICK COUPLING VALVES SHALL BE INSTALLED ON 1 INCH PVC SWING JOINTS WITH BRASS INSERTS AND STABILIZERS. (SEE DETAIL)
6. SPRAY AND MEDIUM ROTARY SPRINKLERS SHALL BE INSTALLED ON SWING PIPE ASSEMBLIES, MINIMUM LENGTH TO BE 6 INCHES, 18 INCH MAXIMUM. LARGE ROTARY SPRINKLERS SHALL BE INSTALLED ON 1-INCH PVC PREFABRICATED UNITIZED SWING JOINT ASSEMBLIES WITH INTEGRAL O-RINGS.
7. IRRIGATION SYSTEM IS DESIGNED FOR SEPARATE WATER SUPPLY TO PROVIDE 100 GPM MAX EACH FROM ONE EXISTING AND TWO PROPOSED GROUND WATER WELL SERVICES. SYSTEM TO PRODUCE 80-PSI DYNAMIC PRESSURE AT IRRIGATION CONTRACTOR'S POINT OF CONNECTION IN LANDSCAPED AREA.
8. CONTRACTOR SHALL TEST DYNAMIC PRESSURE BEFORE STARTING WORK, REPORT ANY DEVIATION FROM PRESSURE REQUIRED TO OWNER'S REPRESENTATIVE BEFORE CONTINUING.
9. INSTALL CONTROLLER IN IRRIGATION CONTROL SHED AS DIRECTED BY OWNER'S REPRESENTATIVE, HARD WIRE TO 120 VOLT, DEDICATED 20 AMP CIRCUIT, BUILDING POWER SUPPLY USING LICENSED ELECTRICIAN. ROUTE TWO-WIRE COMMUNICATION CABLES TO CONTROLLER VIA 3-INCH CONDUIT.
10. INSTALL WIRELESS RAIN SENSOR ON EXTERIOR IRRIGATION CONTROL SHED WALL WHERE DIRECTED BY OWNER'S REPRESENTATIVE. INSTALL WIRELESS RECEIVER NEXT TO CONTROLLER.
11. ABOVE GROUND WIRING, INSIDE AND OUTSIDE OF BUILDING, SHALL BE INSTALLED IN RIGID, METALLIC CONDUIT FOR VANDALISM PROTECTION.
12. COORDINATE LOCATION OF EXISTING AND FUTURE UTILITIES ON SITE AND CONTACT PROPER AUTHORITIES AND UTILITY COMPANIES BEFORE THE START OF WORK.
13. CONTRACTOR MUST SUBMIT SHOP PRODUCT DRAWINGS AS PER THE WRITTEN SPECIFICATIONS TO THE IRRIGATION CONSULTANT FOR APPROVAL PRIOR TO ORDERING MATERIAL AND BEGINNING WORK.
14. ANY AND ALL MATERIAL SUBSTITUTIONS WHICH VARY FROM THE SPECIFIED PRODUCTS MUST BE SUBMITTED TO THE IRRIGATION CONSULTANT FOR APPROVAL AS PART OF THE SUBMITTAL PROCESS.
15. ONCE APPROVED SUBMITTALS HAVE BEEN RETURNED TO THE CONTRACTOR, WORK MAY BEGIN. THE IRRIGATION CONSULTANT MUST BE NOTIFIED A MINIMUM OF 7-DAYS IN ADVANCE OF THE START OF WORK TO COORDINATE ON-SITE SUPERVISION AND ADMINISTRATION.
16. SEE IRRIGATION DETAILS AND SPECIFICATIONS SECTION FOR ADDITIONAL NECESSARY INFORMATION.

LATERAL PIPE SCHEDULE GENERAL TURF AREAS

FLOW	PIPE SIZE / TYPE
0-12 GPM	1 INCH CLASS-200 PVC
12-22 GPM	1-1/4 INCH CLASS-200 PVC
23-35 GPM	1-1/2 INCH CLASS-200 PVC
36-55 GPM	2 INCH CLASS-200 PVC

0 25' 50' 100'
SCALE: 1"=50'

Project: TOWN OF NANTUCKET

NOBADEER ATHLETIC FIELDS IMPROVEMENTS

7 NOBADEER FARM ROAD

Weston & Sampson
Weston & Sampson Engineers, Inc.
1 Washington Mall, 10th Floor
Boston, MA 02108
978.532.1900 800.SAMPSON
www.westonandsampson.com

Consultants:
Irrigation Consulting, Inc.
Providing innovative design solutions for irrigation worldwide.
20 Merrit Parkway Nashua, NH 03062 (978) 433.8972
14504 S. Old Statesville Rd, Suite 109 Huntersville, NC 28078 (704) 843.3688
www.irrigationconsulting.com

No.	Date	Description

Revisions:

COA:

Seal:

Issued For: BID DOCUMENTS

Scale: AS NOTED

Date: AUGUST 7, 2026
Drawn By: GD
Reviewed By: JB
Approved By: JB
W&S Project No.: ENG24-1207
W&S File No.: ----

Drawing Title: IRRIGATION PLAN ALTERNATE #3

Sheet Number: L701

© 2025 IRRIGATION CONSULTING, INC. EXPRESSLY RESERVES ITS COMMON LAW COPYRIGHT AND OTHER PROPERTY RIGHTS IN THESE DRAWINGS. THESE DRAWINGS ARE NOT TO BE REPRODUCED, CHANGED OR COPIED IN ANY FORM OR MANNER WHATSOEVER, NOR ARE THEY TO BE ASSIGNED TO ANY THIRD PARTY, WITHOUT FIRST OBTAINING THE EXPRESS WRITTEN PERMISSION AND CONSENT OF IRRIGATION CONSULTING, INC.

COPYRIGHT © 2026 WESTON & SAMPSON, INC.

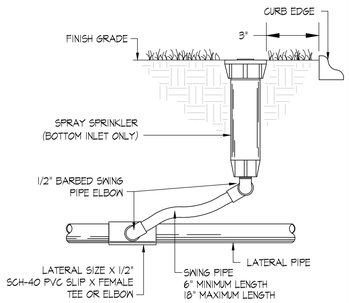

1 SPRAY SPRINKLER DETAIL
NO SCALE

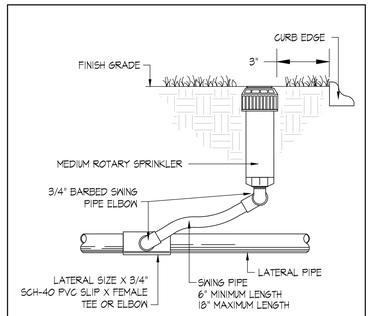

2 ROTARY SPRINKLER DETAIL
NO SCALE

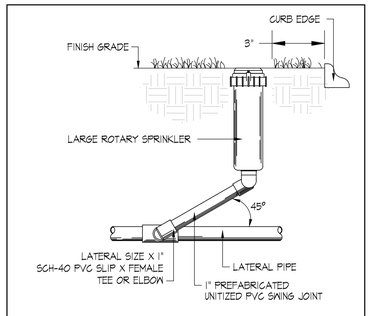

3 LARGE ROTARY SPRINKLER DETAIL
NO SCALE

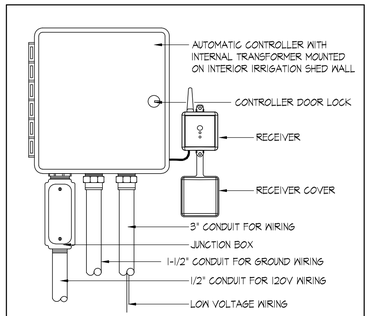

4 AUTOMATIC CONTROLLER DETAIL
NO SCALE

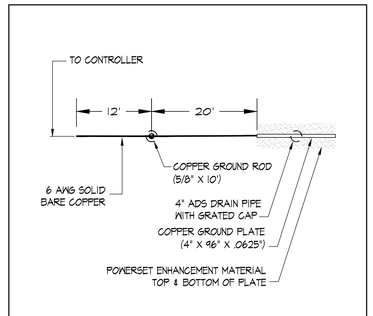

5 CONTROLLER GROUNDING DETAIL-PLAN
NO SCALE

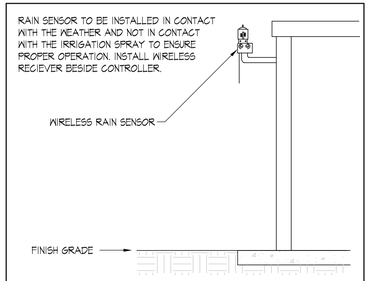

6 RAIN SENSOR MOUNTING DETAIL
NO SCALE

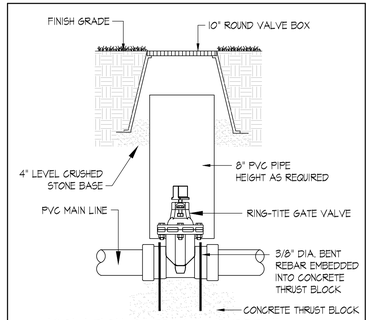

7 ISOLATION GATE VALVE DETAIL
NO SCALE (3" IN SIZE)

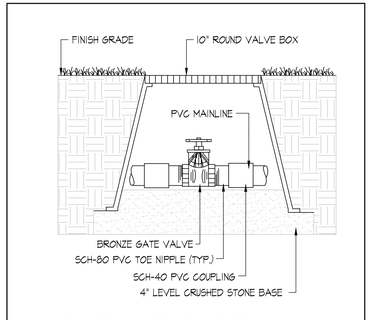

8 ISOLATION GATE VALVE DETAIL
NO SCALE (2-1/2" AND SMALLER)

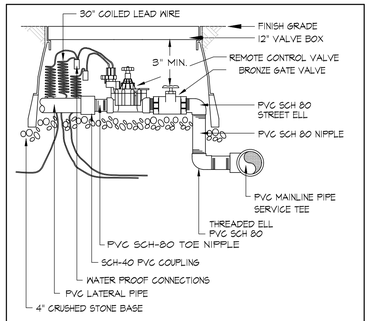

9 24 VOLT ELECTRIC VALVE DETAIL
NO SCALE

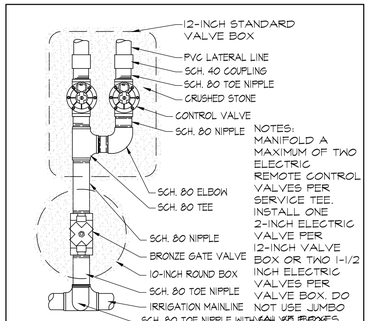

NOTES:
MANIFOLD A MAXIMUM OF TWO ELECTRIC REMOTE CONTROL VALVES PER SERVICE TEE. INSTALL ONE 2-INCH ELECTRIC VALVE PER 12-INCH VALVE BOX OR TWO 1-1/2 INCH ELECTRIC VALVES PER VALVE BOX. DO NOT USE JUMBO ~~SCH. 80 ELBOXES.~~

10 CONTROL VALVE MANIFOLD DETAIL
NO SCALE

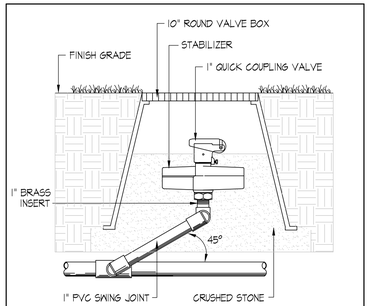

11 QUICK COUPLING VALVE DETAIL
NO SCALE

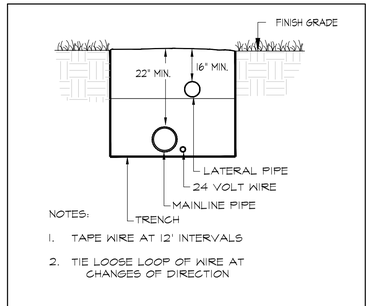

NOTES:
1. TAPE WIRE AT 12' INTERVALS
2. TIE LOOSE LOOP OF WIRE AT CHANGES OF DIRECTION

12 TRENCH AND WIRE DETAIL
NO SCALE

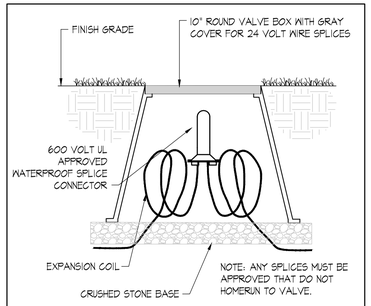

13 WIRE SPLICE DETAIL
NO SCALE

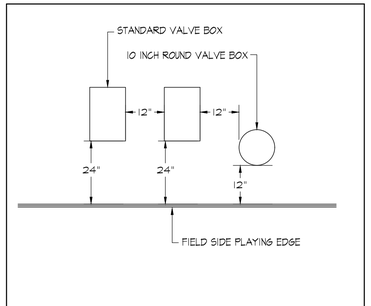

14 VALVE BOX INSTALLATION DETAIL
NO SCALE

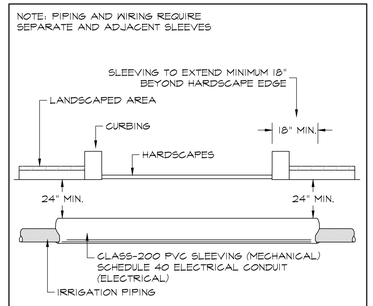

15 PIPE AND WIRE SLEEVING DETAIL
NO SCALE

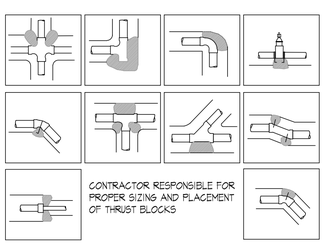

16 THRUST BLOCKING DETAIL
NO SCALE

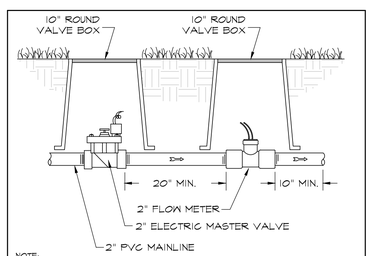

NOTE:
1. NO TURNS/BENDS IN THE PIPE WILL BE PERMITTED 20' BEFORE AND 10' AFTER THE FLOW METER ON 2" MAINLINE.
2. INSTALL 10" ROUND VALVE BOXES FOR MASTER VALVE AND FLOW METER.
3. INSTALL HUNTER HC FLOW METER WITH SCH. 80 PVC FEMALE ADAPTERS

17 MASTER VALVE AND FLOW METER
NO SCALE

Project:
TOWN OF NANTUCKET

NOBADEER ATHLETIC FIELDS IMPROVEMENTS

7 NOBADEER FARM ROAD

Weston & Sampson Engineers, Inc.
1 Washington Mall, 10th Floor
Boston, MA 02108
978.532.1900 800.SAMPSON
www.westonandsampson.com

Consultants:

Irrigation Consulting, Inc.
Providing innovative design solutions for irrigation worldwide
20 Merrit Parkway
Nashua, NH 03062
(978) 433.8472
14504 S. Old Statesville Rd., Suite 109
Huntersville, NC 28078
(704) 845.3688
www.irrigationconsulting.com

Revisions:

No.	Date	Description

COA:

Seal:

Issued For:
BID DOCUMENTS

Scale: AS NOTED

Date: AUGUST 7, 2026
Drawn By: GD
Reviewed By: JB
Approved By: JB
W&S Project No.: ENG24-1207
W&S File No.:

Drawing Title:
IRRIGATION DETAILS

Sheet Number:
L702

© 2025 IRRIGATION CONSULTING, INC. EXPRESSLY RESERVES ITS COMMON LAW COPYRIGHT AND OTHER PROPERTY RIGHTS IN THESE DRAWINGS. THESE DRAWINGS ARE NOT TO BE REPRODUCED, CHANGED OR COPIED IN ANY FORM OR MANNER WHATSOEVER, NOR ARE THEY TO BE ASSIGNED TO ANY THIRD PARTY, WITHOUT FIRST OBTAINING THE EXPRESS WRITTEN PERMISSION AND CONSENT OF IRRIGATION CONSULTING, INC.

COPYRIGHT © 2026 WESTON & SAMPSON, INC.

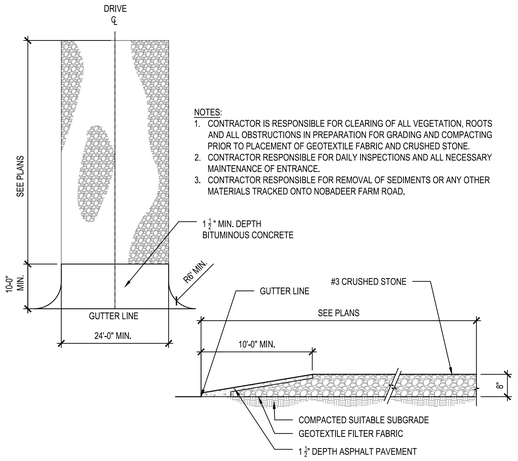

NOTES:
1. CONTRACTOR IS RESPONSIBLE FOR CLEARING OF ALL VEGETATION, ROOTS AND ALL OBSTRUCTIONS IN PREPARATION FOR GRADING AND COMPACTING PRIOR TO PLACEMENT OF GEOTEXTILE FABRIC AND CRUSHED STONE.
2. CONTRACTOR RESPONSIBLE FOR DAILY INSPECTIONS AND ALL NECESSARY MAINTENANCE OF ENTRANCE.
3. CONTRACTOR RESPONSIBLE FOR REMOVAL OF SEDIMENTS OR ANY OTHER MATERIALS TRACKED ONTO NOBADEER FARM ROAD.

1 TEMPORARY CONSTRUCTION ENTRANCE, TYP.

NOT TO SCALE

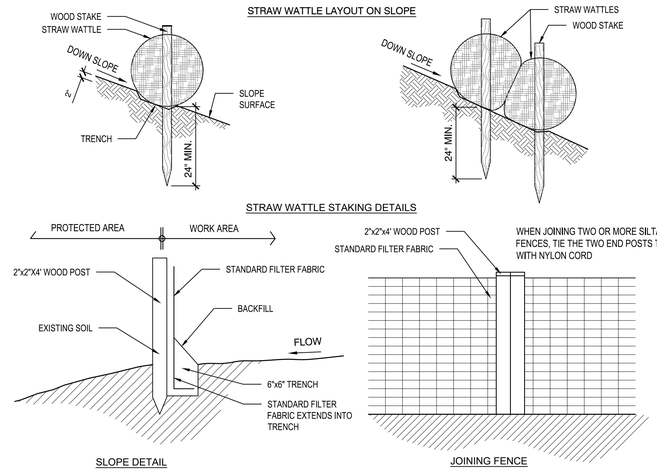

2 EROSION AND SEDIMENT CONTROL, TYP.

NOT TO SCALE

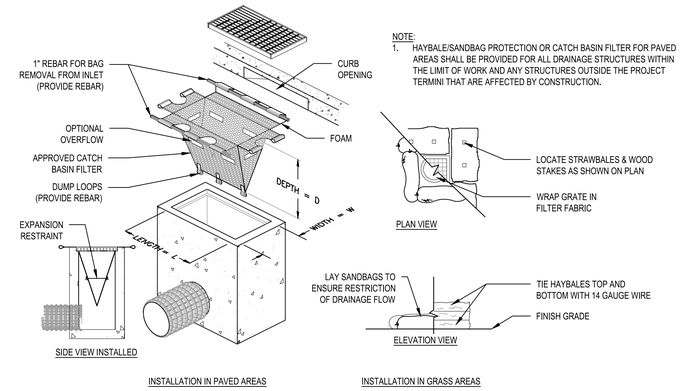

NOTE:
1. HAYBALE/SANDBAG PROTECTION OR CATCH BASIN FILTER FOR PAVED AREAS SHALL BE PROVIDED FOR ALL DRAINAGE STRUCTURES WITHIN THE LIMIT OF WORK AND ANY STRUCTURES OUTSIDE THE PROJECT TERMINI THAT ARE AFFECTED BY CONSTRUCTION.

3 INLET SEDIMENT CONTROL

NOT TO SCALE

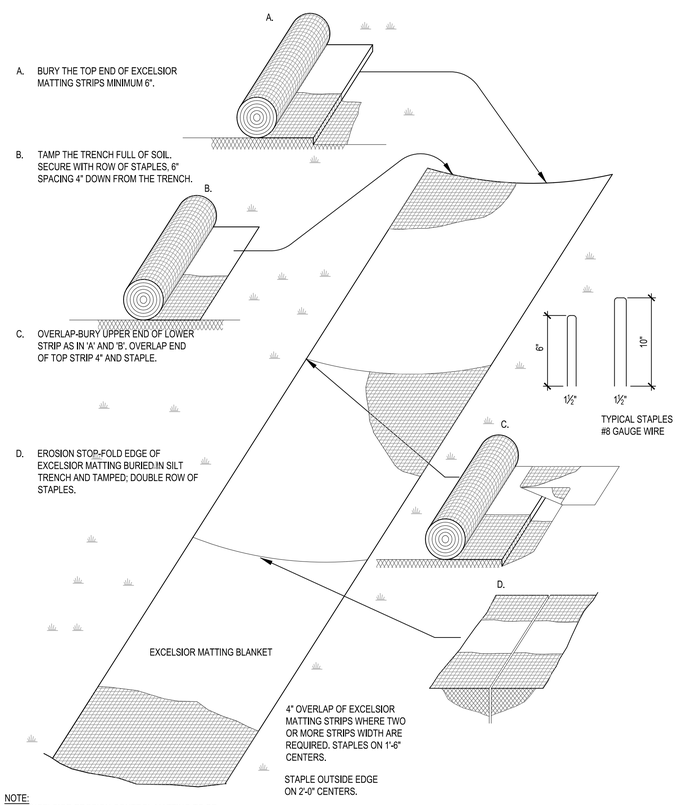

A. BURY THE TOP END OF EXCELSIOR MATTING STRIPS MINIMUM 6".

B. TAMP THE TRENCH FULL OF SOIL. SECURE WITH ROW OF STAPLES, 6" SPACING 4" DOWN FROM THE TRENCH.

C. OVERLAP-BURY UPPER END OF LOWER STRIP AS IN 'A' AND 'B'. OVERLAP END OF TOP STRIP 4" AND STAPLE.

D. EROSION STOP-FOLD EDGE OF EXCELSIOR MATTING BURIED IN SILT TRENCH AND TAMPED; DOUBLE ROW OF STAPLES.

NOTE:
1. EXCELSIOR EROSION CONTROL MATTING TO BE USED ON ALL SLOPES GREATER THAN 4H:1V AS INDICATED ON GRADING PLANS.

4 EROSION CONTROL BLANKET

NOT TO SCALE

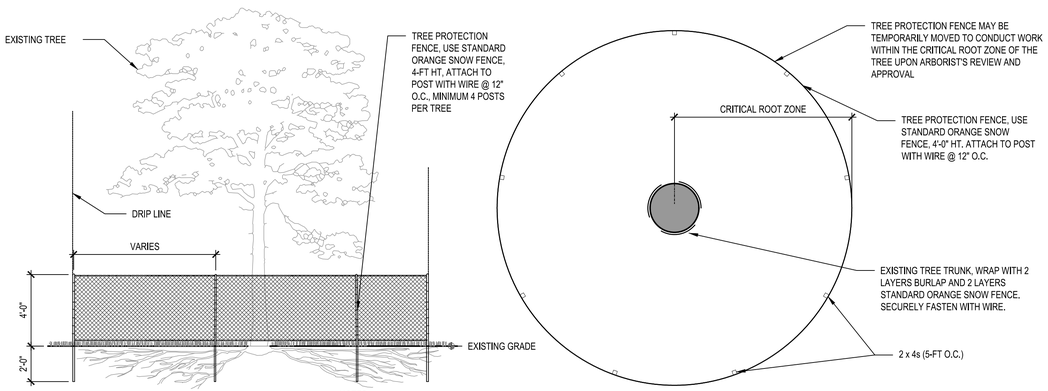

CRITICAL ROOT ZONE TO BE PROTECTED. ALL WORK NECESSARY WITHIN THE CRITICAL ROOT ZONE SHALL BE PERFORMED BY HAND.

NOTES:
1. WHERE SPACE IS AVAILABLE, TREE PROTECTION FENCE TO BE PLACED A MINIMUM OF 10' FROM BASE OF TREE PLUS AN ADDITIONAL 1' FOR EACH ADDITIONAL DBH FOR TREES GREATER THAN 10" DBH (DIA. AT BREAST HT.)
2. ALL WORK DONE WITHIN TREE PROTECTION FENCE IS TO BE DONE BY HAND AND LIGHT EQUIPMENT.
3. ROOTS EXPOSED DURING EXCAVATION SHALL BE NEATLY CUT AND COVERED WITH SOIL IMMEDIATELY.
4. FOR TREES THAT OCCUR IN GROUPS PROVIDE TREE PROTECTION FENCE AROUND ENTIRE AREA. SEE PLAN FOR LOCATIONS.
5. MAINTAIN FENCE PROTECTION IN SOUND CONDITION UNTIL COMPLETION OF CONSTRUCTION.
6. A CERTIFIED ARBORIST SHALL DELINEATE LIMIT OF TREE PROTECTION FENCE AS THEY RELATE TO THE LIMITS OF THE CRITICAL ROOT ZONE.

5 TREE PROTECTION, TYP.

NOT TO SCALE

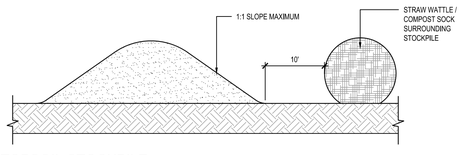

6 TOPSOIL STOCKPILE

NOT TO SCALE

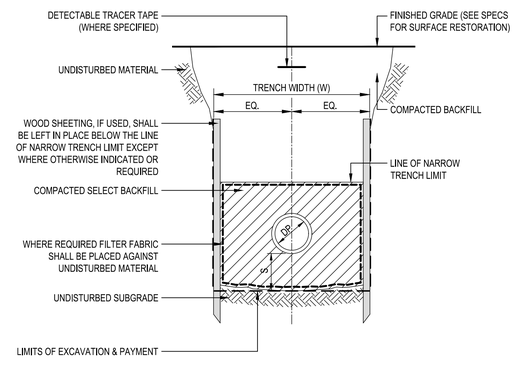

NOTES:
1. FOR W, DP, & S, SEE TABLE A.
2. AT DEAD-ENDED SEWER LINE LOCATIONS, INSTALL ONE (1) PRESSURE-TREATED 4X4 VERTICAL MARKER, BURIED 6 INCHES BELOW FINISHED GRADE, TO ASSIST WITH FUTURE IDENTIFICATION AND LOCATION OF SEWER PIPE.
3. SEWER LINES ARE GENERALLY DESIGNED WITH A MINIMUM OF 5 FEET OF COVER. WHERE A 4.5-FOOT MINIMUM COVER IS SHOWN, THIS CONDITION IS PROVIDED AT THE DIRECTION OF THE TOWN OF NANTUCKET DUE TO SITE SOIL CONDITIONS AND SHALL BE ACCEPTED BY THE AUTHORITY HAVING JURISDICTION.

DEPTH TO INVERT	DIAMETER OF PIPE (DP)	MAXIMUM TRENCH WIDTH BELOW LINE OF NARROW TRENCH LIMIT (SHEETED OR UNSHEETED) (W)	MINIMUM CLEARANCE (S)
0-12'	TO 18"	5'	6"

TABLE A

7 SEWER TRENCH - ADD ALTERNATE 2

NOT TO SCALE

Project:
TOWN OF NANTUCKET

NOBADEER ATHLETIC FIELDS IMPROVEMENTS

7 NOBADEER FARM ROAD

Weston & Sampson Engineers, Inc.
1 Washington Mall, 10th Floor
Boston, MA 02108
978.532.1900 800.SAMPSON
www.westonandsampson.com

Consultants:

Revisions:

No.	Date	Description

COA:

Seal:

Issued For:
BID DOCUMENTS

Scale: AS NOTED

Date: AUGUST 7, 2026
Drawn By:
Reviewed By:
Approved By:
W&S Project No.: ENG24-1207
W&S File No.:

Drawing Title:
SITE DETAILS

Sheet Number:
L800

COPYRIGHT © 2026 WESTON & SAMPSON, INC.

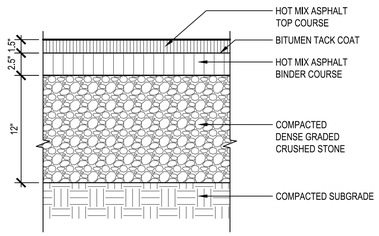

NOTE:
1. CONTRACTOR TO SAW-CUT, TACK COAT AND PROVIDE SMOOTH TRANSITION WHERE EXISTING PAVEMENT ABUTS NEW PAVEMENT.
2. ALL EDGES TO BE NEATLY TAMPED.

1 VEHICULAR ASPHALT PAVING
NOT TO SCALE

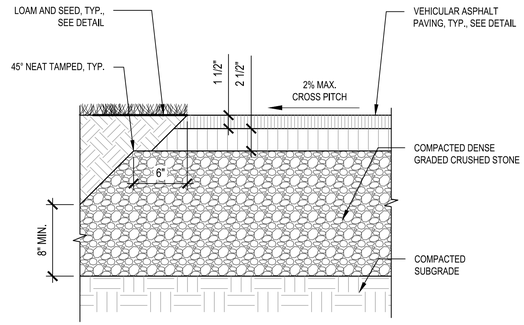

NOTES:
1. CONTRACTOR TO PROVIDE SMOOTH TRANSITION WHERE NEW PAVEMENT ABUTS EXISTING PAVEMENT, TYP.

2 HOT MIX ASPHALT AT LAWN
NOT TO SCALE

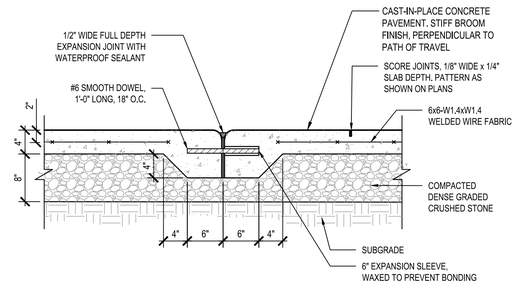

NOTE:
1. EXPANSION JOINT MAX. 25'-0" O.C., UNLESS SHOWN OTHERWISE.
2. SCORE JOINTS MAX. 5'-0" O.C., UNLESS SHOWN OTHERWISE.
3. DOWEL IS TYPICAL AT ALL EXPANSION JOINTS (18" O.C.) WITHIN CONCRETE PAVING, BETWEEN NEW CONCRETE PAVING AND EXISTING CONCRETE, AND BUILDING FOUNDATIONS.
4. ALL SCORE JOINTS SHALL BE SAW CUT.
5. PROVIDE PICTURE-FRAME EDGES TO MATCH EXISTING CONDITIONS. TOOL EDGE AT SCORE JOINTS. DO NOT TOOL EDGE AT EXPANSION JOINT

3 CAST-IN-PLACE CONCRETE PAVEMENT
NOT TO SCALE

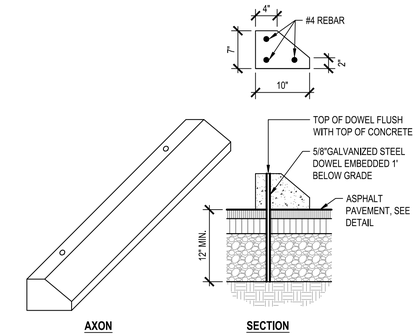

NOTES:
1. WHEEL STOPS SHALL BE PRECAST CONCRETE SINGLE FACE
2. DIMENSION SHALL BE 6'-0" LONG WITH (2) 5/8" DIA. GALVANIZED STEEL DOWELS.
3. REINFORCING STEEL DEFORMED BARS CONFORM TO THE LATEST ASTM SPECIFICATION A615.
4. MANUFACTURED TO MASSDOT SPECIFICATIONS.
5. ALL FINAL LOCATIONS ARE TO BE APPROVED IN THE FIELD BY THE ENGINEER.

4 CONCRETE WHEEL STOP
NOT TO SCALE

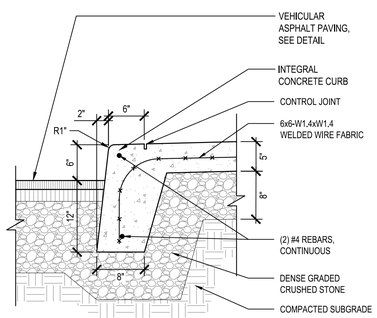

5 INTEGRAL VERTICAL CONCRETE CURB
NOT TO SCALE

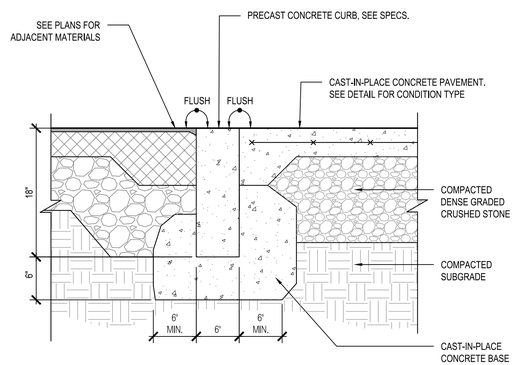

6 FLUSH PRECAST CONCRETE CURB
NOT TO SCALE

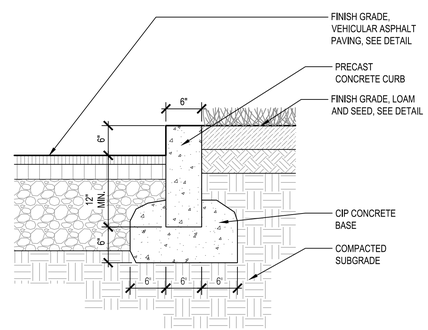

7 VERTICAL PRECAST CONCRETE CURB
NOT TO SCALE

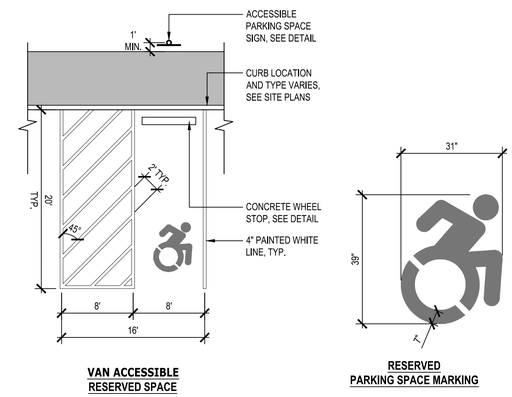

8 ACCESSIBLE PARKING SPACE LAYOUT
NOT TO SCALE

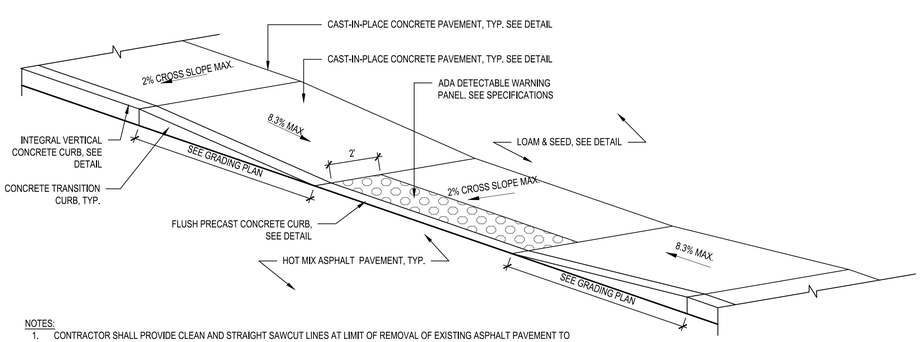

NOTES:
1. CONTRACTOR SHALL PROVIDE CLEAN AND STRAIGHT SAWCUT LINES AT LIMIT OF REMOVAL OF EXISTING ASPHALT PAVEMENT TO REMAIN. CONTRACTOR SHALL VERIFY LIMITS OF EXISTING ASPHALT PAVEMENT REMOVAL PRIOR TO COMMENCING DEMOLITION.
2. CONTRACTOR SHALL REMOVE AND REPLACE ASPHALT PAVEMENT, DENSE CRUSHED STONE, AND GRAVEL BORROW SUBGRADE NECESSARY TO CONSTRUCT A CLEAN, SMOOTH TRANSITION WHERE IT ABUTS EXISTING CONDITIONS.

9 ADA CURB CUT - TYPE A
NOT TO SCALE

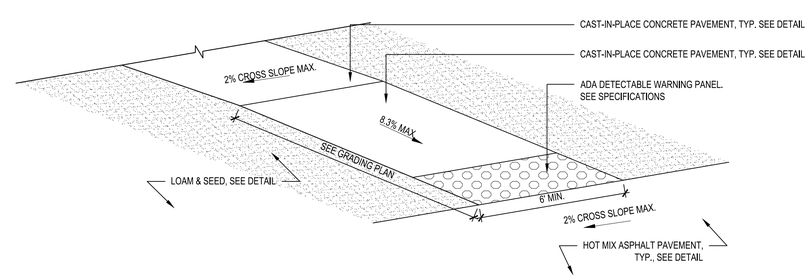

NOTES:
1. CONTRACTOR SHALL PROVIDE CLEAN AND STRAIGHT SAWCUT LINES AT LIMIT OF REMOVAL OF EXISTING ASPHALT PAVEMENT TO REMAIN. CONTRACTOR SHALL VERIFY LIMITS OF EXISTING ASPHALT PAVEMENT REMOVAL PRIOR TO COMMENCING DEMOLITION.
2. CONTRACTOR SHALL REMOVE AND REPLACE ASPHALT PAVEMENT, DENSE CRUSHED STONE, AND GRAVEL BORROW SUBGRADE NECESSARY TO CONSTRUCT A CLEAN, SMOOTH TRANSITION WHERE IT ABUTS EXISTING CONDITIONS.

10 ADA CURB CUT-TYPE B
NOT TO SCALE

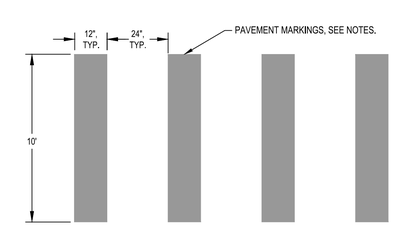

NOTE:
1. PROVIDE PAVEMENT MARKINGS WHERE SHOWN ON PLANS IN ACCORDANCE WITH THIS DETAIL.
2. CROSSWALK MARKINGS FOR NEW ROADWAYS SHALL BE INSTALLED USING EPOXY PAVING MARKING MATERIAL CONFORMING TO MASSDOT ENGINEERING DIRECTIVE E-05-003, DATED JUNE 16, 2005 AND TO MASSDOT STANDARD SECTION 860.

11 CROSSWALK PAVEMENT MARKINGS
NOT TO SCALE

Project:
TOWN OF NANTUCKET

NOBADEER ATHLETIC FIELDS IMPROVEMENTS

7 NOBADEER FARM ROAD

Weston & Sampson Engineers, Inc.
1 Washington Mall, 10th Floor
Boston, MA 02108
978.532.1900 800.SAMPSON
www.westonandsampson.com

Consultants:

Revisions:

No.	Date	Description

COA:

Seal:

Issued For:
BID DOCUMENTS

Scale: AS NOTED

Date: AUGUST 7, 2026
Drawn By:
Reviewed By:
Approved By:
W&S Project No.: ENG24-1207
W&S File No.:

Drawing Title:
SITE DETAILS

Sheet Number:
L801

COPYRIGHT © 2026 WESTON & SAMPSON, INC.

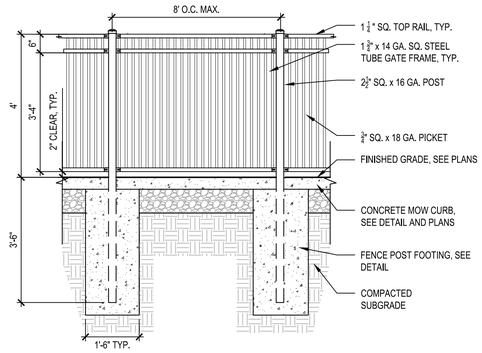

NOTES:
1. ALL MATERIALS FOR POST, RAILS AND PICKETS SHALL BE ZINC, HOT- DIPPED GALVANIZED STEEL. COLOR: BLACK
2. PLAYGROUND FENCING SHALL MEET ASTM STANDARDS.

1 4' HT. ORNAMENTAL FENCE

NOT TO SCALE

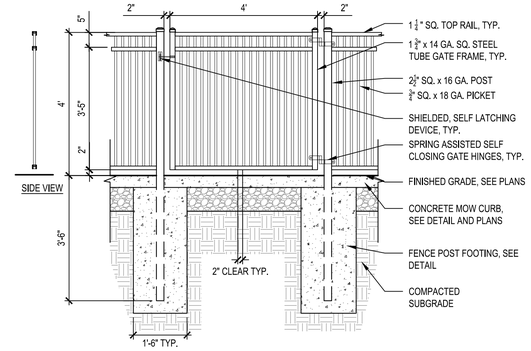

NOTES:
1. ALL MATERIALS FOR POST, RAILS AND PICKETS SHALL BE ZINC, HOT- DIPPED GALVANIZED STEEL. COLOR: BLACK
2. PLAYGROUND GATES SHALL MEET ASTM STANDARDS.
3. GATES AT PLAYGROUND TO OPEN OUTWARD AWAY FROM PLAY ENVIRONMENT, SHALL BE SELF CLOSING, AND SHALL HAVE A SELF-LATCHING DEVICE.

2 4' HT. ORNAMENTAL SINGLE SWING GATE

NOT TO SCALE

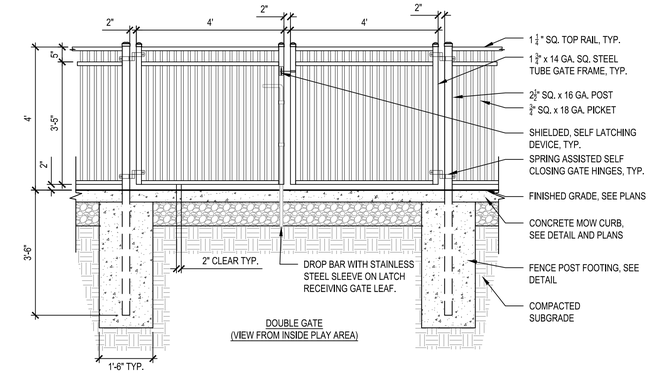

NOTES:
1. ALL MATERIALS FOR POST, RAILS AND PICKETS SHALL BE ZINC, HOT- DIPPED GALVANIZED STEEL. COLOR: BLACK
2. PLAYGROUND GATES SHALL MEET ASTM STANDARDS.
3. GATES AT PLAYGROUND TO OPEN OUTWARD AWAY FROM PLAY ENVIRONMENT, SHALL BE SELF CLOSING, AND SHALL HAVE A SELF-LATCHING DEVICE.

3 4' HT. ORNAMENTAL DOUBLE SWING GATE

NOT TO SCALE

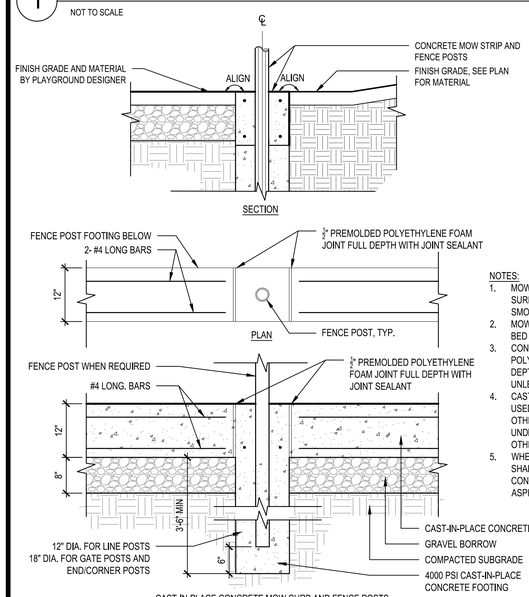

NOTES:
1. MOW CURB CORNERS ADJACENT TO RESILIENT SURFACING SHALL BE SQUARE TO ENSURE SMOOTH INTERFACE BETWEEN MATERIALS.
2. MOW CURB CORNERS ADJACENT TO PLANTING BED OR LAWN AREAS WILL HAVE 1/2" CHAMFER.
3. CONTRACTOR SHALL PROVIDE 1/2" PREMOLDED POLYETHYLENE FOAM EXPANSION JOINT, FULL DEPTH WITH SILICONE SEALANT EVERY 30' O.C. UNLESS OTHERWISE NOTED.
4. CAST-IN-PLACE CONCRETE FOOTING SHALL BE USED FOR ALL FENCE POSTS UNLESS NOTED OTHERWISE. POUR AGAINST UNDISTURBED/COMPACTED SUBGRADE UNLESS OTHERWISE NOTED.
5. WHEN LOCATED IN PAVED AREAS, FENCES SHALL BE OFFSET 6" FROM THE EDGE OF CONCRETE AND 12" FROM THE EDGE OF ASPHALT PAVING.

4 CAST-IN-PLACE CONCRETE MOW CURB AND FENCE POST

NOT TO SCALE

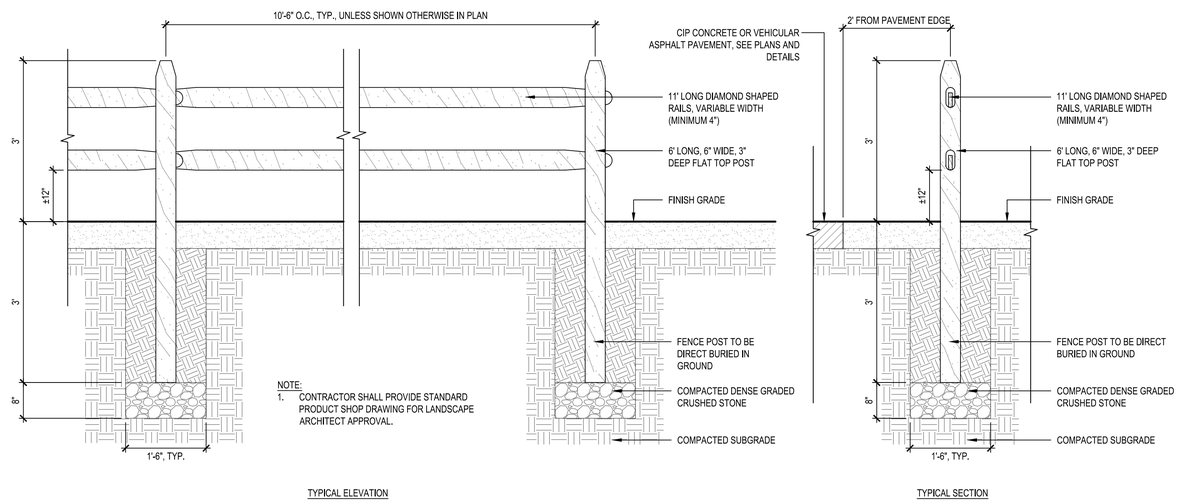

NOTE:
1. CONTRACTOR SHALL PROVIDE STANDARD PRODUCT SHOP DRAWING FOR LANDSCAPE ARCHITECT APPROVAL.

5 WOOD SPLIT RAIL FENCE, TYP.

NOT TO SCALE

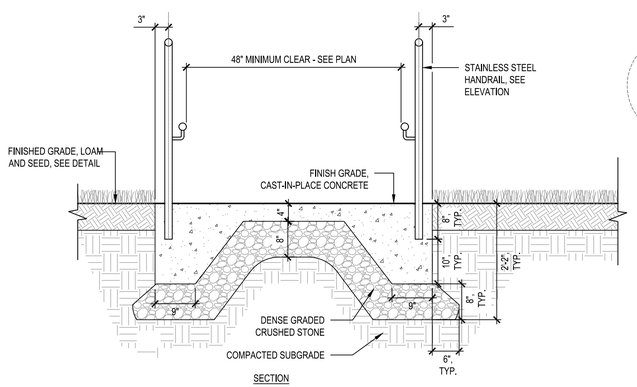

6 ADA RAMP WITH STAINLESS STEEL HANDRAIL AND LIGHTING

NOT TO SCALE

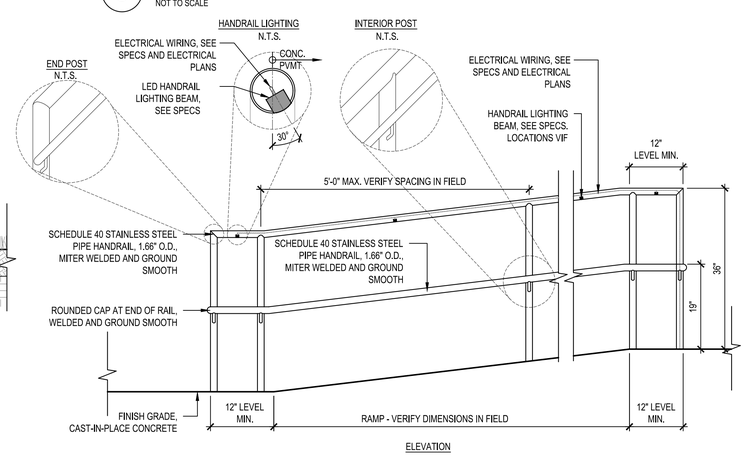

NOTES:
1. ALL HANDRAILS SHALL BE STAINLESS STEEL, BRUSHED FINISH.
2. HANDRAILS SHALL BE CORE DRILLED AND GROUTED.
3. ALL WELDS SHALL BE GROUND DOWN CLEAN AND SMOOTH.
4. ALL DIMENSIONS SHALL BE FIELD VERIFIED AND ADJUSTED AS NEEDED PRIOR TO FABRICATION.
5. CONTRACTOR SHALL SUBMIT LARGE SCALE SHOP DRAWINGS OF HANDRAILS PRIOR TO FABRICATION.
6. TOP OF UPPER HANDRAIL GRIPPING SURFACE SHALL BE 36 INCHES ABOVE THE RAMP SURFACE. TOP OF LOWER HANDRAIL GRIPPING SURFACE SHALL BE 19 INCHES ABOVE THE RAMP SURFACE.
7. SUBMIT HANDRAIL SHOP DRAWINGS AND STRUCTURAL CALCULATIONS SIGNED AND SEALED BY A PROFESSIONAL ENGINEER LICENSED IN MASSACHUSETTS. INCLUDE POST SPACING, EMBEDMENT, CONNECTIONS, CONCRETE EDGE DISTANCES, AND DESIGN LOAD CAPACITY IN ACCORDANCE WITH SECTION 05 50 00.
8. RAMPS SHALL MEET MASSACHUSETTS CODE 521 CMR 24.00 RAMPS. RAMP RUNNING SLOPE SHALL NOT EXCEED 1:12.

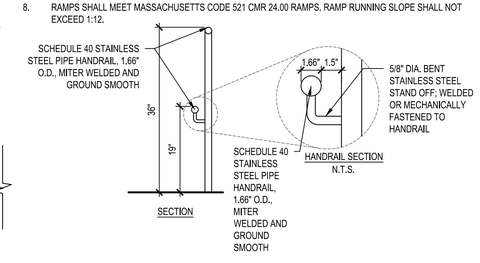

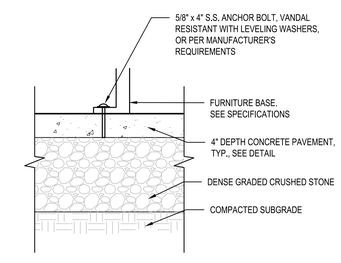

7 FURNITURE SURFACE MOUNT

NOT TO SCALE

Project:
TOWN OF NANTUCKET

NOBADEER ATHLETIC FIELDS IMPROVEMENTS

7 NOBADEER FARM ROAD

Weston & Sampson Engineers, Inc.
1 Washington Mall, 10th Floor
Boston, MA 02108
978.532.1900 800.SAMPSON
www.westonandsampson.com

Consultants:

Revisions:

No.	Date	Description

COA:

Seal:

Issued For:
BID DOCUMENTS

Scale: AS NOTED

Date: AUGUST 7, 2026
Drawn By:
Reviewed By:
Approved By:
W&S Project No.: ENG24-1207
W&S File No.:

Drawing Title:
SITE DETAILS

Sheet Number:
L802

COPYRIGHT © 2026 WESTON & SAMPSON, INC.

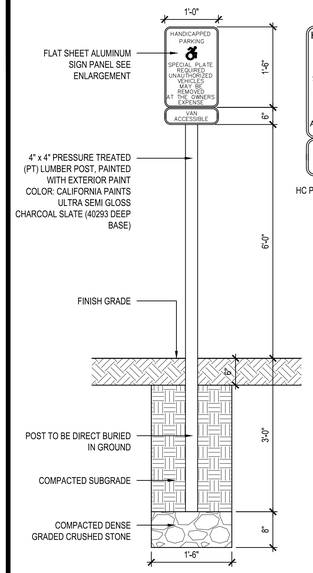

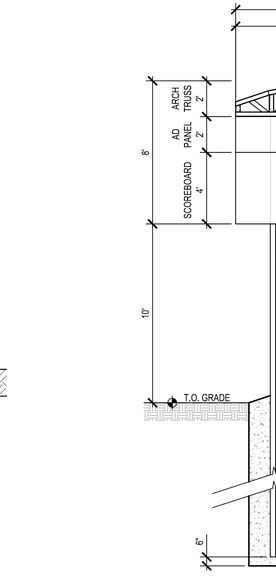

HC PARKING SPACE SIGN

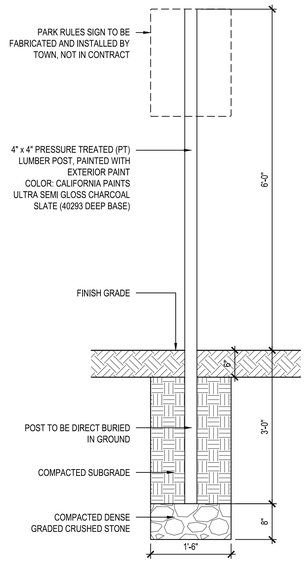

1 ACCESSIBLE PARKING SPACE SIGN

NOT TO SCALE

2 PARK RULES SIGN POST

NOT TO SCALE

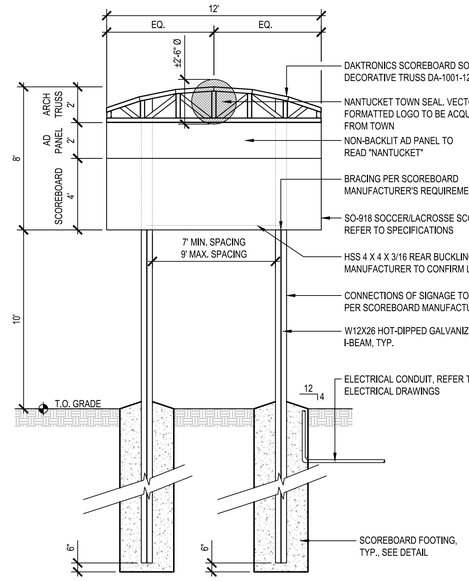

NOTES:

1. PROVIDE STRUCTURAL STEEL POSTS HOT-DIP GALVANIZED AFTER FABRICATION. FOLLOWING GALVANIZATION, CLEAN AND PREPARE SURFACES PER COATING MANUFACTURER RECOMMENDATIONS AND APPLY A SHOP-APPLIED BLACK POLYURETHANE COATING SYSTEM COMPATIBLE WITH GALVANIZED SUBSTRATES.
2. ALL ASSOCIATED FASTENERS AND HARDWARE SHALL BE HOT-DIP GALVANIZED OR STAINLESS STEEL, SUITABLE FOR COASTAL ENVIRONMENT.
3. CONTRACTOR SHALL COORDINATE FINAL DIMENSIONS, WEIGHTS, AND CLEARANCES WITH DAKTRONICS SHOP DRAWINGS PRIOR TO FABRICATION AND INSTALLATION.
4. SCOREBOARD FOUNDATION, FOOTINGS, AND ANCHORAGE SHALL BE DESIGNED AND STAMPED BY A MASSACHUSETTS-LICENSED STRUCTURAL ENGINEER BASED ON FINAL SCOREBOARD CONFIGURATION AND SITE CONDITIONS.
5. INSTALLATION SHALL COMPLY WITH DAKTRONICS REQUIREMENTS, MANUFACTURER INSTALLATION MANUALS, AND ALL APPLICABLE CODES.
6. PROVIDE ELECTRICAL POWER, DATA, AND GROUNDING AS REQUIRED BY DAKTRONICS. COORDINATE CONDUIT ROUTING AND STUB-UPS WITH ELECTRICAL DRAWINGS.
7. SCOREBOARD RENDERING IS FOR GRAPHIC REFERENCE ONLY:

FINAL COLORS, GRAPHICS, AND LOGOS SHALL BE APPROVED BY OWNER DURING SHOP DRAWING REVIEW.

3 SCOREBOARD - ADD ALTERNATE 1

NOT TO SCALE

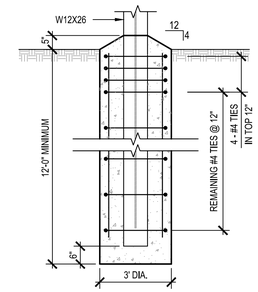

SECTION

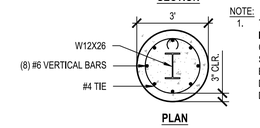

PLAN

NOTE:

1. THIS DRAWING IS FOR INFORMATION PURPOSES ONLY. CONTRACTOR SHALL SUPPLY STAMPED ENGINEERED SHOP DRAWINGS FOR FOOTING DESIGN.

4 SCOREBOARD FOOTING - ADD ALTERNATE 1

NOT TO SCALE

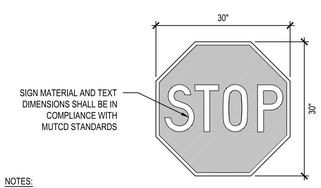

NOTES:

1. THE MINIMUM MOUNTING HEIGHT OF POST-MOUNTED SIGNS, MEASURED VERTICALLY FROM THE BOTTOM OF THE LOWEST SIGN TO THE TOP OF THE CURB OR SIDEWALK, OR TO THE ELEVATION OF THE NEAR EDGE OF THE TRAVELED WAY, SHALL BE 7 FEET UNLESS OTHERWISE SPECIFIED ON THE PLANS.
2. ALL SIGN POSTS SHALL BE 4" x 4" PRESSURE TREATED (PT) LUMBER POST, PAINTED WITH EXTERIOR PAINT, COLOR: CALIFORNIA PAINTS ULTRA SEMI GLOSS CHARCOAL SLATE (40293 DEEP BASE), OR APPROVED EQUAL.

5 STOP SIGN

NOT TO SCALE

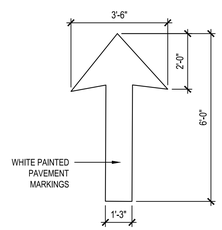

PLAN - DIRECTION ARROWS

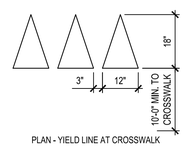

PLAN - YIELD LINE AT CROSSWALK

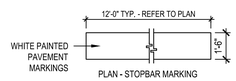

PLAN - STOPBAR MARKING

NOTE:

1. PROVIDE PAVEMENT MARKINGS WHERE SHOWN ON PLANS IN ACCORDANCE WITH THIS DETAIL.
2. PAVEMENT MARKINGS SHALL BE WHITE, REFLECTORIZED TRAFFIC PAINT CONFORMING TO FEDERAL SPECIFICATION TTP-1952B TRAFFIC PAINT, TYPE I OR II.

6 TRAFFIC PAVEMENT MARKINGS

NOT TO SCALE

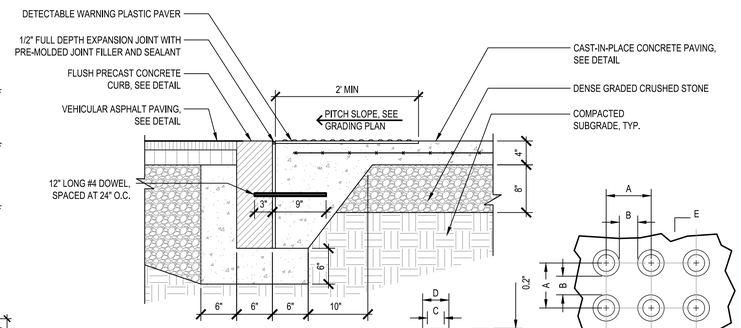

TRUNCATED DOME DIMENSIONS

DIM.	MIN. (IN)	MAX. (IN)
A	1.60"	2.40"
B	0.65"	1.50"
C	50% - 65% OF D DIM.	
D	0.90"	1.40"

SECTION E-E **PLAN**

DETECTABLE WARNING SURFACE

7 DETECTABLE WARNING SURFACE

NOT TO SCALE

REPRESENTATIVE EXISTING SITE STRUCTURES SHOWN FOR ARCHITECTURAL REFERENCE

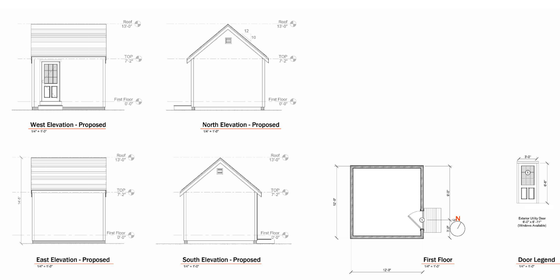

REPRESENTATIVE UTILITY SHED ELEVATIONS SHOWN FOR ARCHITECTURAL REFERENCE

UTILITY SHED NOTES

1. FOUNDATION SHALL CONSIST OF CAST-IN-PLACE CONCRETE SONOTUBE PIERS, 8" DIAMETER MINIMUM AND 48" DEPTH MINIMUM, OR AS REQUIRED TO EXTEND BELOW LOCAL FROST DEPTH. PROVIDE TWO (2) ROWS OF THREE (3) PIERS, WITH ONE ROW BENEATH EACH 6x6 PRESSURE-TREATED TIMBER, UNLESS NOTED OTHERWISE IN APPROVED SHOP DRAWINGS.
2. 6x6 PRESSURE-TREATED TIMBERS SHALL BE SUPPORTED ON CONCRETE PIERS USING EMBEDDED, UPLIFT-RATED POST BASE CONNECTORS (SIMPSON STRONG-TIE PBS, ABU, OR APPROVED EQUIVALENT), PROVIDE MINIMUM 1" STANDOFF BETWEEN CONCRETE AND WOOD. SURFACE-SET ANCHORS ARE NOT PERMITTED.
3. ALL CONNECTIONS AND ANCHORAGE SHALL BE DESIGNED TO RESIST REQUIRED GRAVITY, LATERAL, AND UPLIFT LOADS FOR EXPOSURE C WIND CONDITIONS IN ACCORDANCE WITH 780 CMR AND NANTUCKET REQUIREMENTS.
4. PROVIDE 6" MINIMUM COMPACTED CRUSHED STONE PAD (3/4" CRUSHED STONE) BENEATH SHED, EXTENDING FULL FOOTPRINT OF STRUCTURE PLUS 12" MINIMUM BEYOND PERIMETER. COMPACT STONE TO 95% MODIFIED PROCTOR.
5. INSTALL NON-WOVEN GEOTEXTILE FABRIC BENEATH CRUSHED STONE PAD AND TURN UP EDGES A MINIMUM OF 6" AT PERIMETER.
6. FINISHED GRADE AND STONE PAD SHALL SLOPE AWAY FROM SHED A MINIMUM OF 1.5% FOR POSITIVE DRAINAGE.
7. SHED FLOOR FRAMING SHALL BEAR FULLY ON 6x6 PRESSURE-TREATED TIMBERS. SHED SHALL NOT BEAR DIRECTLY ON GRADE OR ON CRUSHED STONE. SKID-BASED, FLOATING, OR GRADE-SUPPORTED INSTALLATIONS ARE NOT PERMITTED.
8. PROVIDE MINIMUM 6" CLEARANCE BETWEEN FINISHED GRADE AND BOTTOM OF SHED FLOOR FRAMING UNLESS OTHERWISE APPROVED.
9. ALL PRESSURE-TREATED WOOD SHALL BE RATED FOR GROUND CONTACT WHERE APPLICABLE AND COMPATIBLE WITH METAL CONNECTORS.
10. FINAL PIER SIZES, SPACING, CONNECTOR SELECTION, AND ANCHORAGE DETAILS SHALL MATCH APPROVED SHOP DRAWINGS AND SECTION 11 99 00. DETAIL SHOWN IS DIAGRAMMATIC AND INTENDED TO CLARIFY DESIGN INTENT.

8 PROPOSED UTILITY SHED

NOT TO SCALE

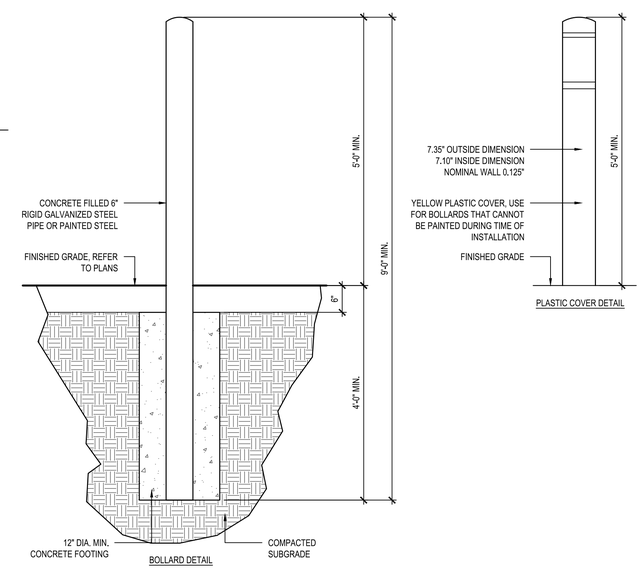

BOLLARD DETAIL

PLASTIC COVER DETAIL

9 UTILITY BOLLARD

NOT TO SCALE

Project:

TOWN OF NANTUCKET

NOBADEER ATHLETIC FIELDS IMPROVEMENTS

7 NOBADEER FARM ROAD

Weston & Sampson Engineers, Inc.
1 Washington Mall, 10th Floor
Boston, MA 02108
978.532.1900 800.SAMPSON
www.westonandsampson.com

Consultants:

Revisions:

No.	Date	Description

COA:

Seal:

Issued For:

BID DOCUMENTS

Scale: AS NOTED

Date: AUGUST 7, 2026

Drawn By:

Reviewed By:

Approved By:

W&S Project No.: ENG24-1207

W&S File No.:

Drawing Title:

SITE DETAILS

Sheet Number:

L803

COPYRIGHT © 2026 WESTON & SAMPSON, INC.

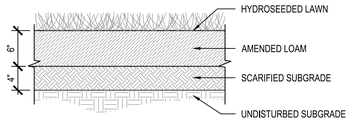

1 LOAM AND SEED, TYP.

NOT TO SCALE

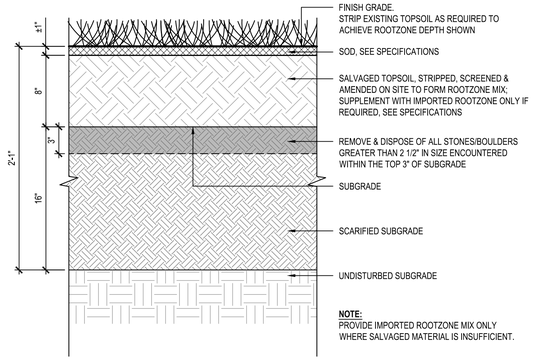

2 SODDED ATHLETIC FIELD

NOT TO SCALE

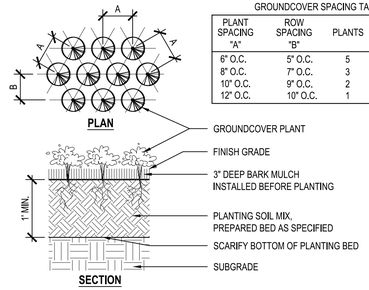

GROUNDCOVER SPACING TABLE

PLANT SPACING "A"	ROW SPACING "B"	PLANTS	AREA UNIT
6" O.C.	5" O.C.	5	1 SQ. FT.
8" O.C.	7" O.C.	3	1 SQ. FT.
10" O.C.	9" O.C.	2	1 SQ. FT.
12" O.C.	10" O.C.	1	1 SQ. FT.

NOTES:
1. ALL GROUNDCOVER TO BE PLANTED IN TRIANGULAR PATTERN. SEE DETAIL PLAN AND GROUNDCOVER SPACING TABLE.
2. EXCELSIOR EROSION CONTROL MATTING TO BE USED ON ALL SLOPES GREATER THAN 4:1.

3 GROUNDCOVER PLANTING

NOT TO SCALE

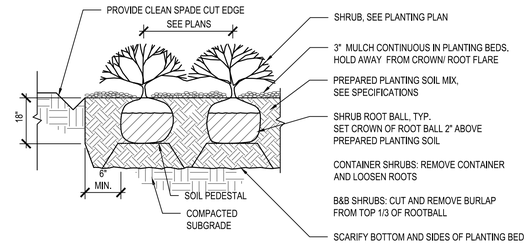

4 SHRUB PLANTING

NOT TO SCALE

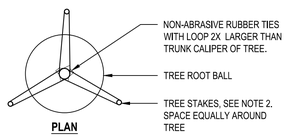

NOTES:
1. CONTRACTOR SHALL KEEP TREES UPRIGHT AND PLUMB. DO NOT STAKE TREES UNLESS REQUIRED FOR STABILITY OR AS DIRECTED BY THE LANDSCAPE ARCHITECT.
2. WHERE STAKING IS REQUIRED, PROVIDE:
   - 2.1. 3" CAL. OR LESS – 2 STAKES MINIMUM
   - 2.2. GREATER THAN 3" CAL. – 3 STAKES MINIMUM
   - 2.3. SPACE STAKES EQUALLY AROUND TREE.
3. REMOVE ALL STAKES AND TIES AT THE END OF THE FIRST GROWING SEASON, UNLESS OTHERWISE DIRECTED BY THE LANDSCAPE ARCHITECT.

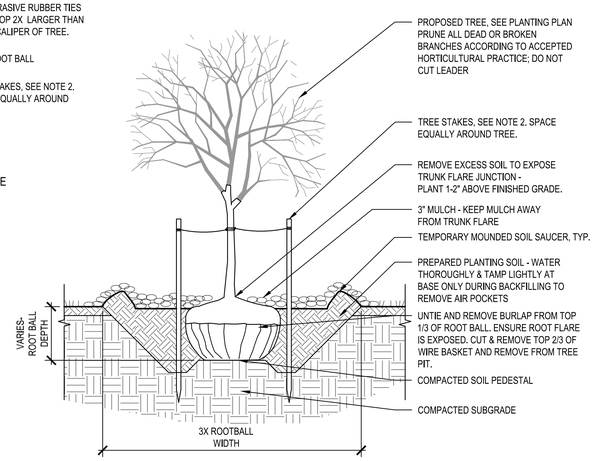

5 DECIDUOUS TREE PLANTING, TYP.

NOT TO SCALE

Project:
TOWN OF NANTUCKET

NOBADEER ATHLETIC FIELDS IMPROVEMENTS

7 NOBADEER FARM ROAD

Weston & Sampson Engineers, Inc.
1 Washington Mall, 10th Floor
Boston, MA 02108
978.532.1900 800.SAMPSON
www.westonandsampson.com

Consultants:

Revisions:

No.	Date	Description

COA:

Seal:

Issued For:
BID DOCUMENTS

Scale: AS NOTED

Date: AUGUST 7, 2026
Drawn By:
Reviewed By:
Approved By:

W&S Project No.: ENG24-1207
W&S File No.:

Drawing Title:
SITE DETAILS

Sheet Number:
L804

COPYRIGHT © 2026 WESTON & SAMPSON, INC.

Nobadeer Fields
Nantucket, MA

Grid Summary

Name:	Soccer 1 Spill @ 3ft.
Spacing:	30.0'
Height:	3.0' above grade

Illumination Summary

INITIAL HORIZONTAL FOOTCANDLES

	Entire Grid
Scan Average:	0.0011
Maximum:	0.01
Minimum:	0.00
CU:	0.00
No. of Points:	71
FIXTURE INFORMATION	
Applied Circuits:	A
No. of Fixtures:	28
Total Load:	28.88 kW

Guaranteed Performance: The ILLUMINATION described above is guaranteed per your Musco Warranty document.

Field Measurements: Individual field measurements may vary from computer-calculated predictions.

Electrical System Requirements: Refer to Amperage Draw Chart and/or the **"Musco Control System Summary"** for electrical sizing.

Installation Requirements: Results assume ± 3% nominal voltage at line side of the driver and structures located within 3 feet (1m) of design locations.

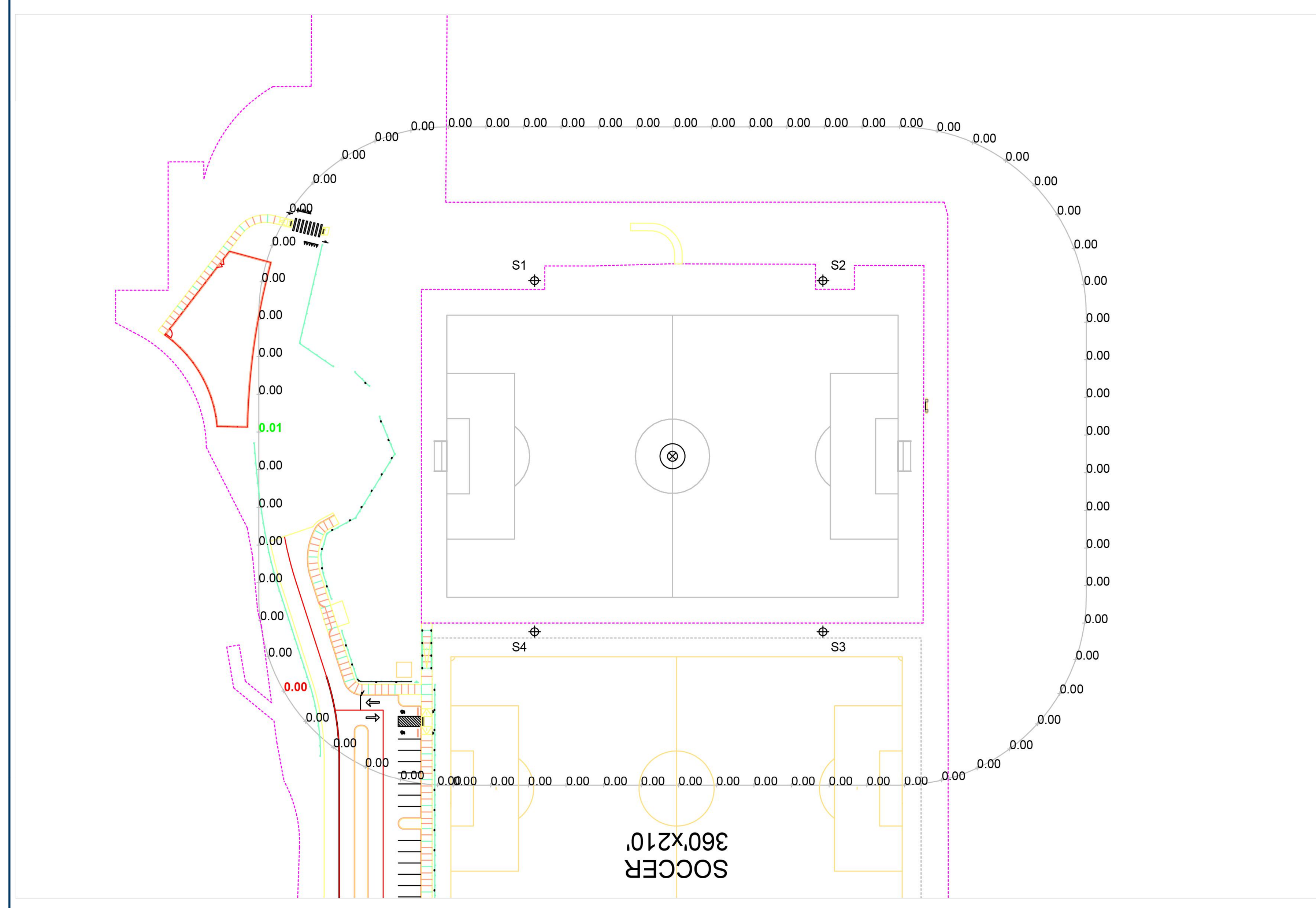

SCALE IN FEET 1 : 80
0' 80' 160'

Pole location(s) dimensions are relative to 0,0 reference point(s)

ENGINEERED DESIGN By: T.Lanphier • File #240917C • 18-Dec-25

Not to be reproduced in whole or part without the written consent of Musco Sports Lighting, LLC.
©1981, 2025 Musco Sports Lighting, LLC.

ILLUMINATION SUMMARY

Nobadeer Fields
Nantucket, MA

LIGHTING SYSTEM

Structure/Fixture Summary

Structure ID	Structure Height	Fixt. Attachment Ht.	Fixture Qty	Fixture Type	Load	Circuit
S1-S2	80'	80'	2	FUTURE	2.82 kW	B
		80'	2	TLC-LED-1500	2.82 kW	A
		80'	5	FUTURE	4.40 kW	B
		80'	5	TLC-LED-900	4.40 kW	A
S3-S4	70'	70'	2	FUTURE	2.82 kW	C
		70'	2	TLC-LED-1500	2.82 kW	A
		70'	5	FUTURE	4.40 kW	C
		70'	5	TLC-LED-900	4.40 kW	A
4			56		57.76 kW	

Circuit Summary

Circuit	Description	Load	Fixture Qty
A	Soccer 1	28.88 kW	28
B	Future Soccer	14.44 kW	14
C	Future Soccer	14.44 kW	14

Fixture Type Summary

Type	Circuit	Source	Wattage	Lumens	L90	L80	L70	Quantity
TLC-LED-1500	A	LED 5700K - 75 CRI	1410W	181,000	>120,000	>120,000	>120,000	8
TLC-LED-900	A	LED 5700K - 75 CRI	880W	104,000	>120,000	>120,000	>120,000	20

Single Fixture Amperage Draw Chart

Driver Specifications (.90 min power factor)	Line Amperage Per Fixture (max draw)						
Single Phase Voltage	208 (60)	220 (60)	240 (60)	277 (60)	347 (60)	380 (60)	480 (60)
TLC-LED-1500	8.4	7.9	7.3	6.3	5.0	4.6	3.6
TLC-LED-900	5.2	4.9	4.5	3.9	3.1	2.9	2.3

Light Level Summary

Calculation Grid Summary

Grid Name	Calculation Metric	Illumination Ave	Min	Max	Max/Min	Ave/Min	Circuits	Fixture Qty
Soccer 1	Horizontal Illuminance	34.51	27	44	1.67	1.30	A	28
Soccer 1 Spill @ 3ft.	Horizontal Illuminance	0.0011	0.00	0.01	-	-	A	28
Soccer 1 Spill @ 5ft.	Max Candela Metric	172.0347	0.00	612.49	-	-	A	28
Soccer 1 Spill @ 5ft.	Max Vertical Illuminance Metric	0.0028	0.00	0.01	-	-	A	28

Guaranteed Performance: The ILLUMINATION described above is guaranteed per your Musco Warranty document.

Field Measurements: Individual field measurements may vary from computer-calculated predictions.

Electrical System Requirements: Refer to Amperage Draw Chart and/or the **"Musco Control System Summary"** for electrical sizing.

Installation Requirements: Results assume ± 3% nominal voltage at line side of the driver and structures located within 3 feet (1m) of design locations.

ENGINEERED DESIGN By: T.Lanphier • File #240917C • 18-Dec-25

Not to be reproduced in whole or part without the written consent of Musco Sports Lighting, LLC.
©1981, 2025 Musco Sports Lighting, LLC.

PROJECT SUMMARY

ADD ALTERNATE 4 - GENERAL NOTE:

MANUFACTURER INFORMATION INCLUDED FOR REFERENCE / BASIS OF DESIGN

Equipment List For Areas Shown

QTY	STRUCTURE ID	SIZE	GRADE ELEVATION	ABOVE FIELD LEVEL	FIXTURE TYPE	QTY/POLE	THIS GRID	OTHER GRIDS
2	S1-S2	80'	-	80'	TLC-LED-1500	2/2*	2	2
				80'	TLC-LED-900	5/5*	5	5
2	S3-S4	70'	-	70'	TLC-LED-1500	2/2*	2	2
				70'	TLC-LED-900	5/5*	5	5
4	Totals					56	28	28

Above Field Level is height of fixtures above area shown

*This structure utilizes a back-to-back mounting configuration

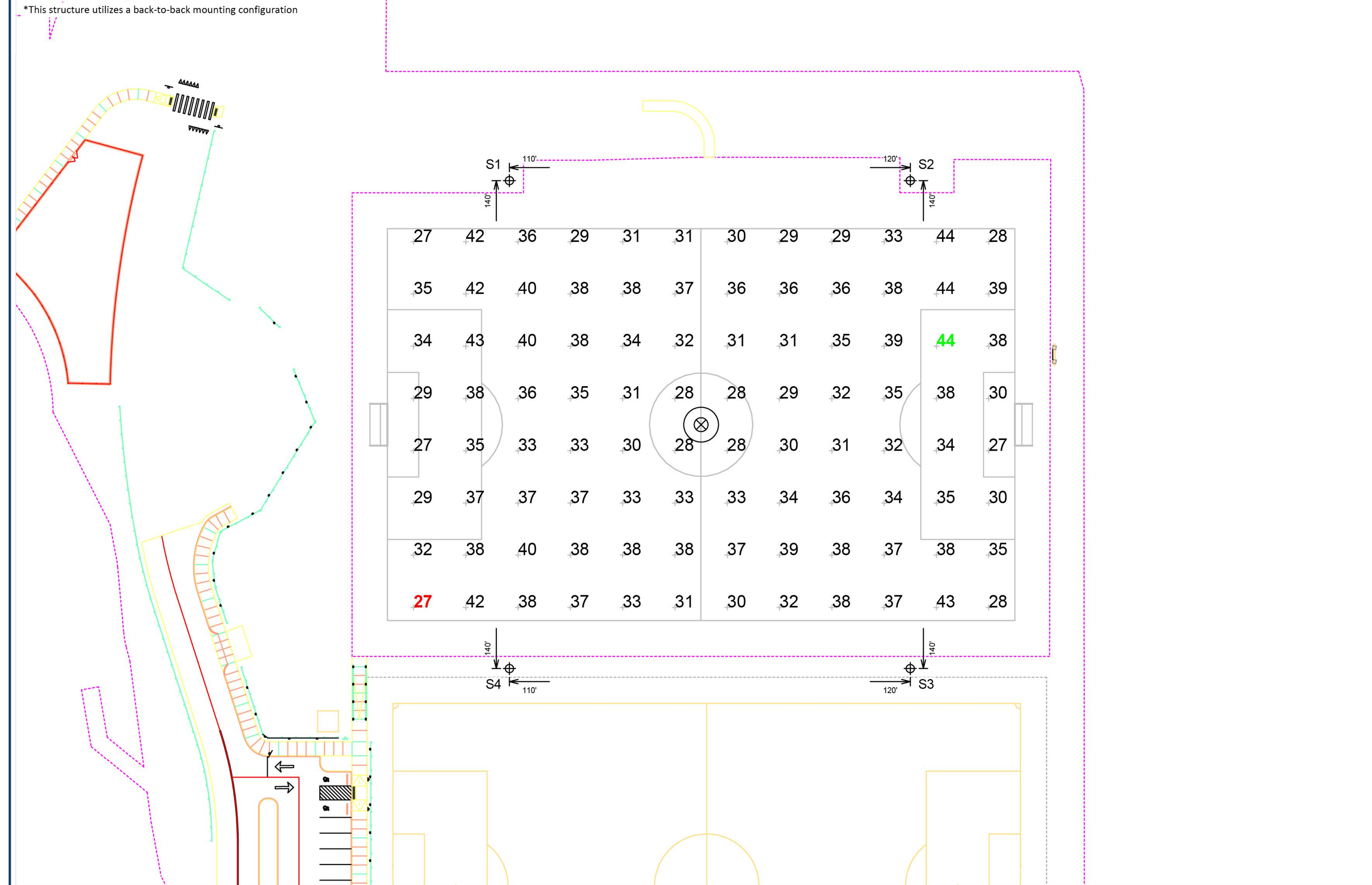

SCALE IN FEET 1 : 60
0' 60' 120'

Pole location(s) dimensions are relative to 0,0 reference point(s)

ENGINEERED DESIGN By: T.Lanphier • File #240917C • 18-Dec-25

Nobadeer Fields
Nantucket, MA

Grid Summary

Name:	Soccer 1
Size:	360' x 225'
Spacing:	30.0' x 30.0'
Height:	3.0' above grade

Illumination Summary

MAINTAINED HORIZONTAL FOOTCANDLES

	Entire Grid
Guaranteed Average:	30
Scan Average:	34.51
Maximum:	44
Minimum:	27
Avg/Min:	1.30
Guaranteed Max/Min:	2.5
Max/Min:	1.67
UG (adjacent pts):	1.59
CU:	0.84
No. of Points:	96
FIXTURE INFORMATION	
Applied Circuits:	A
No. of Fixtures:	28
Total Load:	28.88 kW

Guaranteed Performance: The ILLUMINATION described above is guaranteed per your Musco Warranty document.

Field Measurements: Individual field measurements may vary from computer-calculated predictions.

Electrical System Requirements: Refer to Amperage Draw Chart and/or the **"Musco Control System Summary"** for electrical sizing.

Installation Requirements: Results assume ± 3% nominal voltage at line side of the driver and structures located within 3 feet (1m) of design locations.

Not to be reproduced in whole or part without the written consent of Musco Sports Lighting, LLC.
©1981, 2025 Musco Sports Lighting, LLC.

ILLUMINATION SUMMARY

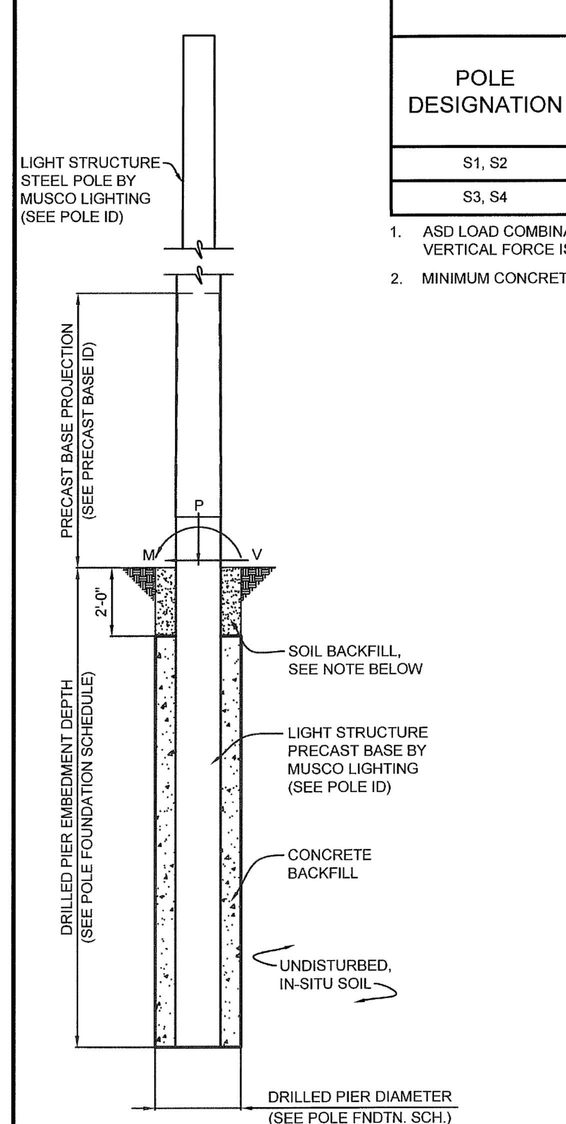

POLE FOUNDATION ELEV.
SCALE: NOT TO SCALE

SOIL BACKFILL NOTE:
THE TOP TWO FEET OF ANNULUS SHALL BE BACKFILLED WITH SOIL, WITH A CLASSIFICATION OF CLASS 5 (TABLE 1806.2) OR BETTER. COMPACTION, 95% FOR COHESIVE SOIL AND 98% FOR A COHESIONLESS SOIL BASED UPON STANDARD PROCTOR TESTING (ASTM D698).

POLE FOUNDATION SCHEDULE

POLE DESIGNATION	FORCES (1.) MOMENT (M) FT-LBS	SHEAR (V) LBS	VERTICAL (P) LBS	DRILLED PIER DIAMETER INCHES	EMBEDMENT DEPTH	CONCRETE BACKFILL YD^3 (2.)
S1, S2	224,544	4,183	5,822	36	20'-0"	2.7
S3, S4	167,561	3,407	3,990	30	18'-0"	1.6

1. ASD LOAD COMBINATION D + 0.6W. VERTICAL FORCE IS WEIGHT OF DRESSED POLE (DOES NOT INCLUDE PRECAST BASE WEIGHT).
2. MINIMUM CONCRETE BACKFILL VOLUME, SITE CONDITIONS MAY REQUIRE ADDITIONAL BACKFILL.

PRECAST BASE IDENTIFICATION

PRECAST BASE TYPE	PRECAST BASE WEIGHT	PRECAST BASE LENGTH	PROJECTION ABOVE GRADE	STANDARD EMBEDMENT	OUTSIDE DIAMETER
6B	6,930 LBS	26'-1"	8'-1"	18'-0"	20.56"
7B	10,160 LBS	27'-10"	7'-10"	20'-0"	23.75"

POLE IDENTIFICATION

POLE DESIGNATION	POLE TYPE	PRECAST BASE TYPE	FIXTURE CONFIGURATION (FIX. PER XARM)	FIXTURE AND ACCESSORIES EPA (FT^2)
S1, S2	LSS80D	7B	14 (7) / (7)	36.3
S3, S4	LSS70E	6B	14 (7) / (7)	34.9

DESIGN NOTES

DESIGN PARAMETERS:
WIND: V = 137 MPH, V_{asd} = 106 MPH (EXPOSURE C, RISK CATEGORY II) PER MASSACHUSETTS STATE BUILDING CODE - 780 CMR, 10TH EDITION (IBC 2021 / ASCE 7-16).

GEOTECHNICAL PARAMETERS:
ALLOWABLE END BEARING SOIL PRESSURE: 4,000 PSF
LATERAL SOIL RESISTANCE PARAMETERS:
UNIT WEIGHT = 120 PCF; FRICTION ANGLE = 30° (NEGLECT TOP 2'-0")
IN ACCORDANCE WITH MASSACHUSETTS STATE BUILDING CODE - 780 CMR, 10TH ED., CHAPTER 18.

DESIGN SOIL PARAMETERS ARE AS NOTED. ACTUAL ALLOWABLE SOIL PARAMETERS MUST BE VERIFIED ON SITE. REFERENCE GEOTECHNICAL MEMORANDUM (2/12/2025), PREPARED BY WESTON & SAMPSON; READING, MA.

A GEOTECHNICAL ENGINEER OR REPRESENTATIVE OF IS RECOMMENDED (NOT REQUIRED) TO BE AVAILABLE AT THE TIME OF THE FOUNDATION INSTALLATION TO VERIFY THE SOIL DESIGN PARAMETERS AND TO PROVIDE ASSISTANCE IF ANY PROBLEMS ARISE IN FOUNDATION INSTALLATION.

ENCOUNTERING SOIL FORMATIONS THAT WILL REQUIRE SPECIAL DESIGN CONSIDERATIONS OR EXCAVATION PROCEDURES MAY OCCUR. POLE FOUNDATIONS WILL NEED TO BE ANALYZED ACCORDING TO THE SOIL CONDITIONS THAT EXIST. IF ANY DISCREPANCIES OR INCONSISTENCIES ARISE, NOTIFY THE ENGINEER OF SUCH DISCREPANCIES. FOUNDATIONS WILL THEN BE REVISED ACCORDINGLY. REVISIONS WILL BE ANALYZED PER RECOMMENDATIONS DIRECTED BY A REGISTERED ENGINEER.

ALL EXCAVATIONS MUST BE FREE OF LOOSE SOIL AND DEBRIS PRIOR TO FOUNDATION INSTALLATION AND CONCRETE BACKFILL PLACEMENT. TEMPORARY CASINGS OR DRILLERS SLURRY MAY BE USED TO STABILIZE THE EXCAVATION DURING INSTALLATION. CASINGS MUST BE REMOVED DURING CONCRETE BACKFILL PLACEMENT. CONCRETE BACKFILL MUST BE PLACED WITH A TREMIE WHEN SLURRY OR WATER IS PRESENT WITHIN THE EXCAVATION.

CONTRACTOR MUST BE FAMILIAR WITH THE COMPLETE SOIL INVESTIGATION REPORT AND BORINGS, AND CONTACT THE GEOTECHNICAL FIRM (IF NECESSARY) TO UNDERSTAND THE SOIL CONDITIONS AND THE POSSIBILITY OF GROUND WATER PUMPING AND EXCAVATION STABILIZATION OR BRACING DURING PRECAST BASE INSTALLATION AND PLACEMENT OF CONCRETE BACKFILL.

CONCRETE:
CONCRETE SHALL BE AIR-ENTRAINED AND HAVE A MINIMUM COMPRESSIVE DESIGN STRENGTH AT 28 DAYS OF 3,000 PSI. 3,000 PSI CONCRETE SPECIFIED FOR EARLY POLE ERECTION, ACTUAL REQUIRED MINIMUM ALLOWABLE CONCRETE STRENGTH IS 1,000 PSI. ALL PIERS AND CONCRETE BACKFILL MUST BEAR ON AND AGAINST FIRM UNDISTURBED SOIL.

GENERAL NOTES:
FIXTURES MUST BE LOCATED TO MAINTAIN 10'-0" MINIMUM HORIZONTAL CLEARANCE FROM ANY OBSTRUCTION. ENGINEER MUST BE NOTIFIED IF FOUNDATIONS ARE NEAR ANY RETAINING WALLS OR WITHIN / NEAR ANY SLOPES STEEPER THAN 3H : 1V. POLES, FIXTURES, PRECAST BASES, ELECTRICAL ITEMS AND INSTALLATION PER MUSCO LIGHTING.

NOBADEER FIELDS
ATHLETIC LIGHTING
NANTUCKET, MA

MUSCO Lighting
CORPORATE: 100 1st AVE WEST
OSKALOOSA, IA 52577
(800) 825-6020

STRUCTURAL ENGINEERS, P.C.
114 NICHOLAS DRIVE
MARSHALLTOWN, IOWA 50158
PHONE NUMBER: 641-752-6334
EMAIL: MSL.INFO@SEPC.BIZ

KYLE G. LACINA STRUCTURAL No. 46148 REGISTERED PROFESSIONAL ENGINEER — COMMONWEALTH OF MASSACHUSETTS

DRAWING TITLE: POLE AND FOUNDATION
SCALE: SEE PLAN
NOTES: SCAN #240917B
PROJECT NUMBER 240917
DATE 24 FEBRUARY 2025
DRAWING NUMBER C1
OF ONE

USE OR REPRODUCTION OF THIS INFORMATION OTHER THAN ITS INTENDED PURPOSE FOR THIS PROJECT IS PROHIBITED WITHOUT WRITTEN CONSENT FROM MUSCO SPORTS LIGHTING, LLC.

Project:
TOWN OF NANTUCKET

NOBADEER ATHLETIC FIELDS IMPROVEMENTS

7 NOBADEER FARM ROAD

Weston & Sampson
Weston & Sampson Engineers, Inc.
1 Washington Mall, 10th Floor
Boston, MA 02108
978.532.1900 800.SAMPSON
www.westonandsampson.com

Consultants:

Revisions:

No.	Date	Description

COA:

Seal:

MASSACHUSETTS Brandon M Kunkel NO. 4040 REGISTERED LANDSCAPE ARCHITECT

Issued For:
BID DOCUMENTS

Scale: AS NOTED

Date: AUGUST 7, 2026
Drawn By:
Reviewed By:
Approved By:
W&S Project No.: ENG24-1207
W&S File No.:

Drawing Title:
SPORTS LIGHTING PLAN AND DETAILS

Sheet Number:
L805

COPYRIGHT © 2026 WESTON & SAMPSON, INC.

\\wse03.local\WSE\Projects\MA\Nantucket MA\Nobadeer Fields\06-CAD\L800 DETAILS.dwg Almeida, Antone 8/7/2026 7:06 PM

ELECTRICAL ABBREVIATIONS LIST

1P	1 POLE (2P, 3P, 4P, ETC.)
A	AMPERE
AC	ABOVE COUNTER OR AIR CONDITIONER
ACLG	ABOVE CEILING
ADO	AUTOMATIC DOOR OPENER
AF	AMP FRAME
AFF	ABOVE FINISHED FLOOR
AFG	ABOVE FINISHED GRADE
AFI	ARC FAULT CIRCUIT INTERRUPTER
AHU	AIR HANDLING UNIT
AL	ALUMINUM
ALT	ALTERNATE
AMP	AMPERE
AMPL	AMPLIFIER
ANNUN	ANNUNCIATOR
APPROX	APPROXIMATELY
AQ-STAT	AQUASTAT
ARCH	ARCHITECT, ARCHITECTURAL
AS	AMP SWITCH
AT	AMP TRIP
ATS	AUTOMATIC TRANSFER SWITCH
AUTO	AUTOMATIC
AUX	AUXILIARY
AV	AUDIO VISUAL
AWG	AMERICAN WIRE GAUGE
BATT	BATTERY
BD	BOARD
BLDG	BUILDING
BMS	BUILDING MANAGEMENT SYSTEM
C	CONDUIT
CAB	CABINET
CAT	CATALOG
CATV	CABLE TELEVISION
CB	CIRCUIT BREAKER
CCTV	CLOSED CIRCUIT TELEVISION
CKT	CIRCUIT
CLG	CEILING
COMB	COMBINATION
CMPR	COMPRESSOR
CONN	CONNECTION
CONST	CONSTRUCTION
CONT	CONTINUATION OR CONTINUOUS
CONTR	CONTRACTOR
CONV	CONVECTOR
CP	CIRCULATING PUMP
CRT	CATHODE-RAY TUBE
CT	CURRENT TRANSFORMER
CTR	CENTER
CU	COPPER
DCP	DOMESTIC WATER CIRCULATING PUMP
DEPT	DEPARTMENT
DET	DETAIL
DIA	DIAMETER
DISC	DISCONNECT
DIST	DISTRIBUTION
DN	DOWN
DPR	DAMPER
DS	SAFETY DISCONNECT SWITCH
DT	DOUBLE THROW
DWG	DRAWING
EC	ELECTRICAL CONTRACTOR
ELEC	ELECTRIC, ELECTRICAL
ELEV	ELEVATOR
EM	EMERGENCY
EMS	ENERGY MANAGEMENT SYSTEM
EMT	ELECTRICAL METALLIC TUBING
EP	ELECTRIC PNEUMATIC
EQUIP	EQUIPMENT
EWC	ELECTRIC WATER COOLER
EXIST	EXISTING
EXH	EXHAUST
EXP	EXPLOSION PROOF
FA	FIRE ALARM
FABP	FIRE ALARM BOOSTER POWER SUPPLY PANEL
FACP	FIRE ALARM CONTROL PANEL
FCU	FAN COIL UNIT
FIXT	FIXTURE
FLR	FLOOR
FLUOR	FLUORESCENT
FU	FUSE
FUDS	FUSED SAFETY DISCONNECT SWITCH
GA	GAUGE
GAL	GALLON
GALV	GALVANIZED
GC	GENERAL CONTRACTOR
GEN	GENERATOR
GFI	GROUND FAULT CIRCUIT INTERRUPTER
GFP	GROUND FAULT PROTECTOR
GND	GROUND
GRS	GALVANIZED RIGID STEEL (CONDUIT)
GYP BD	GYPSUM BOARD
HOA	HANDS-OFF-AUTOMATIC SWITCH
HORIZ	HORIZONTAL
HP	HORSEPOWER
HPF	HIGH POWER FACTOR
HT	HEIGHT
HTG	HEATING
HTR	HEATER
HV	HIGH VOLTAGE
HVAC	HEATING, VENTILATING AND AIR CONDITIONING
HWP	HYDRONIC WATER PUMP
IC	INTERRUPTING CAPACITY
IG	ISOLATED GROUND
IMC	INTERMEDIATE METAL CONDUIT
INCAND	INCANDESCENT
IR	INFRARED
I/W	INTERLOCK WITH
J-BOX	JUNCTION BOX
KV	KILOVOLT
KVA	KILOVOLT-AMPERE
KVAR	KILOVOLT-AMPERE REACTIVE
KW	KILOWATT
KWH	KILOWATT HOUR
LOC	LOCATE OR LOCATION
LT	LIGHT
LTG	LIGHTING
LTNG	LIGHTNING
LV	LOW VOLTAGE
MAX	MAXIMUM
MAG.S	MAGNETIC STARTER
M/C	MOMENTARY CONTACT
MC	MECHANICAL CONTRACTOR
MCB	MAIN CIRCUIT BREAKER
MCC	MOTOR CONTROL CENTER
MDC	MAIN DISTRIBUTION CENTER
MDP	MAIN DISTRIBUTION PANEL
MFR	MANUFACTURER
MFS	MAIN FUSED DISCONNECT SWITCH
MH	MANHOLE
MIC	MICROPHONE
MIN	MINIMUM
MISC	MISCELLANEOUS
MLO	MAIN LUGS ONLY
MMS	MANUAL MOTOR STARTER
MOA	MULTIOUTLET ASSEMBLY
MSP	MOTOR STARTER PANELBOARD
MSBD	MAIN SWITCHBOARD
MT	MOUNT
MT.C	EMPTY CONDUIT
MTS	MANUAL TRANSFER SWITCH
MTR	MOTOR, MOTORIZED
N.C.	NORMALLY CLOSED
NEC	NATIONAL ELECTRICAL CODE
NEMA	NATIONAL ELECTRICAL MANUFACTURER'S ASSOCIATION
NFDS	NON-FUSED SAFETY DISCONNECT SWITCH
NIC	NOT IN CONTRACT
NL	NIGHT LIGHT
N.O.	NORMALLY OPEN
NPF	NORMAL POWER FACTOR
NTS	NOT TO SCALE
OH	OVERHEAD
OHD	OVERHEAD DOOR
OL	OVERLOADS
PA	PUBLIC ADDRESS
PB	PULL BOX OR PUSHBUTTON
PE	PNEUMATIC ELECTRIC
PED	PEDESTAL
PF	POWER FACTOR
PH	PHASE
PIV	POST INDICATING VALVE
PNL	PANEL
PP	POWER POLE
PR	PAIR
PRI	PRIMARY
PROJ	PROJECTION
PRV	POWER ROOF VENTILATOR
PT	POTENTIAL TRANSFORMER
PVC	POLYVINYL CHLORIDE (CONDUIT)
PWR	POWER
QUAN	QUANTITY
RCPT	RECEPTACLE
REQD	REQUIRED
RM	ROOM
RM	ROOM
RSC	RIGID STEEL CONDUIT
RTU	ROOF TOP UNIT
SC	SURFACE CONDUIT
SEC	SECONDARY
SHT	SHEET
SIM	SIMILAR
S/N	SOLID NEUTRAL
SPEC	SPECIFICATION
SPKR	SPEAKER
SP	SPARE
SR	SURFACE RACEWAY
SS	STAINLESS STEEL
SSW	SELECTOR SWITCH
S/S	STOP/START PUSHBUTTONS
STA	STATION
STD	STANDARD
SURF	SURFACE MOUNTED
SW	SWITCH
SWBD	SWITCHBOARD
SYM	SYMMETRICAL
SYS	SYSTEM
TEL	TELEPHONE
TEL/DATA	TELEPHONE/DATA
TERM	TERMINAL
TL	TWIST LOCK
TR	TAMPER RESISTANT
T-STAT	THERMOSTAT
TTC	TELEPHONE TERMINAL CABINET
TV	TELEVISION
TVTC	TELEVISION TERMINAL CABINET
TYP	TYPICAL
UC	UNDER COUNTER
UE	UNDERGROUND ELECTRICAL
UG	UNDERGROUND
UH	UNIT HEATER
UT	UNDERGROUND TELEPHONE
UTIL	UTILITY
UV	UNIT VENTILATOR OR ULTRAVIOLET
V	VOLT
VA	VOLT-AMPERES
VDT	VIDEO DISPLAY TERMINAL
VERT	VERTICAL
VFD	VARIABLE FREQUENCY DRIVE
VOL	VOLUME
W	WATT
W/	WITH
WG	WIRE GUARD
WH	WATER HEATER
W/O	WITHOUT
WP	WEATHERPROOF
XFMR	TRANSFORMER
XFR	TRANSFER
∠	ANGLE
@	AT
Δ	DELTA
'	FEET
"	INCHES
#	NUMBER
Ø	PHASE
C	CENTER LINE
P	PLATE

LIGHTING LEGEND

AE 1,a — 1' X 4' PENDANT OR SURFACE MOUNTED EMERGENCY LED FIXTURE WITH EMERGENCY BATTERY BACKUP BALLAST. PROVIDE THIRD WIRE FOR EMERGENCY MODE BYPASS IF SWITCHED (TYPICAL). "AE" DENOTES FIXTURE TYPE; NUMERAL DENOTES CIRCUIT NUMBER. "a" SUBSCRIPT DENOTES SWITCH CONTROL WHERE SHOWN

WE 1,c — WALL MOUNTED EMERGENCY LED FIXTURE WITH EMERGENCY BATTERY BACKUP BALLAST. PROVIDE THIRD WIRE FOR EMERGENCY MODE BYPASS IF SWITCHED (TYPICAL). "WE" DENOTES FIXTURE TYPE; NUMERAL DENOTES CIRCUIT NUMBER. "c" SUBSCRIPT DENOTES SWITCH CONTROL WHERE SHOWN

5 — WALL MOUNTED EXIT SIGN. ARROWS DENOTE DIRECTION OF EGRESS. NUMERAL DENOTES CIRCUIT NUMBER. SHADED CHEVRONS DENOTE EXIT FACES.

POLE MOUNTED SPORTS LIGHT FIXTURE

POWER LEGEND

ELECTRICAL CABINET

P2G1 — 208V PANELBOARD-SURFACE MOUNTED
- P = PANEL
- 2 = 208V
- G - GENERAL
- L = LIGHTING
- M = MECHANICAL
- 1 = PANEL NUMBER

LH — LIGHTING HANDHOLE

HH — POWER HANDHOLE

30AS/20AF — FUSIBLE SAFETY SWITCH - RATING AND TYPE AS NOTED ON THE DRAWING. (30 AMP, 20 AMP FUSE, 3 POLE)

VFD — VARIABLE FREQUENCY DRIVE

1 — MOTOR, NUMERAL DENOTES HORSE POWER

LIGHTING CONTROL LEGEND

LIGHTING CONTROL SWITCHES

(MOUNT 4'-0" AFF UNLESS NOTED OTHERWISE.)

$a — SINGLE POLE SWITCH, "a" SUBSCRIPT DENOTES CIRCUITS CONTROLLED.

RECEPTACLE LEGEND

(MOUNT 18" AFF TO CENTER LINE UNLESS NOTED OTHERWISE)

DUPLEX CONVENIENCE GROUND FAULT CIRCUIT INTERRUPTER (GFCI) OUTLET MOUNTED 18" ABOVE FINISHED FLOOR UNLESS NOTED OTHERWISE NEXT TO OUTLET ON DRAWING.
WP = WEATHERPROOF

GENERAL NOTES

1. DRAWINGS ARE DIAGRAMMATIC ONLY. THE EXACT LOCATION, MOUNTING HEIGHTS, SIZE OF EQUIPMENT AND ROUTING OF RACEWAYS SHALL BE COORDINATED AND DETERMINED IN THE FIELD.
2. ALL STRAIGHT FEEDER, BRANCH CIRCUIT AND AUXILIARY SYSTEM CONDUIT RUNS SHALL BE PROVIDED WITH SUFFICIENT PULL BOXES TO LIMIT THE MAXIMUM LENGTH OF ANY SINGLE CABLE PULL TO 150 FEET. EXACT SIZES OF PULL BOXES AND LOCATIONS TO BE DETERMINED IN THE FIELD BY THE ELECTRICAL CONTRACTOR.
3. FURNISH ALL REQUIRED ACCESS PANELS AS REQUIRED TO SUIT FIELD CONDITIONS FOR THE PROPER OPERATION AND MAINTENANCE OF THE ELECTRICAL SYSTEM. THE EXACT SIZES AND PHYSICAL LOCATIONS SHALL BE TO SUIT ACCESSIBILITY AND CONSTRUCTION CONDITIONS. ALL ACCESS PANELS PROVIDED BY THE ELECTRICAL CONTRACTOR SHALL MATCH EXACTLY THE ACCESS PANELS FURNISHED AND INSTALLED BY THE GENERAL CONTRACTOR. THE ACCESS PANELS WILL BE INSTALLED BY THE TRADE CONTRACTOR UNDER THE APPROPRIATE SECTION OF THE SPECIFICATIONS FOR THE SURFACE IN WHICH THE PANELS ARE LOCATED.
4. THE ELECTRICAL CONTRACTOR SHALL COORDINATE WITH ALL OTHER CONTRACTORS AS APPLICABLE AS TO THE EXACT LOCATION OF THEIR RESPECTIVE EQUIPMENT; THE POWER WIRING, CONTROL WIRING AND ALL ELECTRICAL CONNECTIONS AND CONDUIT TURN-UPS SHALL BE COORDINATED WITH THE RESPECTIVE CONTRACTORS BEFORE THE START OF CONSTRUCTION IN THE FIELD.
5. COMBINED HOMERUNS OF TWO (2) OR THREE (3) CIRCUITS MAY BE UTILIZED. HOWEVER, THE NEUTRAL CONDUCTOR IS TO BE INCREASED TO #10AWG. COMBINED HOMERUNS ARE TO BE LIMITED TO 20A, LIGHTING AND POWER CIRCUITS.
6. WORK SHALL CONFORM TO THE FOLLOWING CODES: 2026 NATIONAL ELECTRICAL CODE WITH MASSACHUSETTS AMENDMENTS, MASSACHUSETTS BUILDING CODE, NFPA AND REQUIREMENTS OF LOCAL AUTHORITIES HAVING JURISDICTION.
7. THE WORD "CONTRACTOR" AS USED IN THE "ELECTRICAL WORK" SHALL MEAN THE ELECTRICAL CONTRACTOR.
8. CONTRACTOR SHALL PAY FOR ALL PERMITS, INSURANCE AND TESTS, AND SHALL PROVIDE LABOR AND MATERIAL TO COMPLETE THE ELECTRICAL WORK SHOWN.
9. CONTRACTOR SHALL PAY ELECTRIC UTILITY COMPANY BACKCHARGES
10. CONTRACTOR SHALL PROVIDE ALL REQUIRED COORDINATION WITH ELECTRIC UTILITIES.
11. EXCEPT AS OTHERWISE NOTED, THE ELECTRICAL WORK SHALL INCLUDE PANELBOARDS, CIRCUIT BREAKERS, FEEDERS, WIRING, RACEWAYS AND LIGHTING FIXTURES.
12. THE CONTRACTOR SHALL PROVIDE ALL TEMPORARY LIGHTING AND POWER AND THE GENERAL CONTRACTOR SHALL PAY ALL ENERGY CHARGES FOR TEMPORARY POWER AND LIGHTING.
13. DURING CONSTRUCTION, THE ELECTRICAL CONTRACTOR SHALL KEEP HIS PORTION OF THE WORK NEAT, CLEAN AND ORDERLY.
14. ALL SYSTEMS SHALL BE TESTED FOR SHORT CIRCUIT AND GROUNDS PRIOR TO ENERGIZING AND ANY DEFECTS SHALL BE CORRECTED.
15. ALL CUTTING AND PATCHING REQUIRED FOR ELECTRICAL WORK SHALL BE INCLUDED AS PART OF THIS SECTION.
16. COMPLETE SHOP DRAWINGS SHALL BE SUBMITTED FOR ELECTRICAL EQUIPMENT. WHERE SPECIFIED ELECTRICAL EQUIPMENT IS SUBSTITUTED, THE ELECTRICAL CONTRACTOR SHALL SUBMIT COMPLETE SPECIFICATIONS ON THE SUBSTITUTE AS WELL AS THE ITEM ORIGINALLY SPECIFIED.
17. MATERIALS SHALL BE SPECIFICATION GRADE AND UL LISTED.
18. WHERE MATERIAL IS CALLED OUT IN THE LEGEND BY MANUFACTURER, TYPE OR CATALOG NUMBER, SUCH DESIGNATIONS ARE TO ESTABLISH STANDARDS OR DESIRED QUALITY. ACCEPTANCE OR REJECTIONS OF PROPOSED SUBSTITUTIONS SHALL BE SUBJECT TO THE APPROVAL OF THE OWNER.
19. WORK SHALL BE COORDINATED WITH THAT OF OTHER TRADES TO ELIMINATE INTERFERENCES.
20. ELECTRICAL WORK SHALL BE GUARANTEED FOR A PERIOD OF ONE YEAR FROM DATE OF FINAL C0MPLETION.
21. WORK SHALL BE GROUNDED IN ACCORDANCE WITH CODE REQUIREMENTS. COMPLETE EQUIPMENT (INSULATED GREEN WIRE) GROUNDING SYSTEM SHALL BE INSTALLED.
22. WIRING METHODS:
    a. EXTERIOR UNDERGROUND FEEDERS SHALL BE PVC SCHEDULE 80 FOR DIRECT BURIED AND PVC SCHEDULE 40 FOR CONCRETE ENCASED.
    b. EXTERIOR ABOVE GRADE FEEDERS SHALL BE RGS CONDUIT.
    c. INTERIOR FEEDERS EXPOSED OR BURIED IN CONCRETE WALLS/SLABS SHALL BE RGS CONDUIT.
23. NO CONDUIT OR WIRE SHALL BE RUN IN OR BELOW SLAB WITHOUT ENGINEER APPROVAL OR NOTED OTHERWISE ON THE PLANS.
24. FEEDERS SHALL BE ROUTED TIGHT TO THE UNDERSIDE OF THE BUILDING STRUCTURE. CONDUIT SHALL BE INSTALLED PARALLEL AND PERPENDICULAR TO MAIN BUILDING SUPPORTS.
25. FEEDER TAPS WILL NOT BE ALLOWED IN PANELBOARD GUTTERS.
26. CONTRACTOR SHALL CHECK EXISTING CONDITIONS TO DETERMINE EXACT EXTENT OF WORK TO BE PERFORMED PRIOR TO BIDDING. DIMENSIONS RELEVANT TO EXISTING WORK SHALL BE VERIFIED IN THE FIELD.
27. IN AREAS NOT AFFECTED BY THIS RENOVATION, THIS SUBCONTRACTOR SHALL MAINTAIN CONTINUITY OF ELECTRIC SERVICE.
28. ELECTRICAL SHUTDOWN SHALL BE AT A TIME AND DATE APPROVED BY THE OWNER.
29. PROVIDE AS-BUILT "CADD" DRAWINGS AT THE COMPLETION OF THE PROJECT.
30. ADDRESS QUESTIONS TO THE ENGINEER IN WRITING BEFORE AWARD OF CONTRACT, OTHERWISE ENGINEER INTERPERTATION OF MEANING AND INTENT OF DRAWINGS SHALL BE FINAL.

Project:
TOWN OF NANTUCKET

TOWN OF NANTUCKET MASS INCORPORATED 1671

NOBADEER ATHLETIC FIELDS IMPROVEMENTS

7 NOBADEER FARM ROAD

Weston & Sampson Engineers, Inc.
1 Washington Mall, 10th Floor
Boston, MA 02108
978.532.1900 800.SAMPSON
www.westonandsampson.com

Consultants:

Revisions:

No.	Date	Description

COA:

Seal:
COMMONWEALTH OF MASSACHUSETTS
AARON J BELANGER ELECTRICAL No. 60972
REGISTERED PROFESSIONAL ENGINEER

Issued For: BID DOCUMENTS

Scale: AS NOTED

Date: AUGUST 7, 2026
Drawn By: TPV
Reviewed By: MAS/DNM
Approved By: AJB
W&S Project No.: ENG24-1207
W&S File No.:

Drawing Title:
ELECTRICAL ABBREVIATIONS, GENERAL NOTES AND LEGENDS

Sheet Number:
E001

COPYRIGHT © 2026 WESTON & SAMPSON, INC.

P:\MA\Nantucket MA\Nobadeer Fields\06-CAD\Electrical\E001.dwg Velardi.Thomas 8/7/2026 9:42 AM

DRAWING NOTES:

1. REFER TO E001 FOR ELECTRICAL ABBREVIATIONS, LEGEND AND GENERAL NOTES.
2. REFER TO E501 FOR ELECTRICAL DETAILS.
3. REFER TO E601 FOR ELECTRICAL SCHEDULES AND ONE LINE DIAGRAM.
4. RECESSED LED HANDRAIL LUMINAIRE.
5. ALTERNATE #1: SCOREBOARD AND FOOTINGS.
6. ALTERNATE #4: MUSCO LIGHTS AND FOOTINGS.

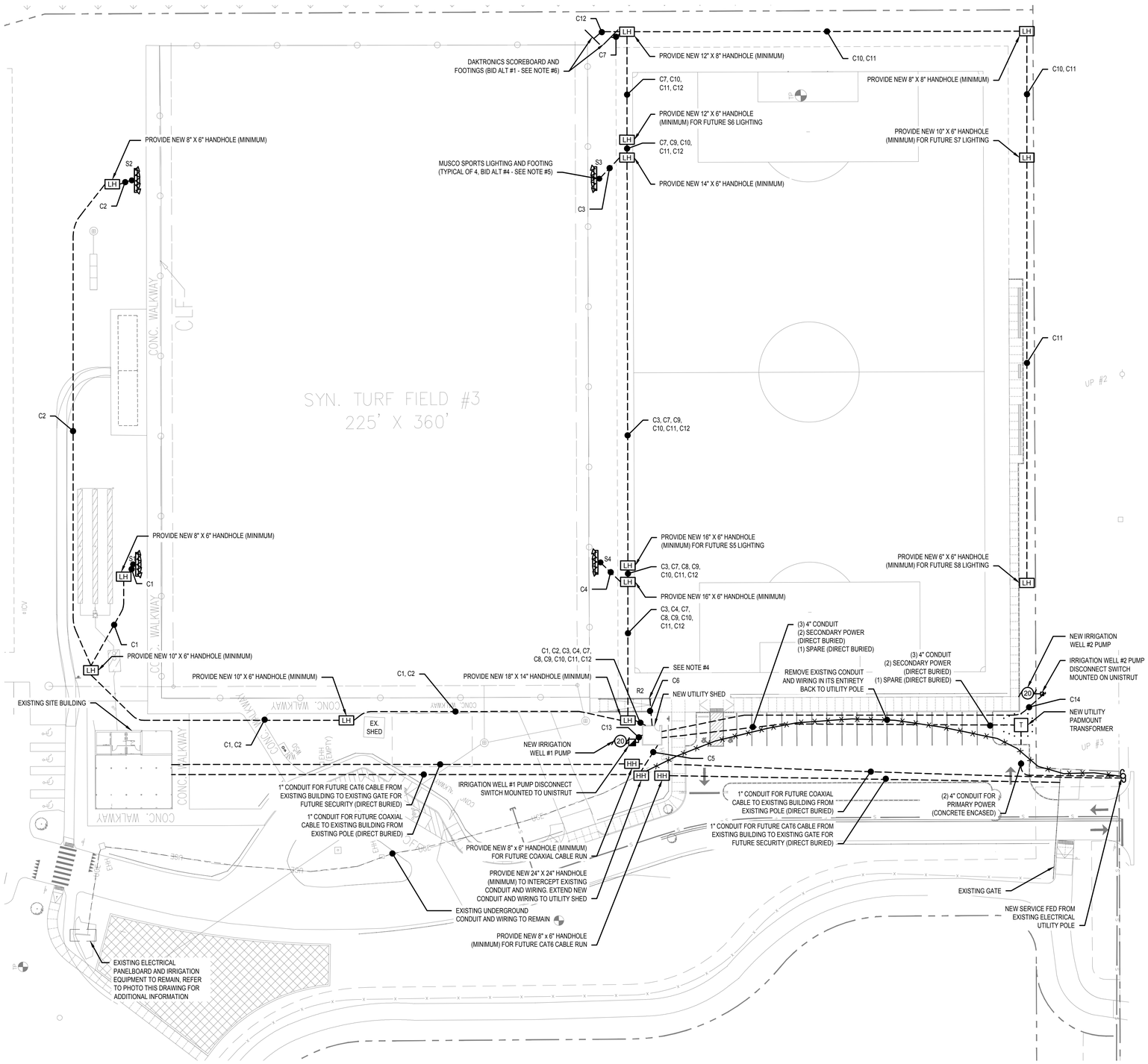

1 ELECTRICAL SITE PLAN

SCALE: 1" = 30'

2 EXISTING SITE ELECTRICAL EQUIPMENT

SCALE: NOT TO SCALE

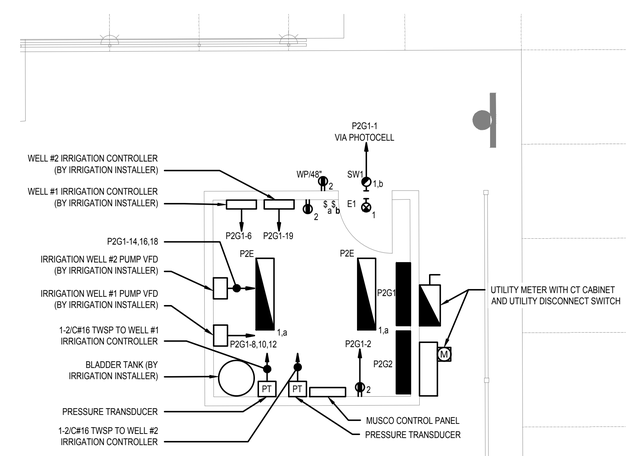

3 ELECTRICAL UTILITY SHED PLAN

SCALE: 1/4" = 1'-0"

0' 2' 4' 8'
SCALE: 1/4" = 1'-0"

0' 15' 30' 60'
SCALE: 1" = 30'

Project:
TOWN OF NANTUCKET

NOBADEER ATHLETIC FIELDS IMPROVEMENTS

7 NOBADEER FARM ROAD

Weston & Sampson Engineers, Inc.
1 Washington Mall, 10th Floor
Boston, MA 02108
978.532.1900 800.SAMPSON
www.westonandsampson.com

Consultants:

Revisions:

No.	Date	Description

COA:

Seal:

COMMONWEALTH OF MASSACHUSETTS
AARON J. BELANGER
ELECTRICAL
No. 60972
PROFESSIONAL ENGINEER

Issued For:
BID DOCUMENTS

Scale: AS NOTED

Date: AUGUST 7, 2026
Drawn By: TPV
Reviewed By: MAS/DNM
Approved By: AJB
W&S Project No.: ENG24-1207
W&S File No.:

Drawing Title:
ELECTRICAL SITE PLAN

Sheet Number:
E002

COPYRIGHT © 2026 WESTON & SAMPSON, INC.

P:\Municipalities\Nantucket Fields\CAD\Electrical\E002.dwg Valerie Thomas 8/7/2026 9:42 AM

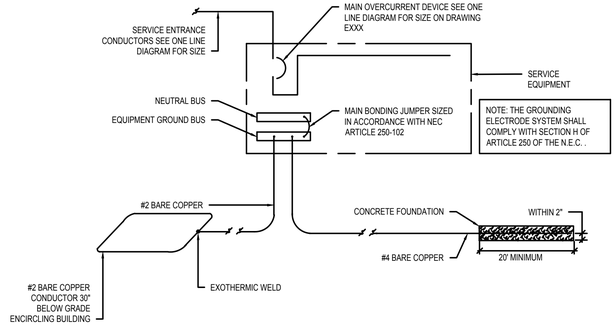

1 SERVICE GROUNDNG DETAIL

NOT TO SCALE

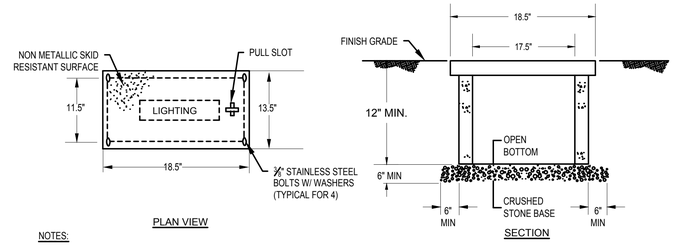

NOTES:

1. THIS HANDHOLE IS INTENDED FOR NON-DELIBERATE VEHICULAR TRAFFIC ONLY.
2. HANDHOLE SHALL BE PREFABRICATED POLYMER CONCRETE AGGREGATE EQUAL TO QUAZITE.
3. SIZE INDICATED IS THE MINIMUM ACCEPTABLE. CONTRACTOR SHALL COORDINATE EXACT SIZE REQUIRED BASED ON THE APPLICABLE NUMBER OF CONDUITS.

2 PREFABRICATED HAND HOLE DETAIL

SCALE: NOT TO SCALE

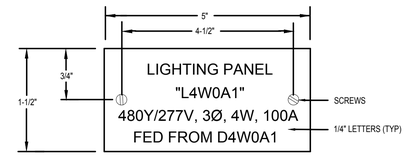

NOTES:

1. REFER TO SPECIFICATIONS FOR ADDITIONAL NAMEPLATE REQUIREMENTS.
2. NAMEPLATE TO BE 1/16" THICK WHITE PLASTIC WITH BLACK CENTER LAMINATE. FACE SHALL BE WHITE, ENGRAVED LETTERS SHALL BE BLACK.
3. SECURE NAMEPLATE TO SURFACES WITH (2) FLAT HEAD BRASS SCREWS. ADHESIVE CEMENT SHALL NOT BE ALLOWED.
4. NAMEPLATE INFORMATION SHALL INCLUDE DEVICE NAME, SUPPLY VOLTAGE, AMPERAGE AND LOCATION FED FROM.

3 TYPICAL NAMEPLATE DETAIL

NOT TO SCALE

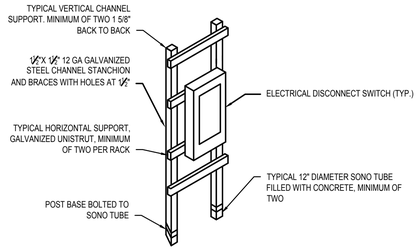

4 UNISTRUT MOUNTED EQUIPMENT DETAIL

NOT TO SCALE

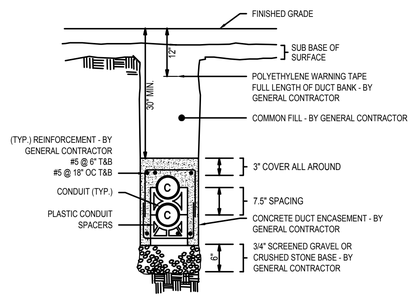

5 TYPICAL CONCRETE ENCASED CONDUIT DETAIL

SCALE: NOT TO SCALE

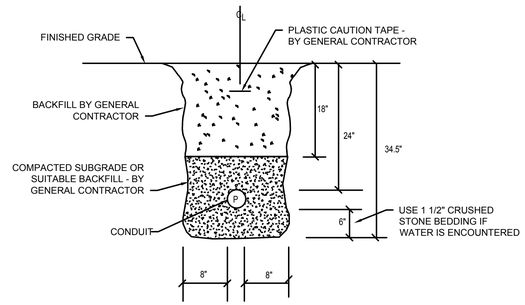

6 TYPICAL DIRECT BURIED SINGLE CONDUIT DETAIL

SCALE: NOT TO SCALE

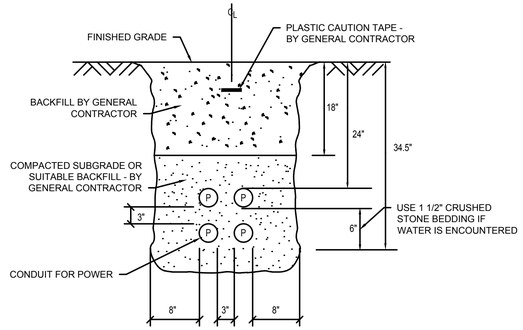

7 TYPICAL DIRECT BURIED MULTIPLE CONDUIT DETAIL

SCALE: NOT TO SCALE

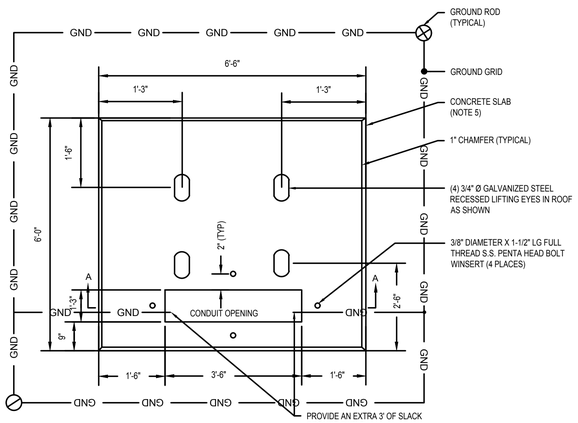

PLAN VIEW

NOT TO SCALE

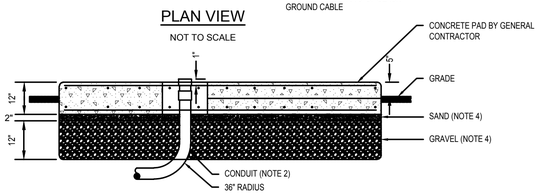

SECTION A-A

NOT TO SCALE

PADMOUNT - FOUNDATION NOTES:

1. SCOPE - THIS STANDARD COVERS SPECIFICATIONS FOR THE CONSTRUCTION OF PADMOUNT TRANSFORMER FOUNDATIONS AND GROUNDING FOR NATIONAL GRID.
2. CONDUIT BY ELECTRICAL CONTRACTOR - INSTALL AS SHOWN BEFORE SLAB IS POURED. USE 36" RADIUS BENDS, WITH COUPLINGS, NIPPLES AND BUSHINGS AS REQUIRED. (MATERIAL MAY BE GALVANIZED STEEL, BLACK IRON, OR TYPE II FIBER OR PLASTIC.) TERMINATIONS OF CONDUITS SHALL BE LOCATED EXACTLY AS SHOWN, SOLID OR DOTTED, DEPENDING UPON NUMBER OF DUCTS. THE NIPPLE AND BUSHING SHOULD BE INSTALLED AFTER THE TRANSFORMER IS PLACED AND BEFORE THE CABLES ARE PULLED.
3. GROUND GRID BY ELECTRICAL CONTRACTOR -INSTALL #1/0 S.D. 7 STRAND BARE COPPER WIRE LOOP 1'-0" BELOW GRADE. BOND TO ALL EXPOSED METALLIC CONDUIT AND LEAVE 3'-0" OF WIRE ABOVE PAD FOR GROUNDING TRANSFORMER AT TWO OPPOSITE POINTS IN THE CABLE CONDUIT OPENINGS. 3.A. PHOS-COPPER BRAZE CONNECTIONS, CADWELD, OR USE TWO APPROVED CONNECTORS PER JOINT. INSTALL TWO 8 FT. GALVANIZED STEEL (3"4") GROUND RODS WHERE SHOWN. LEAVE GRID EXPOSED UNTIL INSPECTED BY THE UTILITY COMPANY.
4. GRAVEL & SAND BY GENERAL CONTRACTOR -SHALL BE PLACED AS SHOWN IN UTILITY CONSTRUCTION STANDARDS; THE GRAVEL BEING COMPACTED AND THE SAND THOROUGHLY WETTED JUST BEFORE PLACING THE CONCRETE.
5. CONCRETE SLAB BY GENERAL CONTRACTOR CONCRETE IN ACCORDANCE WITH UTILITY COMPANY REQUIREMENTS. REINFORCE WITH 1/2" RODS LOCATED ON A 12" X 12" GRID AND LOCATED IN THE MIDDLE OF THE SLAB.
6. THE ELECTRICAL CONTRACTOR SHALL COORDINATE WITH THE UTILITY COMPANY FOR ALL INSTALLATION REQUIREMENTS PRIOR TO THE START OF ANY WORK.

8 PAD MOUNTED UTILITY TRANSFORMER DETAIL

SCALE: NOT TO SCALE

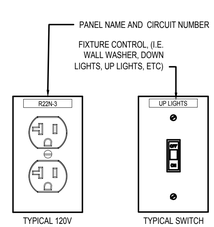

NOTE: REFER TO SPECIFICATIONS FOR LABEL MATERIAL REQUIREMENTS.

9 TYPICAL DEVICE LABELING DETAIL

SCALE: NOT TO SCALE

Project:
TOWN OF NANTUCKET

NOBADEER ATHLETIC FIELDS IMPROVEMENTS

7 NOBADEER FARM ROAD

Weston & Sampson Engineers, Inc.
1 Washington Mall, 10th Floor
Boston, MA 02108
978.532.1900 800.SAMPSON
www.westonandsampson.com

Consultants:

Revisions:

No.	Date	Description

COA:

Seal:

COMMONWEALTH OF MASSACHUSETTS
AARON J. BELANGER
ELECTRICAL
No. 60972
REGISTERED PROFESSIONAL ENGINEER

Issued For:
BID DOCUMENTS

Scale: AS NOTED

Date: AUGUST 7, 2026
Drawn By: TPV
Reviewed By: MAS/DNM
Approved By: AJB
W&S Project No.: ENG24-1207
W&S File No.:

Drawing Title:
ELECTRICAL DETAILS

Sheet Number:
E501

COPYRIGHT © 2026 WESTON & SAMPSON, INC.

P:\MA\Nantucket MA\Nobadeer Fields\06\CAD\Electrical\E501.dwg Vishal Thomas\8/7/2026 9:42 AM

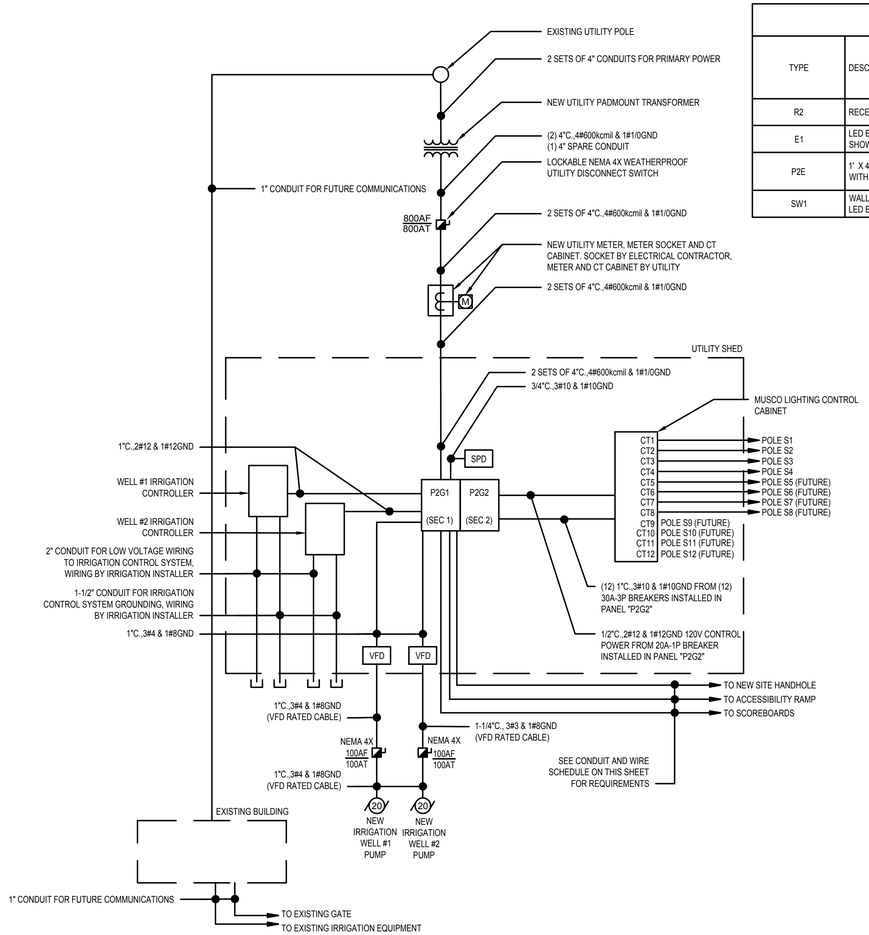

1 ONE LINE DIAGRAM

SCALE: NOT TO SCALE

LIGHTING FIXTURE SCHEDULE

TYPE	DESCRIPTION	MANUFACTURER	CATALOG NUMBER	NO. OF LAMPS	LAMP TYPE	LUMENS	COLOR TEMP	MOUNTING	VOLTAGE	LOAD (WATTS)	NOTES
R2	RECESSED LED HANDRAIL LUMINAIRE	HESS LIGHTING	PUCK-XT-RD-40K-DSB	-	LED	185	4000K	RECESSED	120	1.5	CONDUIT C6
E1	LED EXIT SIGN, MOUNTING, NUMBER OF FACES AND ARROWS AS SHOWN ON FLOOR PLANS	COOPER LIGHTING	LPX7-SD	-	LED	-	-	UNIVERSAL	120	2.4	8'-6" TYPICAL MOUNTING HEIGHT
P2E	1' X 4' ENCLOSED AND GASKETED, VAPORTIGHT LED FIXTURE WITH INTEGRAL LED EMERGENCY DRIVER	COOPER LIGHTING	4VT2-LD5-4-DR-UNV-EL10W-L835-CD1-WL-U-VT2-CHAIN/SET-U	-	LED	4000	3500K	PENDANT	120	30	-
SW1	WALL MOUNTED EXTERIOR LED LIGHT FIXTURE WITH INTEGRAL LED EMERGENCY DRIVER	COOPER LIGHTING	GWC-SA2C-740-U-T3-GM-CPB	-	LED	5000	4000K	WALL	120	34	-

CONDUIT AND WIRE SCHEDULE

CONDUIT TAG	FEEDER	FROM	TO	CONTACT	NO. OF FIXTURES	NO. OF OUTLETS	LOAD AMPS	CONTACT SIZE	REMARKS
C1	1"C.,3#8 & 1#10GND	MUSCO CABINET	SITE LIGHT S1	C1	1	-	10.97	30	DIRECT BURIED
C2	1"C.,3#6 & 1#10GND	MUSCO CABINET	SITE LIGHT S2	C2	1	-	10.97	30	DIRECT BURIED
C3	1"C.,3#8 & 1#10GND	MUSCO CABINET	SITE LIGHT S3	C3	1	-	10.97	30	DIRECT BURIED
C4	1"C.,3#10 & 1#10GND	MUSCO CABINET	SITE LIGHT S4	C4	1	-	10.97	30	DIRECT BURIED
C5	4"C.,4#600kcmil & 1#3GND	P2G1	NEW SITE HANDHOLE	-	-	-	EXISTING	-	DIRECT BURIED
C6	1"C.,2#12 & 1#12GND	P2G1	ACCESSIBLE RAMP	-	6	-	0.01	-	DIRECT BURIED
C7	1"C.,2#12 & 1#12GND	P2G1	SCOREBOARD	-	1	-	1.00	-	DIRECT BURIED
C8	1"C.,3#10 & 1#10GND	MUSCO CABINET	S5 HANDHOLE	C5	1	-	10.97	30	DIRECT BURIED
C9	1"C.,3#8 & 1#10GND	MUSCO CABINET	S6 HANDHOLE	C6	1	-	10.97	30	DIRECT BURIED
C10	1"C.,3#6 & 1#10GND	MUSCO CABINET	S7 HANDHOLE	C7	1	-	10.97	30	DIRECT BURIED
C11	1"C.,3#4 & 1#10GND	MUSCO CABINET	S8 HANDHOLE	C8	1	-	10.97	30	DIRECT BURIED
C12	1"C.,2#12 & 1#12GND	P2G1	SCOREBOARD	-	1	-	1.00	-	DIRECT BURIED
C13	1"C., 3#4 & 1#8GND	P2G1	IRRIGATION WELL #1 PUMP DISCONNECT	-	-	-	59.40	-	DIRECT BURIED
C14	1-1/4"C., 3#3 & 1#8GND	P2G1	IRRIGATION WELL #2 PUMP DISCONNECT	-	-	-	59.40	-	DIRECT BURIED

DISTRIBUTION BOARD SCHEDULE

DESIGNATION: P2G1
LOCATION: UTILITY SHED
RATING: 800 AMP MCB
MAIN: 800 AMP

S.C. RATING: 65kAIC
SERVICE: 208Y/120V, 3PH, 4W
MOUNTING: SURFACE

REMARKS: SERVICE ENTRANCE RATED

CKT. NO.	LOAD DESIGNATION	CIRCUIT BREAKER	LOAD A	LOAD B	LOAD C	CIRCUIT BREAKER	LOAD DESIGNATION	CKT. NO.
1	UTILITY SHED LIGHTING	20	0.52			20	UTILITY SHED RCPT	2
3	SCOREBOARD 1	20		0.97		20	RAMP LIGHTS	4
5	SCOREBOARD 2	20			0.24	20	IRRIGATION PUMP CONTROLLER	6
7	EXISTING SITE ELECTRICAL	400	45.55			100	IRRIGATION WELL #1 PUMP VFD	8
9				45.55				10
11					45.55			12
13	SPARE	30	7.2			100	IRRIGATION WELL #2 PUMP VFD	14
15				7.2				16
17					7.2			18
19	SPARE	20	-			20	SPARE	20
21	SPARE	20		-		20	SPARE	22
23	SPARE	20			-	20	SPARE	24
25	SPACE	-	-			-	SPACE	26
27	SPACE	-		-		-	SPACE	28
29	SPACE	-			-	-	SPACE	30
31	SPACE	-	-			-	SPACE	32
33	SPACE	-		-		-	SPACE	34
35	SPACE	-			-	-	SPACE	36
37	SPACE	-	-			-	SPACE	38
39	SPACE	-		-		-	SPACE	40
41	SPACE	-			-	-	SPACE	42
		SUB-TOTAL	53.27	53.72	52.99			
		TOTAL	159.98	KVA				
		ESTIMATED DEMAD LOAD	-	KVA				
		TOTAL DEMAND CURRENT	444.38	AMPS				

DISTRIBUTION BOARD SCHEDULE

DESIGNATION: P2G2
LOCATION: UTILITY SHED
RATING: 800 AMP MLO
MAIN: 800 AMP

S.C. RATING: 65kAIC
SERVICE: 208Y/120V, 3PH, 4W
MOUNTING: SURFACE

REMARKS:

CKT. NO.	LOAD DESIGNATION	CIRCUIT BREAKER	LOAD A	LOAD B	LOAD C	CIRCUIT BREAKER	LOAD DESIGNATION	CKT. NO.
1	SPORTS LIGHTING POLE S1	30	2.63			30	SPORTS LIGHTING POLE S2	2
3				2.63				4
5					2.63			6
7	SPORTS LIGHTING POLE S3	30	2.63			30	SPORTS LIGHTING POLE S4	8
9				2.63				10
11					2.63			12
13	FUTURE SPORTS LIGHTING POLE S5	30	2.63			30	FUTURE SPORTS LIGHTING POLE S6	14
15				2.63				16
17					2.63			18
19	FUTURE SPORTS LIGHTING POLE S7	30	2.63			30	FUTURE SPORTS LIGHTING POLE S8	20
21				2.63				22
23					2.63			24
25	FUTURE SPORTS LIGHTING POLE S9	30	2.63			30	FUTURE SPORTS LIGHTING POLE S10	26
27				2.63				28
29					2.63			30
31	FUTURE SPORTS LIGHTING POLE S11	30	2.63			30	FUTURE SPORTS LIGHTING POLE S12	32
33				2.63				34
35					2.63			36
37	MUSCO CONTROL PANEL	20	1.00			30	SPARE	38
39	SPARE	20		-				40
41	SPARE	20			-			42
		SUB-TOTAL	16.78	15.78	15.78			
		TOTAL	48.34	KVA				
		ESTIMATED DEMAD LOAD	16.78	KVA				
		TOTAL DEMAND CURRENT	48.68	AMPS				

Project:
TOWN OF NANTUCKET

NOBADEER ATHLETIC FIELDS IMPROVEMENTS

7 NOBADEER FARM ROAD

Weston & Sampson
Weston & Sampson Engineers, Inc.
1 Washington Mall, 10th Floor
Boston, MA 02108
978.532.1900 800.SAMPSON
www.westonandsampson.com

Consultants:

Revisions:

No.	Date	Description

COA:

Seal:
COMMONWEALTH OF MASSACHUSETTS
AARON J. BELANGER
ELECTRICAL
No. 60972
REGISTERED PROFESSIONAL ENGINEER

Issued For:
BID DOCUMENTS

Scale: AS NOTED

Date: AUGUST 7, 2026
Drawn By: TPV
Reviewed By: MAS/DNM
Approved By: AJB
W&S Project No.: ENG24-1207
W&S File No.:

Drawing Title:
ELECTRICAL ONE LINE AND SCHEDULES

Sheet Number:
E601

COPYRIGHT © 2026 WESTON & SAMPSON, INC.

P:\MA\Nantucket MA\Nobadeer Fields\06_CAD\Electrical\E601.dwg Vishal Thomas\8/7/2026 9:14 AM