MASSACHUSETTS DEPARTMENT OF TRANSPORTATION
HIGHWAY DIVISION

OXFORD
LEICESTER STREET/RT 56

STATE	FED. AID PROJ. NO.	SHEET NO.	TOTAL SHEETS
MA	HIP(NGB)-004S(015)X	1	66
PROJECT FILE NO.	605323		

TITLE SHEET & INDEX

PLAN AND PROFILE OF

LEICESTER STREET/RT 56

(BRIDGE NO. O-06-030)

IN THE TOWN OF

OXFORD

WORCESTER COUNTY

FEDERAL AID PROJECT NO. HIP(NGB)-004S(015)X

THESE PLANS ARE SUPPLEMENTED BY THE LATEST EDITIONS OF THE FOLLOWING PUBLICATIONS, AS IDENTIFIED IN THE CONTRACT SPECIAL PROVISIONS: THE MASSDOT CONSTRUCTION STANDARD DETAILS, THE MASSDOT STANDARD DRAWINGS FOR SIGNS AND SUPPORTS, THE MASSDOT STANDARD DRAWINGS FOR TRAFFIC SIGNALS AND HIGHWAY LIGHTING, THE MASSDOT OVERHEAD SIGNAL STRUCTURE AND FOUNDATION STANDARD DRAWINGS, THE MASSDOT TRAFFIC MANAGEMENT PLANS AND DETAIL DRAWINGS, AND THE ANSI AMERICAN STANDARD FOR NURSERY STOCK.

INDEX

SHEET NO.	DESCRIPTION
1	TITLE SHEET
2	LEGEND & ABBREVIATIONS
3	GENERAL NOTES
4	KEY PLAN
5	TYPICAL SECTIONS
6-7	GUARDRAIL DETAILS
8-9	CONSTRUCTION PLANS
10-11	PROFILES
12-13	CURB TIE & GRADING PLANS
14-15	TRAFFIC SIGN & PAVEMENT MARKINGS
16	TRAFFIC SIGN SUMMARY SHEET
17-22	TEMPORARY TRAFFIC CONTROL PLANS
23-24	UTILITY & DRAINAGE PLANS
25	TEMPORARY GRADING FOR UTILITY POLE WORK
26-60	BRIDGE NO. O-06-030 PLANS
61-66	CROSS SECTIONS

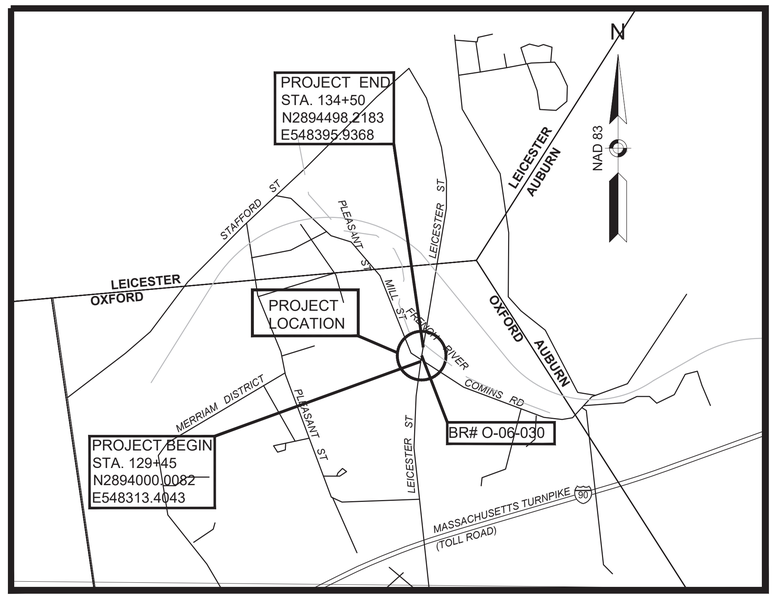

0 1000 2000 3000 4000

SCALE: 1" = 1000'

LENGTH OF PROJECT = 505.00 FEET = 0.096 MILES

DESIGN DESIGNATION (LEICESTER STREET/RT 56)

DESIGN SPEED	50 MPH
ADT (2023)	8,486
ADT (2027)	8,813
ADT (2047)	9,547
K	9.4%
D	51%
T (PEAK HOUR)	3.5%
T (AVERAGE DAY)	7.2%
DHV	897
DDHV	457
FUNCTIONAL CLASSIFICATION	URBAN MINOR ARTERIAL

COMMONWEALTH OF MASSACHUSETTS
ADAM GORDON NICASTRO
CIVIL
No. 54727
REGISTERED PROFESSIONAL ENGINEER

Adam G Nicastro, PE
Digitally signed by Adam G Nicastro, PE
Date: 2026.09.02 11:47:45 -04'00'

CDR MAGUIRE ENGINEERING
35 VILLAGE ROAD, SUITE #100
MIDDLETON, MA 01949

DATE	DESCRIPTION	REV #

massDOT
Massachusetts Department of Transportation
Highway Division

APPROVED

Digitally signed by Carrie Lavallee, P.E.
Date: 2026.09.03 10:19:52 -04'00'

09/03/2026

CHIEF ENGINEER **DATE**

605323_HD(TITLE).DWG Plotted on 2-Sep-2026 9:44 AM

GENERAL SYMBOLS

EXISTING	PROPOSED	DESCRIPTION
JB	JB	JERSEY BARRIER
CB	CB	CATCH BASIN
		CATCH BASIN CURB INLET
FP	FP	FLAG POLE
GP	GP	GAS PUMP
MB	MB	MAIL BOX
		POST SQUARE
		POST CIRCULAR
WELL	WELL	WELL
EHH	EHH	ELECTRIC HANDHOLE
		FENCE GATE POST
GG	GG	GAS GATE
BHL #	BHL #	BORING HOLE
MW #	MW #	MONITORING WELL
TP #	TP #	TEST PIT
		HYDRANT
		LIGHT POLE
CO.BD.		COUNTY BOUND
		GPS POINT
Ⓒ	Ⓒ	CABLE MANHOLE
Ⓓ	Ⓓ	DRAINAGE MANHOLE
Ⓔ	Ⓔ	ELECTRIC MANHOLE
Ⓖ	Ⓖ	GAS MANHOLE
Ⓜ	Ⓜ	MISC MANHOLE
Ⓢ	Ⓢ	SEWER MANHOLE
Ⓣ	Ⓣ	TELEPHONE MANHOLE
Ⓦ	Ⓦ	WATER MANHOLE
MHB	MHB	MASSACHUSETTS HIGHWAY BOUND
MON		MONUMENT
SB		STONE BOUND
TB		TOWN OR CITY BOUND
		TRAVERSE OR TRIANGULATION STATION
TPL or GUY	TPL or GUY	TROLLEY POLE OR GUY POLE
HTP		TRANSMISSION POLE
UFB	UFB	UTILITY POLE W/ FIREBOX
UPDL	UPDL	UTILITY POLE WITH DOUBLE LIGHT
ULT	ULT	UTILITY POLE W / 1 LIGHT
UPL	UPL	UTILITY POLE
		BUSH
•SIZE & TYPE		TREE
		STUMP
		SWAMP / MARSH
WG	WG	WATER GATE
PM	PM	PARKING METER
		OVERHEAD CABLE/WIRE
		CURBING
99		CONTOURS (ON-THE-GROUND SURVEY DATA)
99		CONTOURS (PHOTOGRAMMETRIC DATA)
		UNDERGROUND DRAIN PIPE (DOUBLE LINE 24 INCH AND OVER)
		UNDERGROUND ELECTRIC DUCT (DOUBLE LINE 24 INCH AND OVER)
		UNDERGROUND GAS MAIN (DOUBLE LINE 24 INCH AND OVER)
		UNDERGROUND SEWER MAIN (DOUBLE LINE 24 INCH AND OVER)
		UNDERGROUND TELEPHONE DUCT (DOUBLE LINE 24 INCH AND OVER)
		UNDERGROUND WATER MAIN (DOUBLE LINE 24 INCH AND OVER)
		BALANCED STONE WALL
		GUARD RAIL - STEEL POSTS
		GUARD RAIL - WOOD POSTS
		GUARD RAIL - DOUBLE FACE - STEEL POSTS
		GUARD RAIL - DOUBLE FACE - WOOD POSTS
		CHAIN LINK OR METAL FENCE
		WOOD FENCE
		SEDIMENT CONTROL BARRIER
		TREE LINE
		SAWCUT LINE
		TOP OR BOTTOM OF SLOPE
		LIMIT OF EDGE OF PAVEMENT OR COLD PLANE AND OVERLAY
		BANK OF RIVER OR STREAM
		BORDER OF WETLAND
		100 FT WETLAND BUFFER
		200 FT RIVERFRONT BUFFER
		STATE HIGHWAY LAYOUT
		TOWN OR CITY LAYOUT
		COUNTY LAYOUT
		RAILROAD SIDELINE
		TOWN OR CITY BOUNDARY LINE
		PROPERTY LINE OR APPROXIMATE PROPERTY LINE
		EASEMENT

TRAFFIC SYMBOLS

EXISTING	PROPOSED	DESCRIPTION
1	1	CONTROLLER PHASE ACTUATED
		TRAFFIC SIGNAL HEAD (SIZE AS NOTED)
		WIRE LOOP DETECTOR (6' x 6' TYP UNLESS OTHERWISE SPECIFIED)
		VIDEO DETECTION CAMERA
		MICROWAVE DETECTOR
		PEDESTRIAN PUSH BUTTON, SIGN (DIRECTIONAL ARROW AS SHOWN) AND SADDLE
	*	EMERGENCY PREEMPTION CONFIRMATION STROBE LIGHT
		VEHICULAR SIGNAL HEAD
		VEHICULAR SIGNAL HEAD, OPTICALLY PROGRAMMED
		FLASHING BEACON
		PEDESTRIAN SIGNAL HEAD, (TYPE AS NOTED OR AS SPECIFIED)
RRSG	RRSG	RAILROAD SIGNAL
OR		SIGNAL POST AND BASE (ALPHA-NUMERIC DESIGNATION NOTED)
	20'	MAST ARM, SHAFT AND BASE (ARM LENGTH AS NOTED)
		HIGH MAST POLE OR TOWER
		SIGN AND POST
		SIGN AND POST (2 POSTS)
	20'	MAST ARM WITH LUMINAIRE
		OPTICAL PRE-EMPTION DETECTOR
		CONTROL CABINET, GROUND MOUNTED
		CONTROL CABINET, POLE MOUNTED
		FLASHING BEACON CONTROL AND METER PEDESTAL
		LOAD CENTER ASSEMBLY
		PULL BOX 12"x12" (OR AS NOTED)
		ELECTRIC HANDHOLE 12"x24" (OR AS NOTED)
		TRAFFIC SIGNAL CONDUIT

PAVEMENT MARKINGS SYMBOLS

EXISTING	PROPOSED	DESCRIPTION
		PAVEMENT ARROW - WHITE
ONLY	ONLY	LEGEND "ONLY" - WHITE
	SL	STOP LINE, 24" WIDE
	CW	CROSSWALK
	SWL	SOLID WHITE LINE, 6" WIDE
	SYL	SOLID YELLOW LINE, 6" WIDE
	BWL	BROKEN WHITE LINE, 6" WIDE - 10' LINE - 30' GAP
	BYL	BROKEN YELLOW LINE, 6" WIDE - 10' LINE - 30' GAP
	DWL	DOTTED WHITE LINE, 6" WIDE - 3' LINE - 9' GAP
	DYL	DOTTED YELLOW LINE, 6" WIDE - 3' LINE - 9' GAP
	DWLEx	DOTTED WHITE LINE EXTENSION, 6" WIDE - 2' LINE - 6' GAP
	DYLEx	DOTTED YELLOW LINE EXTENSION, 6" WIDE - 2' LINE - 6' GAP
	DBWL	DOUBLE WHITE LINE, 6" WIDE
	DBYL	DOUBLE YELLOW LINE, 6" WIDE
	SYL	YELLOW TRANSVERSE LINE - 12" WIDTH - 30° @ 15' O.C.
		GUARD RAIL MOUNTED REFLECTORIZED DELINEATOR (W/B)

PROJECT DESCRIPTION

THIS PROJECT CONSISTS OF THE REPLACEMENT OF THE SUPERSTRUCTURE OF THE SINGLE-SPAN BRIDGE CARRYING RT-56 (LEICESTER STREET) OVER THE FRENCH RIVER. THE EXISTING ABUTMENTS AND WINGWALLS WILL BE RE-USED WITH MODIFICATIONS AS NEEDED TO SUPPORT THE NEW SUPERSTRUCTURE. THE NEW SUPERSTRUCTURE WIDTH WILL MATCH THE EXISTING BRIDGE, MAINTAINING ONE THROUGH LANE IN EACH DIRECTION AND A CENTER LEFT TURN LANE ON THE CURRENT HORIZONTAL AND VERTICAL ALIGNMENTS. THE ROADWAY APPROACHES WILL BE RECONSTRUCTED AS NEEDED AROUND THE BRIDGE WITH MILLING AND PAVING EXTENDING BEYOND STARTING AT THE INTERSECTION OF LEICESTER STREET AND COMINS ROAD/MILL STREET AT THE SOUTH AND EXTENDING APPROXIMATELY 350 FEET NORTH OF THE BRIDGE. OFF STRUCTURE DRAINAGE WILL BE UPGRADED WITH NEW CATCH BASINS AND GUARDRAIL WILL BE REPLACED WITHIN THE PROJECT LIMITS. UTILITIES WILL BE TEMPORARILY RELOCATED FOR CONSTRUCTION, AND TRAFFIC WILL BE DETOURED.

ABBREVIATIONS

GENERAL

AADT	ANNUAL AVERAGE DAILY TRAFFIC
ABAN	ABANDON
ADJ	ADJUST
APPROX.	APPROXIMATE
A.C.	ASPHALT CONCRETE
ACCM PIPE	ASPHALT COATED CORRUGATED METAL PIPE
BIT.	BITUMINOUS
BC	BOTTOM OF CURB
BD.	BOUND
BL	BASELINE
BLDG	BUILDING
BM	BENCHMARK
BO	BY OTHERS
BOS	BOTTOM OF SLOPE
BR.	BRIDGE
CB	CATCH BASIN
CBCI	CATCH BASIN WITH CURB INLET
CC	CEMENT CONCRETE
CCM	CEMENT CONCRETE MASONRY
CEM	CEMENT
CI	CURB INLET
CIP	CAST IRON PIPE
CLF	CHAIN LINK FENCE
CL	CENTERLINE
CMP	CORRUGATED METAL PIPE
CPP	CORRUGATED PLASTIC PIPE
CSP	CORRUGATED STEEL PIPE
CO.	COUNTY
CONC	CONCRETE
CONT	CONTINUOUS
CONST	CONSTRUCTION
CR GR	CROWN GRADE
DHV	DESIGN HOURLY VOLUME
DI	DROP INLET
DIA	DIAMETER
DIP	DUCTILE IRON PIPE
DW	STEADY DON'T WALK - PORTLAND ORANGE
DWY	DRIVEWAY
ELEV (or EL.)	ELEVATION
EMB	EMBANKMENT
EOP	EDGE OF PAVEMENT
EXIST (or EX)	EXISTING
EXC	EXCAVATION
F&C	FRAME AND COVER
F&G	FRAME AND GRATE
FDN.	FOUNDATION
FES	FLARED END SECTION
FLDSTN	FIELDSTONE
GAR	GARAGE
GD	GROUND
GG	GAS GATE
GI	GUTTER INLET
GIP	GALVANIZED IRON PIPE
GRAN	GRANITE
GRAV	GRAVEL
GRD	GUARD
HDW	HEADWALL
HMA	HOT MIX ASPHALT
HOR	HORIZONTAL
HYD	HYDRANT
INV	INVERT
JCT	JUNCTION
L	LENGTH OF CURVE
LB	LEACH BASIN
LP	LIGHT POLE
LT	LEFT
MAX	MAXIMUM
MB	MAILBOX
MH	MANHOLE
MHB	MASSACHUSETTS HIGHWAY BOUND
MIN	MINIMUM
NIC	NOT IN CONTRACT
NO.	NUMBER
PC	POINT OF CURVATURE
PCC	POINT OF COMPOUND CURVATURE
PCPP	PERFORATED CORRUGATED PLASTIC PIPE
PCR	PEDESTRIAN CURB RAMP
P.G.L.	PROFILE GRADE LINE
PI	POINT OF INTERSECTION
POC	POINT ON CURVE
POT	POINT ON TANGENT
PRC	POINT OF REVERSE CURVATURE
PROJ	PROJECT
PROP	PROPOSED
PSB	PLANTABLE SOIL BORROW
PT	POINT OF TANGENCY
PVC	POINT OF VERTICAL CURVATURE

OXFORD
LEICESTER STREET/RT 56

STATE	FED. AID PROJ. NO.	SHEET NO.	TOTAL SHEETS
MA	HIP(NGB)-004S(015)X	2	66
PROJECT FILE NO.	605323		

LEGEND & ABBREVIATIONS

ABBREVIATIONS (cont.)

GENERAL

PVI	POINT OF VERTICAL INFLECTION
PVMT	PAVEMENT
PVT	POINT OF VERTICAL TANGENCY
PWW	PAVED WATER WAY
R	RADIUS OF CURVATURE
R&D	REMOVE AND DISPOSE
RCP	REINFORCED CONCRETE PIPE
RD	ROAD
RDWY	ROADWAY
REM	REMOVE
RET	RETAIN
RET WALL	RETAINING WALL
ROW	RIGHT OF WAY
RR	RAILROAD
R&R	REMOVE AND RESET
R&S	REMOVE AND STACK
RT	RIGHT
SB	STONE BOUND
SHLD	SHOULDER
SMH	SEWER MANHOLE
ST	STREET
STA	STATION
SSD	STOPPING SIGHT DISTANCE
SHLO	STATE HIGHWAY LAYOUT LINE
SW	SIDEWALK
T	TANGENT DISTANCE OF CURVE/TRUCK %
TAN	TANGENT
TEMP	TEMPORARY
TC	TOP OF CURB
TOS	TOP OF SLOPE
TYP	TYPICAL
UP	UTILITY POLE
VAR	VARIES
VERT	VERTICAL
VC	VERTICAL CURVE
WG	WATER GATE
WIP	WROUGHT IRON PIPE
WM	WATER METER/WATER MAIN
X-SECT	CROSS SECTION

TRAFFIC SIGNAL ABBREVIATIONS

CAB	CABINET
CCVE	CLOSED CIRCUIT VIDEO EQUIPMENT
DW	STEADY UPRAISED HAND
FDW	FLASHING UPRAISED HAND
FR	FLASHING CIRCULAR RED
FRL	FLASHING RED LEFT ARROW
FRR	FLASHING RED RIGHT ARROW
FY	FLASHING CIRCULAR YELLOW
FYL	FLASHING YELLOW LEFT ARROW
FYR	FLASHING YELLOW RIGHT ARROW
G	STEADY CIRCULAR GREEN
GL	STEADY GREEN LEFT ARROW
GR	STEADY GREEN RIGHT ARROW
GSL	STEADY GREEN SLASH LEFT ARROW
GSR	STEADY GREEN SLASH RIGHT ARROW
GV	STEADY GREEN VERTICAL ARROW
OL	OVERLAP
PED	PEDESTRIAN
PTZ	PAN, TILT, ZOOM
R	STEADY CIRCULAR RED
RL	STEADY RED LEFT ARROW
RR	STEADY RED RIGHT ARROW
TR SIG	TRAFFIC SIGNAL
TSC	TRAFFIC SIGNAL CONDUIT
W	STEADY WALKING PERSON
Y	STEADY CIRCULAR YELLOW
YL	STEADY YELLOW LEFT ARROW

605323_HDLEGEND&ABBREVIATIONS).DWG Plotted on 3-Sep-2026 8:35 AM

605323_HD(NOTES).DWG Plotted on 3-Sep-2026 8:36 AM

GENERAL NOTES

1. PRIOR TO THE START OF CONSTRUCTION, THE CONTRACTOR SHALL SUBMIT FOR REVIEW A SCHEDULE OF OPERATIONS IN ADDITION TO OTHER CONTRACT REQUIREMENTS TO THE ENGINEER.

2. COORDINATES, IN U.S. SURVEY FEET, ARE IN THE MASSACHUSETTS STATE PLANE COORDINATE SYSTEM (MCS), MAINLAND ZONE, REFERENCED TO THE NORTH AMERICAN DATUM OF 1983, (NAD 83/2011, EPOCH 2010.00), BASED ON THE KeyNetGPS VIRTUAL REFERENCE SYSTEM (VRS).

3. ELEVATIONS, IN U.S. SURVEY FEET, ARE REFERENCED TO THE NORTH AMERICAN VERTICAL DATUM OF 1988 (NAVD88) BASED ON THE KeyNetGPS VIRTUAL REFERENCE SYSTEM (VRS)

4. SUBSURFACE UTILITY LINES AND FEATURES, AS SHOWN HEREON, WERE COMPILED FROM FIELD EVIDENCE AND/OR AVAILABLE RECORD INFORMATION (SEE REFERENCES), AND THEIR LOCATIONS ARE ONLY APPROXIMATE. ACTUAL LOCATIONS MUST BE DETERMINED IN THE FIELD.

   DAWOOD ASSUMES NO RESPONSIBILITY FOR DAMAGES INCURRED AS AS RESULT OF UTILITIES OMITTED OR INACCURATELY SHOWN.

   BEFORE DESIGNING FUTURE CONNECTIONS, THE APPROPRIATE UTILITIES MUST BE CONSULTED.

   BEFORE CONSTRUCTION, ALL UTILITIES, PUBLIC AND PRIVATE, MUST BE NOTIFIED (SEE MASSACHUSETTS GENERAL LAWS, CHAPTER 82 SECTION 40). CALL "DIG SAFE" 1-888-DIG-SAFE. (888-344-7233).

5. BEFORE SAWCUTTING, EXCAVATING, BACK FILLING, GRADING, PAVEMENT RESTORATION, OR REPAIRING, ALL UTILITY COMPANIES, PUBLIC AND PRIVATE, MUST BE CONTACTED, INCLUDING THOSE IN CONTROL OF UTILITIES NOT SHOWN ON THESE PLANS. SEE CHAPTER 370, ACT OF 1963, MASSACHUSETTS GENERAL LAWS. THE OWNER AND ENGINEER ASSUME NO RESPONSIBILITY FOR DAMAGES INCURRED AS A RESULT OF UTILITIES OMITTED OR INACCURATELY SHOWN. BEFORE PLANNING FUTURE CONNECTIONS, THE APPROPRIATE UTILITY ENGINEERING DEPARTMENT MUST BE CONSULTED. DIG SAFE AT 811 OR 1-(888) DIG-SAFE. REFER TO THE SPECIAL PROVISIONS FOR A LIST OF THE CONTACT PERSONS AT AFFECTED UTILITIES.

6. CONSTRUCTION WORK THAT WILL IMPACT EXISTING TRAVEL LANES SHALL BE PERFORMED IN A MANNER APPROVED BY THE ENGINEER.

7. THE CONTRACTOR SHALL EXCAVATE TEST PITS TO VERIFY LOCATIONS OF EXISTING UTILITIES AS INDICATED OR AS DIRECTED BY THE ENGINEER.

8. NO EXISTING PUBLIC UTILITY STRUCTURES SHALL BE ABANDONED AND/OR DISMANTLED WITHOUT AUTHORIZATION FROM THE ENGINEER.

9. THE CONTRACTOR SHALL PROVIDE METHODS DURING DEWATERING OPERATIONS AND FOR STORM WATER RUNOFF NOT TO ALLOW SILT OR DEBRIS TO ENTER EXISTING DRAINAGE FACILITIES OR CREATE NUISANCES. THE CONTRACTOR SHALL BE RESPONSIBLE FOR CLEANING EXISTING OR NEW FACILITIES IF SILTATION OCCURS DUE TO THE CONTRACTOR'S OPERATIONS.

10. FINAL LOCATION OF TRAFFIC SIGNS AND SUPPORTS SHALL BE DETERMINED IN THE FIELD BY THE ENGINEER.

11. DAMAGE OF PROPERTY BEYOND THE WORK LIMITS CAUSED BY THE CONTRACTOR'S OPERATIONS SHALL BE REPAIRED BY THE CONTRACTOR AT THE CONTRACTOR'S EXPENSE, SUBJECT TO THE APPROVAL OF THE ENGINEER.

12. THE CONTRACTOR SHALL DISPOSE OF ALL WASTE MATERIAL IN ACCORDANCE WITH ALL FEDERAL, STATE AND LOCAL REGULATIONS AT HIS OWN EXPENSE IF NOT OTHERWISE SPECIFIED, OUTSIDE OF THE PROJECT LIMITS.

13. IF THE CONTRACTOR DAMAGES UTILITY SERVICES, HE SHALL IMMEDIATELY NOTIFY THE RESPECTIVE UTILITY COMPANY AND SHALL IMMEDIATELY PROVIDE ACCESS TO THE UTILITY COMPANY SO THEY CAN REPLACE OR REPAIR THE DAMAGE.

14. SAFETY CONTROLS FOR CONSTRUCTION OPERATIONS SHALL BE IN ACCORDANCE WITH THE LATEST EDITION OF THE MANUAL ON UNIFORM TRAFFIC CONTROL DEVICES (MUTCD), THE MASSDOT MUTCD AND THE SPECIAL PROVISIONS.

15. THE CONTRACTOR SHALL TAKE EVERY PRECAUTION TO PROTECT ALL EXISTING TREES AND ROOTS THAT ARE NOT DESIGNATED FOR REMOVAL.

16. NO ALTERATION SHALL BE UNDERTAKEN WHICH DECREASES OR HAS THE EFFECT OF DECREASING ACCESSIBILITY OR USABILITY OF A FACILITY BELOW THE REQUIREMENTS FOR NEW CONSTRUCTION.

17. ALL AREAS OUTSIDE OF THE LIMIT OF WORK DISTURBED BY THE CONTRACTOR'S OPERATIONS SHALL BE RESTORED TO THEIR ORIGINAL CONDITION BY THE CONTRACTOR AT THE CONTRACTOR'S OWN EXPENSE.

18. NO WORKERS OR EQUIPMENT ARE PERMITTED ON LAND N/F DAVID COOPER.

UTILITY NOTES

1. ALL UNDERGROUND UTILITIES AS SHOWN WERE COMPILED USING FIELD SURVEY INFORMATION AND AVAILABLE RECORD INFORMATION.

2. RECORD UTILITY INFORMATION FROM THE VARIOUS UTILITY COMPANIES AND PUBLIC AGENCIES, ARE APPROXIMATE ONLY AND ACTUAL LOCATIONS MUST BE DETERMINED IN THE FIELD.

3. ALL UTILITY COMPANIES, PUBLIC AND PRIVATE MUST BE NOTIFIED, INCLUDING THOSE IN CONTROL OF UTILITIES NOT SHOWN ON THIS PLAN, (SEE CHAPTER 370, ACTS OF 1963, MASSACHUSETTS) PRIOR TO DESIGNING, EXCAVATING, BLASTING, INSTALLING, BACKFILLING, GRADING, PAVEMENT RESTORING OR REPAVING.

OXFORD
LEICESTER STREET/RT 56

STATE	FED. AID PROJ. NO.	SHEET NO.	TOTAL SHEETS
MA	HIP(NGB)-004S(015)X	4	66
PROJECT FILE NO.	605323		

KEY PLAN

LEGEND

- (X) CONSTRUCTION PLANS
- [X] PROFILES
- (X) GRADING & TIE PLANS
- ◇X SIGNING & PAVEMENT MARKING PLANS
- ⬡X UTILITY & DRAINAGE PLANS

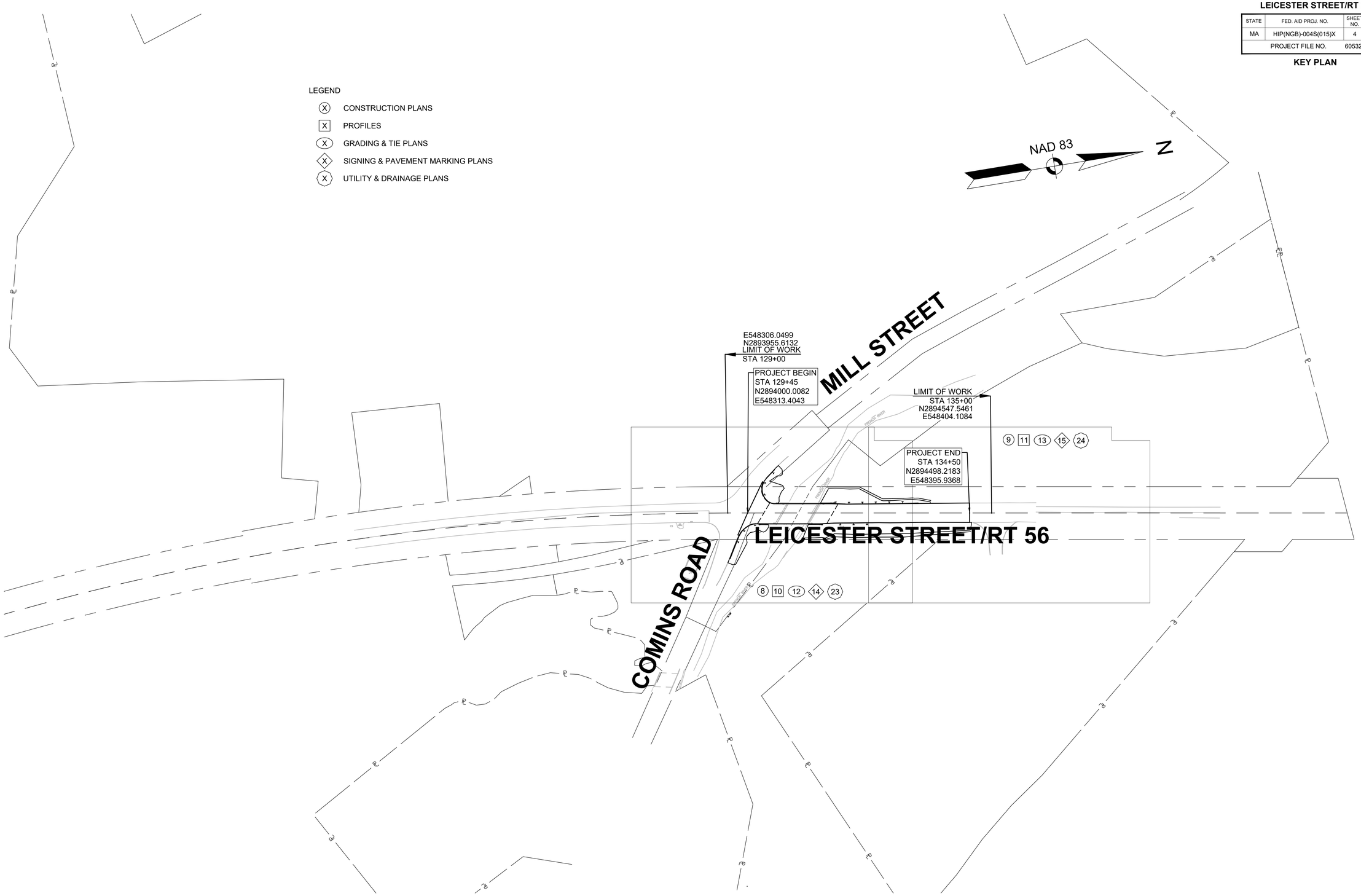

605323_HD(KEYPLAN).DWG Plotted on 3-Sep-2026 8:36 AM

OXFORD
LEICESTER STREET/RT 56

STATE	FED. AID PROJ. NO.	SHEET NO.	TOTAL SHEETS
MA	HIP(NGB)-004S(015)X	5	66
PROJECT FILE NO.	605323		

TYPICAL SECTIONS

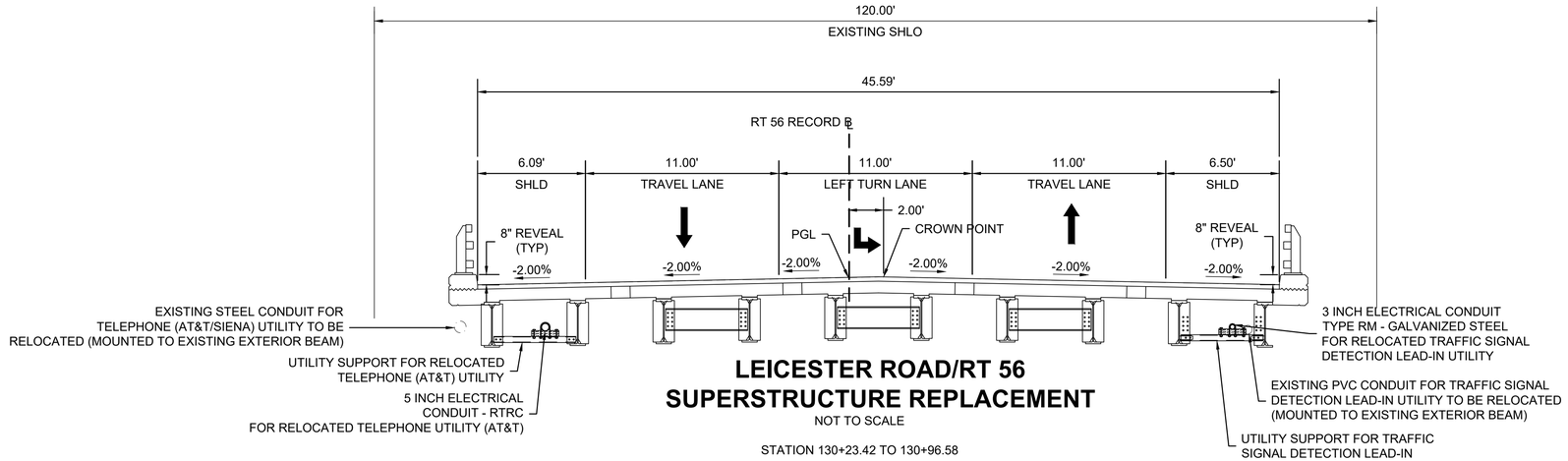

LEICESTER ROAD/RT 56
SUPERSTRUCTURE REPLACEMENT

NOT TO SCALE

STATION 130+23.42 TO 130+96.58

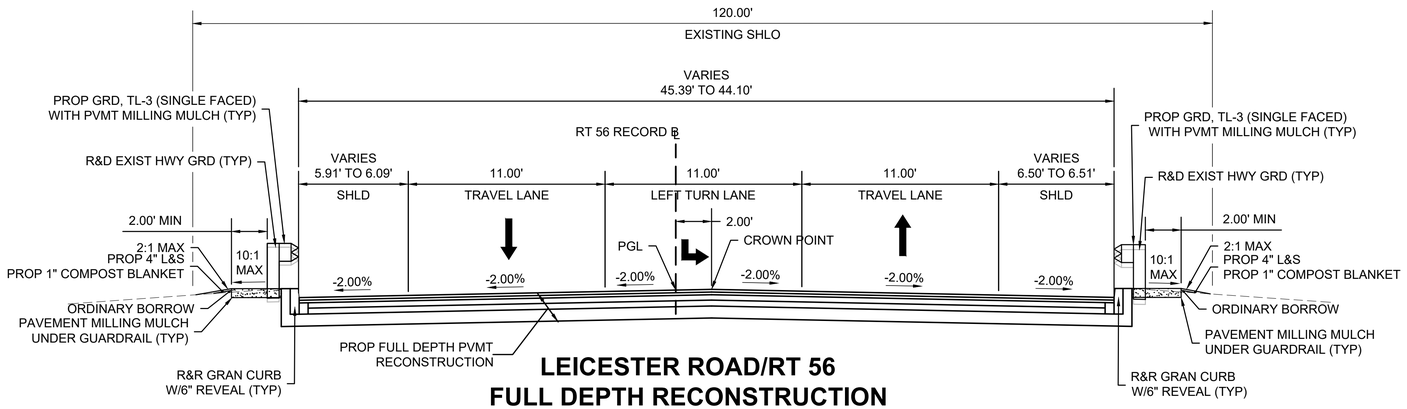

LEICESTER ROAD/RT 56
FULL DEPTH RECONSTRUCTION

NOT TO SCALE

STATION 129+82.00 TO 130+23.42
STATION 130+96.58 TO 131+39.00

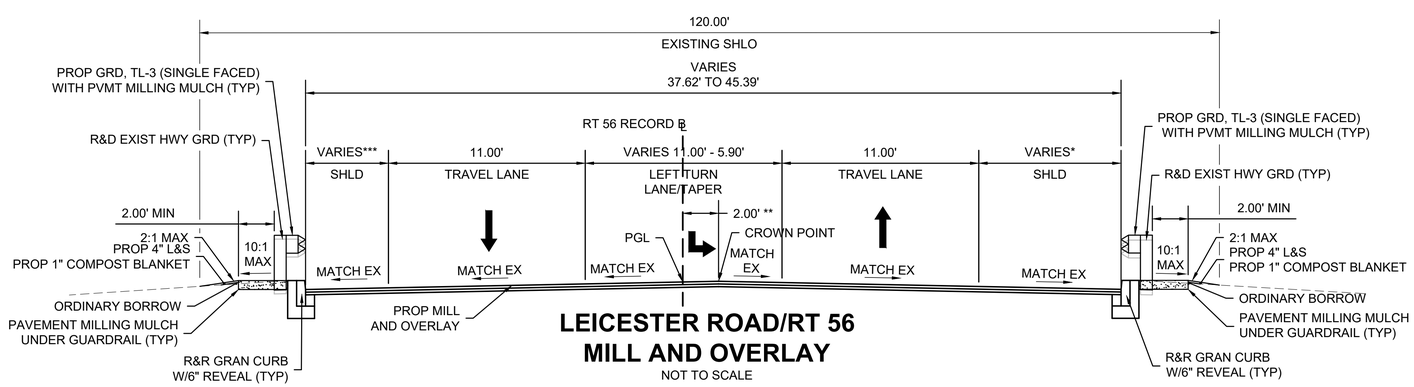

LEICESTER ROAD/RT 56
MILL AND OVERLAY

NOT TO SCALE

STATION 129+45.00 TO 129+82.00
STATION 131+39.00 TO 134+50.00

* - VARIES FROM 2.53' TO 6.51' STA 129+45.00 TO 129+82.00
- VARIES FROM 6.51' TO 6.53' STA 131+39.00 TO 134+50.00
** - VARIES FROM 2.00' TO 0.00' STA 132+50.00 TO 134+50.00
*** - VARIES FROM 2.09' TO 5.91' STA 129+45.00 TO 129+82.00
- VARIES FROM 4.59' TO 7.83' STA 131+39.00 TO 134+50.00

PAVEMENT DESIGN

PROPOSED FULL DEPTH PAVEMENT

1.75" SUPERPAVE SURFACE COURSE - 12.5 POLYMER (SSC-12.5 P) OVER ASPHALT EMULSION FOR TACK COAT OVER
2.25" SUPERPAVE INTERMEDIATE COURSE - 19.0 (SIC-19.0) OVER ASPHALT EMULSION FOR TACK COAT OVER
5.00" SUPERPAVE BASE COURSE - 37.5 (SBC-37.5) OVER
4.00" DENSE GRADED CRUSHED STONE FOR SUBBASE OVER
8.00" GRAVEL BORROW (TYPE D)

PROPOSED MILLING AND OVERLAY

1.75" SUPERPAVE SURFACE COURSE - 12.5 POLYMER (SSC - 12.5 P) OVER ASPHALT EMULSION FOR TACK COAT OVER
2.25" SUPERPAVE INTERMEDIATE COURSE -19.0 (SIC - 19.0) OVER ASPHALT EMULSION FOR TACK COAT OVER
4.00" PAVEMENT FINE MILLING

PROPOSED BRIDGE DECK

1.50" SUPERPAVE BRIDGE SURFACE COURSE - 9.5 POLYMER (SSC-B - 9.5 - P) OVER ASPHALT EMULSION FOR TACK COAT OVER
1.50" SUPERPAVE BRIDGE PROTECTIVE COURSE - 9.5 POLYMER (SPC-B - 9.5 -P) OVER ASPHALT EMULSION FOR TACK COAT (INCIDENTAL TO MEMBRANE WATERPROOFING) OVER MEMBRANE WATER PROOFING FOR BRIDGE DECKS.

GENERAL NOTES

1. ASPHALT EMULSION FOR TACK COAT SHALL BE SPRAY APPLIED FOR UNIFORM COVERAGE IN ACCORDANCE WITH SECTION 450.
2. HMA JOINT SEALANT SHALL BE APPLIED TO ALL PAVEMENT JOINTS AND ALONG ADJOINING EDGES SUCH AS CURB, CASTINGS AND SAWCUTS PRIOR TO PLACING SURFACE COURSE.
3. TOLERANCE FOR CONSTRUCTION 0.5%±

CUT/FILL SLOPES

MAX 2:1

605323_HD(TYPICALS).DWG Plotted on 3-Sep-2026 8:37 AM

OXFORD
LEICESTER STREET/RT 56

STATE	FED. AID PROJ. NO.	SHEET NO.	TOTAL SHEETS
MA	HIP(NGB)-004S(015)X	6	66
PROJECT FILE NO.	605323		

GUARDRAIL DETAIL

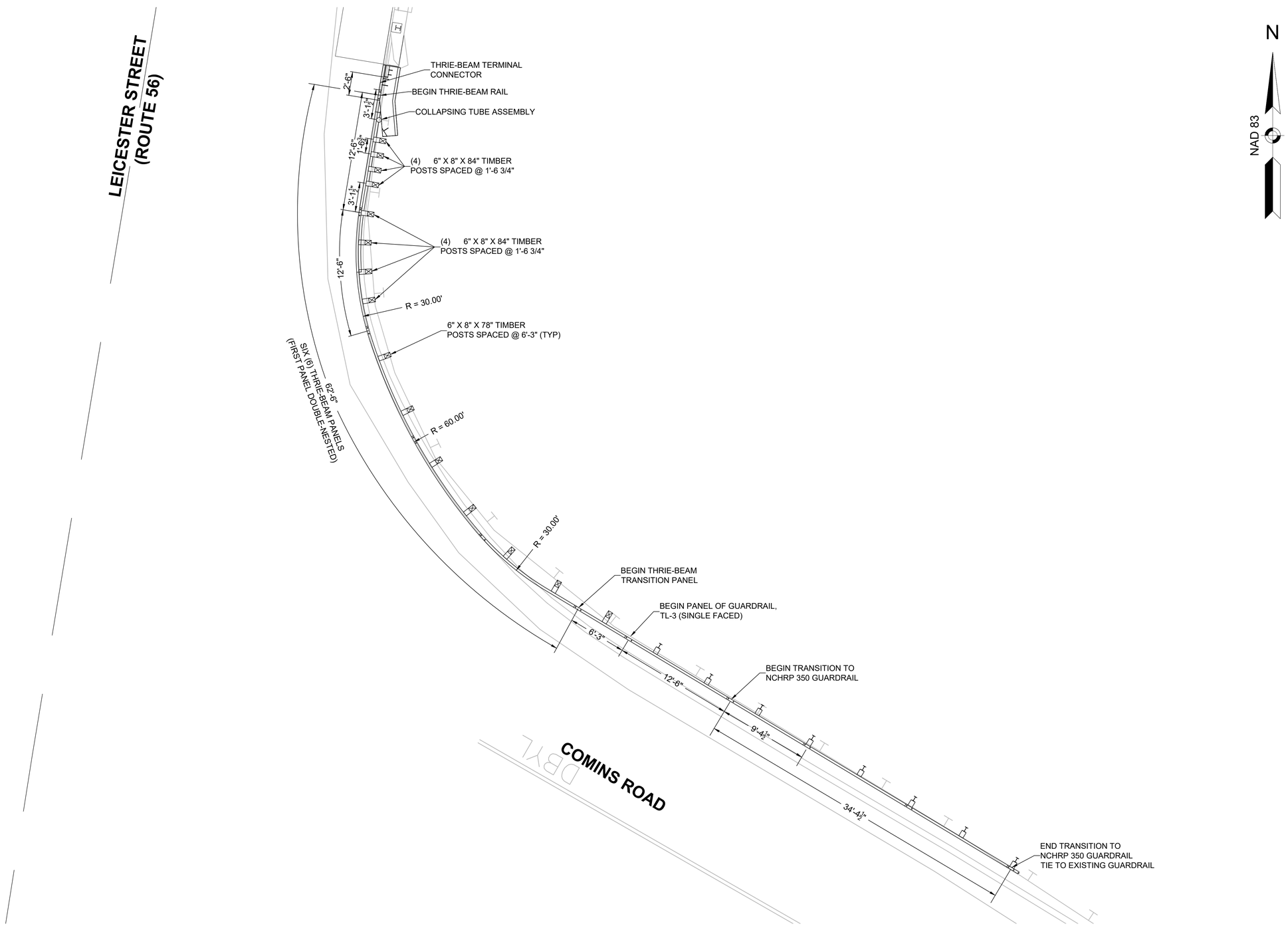

MODIFIED TRANSITION TO BRIDGE RAIL #1

0 5 10 15 20

SCALE: 1" = 5'

605323_HD(GUARDRAIL).DWG Plotted on 3-Sep-2026 8:38 AM

OXFORD
LEICESTER STREET/RT 56

STATE	FED. AID PROJ. NO.	SHEET NO.	TOTAL SHEETS
MA	HIP(NGB)-004S(015)X	7	66
PROJECT FILE NO.	605323		

GUARDRAIL DETAIL

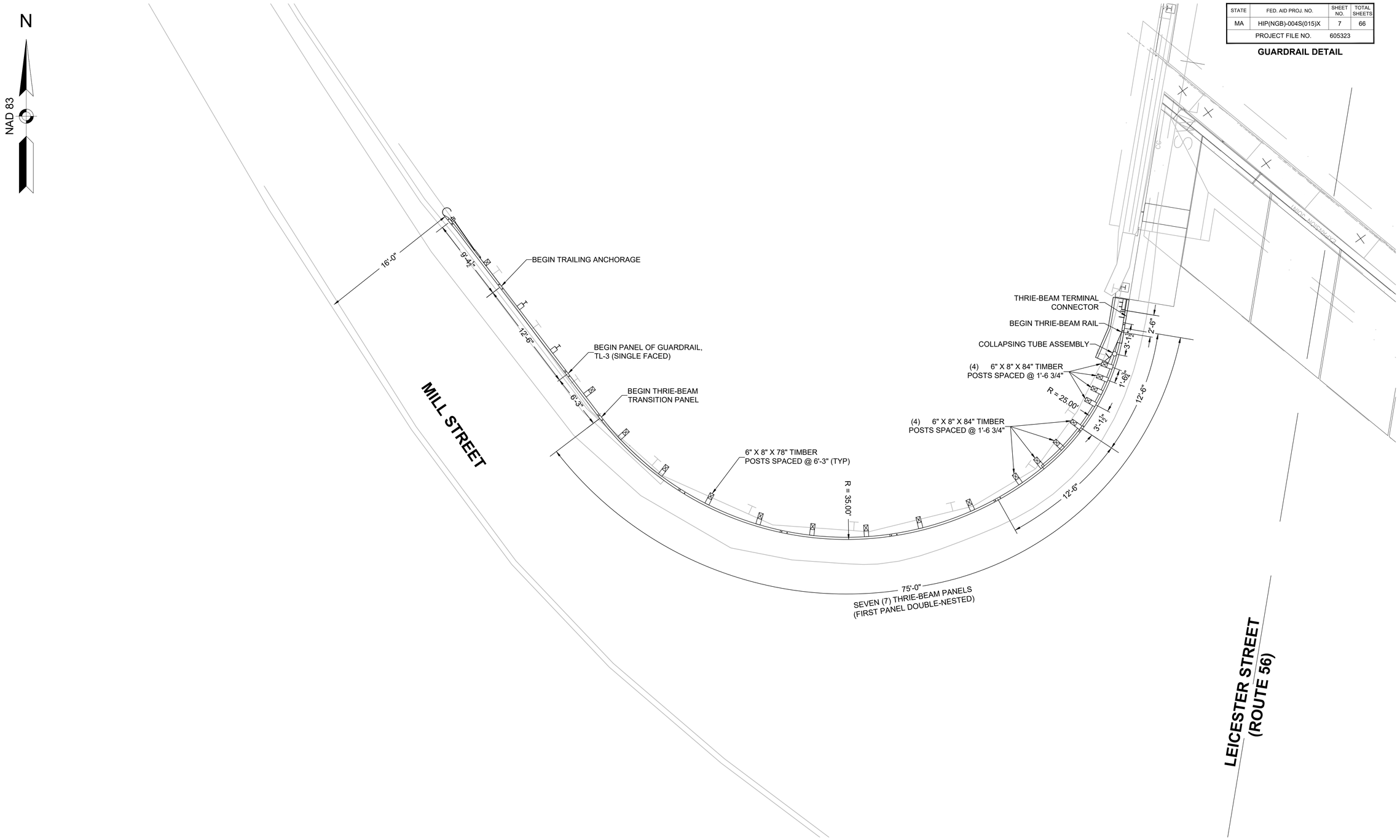

MODIFIED TRANSITION TO BRIDGE RAIL #2

0 5 10 15 20
SCALE: 1" = 5'

605323_HD(GUARDRAIL).DWG Plotted on 3-Sep-2026 8:38 AM

HIGHWAY GUARD DETAILS	TRAFFIC SIGNAL CONDUIT	WATER SUPPLY ALTERATIONS	DRAINAGE DETAILS
SEE BELOW	NONE	NONE	SEE BELOW

DRAINAGE STRUCTURE DATA						
NO.	TYPE	STA	RIM ELEV.	INV. ELEV. IN	INV. ELEV. OUT	REMARKS
1	PROP DEEP SUMP CB	129+64.44 23.37' RT	659.08'	--	650.60'	DEEP SUMP CATCH BASIN TO BE INSTALLED

OXFORD
LEICESTER STREET/RT 56

STATE	FED. AID PROJ. NO.	SHEET NO.	TOTAL SHEETS
MA	HIP(NGB)-004S(015)X	8	66
PROJECT FILE NO.	605323		

CONSTRUCTION PLANS

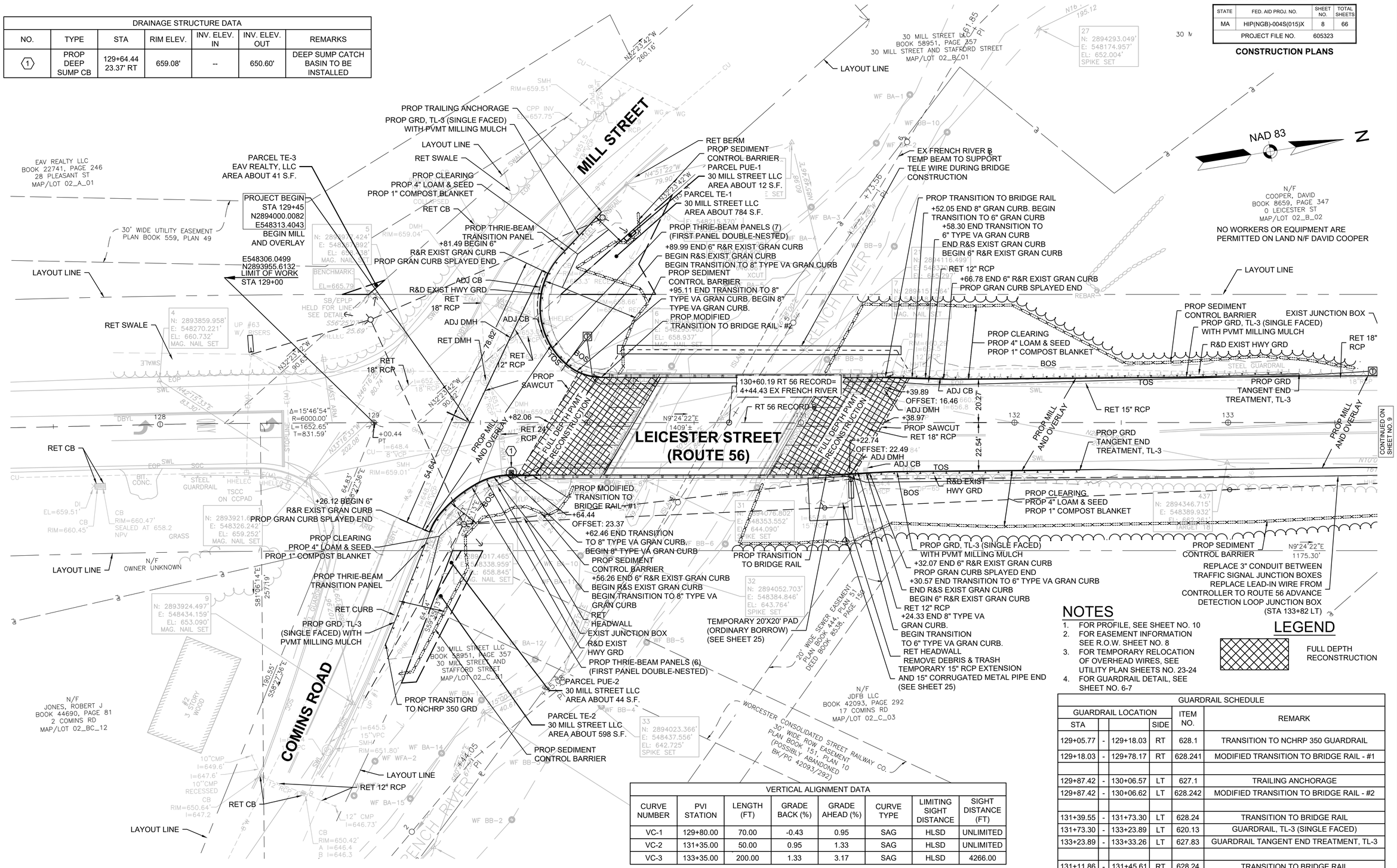

VERTICAL ALIGNMENT DATA							
CURVE NUMBER	PVI STATION	LENGTH (FT)	GRADE BACK (%)	GRADE AHEAD (%)	CURVE TYPE	LIMITING SIGHT DISTANCE	SIGHT DISTANCE (FT)
VC-1	129+80.00	70.00	-0.43	0.95	SAG	HLSD	UNLIMITED
VC-2	131+35.00	50.00	0.95	1.33	SAG	HLSD	UNLIMITED
VC-3	133+35.00	200.00	1.33	3.17	SAG	HLSD	4266.00

0 20 50 100
SCALE: 1" = 20'

NOTES

1. FOR PROFILE, SEE SHEET NO. 10
2. FOR EASEMENT INFORMATION SEE R.O.W. SHEET NO. 8
3. FOR TEMPORARY RELOCATION OF OVERHEAD WIRES, SEE UTILITY PLAN SHEETS NO. 23-24
4. FOR GUARDRAIL DETAIL, SEE SHEET NO. 6-7

LEGEND

FULL DEPTH RECONSTRUCTION

GUARDRAIL SCHEDULE					
GUARDRAIL LOCATION				ITEM NO.	REMARK
STA			SIDE		
129+05.77	-	129+18.03	RT	628.1	TRANSITION TO NCHRP 350 GUARDRAIL
129+18.03	-	129+78.17	RT	628.241	MODIFIED TRANSITION TO BRIDGE RAIL - #1
129+87.42	-	130+06.57	LT	627.1	TRAILING ANCHORAGE
129+87.42	-	130+06.62	LT	628.242	MODIFIED TRANSITION TO BRIDGE RAIL - #2
131+39.55	-	131+73.30	LT	628.24	TRANSITION TO BRIDGE RAIL
131+73.30	-	133+23.89	LT	620.13	GUARDRAIL, TL-3 (SINGLE FACED)
133+23.89	-	133+33.26	LT	627.83	GUARDRAIL TANGENT END TREATMENT, TL-3
131+11.86	-	131+45.61	RT	628.24	TRANSITION TO BRIDGE RAIL
131+45.61	-	132+21.18	RT	620.13	GUARDRAIL, TL-3 (SINGLE FACED)
132+21.18	-	132+30.56	RT	627.83	GUARDRAIL TANGENT END TREATMENT, TL-3

605323_HD(CONSTPLN).DWG Plotted on 3-Sep-2026 8:38 AM

HIGHWAY GUARD DETAILS	TRAFFIC SIGNAL CONDUIT	WATER SUPPLY ALTERATIONS	DRAINAGE DETAILS
NONE	NONE	NONE	NONE

OXFORD
LEICESTER STREET/RT 56

STATE	FED. AID PROJ. NO.	SHEET NO.	TOTAL SHEETS
MA	HIP(NGB)-004S(015)X	9	66
PROJECT FILE NO.	605323		

CONSTRUCTION PLANS

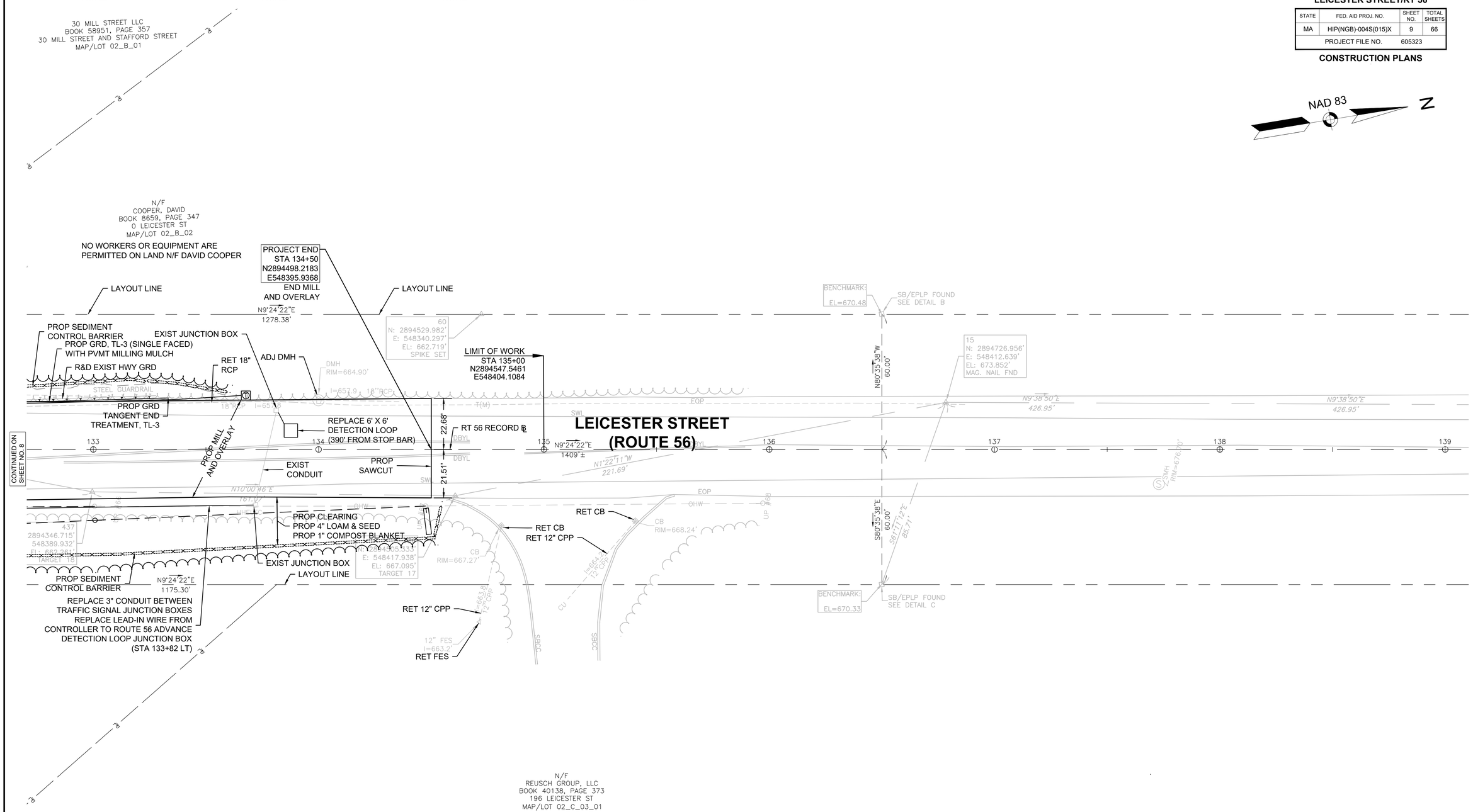

VERTICAL ALIGNMENT DATA							
CURVE NUMBER	PVI STATION	LENGTH (FT)	GRADE BACK (%)	GRADE AHEAD (%)	CURVE TYPE	LIMITING SIGHT DISTANCE	SIGHT DISTANCE (FT)
VC-3	133+35.00	200.00	1.33	3.17	SAG	HLSD	4266.00

FOR PROFILE: SEE SHEET 11

605323_HD(CONSTPLN).DWG Plotted on 3-Sep-2026 8:38 AM

OXFORD
LEICESTER STREET/RT 56

STATE	FED. AID PROJ. NO.	SHEET NO.	TOTAL SHEETS
MA	HIP(NGB)-004S(015)X	10	66
PROJECT FILE NO.	605323		

RT 56 PROFILE

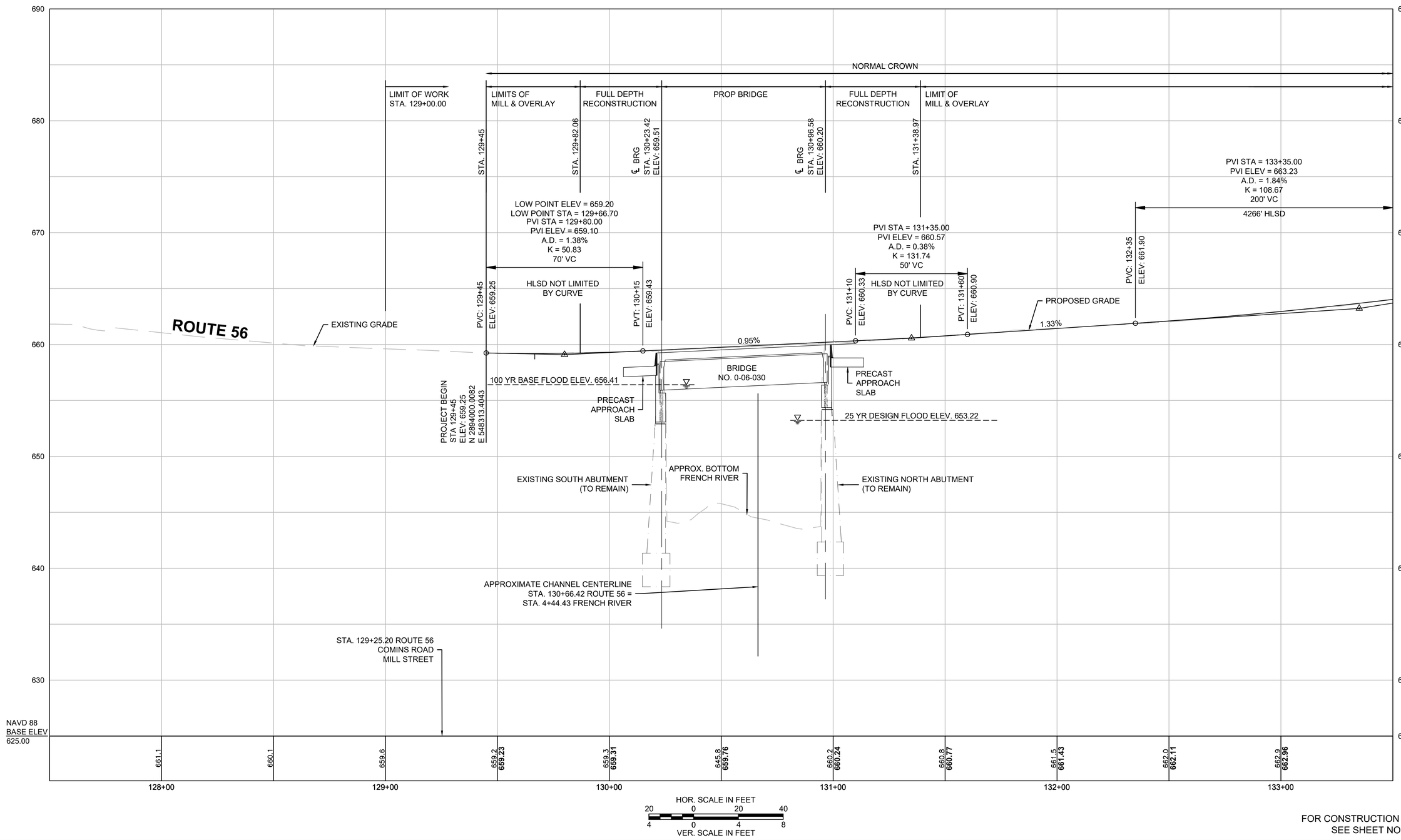

CONTINUED ON
SHEET NO. 11

FOR CONSTRUCTION PLAN:
SEE SHEET NO. 8

605323_HD(PROFILES).DWG Plotted on 3-Sep-2026 8:39 AM

OXFORD
LEICESTER STREET/RT 56

STATE	FED. AID PROJ. NO.	SHEET NO.	TOTAL SHEETS
MA	HIP(NGB)-004S(015)X	11	66
PROJECT FILE NO.	605323		

RT 56 PROFILE

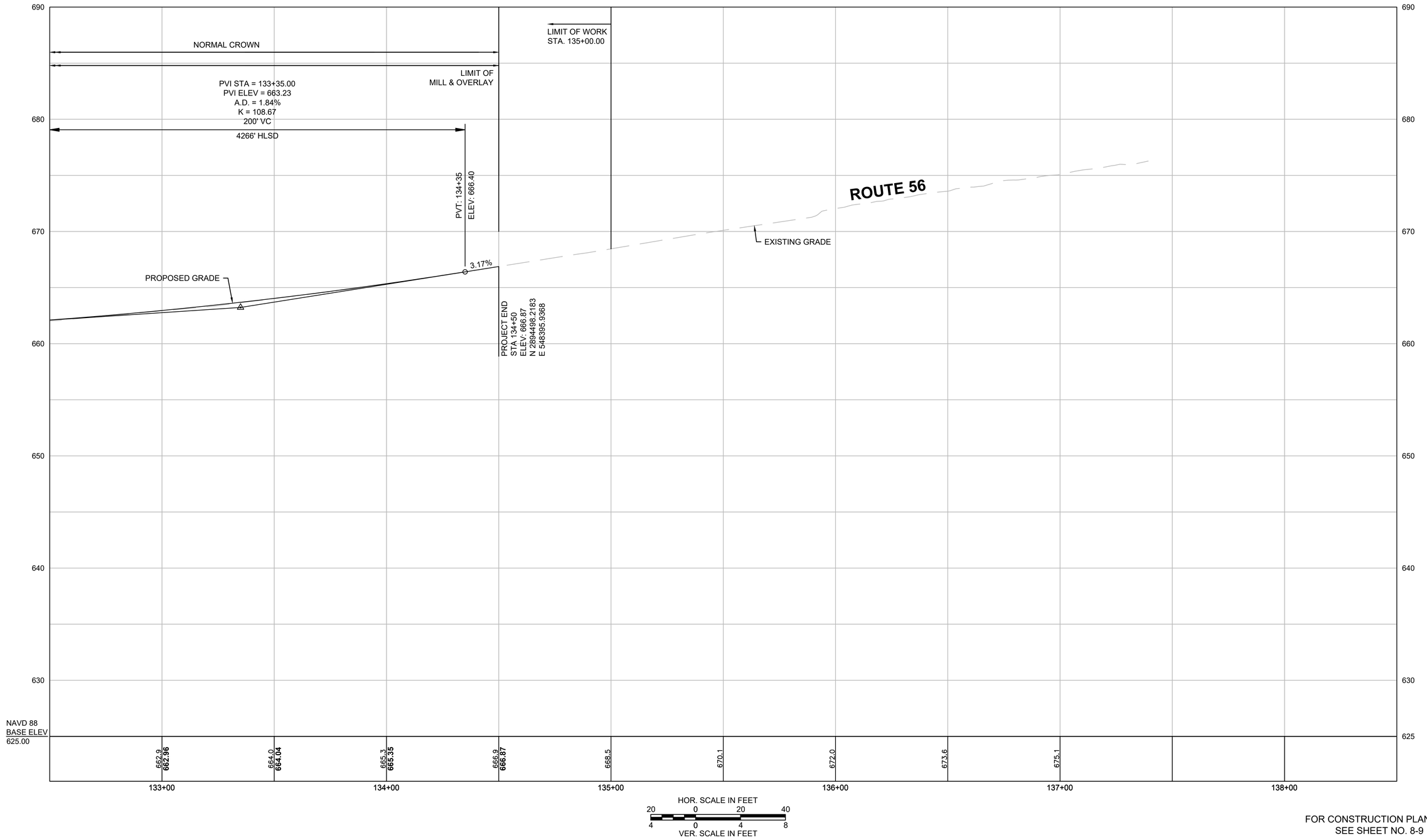

FOR CONSTRUCTION PLAN:
SEE SHEET NO. 8-9

605323_HD(PROFILES).DWG Plotted on 3-Sep-2026 8:39 AM

OXFORD
LEICESTER STREET/RT 56

STATE	FED. AID PROJ. NO.	SHEET NO.	TOTAL SHEETS
MA	HIP(NGB)-004S(015)X	12	66
PROJECT FILE NO.	605323		

CURB TIE & GRADING PLANS

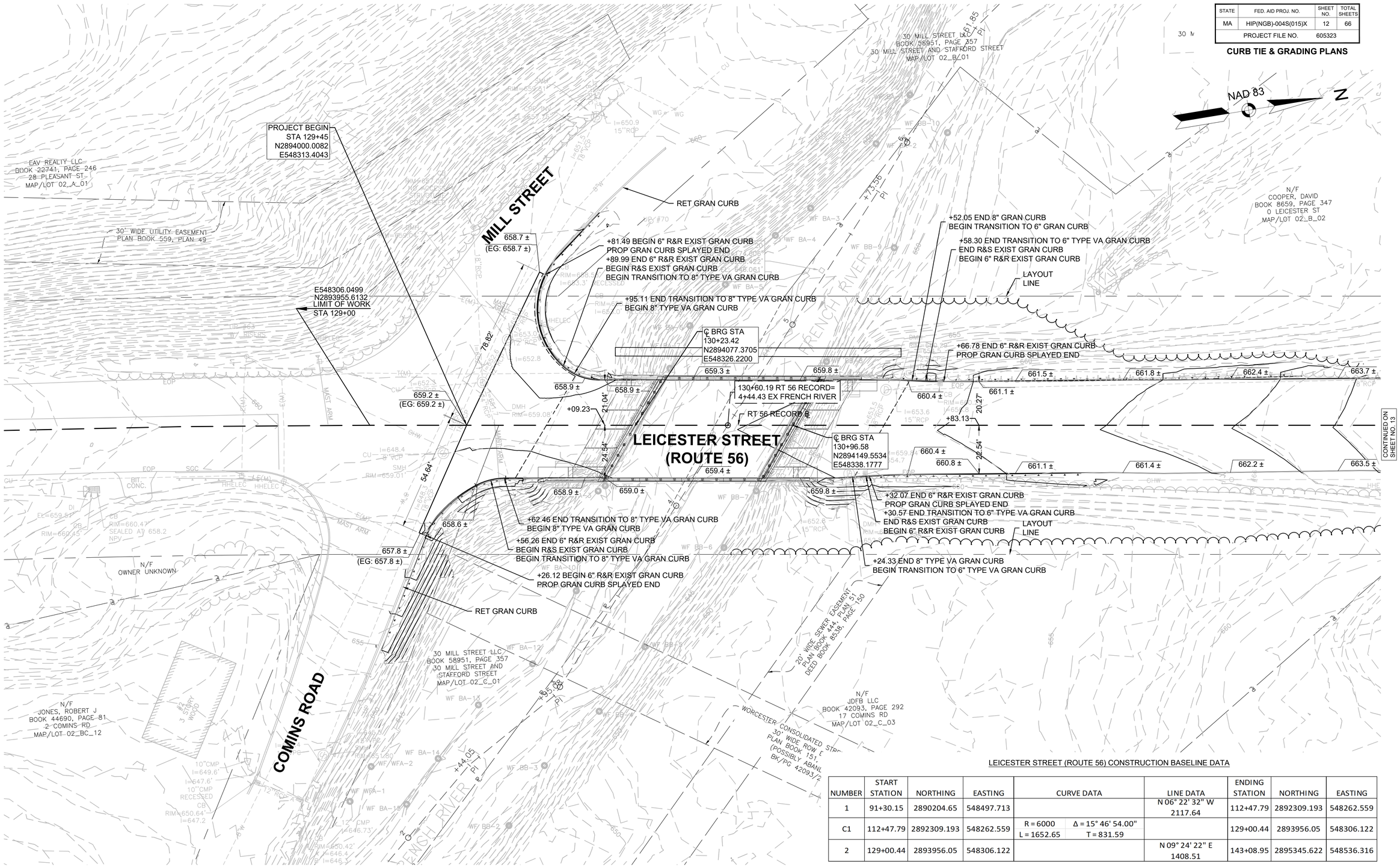

LEICESTER STREET (ROUTE 56) CONSTRUCTION BASELINE DATA

NUMBER	START STATION	NORTHING	EASTING	CURVE DATA		LINE DATA	ENDING STATION	NORTHING	EASTING
1	91+30.15	2890204.65	548497.713			N 06° 22' 32" W 2117.64	112+47.79	2892309.193	548262.559
C1	112+47.79	2892309.193	548262.559	R = 6000 L = 1652.65	Δ = 15° 46' 54.00" T = 831.59		129+00.44	2893956.05	548306.122
2	129+00.44	2893956.05	548306.122			N 09° 24' 22" E 1408.51	143+08.95	2895345.622	548536.316

0 20 50 100
SCALE: 1" = 20'

605323_HD(GRADE-TIE).DWG Plotted on 3-Sep-2026 8:39 AM

OXFORD
LEICESTER STREET/RT 56

STATE	FED. AID PROJ. NO.	SHEET NO.	TOTAL SHEETS
MA	HIP(NGB)-004S(015)X	13	66
PROJECT FILE NO.	605323		

CURB TIE & GRADING PLANS

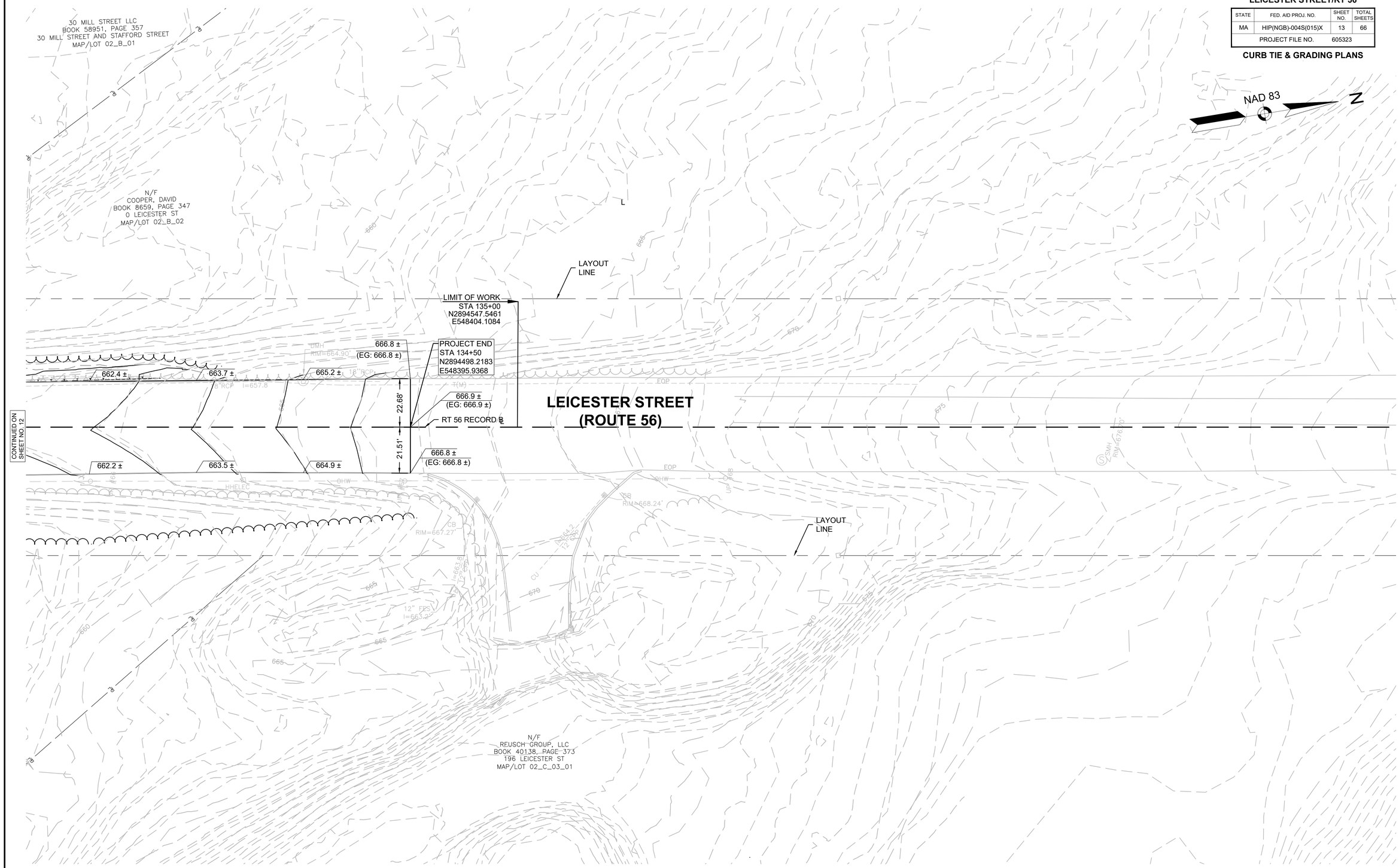

605323_HD(GRADE-TIE).DWG Plotted on 3-Sep-2026 8:40 AM

OXFORD
LEICESTER STREET/RT 56

STATE	FED. AID PROJ. NO.	SHEET NO.	TOTAL SHEETS
MA	HIP(NGB)-004S(015)X	14	66
PROJECT FILE NO.	605323		

TRAFFIC SIGN & PAVEMENT MARKINGS

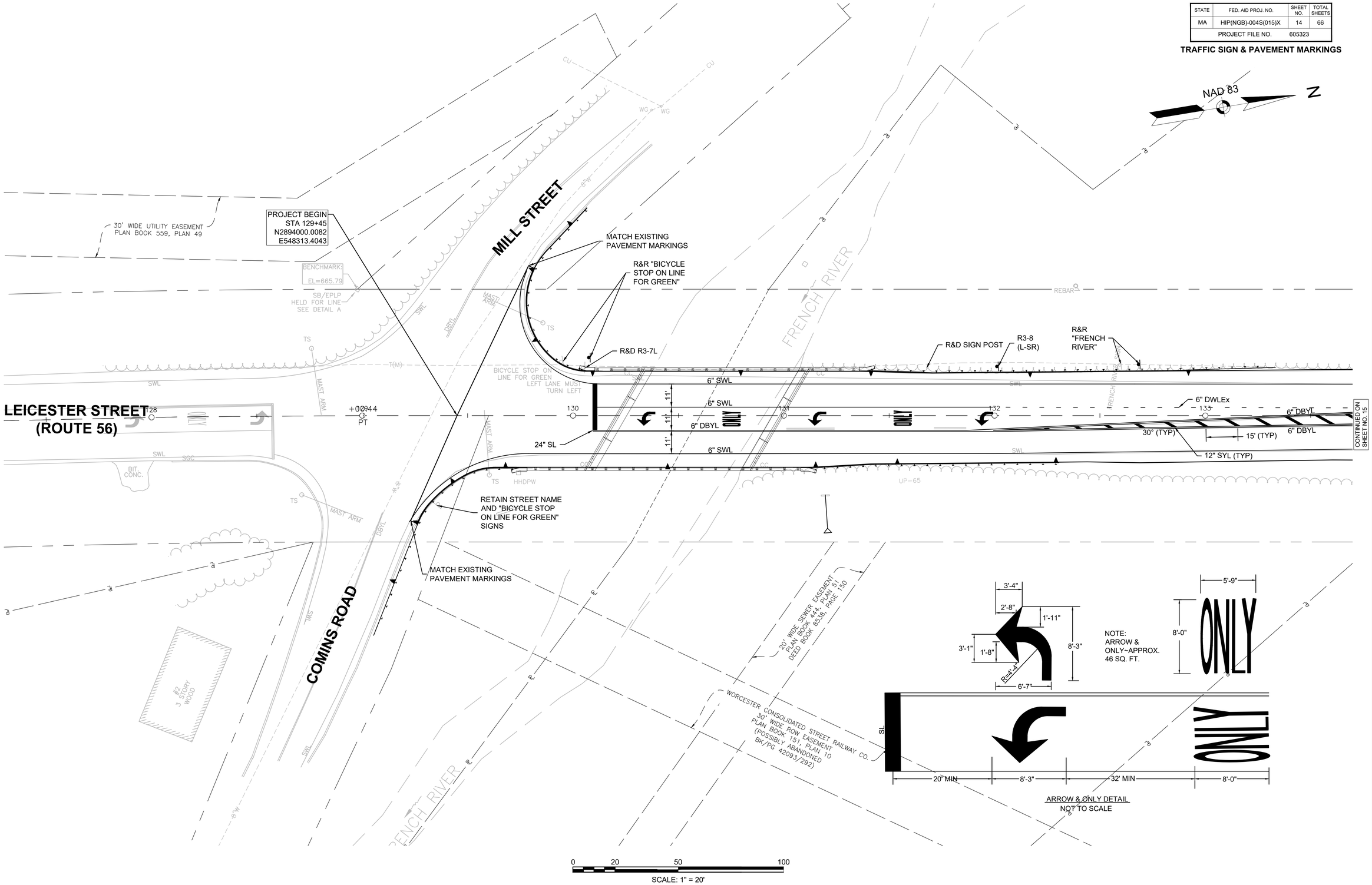

TRAFFIC SIGN & PAVEMENT MARKINGS.DWG Plotted on 3-Sep-2026 8:40 AM

OXFORD
LEICESTER STREET/RT 56

STATE	FED. AID PROJ. NO.	SHEET NO.	TOTAL SHEETS
MA	HIP(NGB)-004S(015)X	15	66
PROJECT FILE NO.	605323		

TRAFFIC SIGN & PAVEMENT MARKINGS

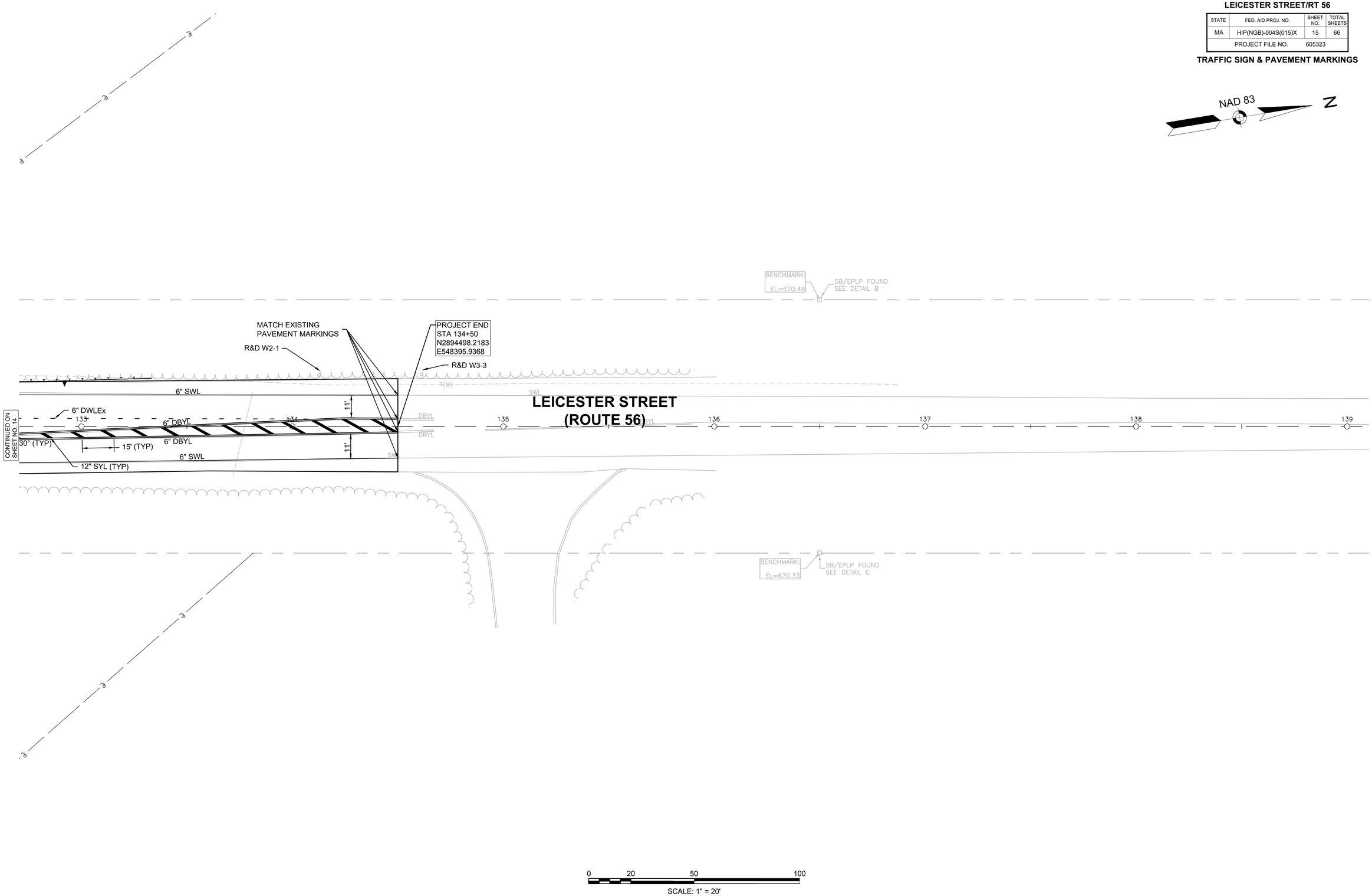

TRAFFIC SIGN & PAVEMENT MARKINGS.DWG Plotted on 3-Sep-2026 8:40 AM

TRAFFIC SIGN SUMMARY

INDENTIF-ICATION NUMBER	SIZE OF SIGN (INCHES)		TEXT	TEXT DIMENSIONS (INCHES)			NUMBER OF SIGNS REQUIRED	COLOR			POST SIZE AND NUMBER REQUIRED	UNIT AREA IN SQUARE FEET	AREA IN SQUARE FEET
	WIDTH	HEIGHT		LETTER HEIGHT	VERTICAL SPACING	ARROW RTE MKR.		BACK-GROUND	LEGEND	BORDER			
R3-8 (L-SR)	36	30		SEE 2023 MUTCD			1	WHITE	BLACK	BLACK	P5(1)	7.5	7.5

Plotted on 3-Sep-2026 8:41 AM
TRAFFIC SIGN & PAVEMENT MARKINGS.DWG

TEMPORARY TRAFFIC CONTROL PLAN GENERAL NOTES

1. ALL TEMPORARY TRAFFIC CONTROL WORK SHALL CONFORM TO THE 2023 "MANUAL ON UNIFORM TRAFFIC CONTROL DEVICES" (MUTCD), WITH LATEST REVISIONS AND MASSACHUSETTS AMENDMENTS.
2. ALL SIGN LEGENDS, BORDERS AND MOUNTINGS SHALL BE IN ACCORDANCE WITH THE 2023 MUTCD, WITH LATEST REVISIONS AND MASSACHUSETTS AMENDMENTS.
3. TEMPORARY CONSTRUCTION SIGNING AND ALL OTHER TRAFFIC CONTROL DEVICES SHALL BE IN PLACE PRIOR TO THE START OF WORK.
4. THE CONTRACTOR SHALL INSTALL ALL DETOUR SIGNING WITHIN THE RIGHT OF WAY LIMITS.
5. TEMPORARY CONSTRUCTION SIGNING, BARRICADES AND ALL OTHER NECESSARY WORK ZONE TRAFFIC CONTROL DEVICES SHALL BE REMOVED FROM THE HIGHWAY OR COVERED WHEN THEY ARE NO LONGER REQUIRED FOR CONTROL OF TRAFFIC. ALL SIGNS INSTALLED BY THE CONTRACTOR SHALL BE MAINTAINED FOR THE DURATION OF THE CONSTRUCTION AND REMOVED UPON COMPLETION.
6. SIGNS AND SIGN SUPPORTS LOCATED ON OR NEAR THE TRAVELED WAY, CHANNELIZING DEVICES, BARRIERS, AND CRASH ATTENUATORS MUST PASS THE CRITERIA SET FORTH IN THE "MANUAL FOR ASSESSING SAFETY HARDWARE" (MASH).
7. THE CONTRACTOR SHALL NOTIFY EACH ABUTTER AT LEAST 24 HOURS IN ADVANCE OF THE START ANY WORK THAT WILL REQUIRE THE TEMPORARY CLOSURE OF ACCESS, SUCH AS CONDUIT INSTALLATION, EXISTING PAVEMENT EXCAVATION, TEMPORARY PAVEMENT PLACEMENT AND SIMILAR OPERATIONS.
8. MAXIMUM SPACING OF TRAFFIC DEVICES IN A TAPER IS EQUAL IN FEET TO THE POSTED SPEED LIMIT IN MPH. AT LOCATIONS NEAR ROAD CLOSURES, REDUCE THE SPACING TO HALF OF MAXIMUM.
9. THE MINIMUM TRAVEL LANE WIDTH IS TO BE 11 FEET, UNLESS OTHERWISE NOTED.
10. SIGN LOCATIONS SHOWN ON THE PLANS ARE APPROXIMATE ONLY. DISTANCES SHOWN ON THE PLANS ARE TO BE USED AS A GUIDE AND MAY BE ADJUSTED IN THE FIELD BY THE ENGINEER.
11. ALL SIGNS SHALL BE MOUNTED ON THEIR OWN STANDARD SIGN SUPPORTS UNLESS OTHERWISE NOTED ON THE PLAN. SIGNS INSTALLED ON PORTABLE STANDS REQUIRE A 12-INCH MINIMUM MOUNTING HEIGHT FROM THE ROADWAY SURFACE TO THE BOTTOM OF THE SIGN. SIGNS INSTALLED ON PORTABLE STANDS AMONG CHANNELIZING DEVICES REQUIRE A 36-INCH MINIMUM MOUNTING HEIGHT FROM THE ROADWAY SURFACE TO THE BOTTOM OF THE SIGN. SIGNS MOUNTED ON POSTS REQUIRE A 7-FOOT MINIMUM MOUNTING HEIGHT FROM THE ROADWAY OR SIDEWALK SURFACE TO THE BOTTOM OF THE SIGN.
12. ALL PUBLIC OR PRIVATE PROPERTY DISTURBED BY THE CONTRACTOR'S OPERATIONS SHALL BE RESTORED TO ITS ORIGINAL CONDITION OR BETTER.
13. PRIOR TO THE COMMENCEMENT OF THE CONTRACTOR'S OPERATIONS THE CONTRACTOR SHALL CONTACT DIGSAFE (1-888-344-7233 OR 1-888-DIG-SAFE) TO MARK OUT UTILITIES WITHIN THE PROJECT AREA.
14. THESE TRAFFIC MANAGEMENT PLANS ARE PROVIDED AS A GUIDE FOR TYPICAL WORK ZONE TRAFFIC CONTROL APPLICATIONS. THEY ARE NOT INTENDED TO COVER ALL POSSIBLE CONSTRUCTION OPERATIONS WHICH THE CONTRACTOR MAY EMPLOY. TRAFFIC CONTROL FOR CONSTRUCTION OPERATIONS, IF APPLICABLE, SHALL BE IN ACCORDANCE WITH THE 2023 MUTCD, WITH LATEST REVISIONS AND MASSACHUSETTS AMENDMENTS.
15. THE CONTRACTOR SHALL BE RESPONSIBLE FOR LOCATING ALL PROPOSED PORTABLE CHANGEABLE MESSAGE SIGNS (PCMS) IN THE FIELD SUCH THAT VEHICULAR AND PEDESTRIAN TRAFFIC IS NOT IMPEDED.
16. POLICE DETAILS SHOWN ON THE PLANS INDICATE A NEED FOR POLICE INCIDENTAL TO A SPECIFIC TRAFFIC CONFIGURATION AND DO NOT REPRESENT ACTUAL LOCATIONS OR NUMBERS REQUIRED. THE ENGINEER SHALL DETERMINE THE SPECIFIC LOCATIONS OF THE POLICE DETAILS AND THE NUMBER OF DETAILS REQUIRED.
17. THE CONTRACTOR SHALL COORDINATE PUBLIC INFORMATION REGARDING CONSTRUCTION ACTIVITIES WITH MBTA BUS OPERATIONS AND MASSDOT MEDIA RELATIONS.
18. CONTRACTOR SHALL SECURE ALL WORK AREAS AT ALL TIMES TO PREVENT UNAUTHORIZED ACCESS.
19. ILLUMINATION REQUIRED FOR NIGHTTIME WORK SHALL BE IN ACCORDANCE WITH MASSDOT STANDARDS.
20. ALL TEMPORARY FENCING SHALL BE CHAIN-LINK FENCE.
21. CONFLICTING SIGNS SHALL BE COVERED OR REMOVED.
22. AT ROAD CLOSURES, PROVIDE A SUFFICIENT NUMBER OF TYPE III BARRICADES TO CLOSE THE ENTIRE ROADWAY.
23. NO ALTERATION SHALL BE UNDERTAKEN WHICH DECREASES OR HAS THE EFFECT OF DECREASING ACCESSIBILITY OR USABILITY OF A FACILITY BELOW THE REQUIREMENTS FOR NEW CONSTRUCTION.
24. THE ROUTE 56 ROAD CLOSURE IS LIMITED TO 14 CONSECUTIVE DAYS.

SUGGESTED CMS MESSAGES

	PRIOR TO CONSTRUCTION	DURING CONSTRUCTION
CMS-1 & 3	ROUTE 56 SOUTH	RT 56SB CLOSED AHEAD
	CLOSURE BEGINS XXX-XX	FOLLOW DETOUR
CMS-2	ROUTE 56 NORTH	RT 56NB CLOSED AHEAD
	CLOSURE BEGINS XXX-XX	FOLLOW DETOUR
CMS-4	ROUTE 56 NORTH	RT 56NB CLOSED 0.5 MILE
	CLOSURE BEGINS XXX-XX	FOLLOW DETOUR

OXFORD
LEICESTER STREET/RT 56

STATE	FED. AID PROJ. NO.	SHEET NO.	TOTAL SHEETS
MA	HIP(NGB)-004S(015)X	17	66
PROJECT FILE NO.	605323		

TEMPORARY TRAFFIC CONTROL PLANS GENERAL NOTES

DESIGN CRITERIA

SUGGESTED WORK ZONE WARNING SIGN SPACING

ROAD TYPE	DISTANCE BETWEEN SIGNS (FT)		
	A	B	C
URBAN (LOW SPEED)	100	100	100
URBAN (HIGH SPEED)*	350	350	350
RURAL	500	500	500
FREEWAYS AND EXPRESSWAYS	1000	1500	2640

*ROAD TYPE TO BE DETERMINED BY MASSDOT

FORMULAS FOR L

SPEED	FORMULA
40 MPH OR LESS	$L=WS^2/60$
45 MPH OR GREATER	L=WS

L= TAPER LENGTH IN FEET
W= WIDTH OF OFFSET IN FEET
S= POSTED SPEED, THE OFF-PEAK 85TH PERCENTILE SPEED PRIOR TO WORK STARTING, OR THE ANTICIPATED OPERATING SPEED IN MPH

TAPER LENGTH CRITERIA FOR TEMPORARY TRAFFIC CONTROL ZONES

TYPE OF TAPER	TAPER LENGTH (L)*
MERGING TAPER	AT LEAST L
SHIFTING TAPER	AT LEAST 0.5L
SHOULDER TAPER	AT LEAST 0.33L
ONE-LANE, TWO-WAY TRAFFIC TAPER	50 FT MIN 100 FT MAX
DOWNSTREAM TAPER	50 FT MIN 100 FT MAX PER LANE

LEGEND

- CONSTRUCTION SIGN
- WORK ZONE
- CMS — CHANGEABLE MESSAGE SIGN
- TYPE III BARRICADE
- TEMPORARY CONCRETE BARRIER
- DETOUR ROUTE
- CONSTRUCTION FENCE
- REFLECTORIZED PLASTIC DRUM
- (P) POLICE DETAIL

TEMPORARY TRAFFIC CONTROL PLANS SIGN SUMMARY.DWG Plotted on 3-Sep-2026 8:41 AM

NOTE: POLICE DETAIL TO BE PROVIDED AT THE INTERSECTION OF STAFFORD ST AND MILL ST FROM 7:00AM TO 7:00PM AND THE INTERSECTION OF STAFFORD ST AND PLEASANT ST FROM 7:00AM TO 9:00AM AND 4:00PM TO 6:00PM FOR THE DURATION OF THE BRIDGE CLOSURE.

OXFORD
LEICESTER STREET/RT 56

STATE	FED. AID PROJ. NO.	SHEET NO.	TOTAL SHEETS
MA	HIP(NGB)-004S(015)X	18	66
PROJECT FILE NO.	605323		

TEMPORARY TRAFFIC CONTROL PLANS
CAR DETOUR PLAN

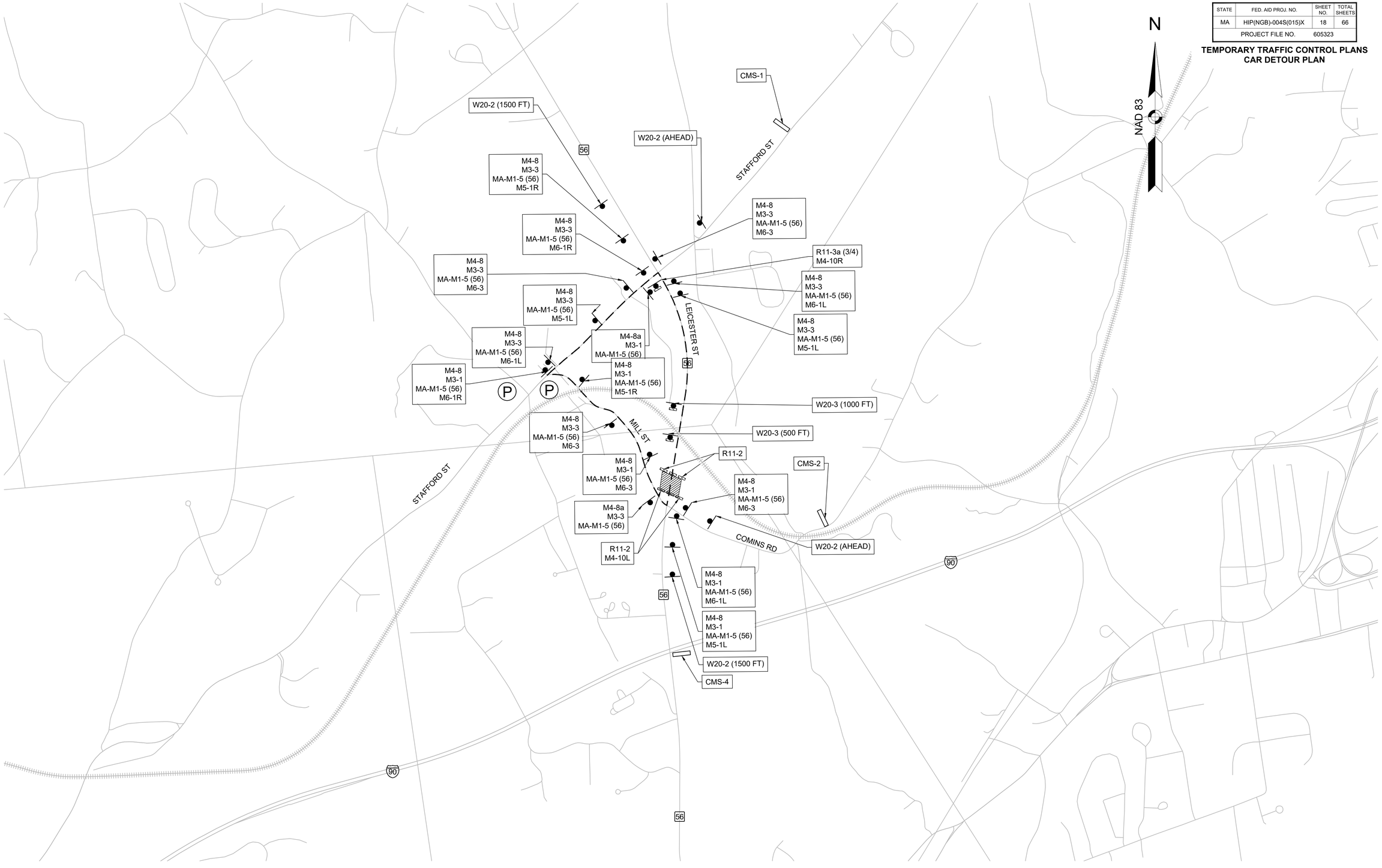

DETOUR LENGTH: 1.8 MILES
NOTE: SEE SHEET 20 FOR BRIDGE CLOSURE DETAIL

605323_TR(CAR DETOUR).DWG Plotted on 3-Sep-2026 8:41 AM

OXFORD
LEICESTER STREET/RT 56

STATE	FED. AID PROJ. NO.	SHEET NO.	TOTAL SHEETS
MA	HIP(NGB)-004S(015)X	19	66
PROJECT FILE NO.	605323		

TEMPORARY TRAFFIC CONTROL PLANS
TRUCK DETOUR PLAN

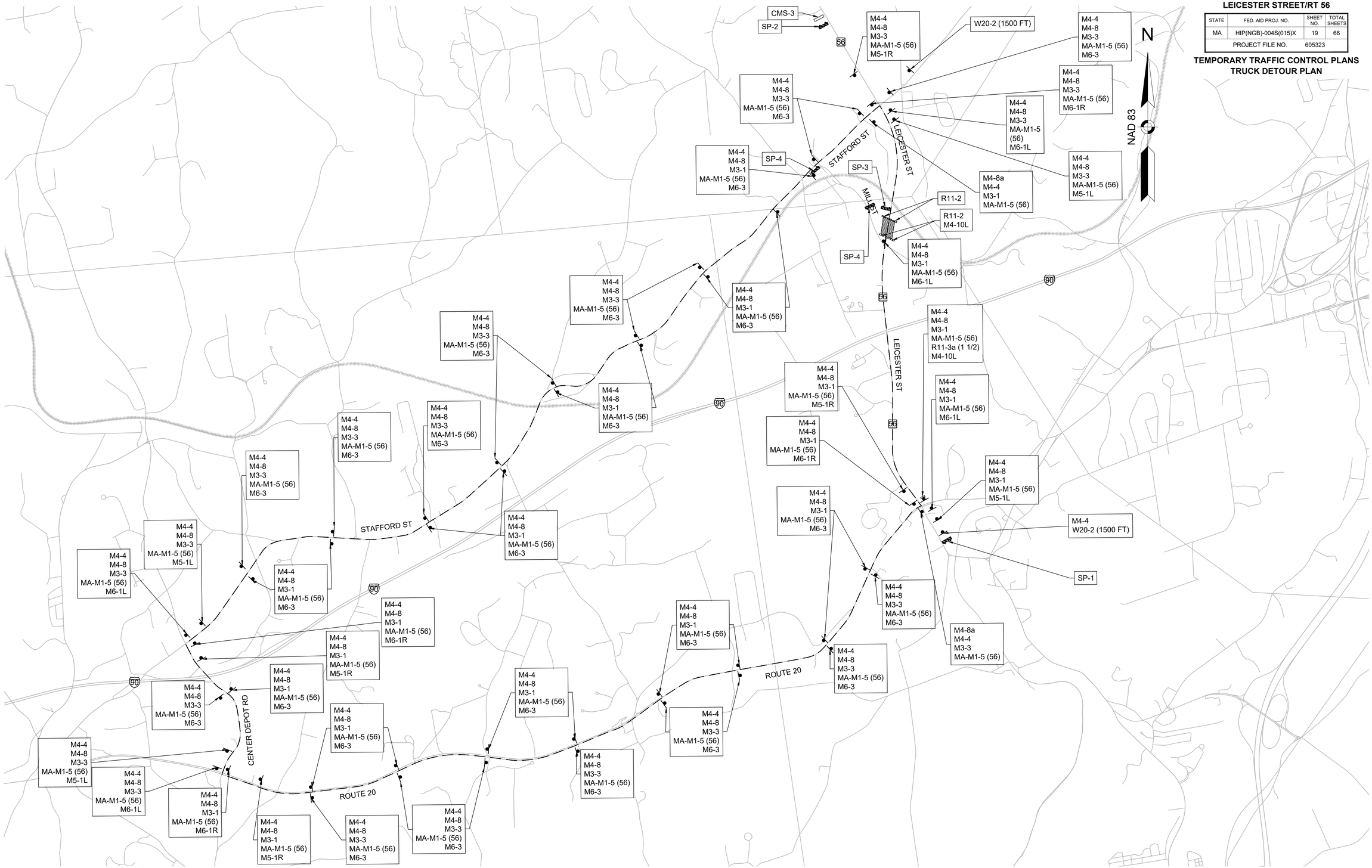

DETOUR LENGTH: 12.7 MILES
NOTE: SEE SHEET 20 FOR BRIDGE CLOSURE DETAIL

TEMPORARY TRAFFIC CONTROL PLANS.DWG Plotted on 3-Sep-2026 8:42 AM

OXFORD
LEICESTER STREET/RT 56

STATE	FED. AID PROJ. NO.	SHEET NO.	TOTAL SHEETS
MA	HIP(NGB)-004S(015)X	20	66
PROJECT FILE NO.	605323		

TEMPORARY TRAFFIC CONTROL PLANS
BRIDGE CLOSURE DETAIL

LEGEND

- 72" MIN. TEMPORARY FENCE WITH GATE
- TEMPORARY CONCRETE BARRIER (TYPE TL-3)
- TYPE III BARRICADE WITH SIGN PANEL
- REFLECTORIZED PLASTIC DRUM

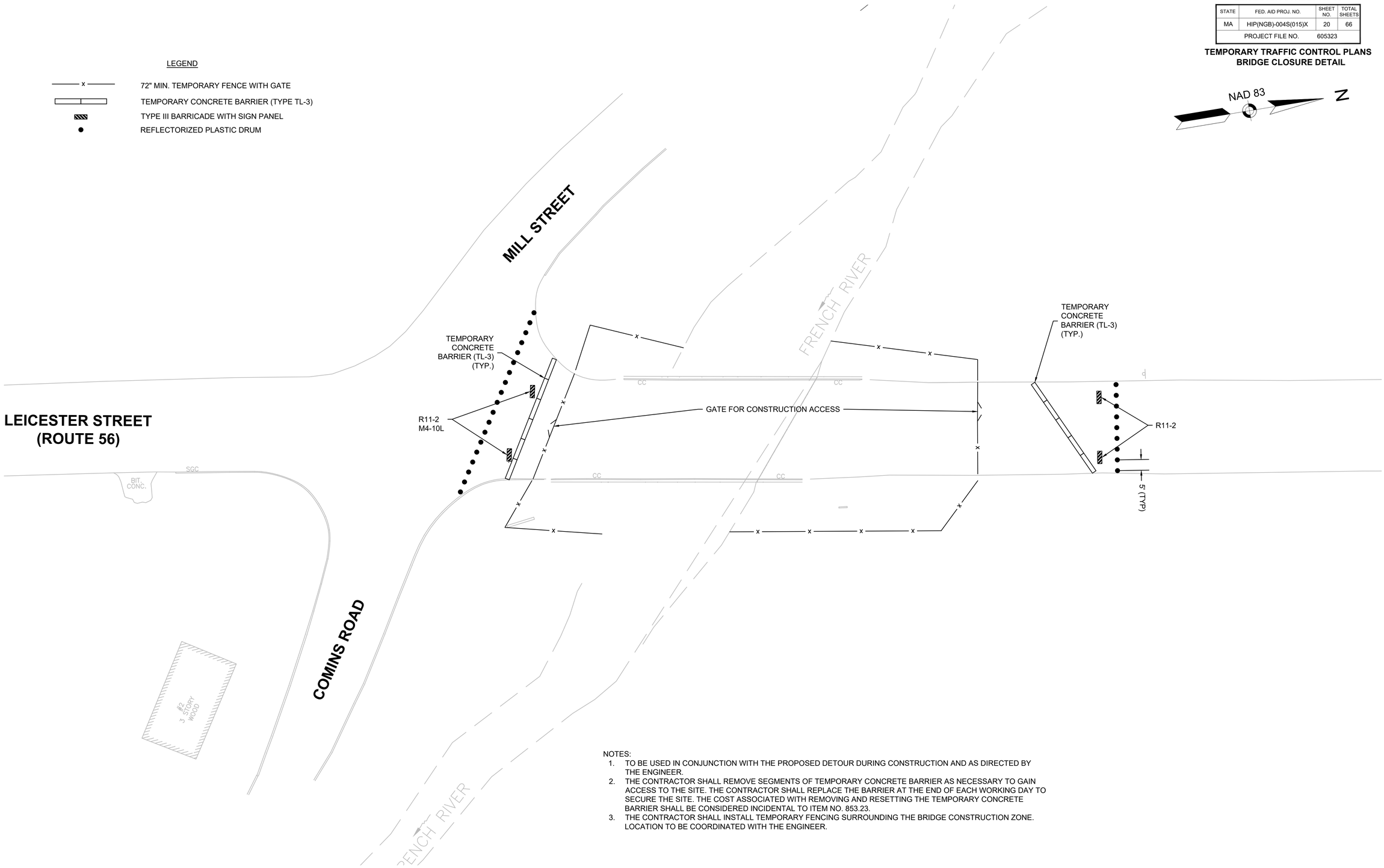

NOTES:

1. TO BE USED IN CONJUNCTION WITH THE PROPOSED DETOUR DURING CONSTRUCTION AND AS DIRECTED BY THE ENGINEER.
2. THE CONTRACTOR SHALL REMOVE SEGMENTS OF TEMPORARY CONCRETE BARRIER AS NECESSARY TO GAIN ACCESS TO THE SITE. THE CONTRACTOR SHALL REPLACE THE BARRIER AT THE END OF EACH WORKING DAY TO SECURE THE SITE. THE COST ASSOCIATED WITH REMOVING AND RESETTING THE TEMPORARY CONCRETE BARRIER SHALL BE CONSIDERED INCIDENTAL TO ITEM NO. 853.23.
3. THE CONTRACTOR SHALL INSTALL TEMPORARY FENCING SURROUNDING THE BRIDGE CONSTRUCTION ZONE. LOCATION TO BE COORDINATED WITH THE ENGINEER.

0 20 50 100

SCALE: 1" = 20'

TRAFFIC SIGN & PAVEMENT MARKINGS.DWG Plotted on 3-Sep-2026 8:42 AM

ROUTE 56-COMINS-MILL INTERSECTION

SEQUENCE AND TIMING FOR FULLY-ACTUATED TRAFFIC SIGNAL CONTROL

STREET	DIRECTION	HOUSINGS	NOT USED	NOT USED	NOT USED	Ø4	NOT USED	Ø6	NOT USED	Ø8 (PERM)	NOT USED	PRE-EMPT 1	PRE-EMPT 2	PRE-EMPT 3	PRE-EMPT 4	FLASH OPER.
ROUTE 56	NB	I				R R R		G Y R		R R R			G Y R	R R R	R R R	FY
ROUTE 56	NB LEFT	H				R R R		G Y R		R R R			G Y R	R R R	R R R	FY
COMINS RD	WB	F,G				R R R		R R R		G Y R			R R R	R R R	G Y R	FR
MILL ST	EB	A,B,E				G Y R		R R R		R R R			R R R	G Y R	R R R	FR
TIMING IN SECONDS																
MINIMUM GREEN (INITIAL)						6		6		6						EMERGENCY ONLY
PASSAGE TIME (VEHICLE)						2		3		2						
MAXIMUM 1						33		18		33						
MAXIMUM 2																
YELLOW CLEARANCE						3		3		3			3	3	3	
RED CLEARANCE						1		2		1			2	2	2	
RECALL						OFF		ON		OFF						
MEMORY						NON-LOCK		NON-LOCK		NON-LOCK						

NOTES:

1. MAXIMUM 1 = ALL TIMES.
2. MAXIMUM 2 = NOT USED.
3. STOP AND GO OPERATION FOR 24 HOURS PER DAY. FLASHING OPERATION FOR EMERGENCY ONLY.
4. ALL TRAFFIC SIGNALS ON THE SOUTHBOUND LEG OF THE INTERSECTION (ROUTE 56) SHALL BE COVERED.
5. MAINTAIN ALL PRE-EMPTION.
6. THE CONTRACTOR SHALL MONITOR TRAFFIC CONDITIONS AND ADJUST SIGNAL TIMINGS AS NECESSARY AS DIRECTED BY THE ENGINEER.

ROUTE 56-STAFFORD INTERSECTION

SEQUENCE AND TIMING FOR FULLY-ACTUATED TRAFFIC SIGNAL CONTROL

STREET	DIRECTION	HOUSINGS	NOT USED	Ø2 (PERM)	Ø3	Ø4 (PERM)	NOT USED	Ø6 (PERM)	NOT USED	Ø8 (PERM)	FLASH OPER.
STAFFORD ST	EB			R R R	R R R	G Y R		R R R		R R R	FR
STAFFORD ST	WB			R R R	<G <Y R	R R R		R R R		G Y R	FR
ROUTE 56	NB			R R R	R R R	R R R		R R R		R R R	FY
ROUTE 56	SB			G Y R	R R R	R R R		G Y R		R R R	FY
TIMING IN SECONDS											
MINIMUM GREEN (INITIAL)				*	*	*		*		*	EMERGENCY ONLY
PASSAGE TIME (VEHICLE)				*	*	*		*		*	
MAXIMUM 1				18	5	52		18		62	
MAXIMUM 2											
YELLOW CLEARANCE				*	*	*		*		*	
RED CLEARANCE				*	*	*		*		*	
RECALL				*	*	*		*		*	
MEMORY				*	*	*		*		*	

* MAINTAIN EXISTING SETTING IN CONROLLER

1. MAXIMUM 1 = ALL TIMES.
2. MAXIMUM 2 = NOT USED.
3. STOP AND GO OPERATION FOR 24 HOURS PER DAY. FLASHING OPERATION FOR EMERGENCY ONLY.
4. MAINTAIN PRE-EMPTION SETTING, IF PRESENT.
5. THE CONTRACTOR SHALL MONITOR TRAFFIC CONDITIONS AND ADJUST SIGNAL TIMINGS AS NECESSARY AS DIRECTED BY THE ENGINEER.

OXFORD
LEICESTER STREET/RT 56

STATE	FED. AID PROJ. NO.	SHEET NO.	TOTAL SHEETS
MA	HIP(NGB)-004S(015)X	21	66
PROJECT FILE NO.	605323		

TEMPORARY TRAFFIC CONTROL PLANS
TEMPORARY TRAFFIC SIGNAL TIMINGS

PREFERENTIAL PHASING SEQUENCE

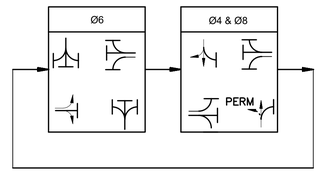

PREFERENTIAL PHASING SEQUENCE

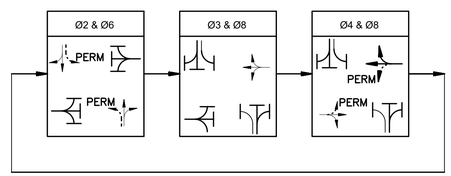

TEMPORARY TRAFFIC CONTROL PLANS TEMPORARY SIGNAL PLAN.DWG Plotted on 3-Sep-2026 8:43 AM

OXFORD
LEICESTER STREET/RT 56

STATE	FED. AID PROJ. NO.	SHEET NO.	TOTAL SHEETS
MA	HIP(NGB)-004S(015)X	22	66
PROJECT FILE NO.	605323		

TEMPORARY TRAFFIC CONTROL PLANS
SIGN SUMMARY

TEMPORARY TRAFFIC SIGN SUMMARY

INDENTIF-ICATION NUMBER	SIZE OF SIGN (INCHES)		TEXT	TEXT DIMENSIONS (INCHES)			NUMBER OF SIGNS REQUIRED	COLOR			POST SIZE AND NUMBER REQUIRED	UNIT AREA IN SQUARE FEET	AREA IN SQUARE FEET
	WIDTH	HEIGHT		LETTER HEIGHT	VERTICAL SPACING	ARROW RTE MKR.		BACK-GROUND	LEGEND	BORDER			
MA-M1-5	24	24	56				75	WHITE	BLACK	BLACK		4	300
M3-1	24	12	NORTH				36	WHITE	BLACK	BLACK		2	72
M3-3	24	12	SOUTH				39	WHITE	BLACK	BLACK		2	78
M4-10L	48	18	DETOUR				3	FLUORESCENT ORANGE	BLACK	BLACK		6	18
M4-10R	48	18	DETOUR				1	FLUORESCENT ORANGE	BLACK	BLACK		6	6
M4-4	24	12	TRUCK				58	WHITE	BLACK	BLACK		2	116
M4-8	24	12	DETOUR				71	FLUORESCENT ORANGE	BLACK	BLACK		2	142
M4-8a	24	18	END DETOUR				4	FLUORESCENT ORANGE	BLACK	BLACK		3	12
M5-1L	21	15					7	FLUORESCENT ORANGE	BLACK	BLACK		2.2	15.4
M5-1R	21	15					5	FLUORESCENT ORANGE	BLACK	BLACK		2.2	11.0
M6-1L	21	15					8	FLUORESCENT ORANGE	BLACK	BLACK		2.2	17.6
M6-1R	21	15					7	FLUORESCENT ORANGE	BLACK	BLACK		2.2	15.4
M6-3	21	15					43	FLUORESCENT ORANGE	BLACK	BLACK		2.2	94.6
R11-2	48	30	ROAD CLOSED				4	WHITE	BLACK	BLACK		10	40
R11-3a	60	30	ROAD CLOSED 1 1/2 MILES AHEAD LOCAL TRAFFIC ONLY				1	WHITE	BLACK	BLACK		12.5	12.5
R11-3a	60	30	ROAD CLOSED 3/4 MILES AHEAD LOCAL TRAFFIC ONLY				1	WHITE	BLACK	BLACK		12.5	12.5
SP-1	48	36	56 CLOSED BEYOND MILL STREET FOLLOW DETOUR				1	FLUORESCENT ORANGE	BLACK	BLACK		12	12
SP-2	48	36	56 CLOSED BEFORE MILL STREET FOLLOW DETOUR				1	FLUORESCENT ORANGE	BLACK	BLACK		12	12
SP-3	42	36	56 CLOSED NO TRUCKS BEYOND THIS POINT				1	FLUORESCENT ORANGE	BLACK	BLACK		10.5	10.5
SP-4	42	36	LOW BRIDGE NO TRUCKS BEYOND THIS POINT				2	FLUORESCENT ORANGE	BLACK	BLACK		10.5	21

TEMPORARY TRAFFIC SIGN SUMMARY

INDENTIF-ICATION NUMBER	SIZE OF SIGN (INCHES)		TEXT	TEXT DIMENSIONS (INCHES)			NUMBER OF SIGNS REQUIRED	COLOR			POST SIZE AND NUMBER REQUIRED	UNIT AREA IN SQUARE FEET	AREA IN SQUARE FEET
	WIDTH	HEIGHT		LETTER HEIGHT	VERTICAL SPACING	ARROW RTE MKR.		BACK-GROUND	LEGEND	BORDER			
W20-2 (AHEAD)	36	36	DETOUR AHEAD				2	FLUORESCENT ORANGE	BLACK	BLACK		9	18
W20-2 (1500) FT)	36	36	DETOUR 1500 FT				4	FLUORESCENT ORANGE	BLACK	BLACK		9	36
W20-3 (1000 FT)	36	36	ROAD CLOSED 1000 FT				1	FLUORESCENT ORANGE	BLACK	BLACK		9	9
W20-3 (500 FT)	36	36	ROAD CLOSED 500 FT				1	FLUORESCENT ORANGE	BLACK	BLACK		9	9
TOTAL AREA OF SIGNS (SQUARE FEET)												1090.5	

SP-1

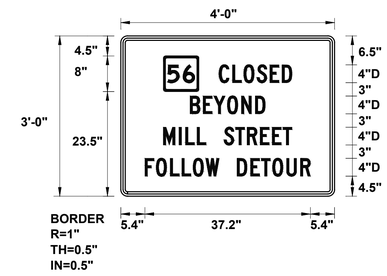

SP-2

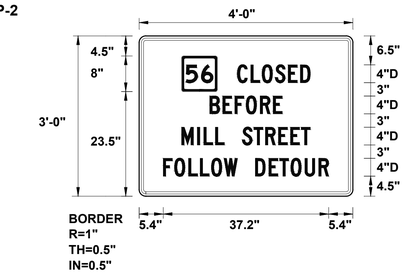

SP-3

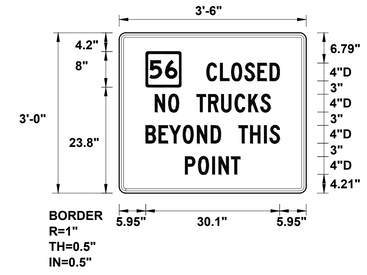

SP-4

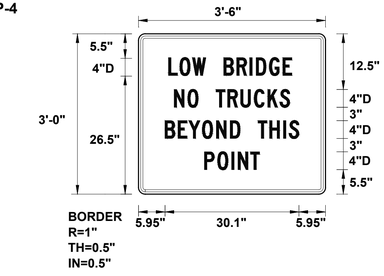

TEMPORARY TRAFFIC CONTROL PLANS SIGN SUMMARY.DWG Plotted on 3-Sep-2026 8:45 AM

OXFORD
LEICESTER STREET/RT 56

STATE	FED. AID PROJ. NO.	SHEET NO.	TOTAL SHEETS
MA	HIP(NGB)-004S(015)X	23	66
PROJECT FILE NO.	605323		

UTILITY & DRAINAGE PLANS NO.1

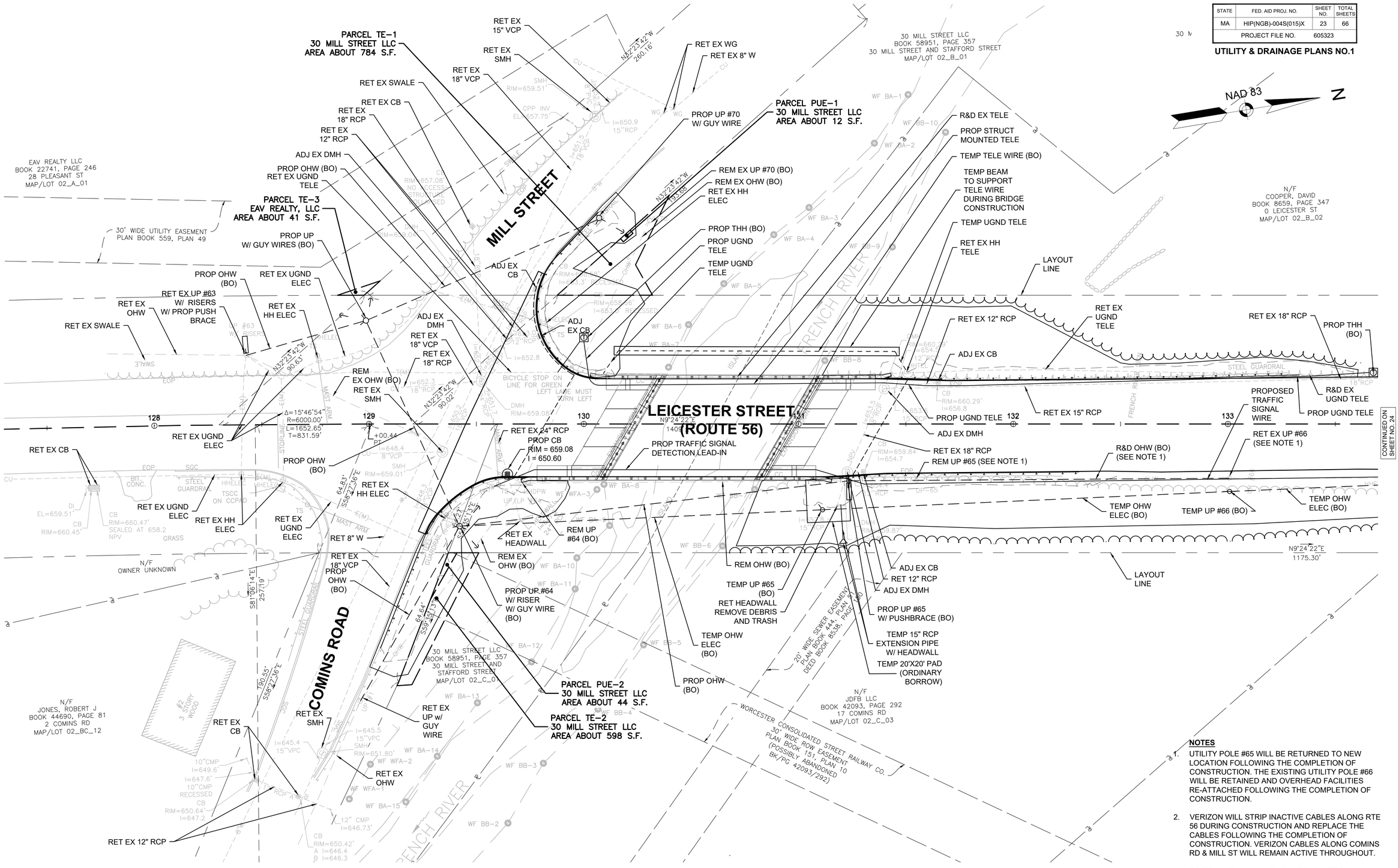

NOTES

1. UTILITY POLE #65 WILL BE RETURNED TO NEW LOCATION FOLLOWING THE COMPLETION OF CONSTRUCTION. THE EXISTING UTILITY POLE #66 WILL BE RETAINED AND OVERHEAD FACILITIES RE-ATTACHED FOLLOWING THE COMPLETION OF CONSTRUCTION.
2. VERIZON WILL STRIP INACTIVE CABLES ALONG RTE 56 DURING CONSTRUCTION AND REPLACE THE CABLES FOLLOWING THE COMPLETION OF CONSTRUCTION. VERIZON CABLES ALONG COMINS RD & MILL ST WILL REMAIN ACTIVE THROUGHOUT.
3. TELEPHONE MANHOLE LOCATIONS WERE PROVIDED BY AT&T AND ARE CONCEPTUAL. FINAL LOCATIONS TO BE DETERMINED BY AT&T IN COORDINATION WITH THE ENGINEER.

0 20 50 100
SCALE: 1" = 20'

CONTINUED ON SHEET NO. 24

UTILITY & DRAINAGE PLANS NO.2.DWG Plotted on 3-Sep-2026 8:45 AM

OXFORD
LEICESTER STREET/RT 56

STATE	FED. AID PROJ. NO.	SHEET NO.	TOTAL SHEETS
MA	HIP(NGB)-004S(015)X	24	66
PROJECT FILE NO.	605323		

UTILITY & DRAINAGE PLANS NO.2

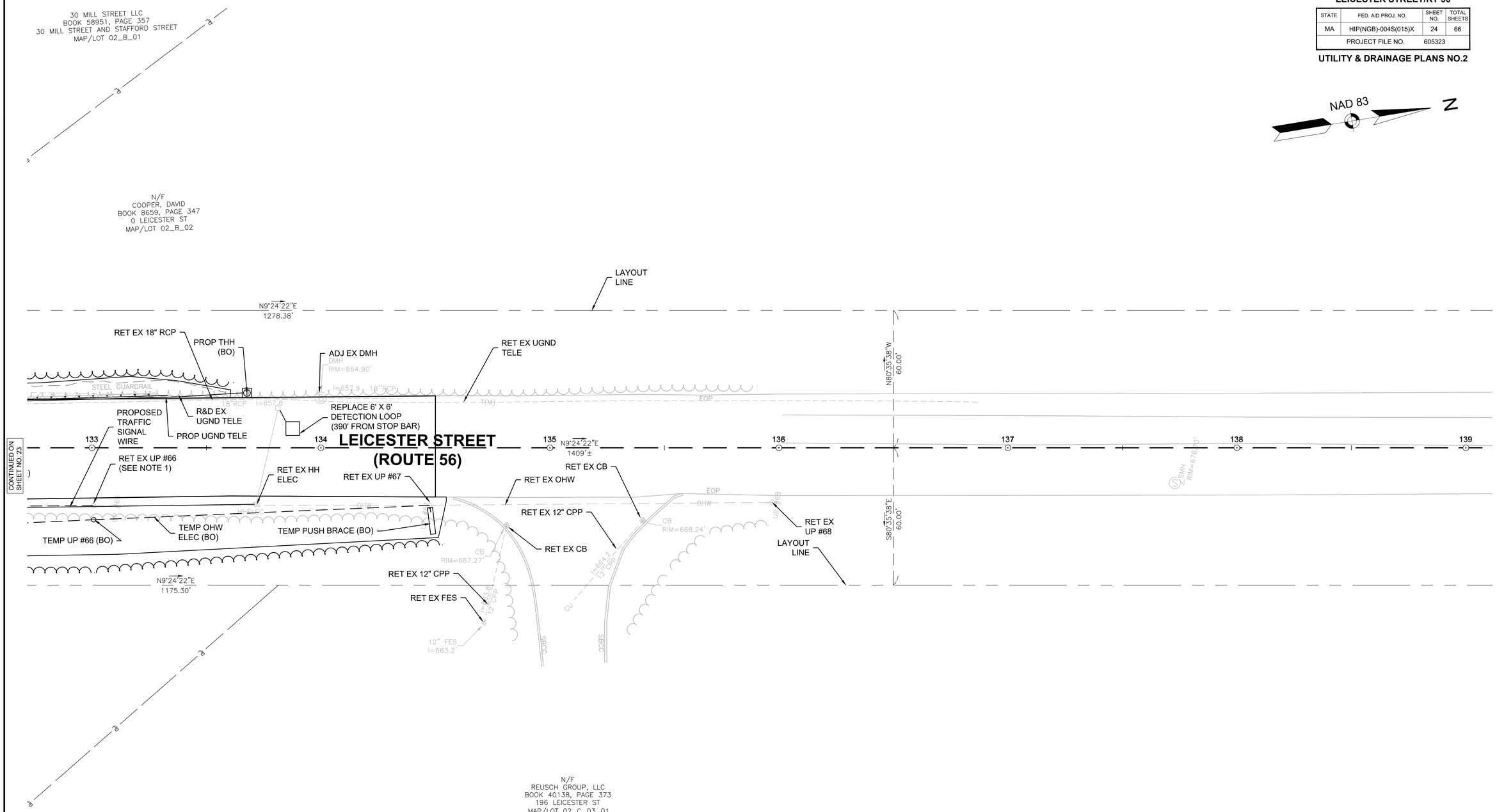

NOTES

1. UTILITY POLE #65 AND UTILITY POLE #66 WILL BE RETURNED TO THEIR ORIGINAL LOCATIONS FOLLOWING THE COMPLETION OF CONSTRUCTION.
2. VERIZON WILL STRIP INACTIVE CABLES ALONG RTE 56 DURING CONSTRUCTION AND REPLACE THE CABLES FOLLOWING THE COMPLETION OF CONSTRUCTION. VERIZON CABLES ALONG COMINS RD & MILL ST WILL REMAIN ACTIVE THROUGHOUT.
3. COORDINATE FINAL TELEPHONE MANHOLE LOCATIONS WITH AT&T PRIOR TO INSTALLATION.

UTILITY & DRAINAGE PLANS NO.2.DWG Plotted on 3-Sep-2026 8:46 AM

OXFORD
LEICESTER STREET/RT 56

STATE	FED. AID PROJ. NO.	SHEET NO.	TOTAL SHEETS
MA	HIP(NGB)-004S(015)X	25	66
PROJECT FILE NO.	605323		

TEMPORARY GRADING FOR UTILITY POLE WORK

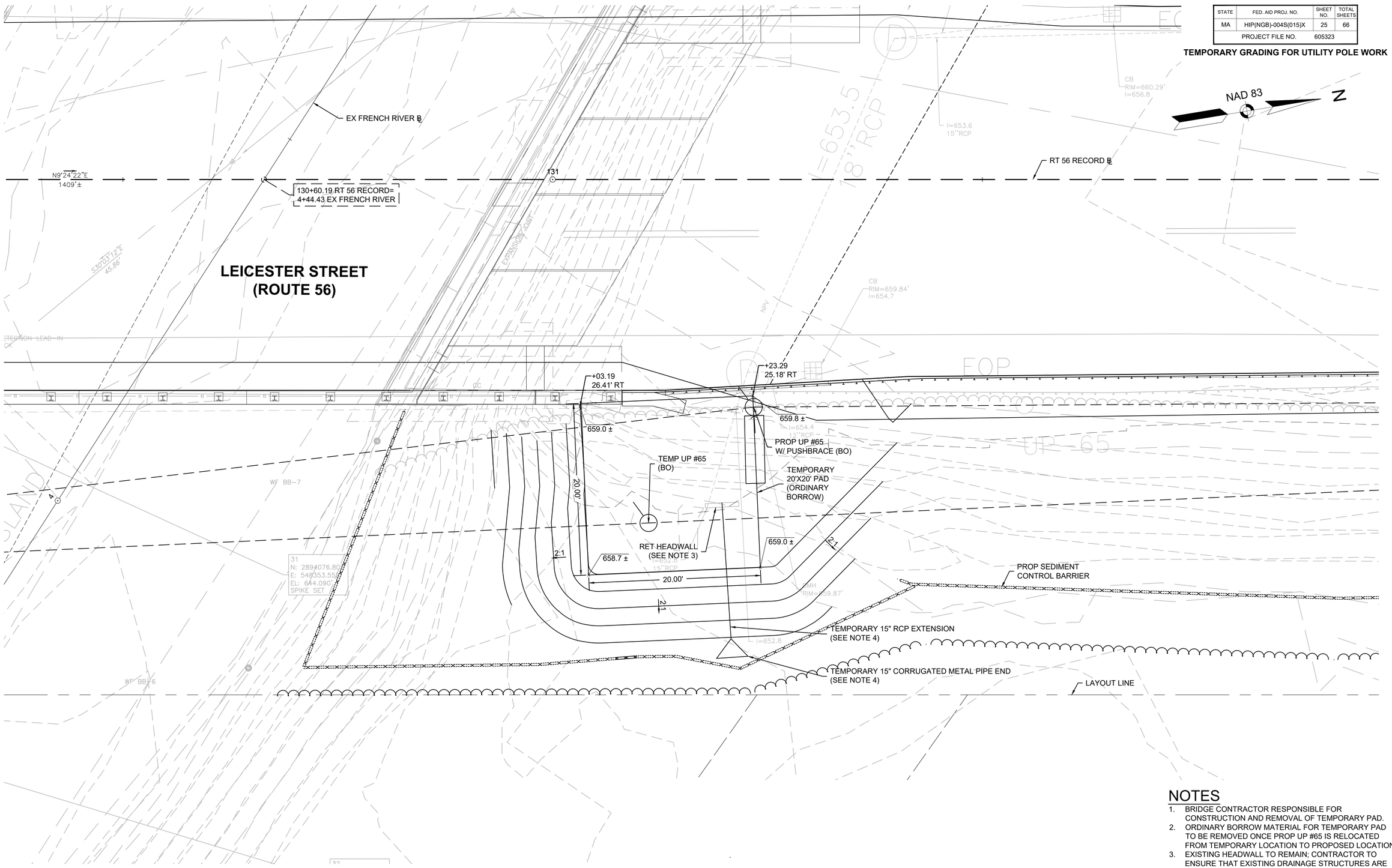

NOTES

1. BRIDGE CONTRACTOR RESPONSIBLE FOR CONSTRUCTION AND REMOVAL OF TEMPORARY PAD.
2. ORDINARY BORROW MATERIAL FOR TEMPORARY PAD TO BE REMOVED ONCE PROP UP #65 IS RELOCATED FROM TEMPORARY LOCATION TO PROPOSED LOCATION
3. EXISTING HEADWALL TO REMAIN; CONTRACTOR TO ENSURE THAT EXISTING DRAINAGE STRUCTURES ARE NOT DAMAGED DURING PAD REMOVAL
4. TEMPORARY PIPE EXTENSION AND PIPE END TO BE REMOVED AND STACKED DURING PAD REMOVAL

605323_HD(TEMPPAD).DWG Plotted on 3-Sep-2026 8:46 AM

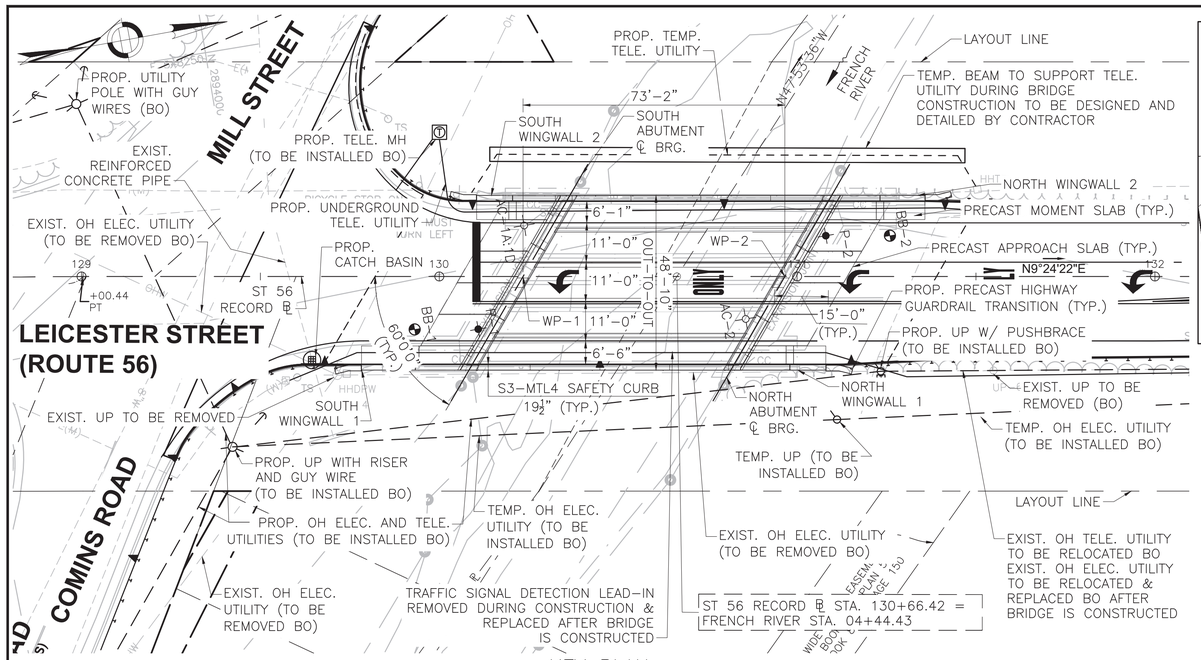

KEY PLAN
SCALE: 1" = 20'

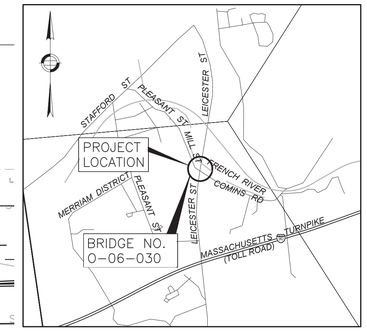

LOCUS MAP
SCALE: 1" = 2000'

OXFORD
LEICESTER STREET/ST 56

STATE	FED. AID PROJ. NO.	SHEET NO.	TOTAL SHEETS
MA	HIP(NGB)-004S(015)X	26	66
PROJECT FILE NO.	605323		

TITLE SHEET

ESTIMATED QUANTITIES
NOT GUARANTEED

ITEM	QUANTITY	UNIT
DEMOLITION OF SUPERSTRUCTURE OF BRIDGE NO. O-06-030	1	LS
REINFORCED CONCRETE EXCAVATION	125	CY
BRIDGE EXCAVATION	165	CY
GRAVEL BORROW FOR BACKFILLING STRUCTURES AND PIPES	125	CY
CONTROLLED LOW-STRENGTH MATERIAL (>300 PSI)	12	CY
SUPERPAVE BRIDGE SURFACE COURSE – 9.5 POLYMER (SSC-B – 9.5 – P)	36	TON
SUPERPAVE BRIDGE PROTECTIVE COURSE – 9.5 POLYMER (SPC-B – 9.5 – P)	36	TON
5 INCH ELECTRICAL CONDUIT – RTRC	90	FT
TEMPORARY UTILITY BRIDGE	1	LS
TEMPORARY PROTECTIVE SHIELDING BRIDGE NO. O-06-030	1	LS
BRIDGE SUPERSTRUCTURE, BRIDGE NO. O-06-030 (1D5)	1	LS

WP	NORTHING	EASTING	STATION
1	2894077.3705	548326.2200	130+23.42
2	2894149.5534	548338.1777	130+96.58

KEY:

PROP. = PROPOSED
EXIST. = EXISTING
TEMP. = TEMPORARY
ELEC. = ELECTRIC
TELE. = TELEPHONE
OH = OVERHEAD
MH = MANHOLE
UP = UTILITY POLE
RCP = REINFORCED CONCRETE PIPE
BO = BY OTHERS

INDEX OF SHEETS

SHEET NO.	TITLE
1	TITLE SHEET
2	GENERAL NOTES
3	BORING LOGS 1 OF 2
4	BORING LOGS 2 OF 2
5	PROBE LOGS
6	CONCRETE CORING LOGS 1 OF 3
7	CONCRETE CORING LOGS 2 OF 3
8	CONCRETE CORING LOGS 3 OF 3
9	PLAN & ELEVATION
10	SUBSTRUCTURE DEMOLITION
11	SOUTH ABUTMENT PLAN & ELEVATION
12	NORTH ABUTMENT PLAN & ELEVATION
13	ABUTMENT DETAILS 1 OF 4
14	ABUTMENT DETAILS 2 OF 4
15	ABUTMENT DETAILS 3 OF 4
16	ABUTMENT DETAILS 4 OF 4
17	WINGWALL DETAILS
18	MOMENT SLAB DETAILS
19	APPROACH SLAB DETAILS
20	FRAMING PLAN
21	TYPICAL SECTION
22	BEAM DETAILS 1 OF 6
23	BEAM DETAILS 2 OF 6
24	BEAM DETAILS 3 OF 6
25	BEAM DETAILS 4 OF 6
26	BEAM DETAILS 5 OF 6
27	BEAM DETAILS 6 OF 6
28	DIAPHRAGM & UTILITY SUPPORT DETAILS 1 OF 2
29	DIAPHRAGM & UTILITY SUPPORT DETAILS 2 OF 2
30	END DIAPHRAGM DETAILS
31	BEARING DETAILS
32	S3-MTL4 BRIDGE RAILING DETAILS 1 OF 2
33	S3-MTL4 BRIDGE RAILING DETAILS 2 OF 2
34	PRECAST HIGHWAY GUARDRAIL TRANSITION DETAILS 1 OF 2
35	PRECAST HIGHWAY GUARDRAIL TRANSITION DETAILS 2 OF 2

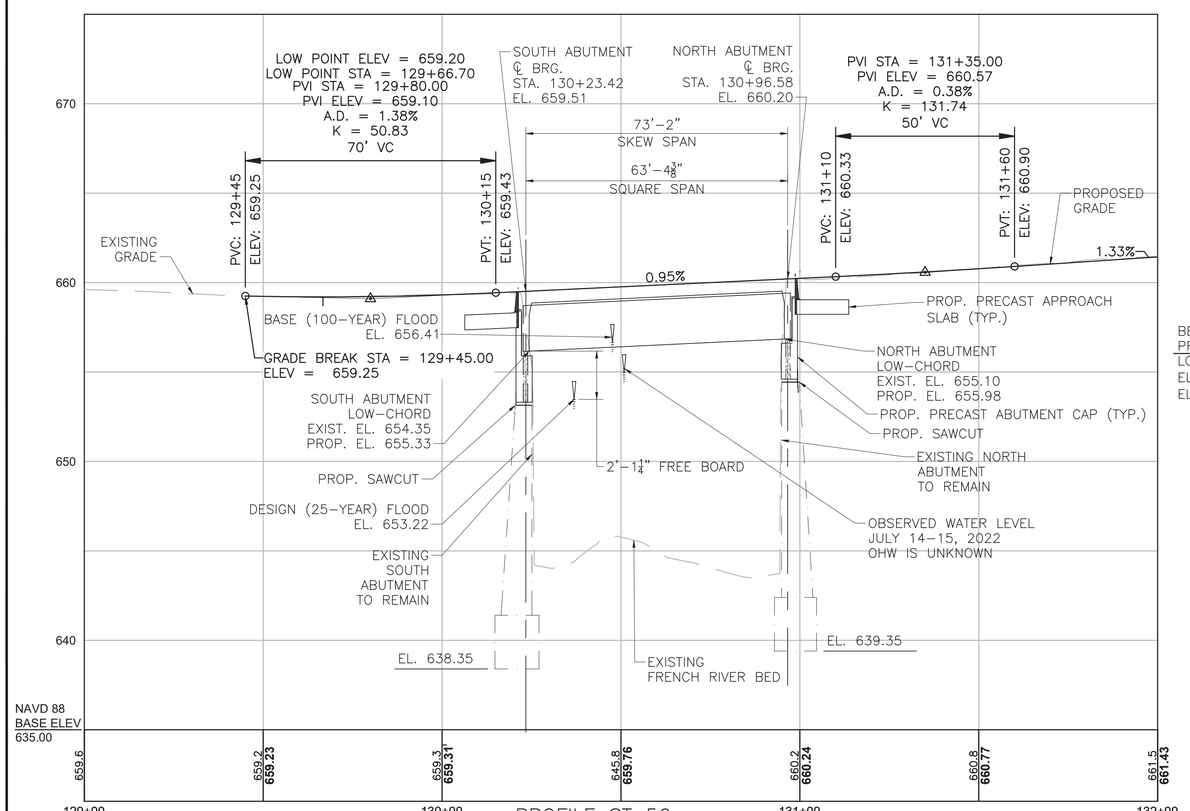

PROFILE ST 56
HORIZONTAL SCALE: 1" = 20'
VERTICAL SCALE 1" = 2'

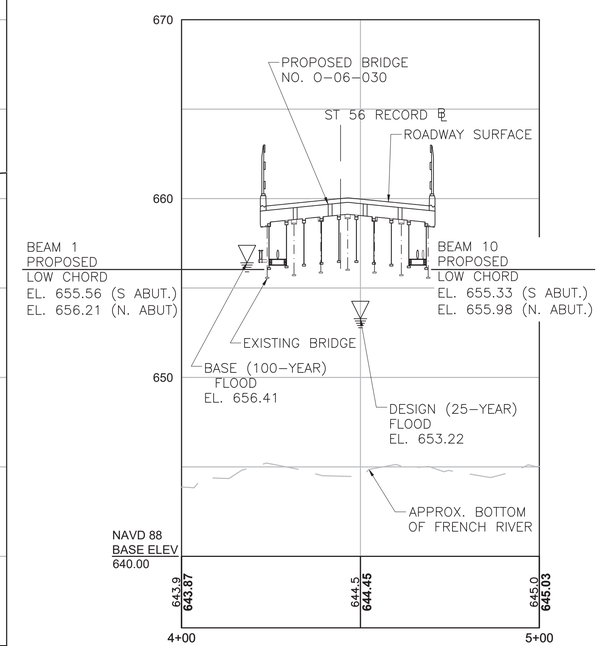

PROFILE FRENCH RIVER
HORIZONTAL SCALE: 1" = 20'
VERTICAL SCALE 1" = 2'

COMMONWEALTH OF MASSACHUSETTS
ROBERT T. ELLIOTT JR
CIVIL
No. 54969
REGISTERED PROFESSIONAL ENGINEER

Robert Elliott, Jr., P.E.
Digitally signed by Robert Elliott, Jr. P.E.
Date: 2026.09.03 12:16:41 -04'00'

CDR MAGUIRE ENGINEERING
CDR Maguire
35 Village Road, Suite 100
Middleton, MA 01949

SEPT. 19, 2026 | ISSUED FOR CONSTRUCTION

massDOT Massachusetts Department of Transportation Highway Division

PROPOSED SUPERSTRUCTURE REPLACEMENT
OXFORD
ST 56 (LEICESTER STREET)
OVER FRENCH RIVER

MASSACHUSETTS DEPARTMENT OF TRANSPORTATION
HIGHWAY DIVISION
10 PARK PLAZA BOSTON, MASS

Alexander K. Bardow, P.E.
Digitally signed by Alexander K. Bardow, P.E.
Date: 2026.09.03 12:55:49 -04'00'
STATE BRIDGE ENGINEER

Carrie Lavallee
Digitally signed by Carrie Lavallee, P.E.
Date: 2026.09.11 09:16:57 -04'00'
CHIEF ENGINEER

SHEET 1 OF 35 SHEETS BRIDGE NO. O-06-030 (1D5)

605323_BR_01(O06030)(1ST_SHEET).DWG Plotted on 3-Sep-2026 7:11 AM

02-September-2026 Final Structural Submittal (SF)

DESIGN:

IN ACCORDANCE WITH THE AMERICAN ASSOCIATION OF STATE HIGHWAY AND TRANSPORTATION OFFICIALS LRFD BRIDGE DESIGN SPECIFICATIONS, 9TH EDITION, 2020, FOR HL-93 LOADING.

MASSDOT BENCH MARK:

BENCHMARK NO.	NORTHING	EASTING	EL.
1	2893963.215	548246.492	665.79
2	2894685.647	548487.738	670.33
3	2894705.335	548369.430	670.48

ELEVATIONS ARE BASED ON THE NORTH AMERICAN VERTICAL DATUM (NAVD) OF 1988.

DATE:

TO BE PLACED ON THE INSIDE FACE OF THE NORTHWEST AND SOUTHEAST HIGHWAY GUARDRAIL TRANSITIONS. A SHEET SHOWING SIZE AND CHARACTER OF NUMERALS WILL BE FURNISHED. THE DATE USED SHALL BE THE LATEST YEAR OF CONTRACT COMPLETION AS OF THE DATE THE FIRST HIGHWAY GUARDRAIL TRANSITION IS CONSTRUCTED. BOTH HIGHWAY GUARDRAIL TRANSITIONS SHALL FEATURE THE SAME DATE.

MASSDOT SURVEY NOTEBOOKS:

ELECTRONIC SURVEY WAS USED. COPIES OF FILES MAY BE OBTAINED FROM MASSDOT.

SCALES:

SCALES NOTED ON THE PLANS ARE NOT APPLICABLE TO REDUCED SIZE PRINTS. DIVIDE SCALES BY 2 FOR HALF-SIZE PRINTS (A3).

FOUNDATIONS:

FOUNDATIONS MAY BE ALTERED, IF NECESSARY, TO SUIT CONDITIONS ENCOUNTERED DURING CONSTRUCTION, WITH APPROVAL OF THE ENGINEER.

UNSUITABLE MATERIAL:

ALL UNSUITABLE MATERIAL SHALL BE REMOVED WITHIN THE LIMITS OF THE FOUNDATIONS OF THE STRUCTURE, AS DIRECTED BY THE ENGINEER.

CONCRETE:

UNLESS OTHERWISE SPECIFIED, ALL CONCRETE SHALL BE 5000 HP CONCRETE.

ALL CIP AND PRECAST CONCRETE POURS SHOWN ON THESE CONSTRUCTION DRAWINGS WHERE ALL VOLUMETRIC DIMENSIONS ARE 4 FEET OR GREATER SHALL BE CONSIDERED TO BE MASS CONCRETE PLACEMENTS AND SHALL REQUIRE A HEAT OF HYDRATION ANALYSIS AND THERMAL CONTROL PLAN, AS SPECIFIED IN THE MASSDOT STANDARD SPECIFICATIONS.

REINFORCEMENT:

REINFORCING STEEL SHALL BE EPOXY COATED AND SHALL CONFORM TO THE REQUIREMENTS OF AASHTO-M31 GRADE 60. UNLESS OTHERWISE NOTED ON THE CONSTRUCTION DRAWINGS, ALL BARS SHALL BE LAPPED AS FOLLOWS:

MODIFICATION CONDITION	#4 BARS	#5 BARS	#6 BARS
1. NONE	16"	17"	21"
2. 12" OF CONCRETE BELOW BAR	18"	22"	27"
3. COATED BARS, COVER < 3db, OR CLEAR SPACING <6db	21"	26"	31"
4. COATED BARS, ALL OTHER CASES	17"	21"	25"
5. CONDITION 2. AND 3.	23"	29"	35"
6. CONDITION 2. AND 4.	21"	27"	32"

ALL OTHER BARS SHALL BE LAPPED AS SHOWN ON THE CONSTRUCTION DRAWINGS.

CONSTRUCTION REQUIREMENTS AND PROCEDURES:

THE CONTRACTOR SHALL TAKE THE PROPER PRECAUTIONS TO ENSURE THE STABILITY AND SAFE PERFORMANCE OF ALL STRUCTURAL ELEMENTS DURING DEMOLITION AND CONSTRUCTION.

CONSTRUCTION JOINTS:

CONSTRUCTION JOINTS, OTHER THAN THOSE SHOWN ON THE PLANS, WILL NOT BE PERMITTED WITHOUT THE PRIOR APPROVAL OF THE ENGINEER.

DRILL AND GROUT REINFORCEMENT:

WHERE NOTED, HOLE FOR BARS SHALL BE DRILLED, CLEANED AND PREPARED PER CHOSEN GROUT MANUFACTURER.

DRILL HOLE DIAMETER FOR GROUTED BARS SHALL BE 1" LARGER THAN BAR DIAMETER OR PER GROUT MANUFACTURER'S RECOMMENDATIONS. GROUT SHALL BE HIGH STRENGTH NON-SHRINK GROUT CAPABLE OF DEVELOPING 6000 PSI WITHIN 3 DAYS AND SHALL BE SELECTED FROM MASSDOT QUALIFIED CONSTRUCTION MATERIALS LIST (QCML).

FOR CMP VOID LOCATIONS, SEE SHEETS 11, 12, 13, 15, AND 16. CMP VOID DIAMETER MAY BE INCREASED TO NEAREST WHOLE INCH BASED ON MATERIAL AVAILABILITY.

DOWELS IN EXISTING ABUTMENT SHALL BE INSTALLED PRIOR TO SETTING THE ABUTMENT CAP. FOR DRILL AND GROUT REQUIREMENTS, SEE GENERAL NOTES ON THIS SHEET AND SPECIAL PROVISIONS ITEM 995.

EXISTING CONDITIONS:

ALL DIMENSIONS AND DETAILS SHOWN FOR EXISTING STRUCTURE ARE NOT GUARANTEED. ALL DIMENSIONS FOR THE EXISTING STRUCTURE ARE TAKEN FROM THE EXISTING (1964) BRIDGE PLANS AND THE REHABILITATION (2001) BRIDGE PLANS WITH ELEVATIONS ADJUSTED TO THE CURRENT PROJECT DATUM (NAVD 1988). THE CONTRACTOR SHALL DETERMINE AND ESTABLISH ALL DIMENSIONS AND DETAILS NECESSARY FOR COMPLETION OF ALL WORK BY FIELD MEASUREMENTS AND SURVEY. THE CONTRACTOR SHALL BE RESPONSIBLE FOR THE ADEQUACY AND ACCURACY THEREOF AND SHALL NOT ORDER ANY MATERIAL OR COMMENCE ANY FABRICATION UNTIL HE HAS MADE THE REQUIRED MEASUREMENTS ON THE ACTUAL STRUCTURE AND THE EXTENT OF THE PROPOSED WORK HAS BEEN APPROVED BY THE ENGINEER. EXISTING STRUCTURE IS SHOWN IN A LIGHTER LINE WEIGHT.

THE WATER LEVELS RECORDED ON THE PLANS ARE THOSE MEASURED ON THE DATES GIVEN AND DO NOT NECESSARILY REPRESENT WATER LEVELS AT THE TIME OF CONSTRUCTION. IT IS THE CONTRACTOR'S RESPONSIBILITY TO VERIFY THE WATER LEVELS. PARTICULAR ATTENTION SHOULD BE GIVEN TO UPSTREAM OR DOWNSTREAM FACILITIES AND CONTROL STRUCTURES WHICH MAY ADVERSELY AFFECT THE WATER LEVELS WITHIN THE RIVER/STREAM WATER BODY WHICH MASSDOT HAS NO CONTROL OVER. THERE WILL BE NO ADDITIONAL COMPENSATION FOR WORK INVOLVING VARYING WATER LEVELS OR THOSE THAT DIFFER FROM THE INFORMATION RECORDED ON THE PLANS.

EXISTING BRIDGE PLANS:

PLANS FOR THE EXISTING BRIDGE MAY BE SEEN AT THE OFFICE OF THE BRIDGE ENGINEER, MASSACHUSETTS DEPARTMENT OF TRANSPORTATION HIGHWAY DIVISION, 10 PARK PLAZA, BOSTON, MASSACHUSETTS.

UTILITIES:

THE CONTRACTOR SHALL LOCATE AND PROTECT FROM DAMAGE ALL EXISTING UTILITIES. THE CONTRACTOR SHALL COORDINATE AND COOPERATE WITH THE RESPECTIVE UTILITY OWNERS FOR ALL UTILITIES THAT ARE TO BE TEMPORARILY OR PERMANENTLY RELOCATED FOR BRIDGE REPLACEMENT WORK.

TRAFFIC:

TRAFFIC DETOUR WILL BE AS SHOWN ON THE TEMPORARY TRAFFIC CONTROL PLANS.

SECTION MARK:

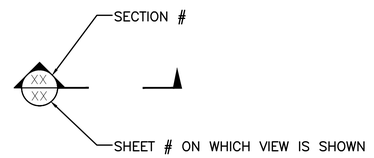

– INDICATES DETAIL IS FOUND ON THAT SHEET

OXFORD
LEICESTER STREET/ST 56

STATE	FED. AID PROJ. NO.	SHEET NO.	TOTAL SHEETS
MA	HIP(NGB)-004S(015)X	27	66
PROJECT FILE NO. 605323			

GENERAL NOTES

TRAFFIC DATA	ROADWAY OVER	ROADWAY UNDER
DESIGN YEAR	2047	YEAR
AVERAGE DAILY TRAFFIC – PRESENT	8486	ADT
AVERAGE DAILY TRAFFIC – DESIGN YEAR	9547	ADT
DESIGN HOURLY VOLUME	897	DHV
DIRECTIONAL DISTRIBUTION	51%	DIST
TRUCK PERCENTAGE – AVERAGE DAY	7.2%	ADTT
TRUCK PERCENTAGE – PEAK HOUR	3.5%	PHTT
DESIGN SPEED	50 MPH	DES
DIRECTIONAL DESIGN HOURLY VOLUME	457	DDHV

SEISMIC DESIGN CRITERIA	
DESIGN RETURN PERIOD:	1000-YR
DESIGN SPECTRA	
As	0.098G
SDs	0.211G
SD1	0.089G
SITE CLASS	D
SEISMIC DESIGN CATEGORY (SDC)	A

HYDRAULIC DESIGN FLOOD (HDF) DATA	
DRAINAGE AREA (SQ. MILES)	20.1
HDF DISCHARGE (C.F.S.)	2,850
HDF FREQUENCY (YEARS)	25
HDF VELOCITY (F.P.S.)	7.47
HDF ELEVATION (FEET, NAVD)	653.22
BASE (100-YEAR) FLOOD DATA	
BASE FLOOD DISCHARGE (C.F.S.)	4,420
BASE FLOOD ELEVATION (FEET, NAVD, UPSTREAM)	656.41
SCOUR DESIGN FLOOD (SDF) EVENT DATA	
SDF EVENT FREQUENCY (YEARS)	50
SDF ELEVATION (FEET, NAVD, UNDER BRIDGE)	654.64
SDF TOTAL SCOUR DEPTH AT ABUTMENT (FEET)	1.5
SDF TOTAL SCOUR DEPTH AT PIER (FEET)	N/A
SCOUR CHECK FLOOD (SCF) EVENT DATA	
SCF EVENT FREQUENCY (YEARS)	100
SCF ELEVATION (FEET, NAVD, UNDER BRIDGE)	656.11
CHECK FLOOD ABUTMENT SCOUR DEPTH (FEET)	4.11
CHECK FLOOD PIER SCOUR DEPTH (FEET)	N/A
FLOOD OF RECORD	
DISCHARGE (C.F.S.)	1,020
FREQUENCY (IF KNOWN, YEARS)	N/A
MAXIMUM ELEVATION (FEET, NAVD)	N/A
DATE (MM/YYYY)	04/1960
HISTORY OF ICE FLOES	N/A
EVIDENCE OF SCOUR AND EROSION	N/A

DATE	DESCRIPTION
SEPT. 19, 2026	ISSUED FOR CONSTRUCTION

THIS SHEET IS APPROVED FOR CONSTRUCTION BY MASSDOT
AUTHORIZED SIGNATORY: STATE BRIDGE ENGINEER

USE ONLY PRINTS OF LATEST DATE

605323_BR_02(O06030)(2ND_SHEET).DWG Plotted on 3-Sep-2026 7:11 AM
02-September-2026
Final Structural Submittal (SF)

massDOT Highway

Boring Log

LAMSON ENGINEERING COPORATION
437 Cherry Street, #109, Newton, Massachusetts 02465
Phone: (617) 558-0101

Boring No. BB-1 Page 1/2
Scale 1" = 5 '

City/Town: Oxford	Bridge No.: O-06-030	Project File No: 605323	Contract No.:
Location: ST 56 (Leicester Street) over French River		Date & Time Started: 9/12/23 1:30 PM	Total Hours:
Groundwater Depth: 13'8"	Date & Time: 9/13/23 8:00 AM	Date & Time Completed: 9/14/23 2:30 PM	11
Coordinates: N 2894045.06 E 548335.87	Ground Elevation (Feet): 659.06'	Inspector's Name: Edward Mahoney	
Drilling Company: New England Boring Contractors	Driller's Name: Mark D'Ambrosio	Helper's Name: Dave Salsamo *	

Sample Number	Depth Range (Feet)	Blow Counts per 6 Inches / Coring Times Minute Per Foot				Recovery (inches)	Field Description	Strata Changes	Elev.
S-1	0'-7" 7"-2'7"	13	14	11	11	15"	ASPHALT Dry, medium dense, light brown, FINE TO COARSE SAND, some fine to coarse gravel	7"	
S-2	5'-7'	10	7	9	11	10"	Dry, medium dense, brown, FINE TO COARSE SAND, some fine to coarse gravel		655
S-3	9'-11'	13	15	15	15	1"	Wet, medium dense, black, BROKEN COBBLE (cobble being pushed down)	9' 12'	650
WR							9/13/23 - WATER READING	13'8"	
S-4	14'-16'	7	7	6	9	7"	Wet, medium dense, brown, FINE TO COARSE SAND, and fine to coarse gravel		645
S-5	19'-21'	15	25	29	33	11"	Wet, very dense, brown-black, FINE TO COARSE BROKEN GRAVEL, some fine to coarse sand, trace of inorganic silt		640
S-6	24'-25'	4	10			9"	Wet, stiff, gray, CLAY, trace of inorganic silt	24'	635
6A	25'-26'			14	15	9"	Wet, medium dense, brown, FINE TO COARSE SAND, some inorganic silt, some fine to coarse gravel	25'	
S-7	29'-31'	13	14	17	18	11"	Wet, dense, brown-black, FINE TO COARSE SAND, and fine to coarse broken gravel, trace of inorganic silt		630

Bot. footing south abut. (approx.)
El. 638.35

Notes: * 9/14/23 Rick Larhette Charlton Police - 9/12/23 Mike Novak, 9/13/23 Ian Haggerty, 9/14/23 - Dennis Lebouf. Four attempts were made to core the South abutment, AC-1 was terminated due to rebar

Arrow Board:-
Signs:- 1
Cones:- 14

Protective Device Stand:- Box:-
Well Depth:- Solid Pipe:-
Stick Up Pipe:- Screen Pipe:-

Type of Drill Rig: GT8 (Truck)
Hammer Weight: 140 lbs Fall: 30"
Casing Types: Drive
Size: 4"
Depth: 45'
Sampler Type: SS Size: 1 3/8" ID
Automatic Hammer Weight: 140 lbs
Safety Hammer Weight:
Donut Hammer Weight: Fall: 30"
Core Barrel Type: NX Size: 2.15"

Penetration Resistamnce (N) Guide:

Cohesioness Soils (Sands, Gravels)		Cohesive Soils (silts, Clays)	
Relative Density	Penetration Resistance	Consistency	Penetration Resistance
Very Loose	0 - 4	Very Soft	0 - 2
Loose	4 - 10	Soft	2 - 4
Medium Dense	10 - 30	Medium Stiff	4 - 8
Dense	30 - 50	Stiff	8 - 15
Very Dense	Over 50	Very Stiff	15 - 30
N=Sum of Second and Third 6" Blow Counts		Hard	Over 30

Terms Used for Second Entry of Descriptions: and=40-50%,some=10-40%,trace=10% or less

BORING BB–1 (1 OF 2)
SCALE: ¼" = 1'–0"

massDOT Highway

Boring Log

LAMSON ENGINEERING COPORATION
437 Cherry Street, #109, Newton, Massachusetts 02465
Phone: (617) 558-0101

Boring No. BB-1 Page 2/2
Scale 1" = 5 '

Sample Number	Depth Range (Feet)	Blow Counts per 6 Inches / Coring Times Minute Per Foot					Recovery (inches)	Field Description	Strata Changes	Elev.
S-8	34'-36'	18	27	32	35		16"	Wet, very dense, brown, FINE TO COARSE SAND, and fine to coarse broken gravel, trace of inorganic silt		625
S-9	39'-41'	31	27	37	43		16"	Wet, very dense, brown, FINE TO COARSE SAND, some fine gravel, trace of inorganic silt (sand lenses)		620
C-1	43'6"-44' 44'-49'	3.5	3.5	4	2	3.5	60"	Top of Weathered Bedrock Rollerbit to 44' Hard, gray, slightly fractured, SCHIST Void 47'1" to 47'6" Recovery - 55"/60"=92% RQD - 47"/60"=78%	43'6" 44'	615
C-2	49'-54'	3.5	4	3.5	2	3.5	58"	Hard, gray, multiple fractures, SCHIST core barrel jamming up at 51.5' Recovery - 58"/60"=97% RQD - 36"/60"=60%		610
								Bottom of Exploration @ 54'	54'	605
										600
										595
										590
										585

BORING BB–1 (2 OF 2)
SCALE: ¼" = 1'–0"

STA. 129+93.12 OFF. 14.80' R
N: 2894045.06
E: 548335.87

NOTES:

1. LOCATION OF BORING SHOWN ON THE PLAN THUS: BB–1
   LOCATION OF THE PROBES SHOWN ON THE PLANS THUS: P–1
   LOCATION OF ABUTMENT CORES ON THE PLAN THUS: AC–1
2. BORINGS ARE TAKEN FOR PURPOSE OF DESIGN AND SHOW CONDITIONS AT BORING POINTS ONLY, BUT DO NOT NECESSARILY SHOW THE NATURE OF THE MATERIALS TO BE ENCOUNTERED DURING CONSTRUCTION.
3. WATER LEVELS SHOWN ON THE BORING LOGS WERE OBSERVED AT THE TIME OF TAKING BORINGS AND DO NOT NECESSARILY SHOW THE TRUE GROUND WATER LEVEL.
4. FIGURES IN COLUMNS INDICATE NUMBER OF BLOWS REQUIRED TO DRIVE A 1 3/8" I.D. SPLIT SPOON SAMPLER 6" USING A 140 POUND WEIGHT FALLING 30".
5. BORING SAMPLES ARE STORED AT A STORAGE FACILITY LOCATED ON ROUTE 114 (219 WINTHROP AVE.) IN LAWRENCE, MA. THE CONTRACTOR MAY EXAMINE THE SOIL AND ROCK SAMPLES BY CONTACTING THE MASSDOT GEOTECHNICAL SECTION AT 10 PARK PLAZA, BOSTON, MA.
6. ALL BORINGS WERE MADE IN AUGUST AND SEPTEMBER 2023, AND FEBRUARY 2024.
7. BORINGS WERE MADE BY NEW ENGLAND BORING CONTRACTORS.
8. THE NORTH AMERICAN VERTICAL DATUM (NAVD) OF 1988 IS USED THROUGHOUT.

SEPT. 19, 2026	ISSUED FOR CONSTRUCTION
DATE	DESCRIPTION

THIS SHEET IS APPROVED FOR CONSTRUCTION BY MASSDOT AUTHORIZED SIGNATORY: STATE BRIDGE ENGINEER
USE ONLY PRINTS OF LATEST DATE

605323_BR_03-08(O06030)(BORING_LOGS).DWG Plotted on 3-Sep-2026 7:11 AM
02-September-2026
Final Structural Submittal (SF)

massDOT Highway

Boring Log

LAMSON ENGINEERING COPORATION
437 Cherry Street, #109, Newton, Massachusetts 02465
Phone: (617) 558-0101

Boring No. BB-2 — Page 1/2
Scale 1" = 5 '

City/Town: Oxford | Bridge No.: O-06-030 | Project File No: 605323 | Contract No.:
Location: ST 56 (Leicester Street) over French River | Date & Time Started: 9/11/23 9:00 AM | Total Hours:
Groundwater Depth: 13'8" | Date & Time: 9/12/23 12:30 PM | Date & Time Completed: 9/12/23 1:00 PM | 7.5
Coordinates: N 2894180.38 E 548331.73 | Ground Elevation (Feet): 660.34' | Inspector's Name: Edward Mahoney
Drilling Company: New England Boring Contractors | Driller's Name: Mark D'Ambrosio | Helper's Name: Will Sevigny *

Sample Number	Depth Range (Feet)	Blow Counts per 6 Inches / Coring Times Minute Per Foot				Recovery (inches)	Field Description	Strata Changes	Elev.
S-1	0'-7" 7"-2'7"	18	24	49	43	12"	ASPHALT Dry, very dense, brown, FINE TO COARSE SAND, some fine to coarse gravel	7"	660
S-2	4'6"-6'6"	9	4	5	9	19"	Moist, loose, light brown, FINE SAND, some fine to medium gravel, trace of inorganic silt, trace of coarse sand		655
S-3	9'-11'	23	21	17	17	7"	Moist, dense, gray, FINE TO COARSE SAND, some fine to medium gravel, trace of inorganic silt		650
WR							9/12/23 - WATER READING	13'8"	
S-4	14'-16'	15	16	13	8	5"	Wet, medium dense, gray, FINE TO COARSE SAND, some fine to coarse gravel, (Piece of broken cobble in nose)		645
S-5	19'-20'	15	6			4"	Wet, medium dense, brown, FINE TO COARSE SAND, some fine to coarse gravel, trace of inorganic silt	20'	
5A	20'-21'			9	7	4"	Wet, medium dense, gray, FINE SAND, some inorganic silt, trace of coarse sand, trace of fine gravel		640
S-6	24'-25'6"	41	38	114		10"	Wet, very dense, brown-black, FINE TO COARSE SAND, fine to coarse weathered gravel, trace of inorganic silt	24'	635
S-7	29'-31'	24	29	51	131	17"	Wet, very dense, brown-black, WEATHERED BOULDERS, some sand lenses	29'	630

Bot. footing north abut. (approx.) El. 639.35

Notes: * 9/13/23 - Dave Salsamo Charlton Police - 9/1/23 & 9/12/23 Mike Novak
S-8,9 & 10 were taken by safety hammer (auto hammer broke down)
For bottom of footing for the North abutment refer to AC-2 coring log

Arrow Board:- Signs:- Cones:- 7

Protective Device Stand:- Box:-
Well Depth:- Solid Pipe:-
Stick Up Pipe:- Screen Pipe:-

Type of Drill Rig: GT8 (Truck)
Hammer Weight: 140 lbs Fall: 30"
Casing Types: Drive Spin
Size: 4" 3"
Depth: 35' 50"
Sampler Type: SS Size: 1 3/8" ID
Automatic Hammer Weight: 140 lbs
Safety Hammer Weight:
Donut Hammer Weight: Fall: 30"
Core Barrel Type: NX Size: 2.15"

Penetration Resistamnce (N) Guide:

Cohesioness Soils (Sands, Gravels)		Cohesive Soils (silts, Clays)	
Relative Density	Penetration Resistance	Consistency	Penetration Resistance
Very Loose	0 - 4	Very Soft	0 - 2
Loose	4 - 10	Soft	2 - 4
Medium Dense	10 - 30	Medium Stiff	4 - 8
Dense	30 - 50	Stiff	8 - 15
Very Dense	Over 50	Very Stiff	15 - 30
N=Sum of Second and Third 6" Blow Counts		Hard	Over 30

Terms Used for Second Entry of Descriptions: and=40-50%,some=10-40%,trace=10% or less

BORING BB–2 (1 OF 2)
SCALE: ¼" = 1'–0"

STA. 131+25.94 OFF. 11.40' L
N: 2894180.38
E: 548331.73

massDOT Highway

Boring Log

LAMSON ENGINEERING COPORATION
437 Cherry Street, #109, Newton, Massachusetts 02465
Phone: (617) 558-0101

Boring No. BB-2 — Page 2/2
Scale 1" = 5 '

Sample Number	Depth Range (Feet)	Blow Counts per 6 Inches / Coring Times Minute Per Foot					Recovery (inches)	Field Description	Strata Changes	Elev.
S-8	34'-35'	67	123				10"	Wet, very dense, light brown-gray, FINE TO COARSE SAND, some fine to coarse gravel, trace of inorganic silt		625
S-9	39'-40'6"	33	47	81			10"	Wet, very dense, brown-black, FINE TO COARSE SAND, some fine to coarse gravel, trace of inorganic silt		620
S-10	44'-46'	27	24	25	26		17"	Wet, dense, light brown trace of orange, FINE TO COARSE SAND, some fine to medium gravel, some inorganic silt		615
								Top of Weathered Bedrock	47'6"	
	47'6"-48'6"							Rollerbit to 48'6"	48'6"	
C-1	48'6"-53'6"	4	4	3.5	3.5	4	60"	Hard, gray, multiple fractures, SCHIST Recovery - 60"/60"=100% RQD - 50"/60"=83%		610
C-2	53'6"-58'6"	3	2.5	2	2.5	3.5	60"	Hard, gray, multiple fractures, SCHIST Recovery - 60"/60"=100% RQD - 51"/60"=85%		605
									58'6"	
								Bottom of Exploration @ 58'6"		600
										595
										590
										585

BORING BB–2 (2 OF 2)
SCALE: ¼" = 1'–0"

NOTES:

1. FOR BORING NOTES, SEE SHEET 3.

SEPT. 19, 2026	ISSUED FOR CONSTRUCTION
DATE	DESCRIPTION

THIS SHEET IS APPROVED FOR CONSTRUCTION BY MASSDOT AUTHORIZED SIGNATORY: STATE BRIDGE ENGINEER
USE ONLY PRINTS OF LATEST DATE

605323_BR_03-08(O06030)(BORING_LOGS).DWG Plotted on 3-Sep-2026 7:12 AM
02-September-2026
Final Structural Submittal (SF)

massDOT Highway
Probe Log

LAMSON ENGINEERING CORPORATION
437 Cherry Street, #109, Newton, Massachusetts 02465
Phone: (617) 558-0101 E Mail: Lamsoneng@msn.com

Probe No. P-1 | Page 1/1

City/Town: Oxford | Bridge No.: O-06-030 (1D5) | Project File No.: 605323 | Contract No.:
Location: ST 56 (Leicester Road) over French River | Date & Time Started: 7:30 AM 8/30/23 | Total Hours: 2.5
Coordinates: N 2,894,062.6 E 548,338.7 | Ground Elev.(Feet): 659.1' | Date & Time Completed: 10:00 AM 8/30/23
Drilling Company: New England Boring Contractors | Driller's Name: Carl Downing | Helper's Name: Will
Inspector's Name: James Gu | Type of Drill Rig: Geoprobe 6712DT | Drill Rods/Solid Augers: 1.5" Drill Rods | Type: Size: Hammer:

INFORMATION LOG

Probe Number	Depth	Distance From Deck Joints	Refusal or Required Depth
P-1A	1'10"	2'6"	Refusal
P-1B	1'10"	4'	Refusal
P-1C	1'11"	5'6"	Refusal
P-1D	1'11"	7'	Refusal
P-1E	1'11"	8'6"	Refusal

Probe Number	Depth	Distance From Deck Joints	Refusal or Required Depth
P-1F	2'	10'	Refusal
P-1G	2'	11'6"	Refusal
P-1I	25'	13'	Required Depth
P-1H	2'	12'3"	Refusal

Remarks: Coordinates and ground elevation are for first probe P-1A.

SKETCH (PLAN VIEW)

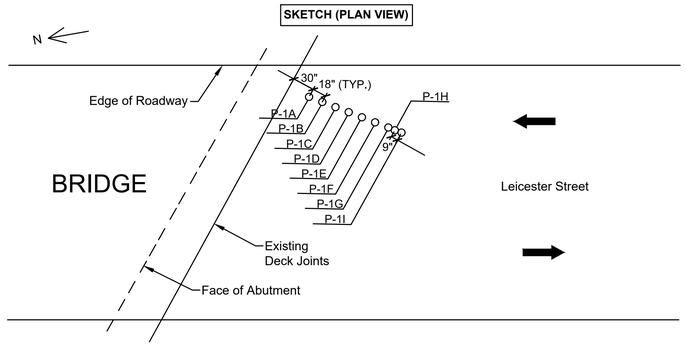

Summary: Base on the as-probed data, there is approach slab for the existing bridge substructure. This corresponds to the information shown on the existing plan.

PROBE P–1
SCALE: $\frac{1}{4}$" = 1'–0"

STA. 130+10.88 OFF. 14.73' R
N: 2894062.6
E: 548338.7

massDOT Highway
Probe Log

LAMSON ENGINEERING CORPORATION
437 Cherry Street, #109, Newton, Massachusetts 02465
Phone: (617) 558-0101 E Mail: Lamsoneng@msn.com

Probe No. P-2 | Page 1/1

City/Town: Oxford | Bridge No.: O-06-030 (1D5) | Project File No.: 605323 | Contract No.:
Location: ST 56 (Leicester Street) over French River | Date & Time Started: 10:00 AM 8/30/23 | Total Hours: 3.5
Coordinates: N 2,894,162.7 E 548,328.8 | Ground Elev.(Feet): 660.1' | Date & Time Completed: 1:30 PM 8/30/23
Drilling Company: New England Boring Contractors | Driller's Name: Carl Downing | Helper's Name: Will
Inspector's Name: James Gu | Type of Drill Rig: Geoprobe 6712DT | Drill Rods/Solid Augers: 1.5" Drill Rods | Type: Size: Hammer:

INFORMATION LOG

Probe Number	Depth	Distance From Deck Joints	Refusal or Required Depth
P-1A	1'6"	2'6"	Refusal
P-1B	1'6"	4'	Refusal
P-1C	1'6"	5'6"	Refusal
P-1D	1'6"	7'	Refusal
P-1E	1'6"	8'6"	Refusal

Probe Number	Depth	Distance From Deck Joints	Refusal or Required Depth
P-1F	1'11"	10'	Refusal
P-1G	2'	11'6"	Refusal
P-1H	2'	13'	Refusal
P-1J	25'	14'6"	Required Depth
P-1I	2'	13'9"	Refusal

Remarks: Coordinates and ground elevation are for first probe P-2A.

SKETCH (PLAN VIEW)

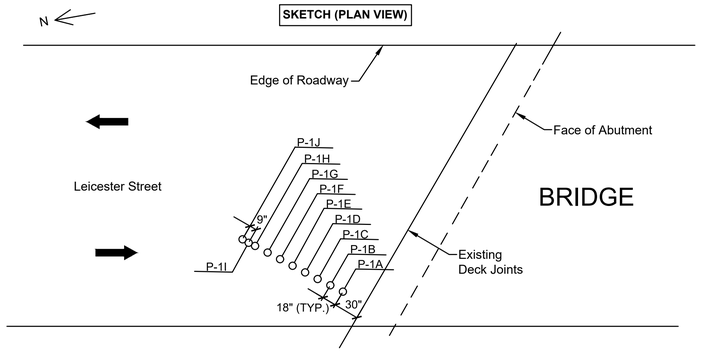

Summary: Base on the as-probed data, there is approach slab for the existing bridge substructure. This corresponds to the information shown on the existing plan.

PROBE P–2
SCALE: $\frac{1}{4}$" = 1'–0"

STA. 131+08.02 OFF. 11.40' L
N: 2894162.7
E: 548328.8

NOTES:

1. FOR BORING NOTES, SEE SHEET 3.

SEPT. 19, 2026	ISSUED FOR CONSTRUCTION
DATE	DESCRIPTION

THIS SHEET IS APPROVED FOR CONSTRUCTION BY MASSDOT
AUTHORIZED SIGNATORY: STATE BRIDGE ENGINEER
USE ONLY PRINTS OF LATEST DATE

605323_BR_03-08(O06030)(BORING_LOGS).DWG Plotted on 3-Sep-2026 7:12 AM
Final Structural Submittal (SF) 02-September-2026

OXFORD
LEICESTER STREET/ST 56

STATE	FED. AID PROJ. NO.	SHEET NO.	TOTAL SHEETS
MA	HIP(NGB)-004S(015)X	31	66
PROJECT FILE NO.	605323		

CONCRETE CORING LOGS 1 OF 3

massDOT Highway — Boring Massachusetts Forward
Boring Log

LAMSON ENGINEERING CORPORATION
437 Cherry Street, Suite #109, Newton, Massachusetts 02465
Phone: (617) 558-0101 E-Mail: Klam@lamsonengineering.com

Boring No. AC-1a (Bridge Boring) — Page 1/1 — Scale: 1" = 5'

City/Town: Oxford, MA	Bridge No.: O-06-030 (1D5)	Project File No.: 605323	Contract No.: -
Location: ST 56 (Leicester Road) over French River		Date & Time Started: 2/15/24 8:30 AM	Total Hours:
Groundwater Depth (Feet): N/A Date & Time: N/A		Date & Time Completed: 2/15/24 11:30 AM	3
Coordinates: *N 2,894,079.0 *E 548,312.2	Ground Elevation (Feet): 659.03'	Inspector's Name: James Gu	
Drilling Company: New England Boring Contractors	Driller's Name: Garrett Peacock	Helper's Name: Matt Foden	

Sample Number	Depth Range (Feet)	Blow Counts per 6 Inches / Coring Times Minute Per Foot	Recovery (inches)	Field Description	Strata Changes
				- 1st Attempt: 18" south from joint, coring terminated @ 3' due to rebar obstruction (core bit burn out).	

Notes: *Moved AC-1 toward bridge railing from "10' from railing" to "8' from railing" due to road traffic.
Oxford PD: Jeffrey White #1893

Arrow-Board: - Signs: - Cones: 17

Protective Device Stand: - Box: - Well Depth: - Solid Pipe: - Stick Up Pipe: - Screen Pipe: -

Type of Drill Rig: B53 truck
Hammer Weight: 140 lbs Fall: 30"
Casing Types: HW NW
Size: 4"
Depth: 3'
Sampler Type: S/S Size: 1 3/8" ID
Automatic Hammer Weight: 140 lbs
Safety Hammer Weight:
Donut Hammer Weight: Fall: 30"
Core Barrel Type: NX Size: 2.15" ID

Penetration Resistance (N) Guide:

Cohesionless Soils (Sands, Gravels)		Cohesive Soils (Silts, Clays)	
Relative Density	Penetration Resistance	Consistency	Penetration Resistance
Very Loose	0 - 4	Very Soft	0 - 2
Loose	4 - 10	Soft	2 - 4
Medium Dense	10 - 30	Medium Stiff	4 - 8
Dense	30 - 50	Stiff	8 - 15
Very Dense	Over 50	Very Stiff	15 - 30
N=Sum of Second and Third 6" Blow Counts		Hard	Over 30

Terms Used for Second Entry of Descriptions: and = 40-50%, some = 10-40%, trace = 10% or less

CONCRETE CORING AC–1A
SCALE: 1/4" = 1'–0"

STA. 130+23.72 OFF. 14.26' L
N: 2894079.0
E: 548312.2

massDOT Highway — Boring Massachusetts Forward
Boring Log

LAMSON ENGINEERING CORPORATION
437 Cherry Street, Suite #109, Newton, Massachusetts 02465
Phone: (617) 558-0101 E-Mail: Klam@lamsonengineering.com

Boring No. AC-1b (Bridge Boring) — Page 1/1 — Scale: 1" = 5'

City/Town: Oxford, MA	Bridge No.: O-06-030 (1D5)	Project File No.: 605323	Contract No.: -
Location: ST 56 (Leicester Road) over French River		Date & Time Started: 2/15/24 11:30 AM	Total Hours:
Groundwater Depth (Feet): N/A Date & Time: N/A		Date & Time Completed: 2/15/24 1:30 PM	2
Coordinates: *N 2,894,080.0 *E 548,312.2	Ground Elevation (Feet): 659.03'	Inspector's Name: James Gu	
Drilling Company: New England Boring Contractors	Driller's Name: Garrett Peacock	Helper's Name: Matt Foden	

Sample Number	Depth Range (Feet)	Blow Counts per 6 Inches / Coring Times Minute Per Foot	Recovery (inches)	Field Description	Strata Changes
				- 2nd Attempt: 6" south from joint, coring terminated @ 2'6" due to boring hole collapse.	

Notes: *Moved AC-1 toward bridge railing from "10' from railing" to "8' from railing" due to road traffic.
Oxford PD: Jeffrey White #1893

Arrow-Board: - Signs: - Cones: 17

Protective Device Stand: - Box: - Well Depth: - Solid Pipe: - Stick Up Pipe: - Screen Pipe: -

Type of Drill Rig: B53 truck
Hammer Weight: 140 lbs Fall: 30"
Casing Types: HW NW
Size: 4"
Depth: 3'
Sampler Type: S/S Size: 1 3/8" ID
Automatic Hammer Weight: 140 lbs
Safety Hammer Weight:
Donut Hammer Weight: Fall: 30"
Core Barrel Type: NX Size: 2.15" ID

Penetration Resistance (N) Guide:

Cohesionless Soils (Sands, Gravels)		Cohesive Soils (Silts, Clays)	
Relative Density	Penetration Resistance	Consistency	Penetration Resistance
Very Loose	0 - 4	Very Soft	0 - 2
Loose	4 - 10	Soft	2 - 4
Medium Dense	10 - 30	Medium Stiff	4 - 8
Dense	30 - 50	Stiff	8 - 15
Very Dense	Over 50	Very Stiff	15 - 30
N=Sum of Second and Third 6" Blow Counts		Hard	Over 30

Terms Used for Second Entry of Descriptions: and = 40-50%, some = 10-40%, trace = 10% or less

CONCRETE CORING AC–1B
SCALE: 1/4" = 1'–0"

STA. 130+23.72 OFF. 14.26' L
N: 2894080.0
E: 548312.2

NOTES:

1. FOR BORING NOTES, SEE SHEET 3.

DATE	DESCRIPTION
SEPT. 19, 2026	ISSUED FOR CONSTRUCTION

THIS SHEET IS APPROVED FOR CONSTRUCTION BY MASSDOT
AUTHORIZED SIGNATORY: STATE BRIDGE ENGINEER
USE ONLY PRINTS OF LATEST DATE

605323_BR_03-08(O06030)(BORING_LOGS).DWG Plotted on 3-Sep-2026 7:12 AM
Final Structural Submittal (SF) 02-September-2026

OXFORD
LEICESTER STREET/ST 56

STATE	FED. AID PROJ. NO.	SHEET NO.	TOTAL SHEETS
MA	HIP(NGB)-004S(015)X	32	66
PROJECT FILE NO.	605323		

CONCRETE CORING LOGS 2 OF 3

massDOT Highway Division
Boring Log

LAMSON ENGINEERING CORPORATION
437 Cherry Street, Suite #109, Newton, Massachusetts 02465
Phone: (617) 558-0101 E-Mail: Klam@lamsonengineering.com

Boring No. AC-1c (Bridge Boring) — Page 1/1 — Scale: 1" = 5'

City/Town: Oxford, MA	Bridge No.: O-06-030 (1D5)	Project File No.: 605323	Contract No.: -
Location: ST 56 (Leicester Road) over French River		Date & Time Started: 2/16/24 7:30 AM	Total Hours:
Groundwater Depth (Feet): N/A Date & Time: N/A		Date & Time Completed: 2/16/24 9:30 AM	2
Coordinates: *N 2,894,080.8 *E 548,312.2	Ground Elevation (Feet): 659.03'	Inspector's Name: James Gu	
Drilling Company: New England Boring Contractors		Driller's Name: Garrett Peacock	Helper's Name: Matt Foden

Sample Number	Depth Range (Feet)	Blow Counts per 6 Inches / Coring Times Minute Per Foot	Recovery (inches)	Field Description	Strata Changes
				- 3rd Attempt: 4" north from joint, coring terminated @ 3'6" due to rebar obstruction.	

Notes: *Moved AC-1 toward bridge railing from "10' from railing" to "8' from railing" due to road traffic.
Oxford PD: Jeffrey White #1893

Arrow-Board: - Signs: - Cones: 17

Protective Device Stand: - Box: -
Well Depth: - Solid Pipe: -
Stick Up Pipe: - Screen Pipe: -

Penetration Resistance (N) Guide:

Cohesionless Soils (Sands, Gravels)		Cohesive Soils (Silts, Clays)	
Relative Density	Penetration Resistance	Consistency	Penetration Resistance
Very Loose	0 - 4	Very Soft	0 - 2
Loose	4 - 10	Soft	2 - 4
Medium Dense	10 - 30	Medium Stiff	4 - 8
Dense	30 - 50	Stiff	8 - 15
Very Dense	Over 50	Very Stiff	15 - 30
N=Sum of Second and Third 6" Blow Counts		Hard	Over 30

Terms Used for Second Entry of Descriptions: and = 40-50%, some = 10-40%, trace = 10% or less

Type of Drill Rig: B53 truck
Hammer Weight: 140 lbs Fall: 30"
Casing Types: HW NW
Size: 4"
Depth: 3'
Sampler Type: S/S Size: 1 3/8" ID
Automatic Hammer Weight: 140 lbs
Safety Hammer Weight:
Donut Hammer Weight: Fall: 30"
Core Barrel Type: NX Size: 2.15" ID

CONCRETE CORING AC–1C

SCALE: 1/4" = 1'–0"

STA. 130+23.72 OFF. 14.26' L
N: 2894080.8
E: 548312.2

massDOT Highway Division
Boring Log

LAMSON ENGINEERING CORPORATION
437 Cherry Street, Suite #109, Newton, Massachusetts 02465
Phone: (617) 558-0101 E-Mail: Klam@lamsonengineering.com

Boring No. AC-1d (Bridge Boring) — Page 1/1 — Scale: 1" = 5'

City/Town: Oxford, MA	Bridge No.: O-06-030 (1D5)	Project File No.: 605323	Contract No.: -
Location: ST 56 (Leicester Road) over French River		Date & Time Started: 2/16/24 9:30 AM	Total Hours:
Groundwater Depth (Feet): N/A Date & Time: N/A		Date & Time Completed: 2/16/24 11:30 AM	2
Coordinates: *N 2,894,080.5 *E 548,312.2	Ground Elevation (Feet): 659.03'	Inspector's Name: James Gu	
Drilling Company: New England Boring Contractors		Driller's Name: Garrett Peacock	Helper's Name: Matt Foden

Sample Number	Depth Range (Feet)	Blow Counts per 6 Inches / Coring Times Minute Per Foot	Recovery (inches)	Field Description	Strata Changes
				- Fourth Attempt: on joint, coring terminated @ 4'8" due to core barrel broken.	

Notes: *Moved AC-1 toward bridge railing from "10' from railing" to "8' from railing" due to road traffic.
Oxford PD: Jeffrey White #1893

Arrow-Board: - Signs: - Cones: 17

Protective Device Stand: - Box: -
Well Depth: - Solid Pipe: -
Stick Up Pipe: - Screen Pipe: -

Penetration Resistance (N) Guide:

Cohesionless Soils (Sands, Gravels)		Cohesive Soils (Silts, Clays)	
Relative Density	Penetration Resistance	Consistency	Penetration Resistance
Very Loose	0 - 4	Very Soft	0 - 2
Loose	4 - 10	Soft	2 - 4
Medium Dense	10 - 30	Medium Stiff	4 - 8
Dense	30 - 50	Stiff	8 - 15
Very Dense	Over 50	Very Stiff	15 - 30
N=Sum of Second and Third 6" Blow Counts		Hard	Over 30

Terms Used for Second Entry of Descriptions: and = 40-50%, some = 10-40%, trace = 10% or less

Type of Drill Rig: B53 truck
Hammer Weight: 140 lbs Fall: 30"
Casing Types: HW NW
Size: 4"
Depth: 3'
Sampler Type: S/S Size: 1 3/8" ID
Automatic Hammer Weight: 140 lbs
Safety Hammer Weight:
Donut Hammer Weight: Fall: 30"
Core Barrel Type: NX Size: 2.15" ID

CONCRETE CORING AC–1D

SCALE: 1/4" = 1'–0"

STA. 130+23.72 OFF. 14.26' L
N: 2894080.5
E: 548312.2

NOTES:

1. FOR BORING NOTES, SEE SHEET 3.

SEPT. 19, 2026	ISSUED FOR CONSTRUCTION
DATE	DESCRIPTION

THIS SHEET IS APPROVED FOR CONSTRUCTION BY MASSDOT
AUTHORIZED SIGNATORY: STATE BRIDGE ENGINEER
USE ONLY PRINTS OF LATEST DATE

605323_BR_03-08(O06030)(BORING_LOGS).DWG Plotted on 3-Sep-2026 7:12 AM
Final Structural Submittal (SF) 02-September-2026

massDOT Highway — Boring Log

LAMSON ENGINEERING CORPORATION
437 Cherry Street, Suite #109, Newton, Massachusetts 02465
Phone: (617) 558-0101 E-Mail: Klam@lamsonengineering.com

Boring No. AC-2 (Bridge Boring) — Page 1/1
Scale: 1" = 5'

City/Town: Oxford, MA	Bridge No.: O-06-030 (1D5)	Project File No.: 605323	Contract No.: -
Location: ST 56 (Leicester Road) over French River		Date & Time Started: **2/16/24 12:00 AM	Total Hours:
Groundwater Depth (Feet): N/A Date & Time: N/A		Date & Time Completed: **2/19/24 1:00 PM	7
Coordinates: N 2,894,136.8 E 548,348.1	Ground Elevation (Feet): 659.90'	Inspector's Name: James Gu	
Drilling Company: New England Boring Contractors		Driller's Name: Garrett Peacock	Helper's Name: Matt Foden

Sample Number	Depth Range (Feet)	Blow Counts per 6 Inches / Coring Times Minute Per Foot	Recovery (inches)	Field Description	Strata Changes
				Core through concrete abutment top 0' to 3', put 4" casing down to 3"	
C-1	3' - 7'	5 4.5 4.5 4	48"	Hard, Sound, CONCRETE Recovery = 48"/ 48" = 100% RQD = 48"/ 48" = 100%	
C-2	7' - 12'	4.5 3.5 4 3.5 4	60"	Hard, Sound, CONCRETE Recovery = 60"/ 60" = 100% RQD = 60"/ 60" = 100%	
C-3	12' - 17'	4 4 4 4 4	60"	Hard, Sound, CONCRETE Recovery = 60"/ 60" = 100% RQD = 60"/ 60" = 100%	
C-4	17' - 20'6"	3 2.5 3 1/ 6"	42"	Hard, Sound, CONCRETE + Last 3" BOULDER Recovery = 42"/ 42" = 100% RQD = 39"/ 42" = 93% Bottom of Abutment @ 20'3"	
S-1	20'6" - 22'6"	9 11 12 24	10"	3" BOULDER at the end of C-4	20'3"
				Wet, medium dense, dark gray, FINE TO COARSE GRAVEL AND SAND, some clay, trace inorganic silt.	22'6"
				Bottom of Exploration @ 22'6"	

Notes: * Moved AC-2 toward bridge railing due to road traffic @ 8.5' from railing.
**2/16/24 12:00 AM to 2:00 PM, 2/19/24 8:00 AM to 1:00 PM
Oxford PD: 2/16/24 Jeffrey White #1893, 2/19/24 Alexander Shuclis #1637

Arrow-Board: - Signs: - Cones: 17

Protective Device Stand: - Box: - Well Depth: - Solid Pipe: - Stick Up Pipe: - Screen Pipe: -

Type of Drill Rig: GT8 GtechDrill
Hammer Weight: 140 lbs Fall: 30"
Casing Types: HW
Size: 4"
Depth: 3'
Sampler Type: S/S Size: 1 ⅜" ID
Automatic Hammer Weight: 140 lbs
Safety Hammer Weight:
Donut Hammer Weight: Fall: 30"
Core Barrel Type: NX Size: 2.15" ID

Penetration Resistance (N) Guide:

Cohesionless Soils (Sands, Gravels)		Cohesive Soils (Silts, Clays)	
Relative Density	Penetration Resistance	Consistency	Penetration Resistance
Very Loose	0 - 4	Very Soft	0 - 2
Loose	4 - 10	Soft	2 - 4
Medium Dense	10 - 30	Medium Stiff	4 - 8
Dense	30 - 50	Stiff	8 - 15
Very Dense	Over 50	Very Stiff	15 - 30
N=Sum of Second and Third 6" Blow Counts		Hard	Over 30

Terms Used for Second Entry of Descriptions: and = 40-50%, some = 10-40%, trace = 10% or less

CONCRETE CORING AC–2

SCALE: ¼" = 1'–0"

STA. 130+85.62 OFF. 11.87' R
N: 2894136.8
E: 548348.1

NOTES:

1. FOR BORING NOTES, SEE SHEET 3.

SEPT. 19, 2026	ISSUED FOR CONSTRUCTION
DATE	DESCRIPTION

THIS SHEET IS APPROVED FOR CONSTRUCTION BY MASSDOT
AUTHORIZED SIGNATORY: STATE BRIDGE ENGINEER
USE ONLY PRINTS OF LATEST DATE

605323_BR_03-08(O06030)(BORING_LOGS).DWG Plotted on 3-Sep-2026 7:12 AM
02-September-2026 Final Structural Submittal (SF)

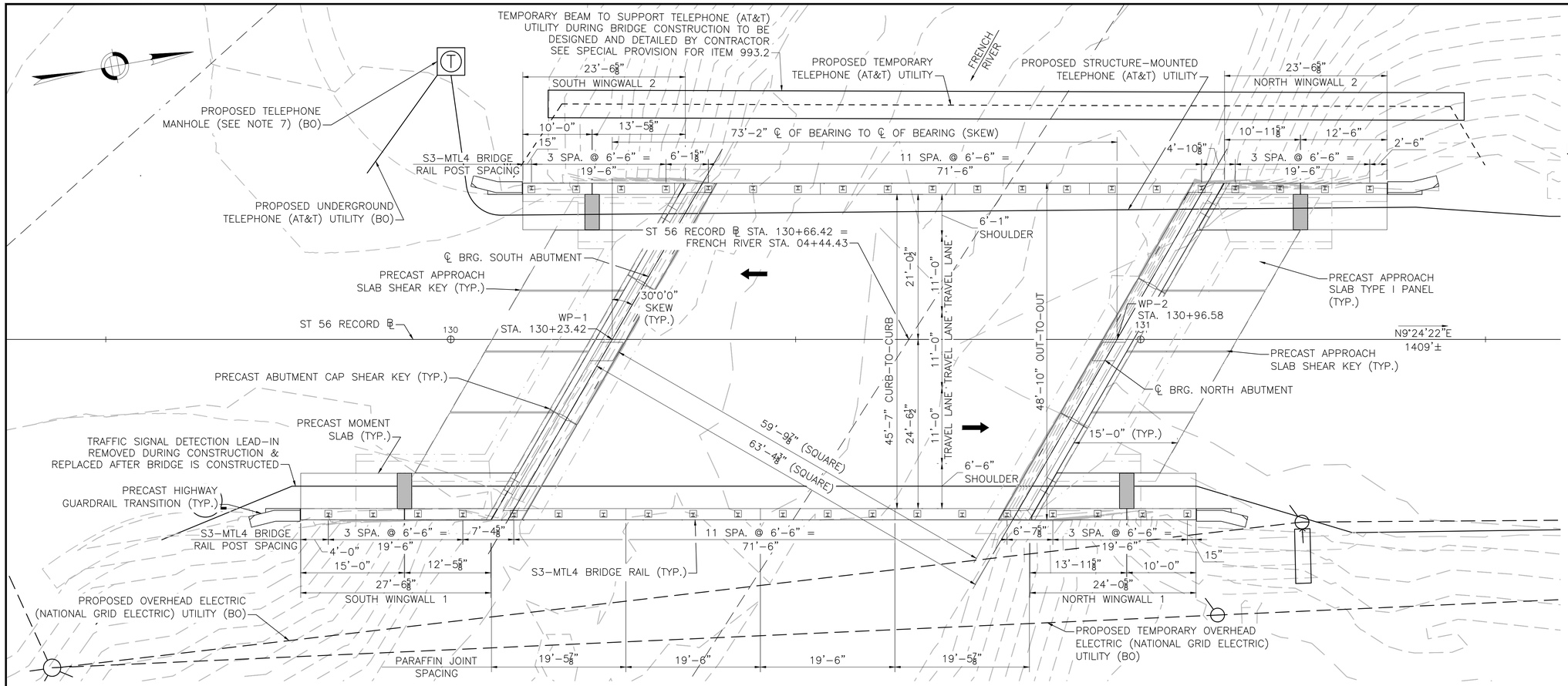

GENERAL PLAN

SCALE: ⅛" = 1'-0"

OXFORD
LEICESTER STREET/ST 56

STATE	FED. AID PROJ. NO.	SHEET NO.	TOTAL SHEETS
MA	HIP(NGB)-004S(015)X	34	66
PROJECT FILE NO.	605323		

PLAN & ELEVATION

NOTES:

1. FOR KEY PLAN, SEE SHEET 1.
2. FOR ABUTMENT DETAILS SEE SHEETS 13 THROUGH 16.
3. FOR APPROACH SLAB DETAILS SEE SHEET 19.
4. FOR TYPICAL SECTION SEE SHEET 21.
5. FOR S3-MTL4 BRIDGE RAILING DETAILS, SEE SHEETS 32 AND 33.
6. FOR PRECAST HIGHWAY GUARDRAIL TRANSITION DETAILS SEE SHEETS 34 AND 35.
7. TELEPHONE MANHOLE LOCATIONS WERE PROVIDED BY AT&T AND ARE CONCEPTUAL. FINAL LOCATIONS TO BE DETERMINED BY AT&T IN COORDINATION WITH THE ENGINEER.
8. BO = BY OTHERS

**NOTE:

EXISTING FOOTING ELEVATIONS TAKEN FROM 1964 RECORD PLANS AND HAVE NOT BEEN VERIFIED. ELEVATIONS HAVE BEEN ADJUSTED FROM THE 1929 NGVD DATUM USED FOR THE 1964 PROJECT AND CONVERTED TO THE 1988 NAVD DATUM USED FOR THIS PROJECT BY SUBTRACTING 0.65 FT FROM THE 1964 ELEVATIONS.

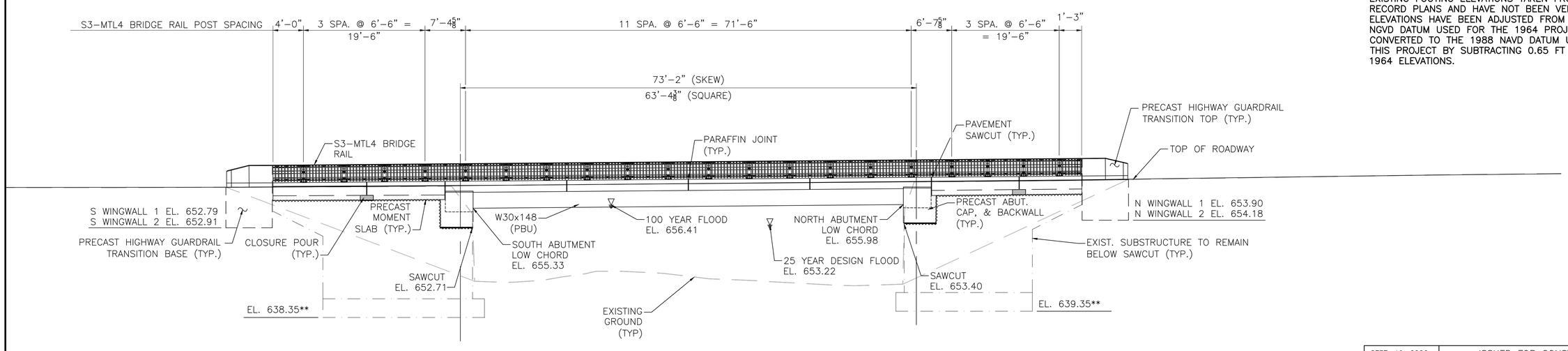

EAST ELEVATION

SCALE: ⅛" = 1'-0"

SEPT. 19, 2026	ISSUED FOR CONSTRUCTION
DATE	DESCRIPTION

THIS SHEET IS APPROVED FOR CONSTRUCTION BY MASSDOT
AUTHORIZED SIGNATORY: STATE BRIDGE ENGINEER
USE ONLY PRINTS OF LATEST DATE

605323_BR_09(O06030)(PLAN_ELEV).DWG Plotted on 3-Sep-2026 7:13 AM
02-September-2026
Final Structural Submittal (SF)

OXFORD
LEICESTER STREET/ST 56

STATE	FED. AID PROJ. NO.	SHEET NO.	TOTAL SHEETS
MA	HIP(NGB)-004S(015)X	35	66
PROJECT FILE NO.	605323		

SUBSTRUCTURE DEMOLITION

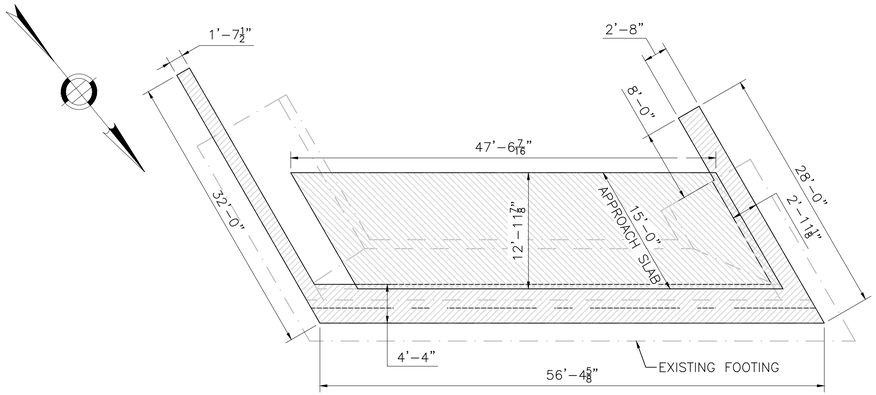

SOUTH ABUTMENT PLAN
SCALE: 1½" = 1'-0"

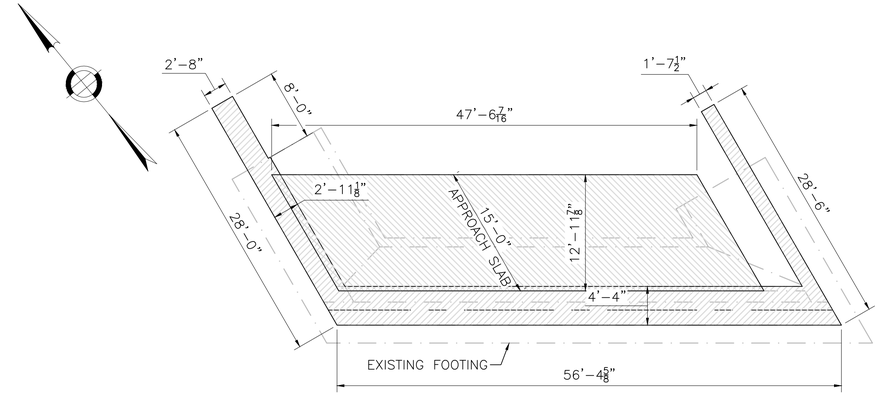

NORTH ABUTMENT PLAN
SCALE: 1½" = 1'-0"

**NOTE:

EXISTING FOOTING ELEVATIONS TAKEN FROM 1964 RECORD PLANS AND HAVE NOT BEEN VERIFIED. ELEVATIONS HAVE BEEN ADJUSTED FROM THE 1929 NGVD DATUM USED FOR THE 1964 PROJECT AND CONVERTED TO THE 1988 NAVD DATUM USED FOR THIS PROJECT BY SUBTRACTING 0.65 FT FROM THE 1964 ELEVATIONS.

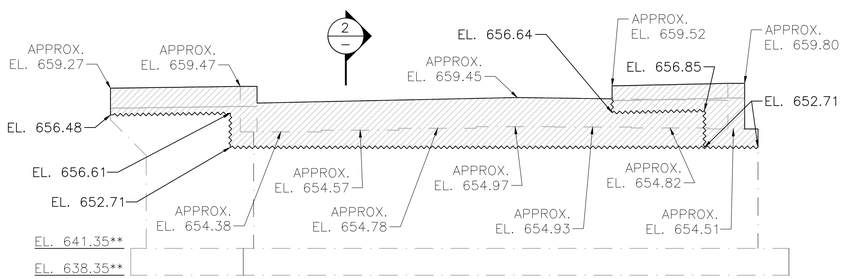

SOUTH ABUTMENT ELEVATION
SCALE: 1½" = 1'-0"

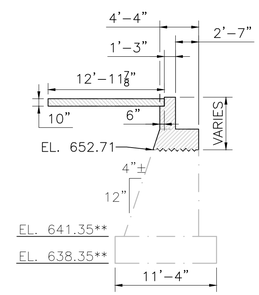

SECTION 2
SCALE: 1½" = 1'-0"

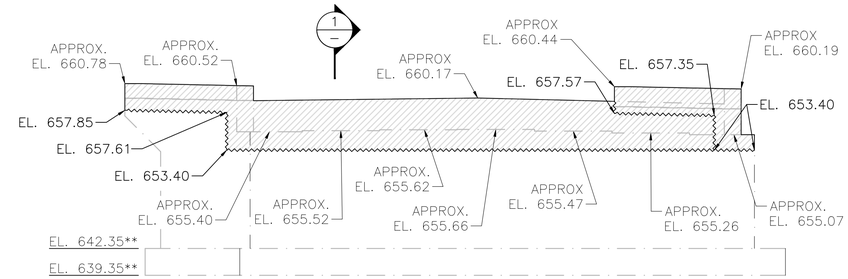

NORTH ABUTMENT ELEVATION
SCALE: 1½" = 1'-0"

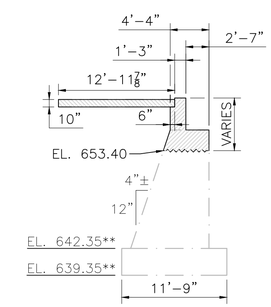

SECTION 1
SCALE: 1½" = 1'-0"

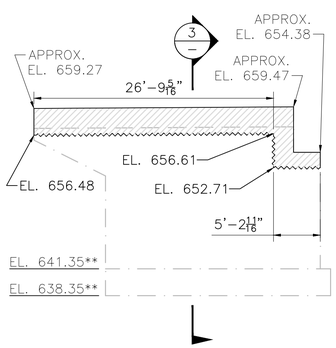

SOUTH WINGWALL 1 ELEVATION
SCALE: 1½" = 1'-0"

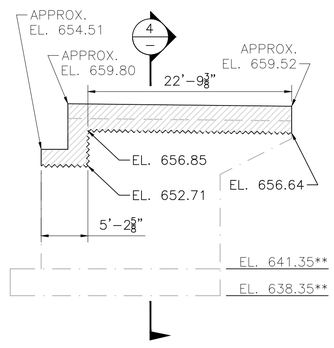

SOUTH WINGWALL 2 ELEVATION
SCALE: 1½" = 1'-0"

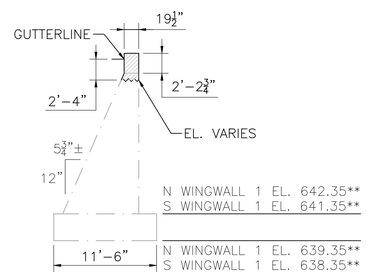

SECTION 3
SCALE: 1½" = 1'-0"

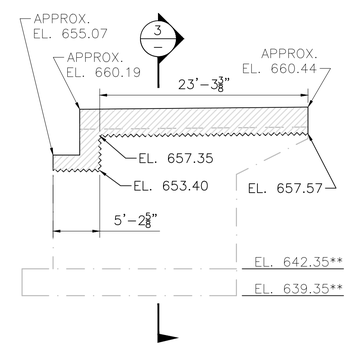

NORTH WINGWALL 1 ELEVATION
SCALE: 1½" = 1'-0"

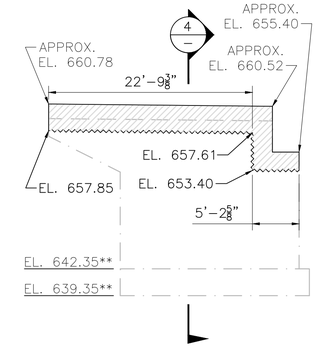

NORTH WINGWALL 2 ELEVATION
SCALE: 1½" = 1'-0"

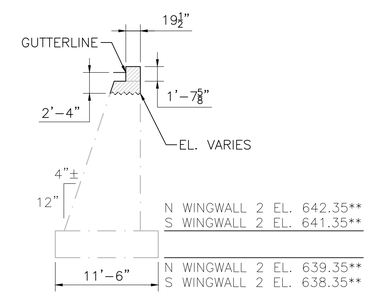

SECTION 4
SCALE: 1½" = 1'-0"

LEGEND:

PORTION OF ABUTMENT TO BE REMOVED

PORTION OF APPROACH SLAB TO BE REMOVED

SEPT. 19, 2026	ISSUED FOR CONSTRUCTION
DATE	DESCRIPTION

THIS SHEET IS APPROVED FOR CONSTRUCTION BY MASSDOT
AUTHORIZED SIGNATORY: STATE BRIDGE ENGINEER
USE ONLY PRINTS OF LATEST DATE

605323_BR_10(O06030)(SUBSTR_DEMO).DWG Plotted on 3-Sep-2026 7:13 AM
02-September-2026
Final Structural Submittal (SF)

OXFORD
LEICESTER STREET/ST 56

STATE	FED. AID PROJ. NO.	SHEET NO.	TOTAL SHEETS
MA	HIP(NGB)-004S(015)X	36	66
PROJECT FILE NO.	605323		

SOUTH ABUTMENT PLAN & ELEVATION

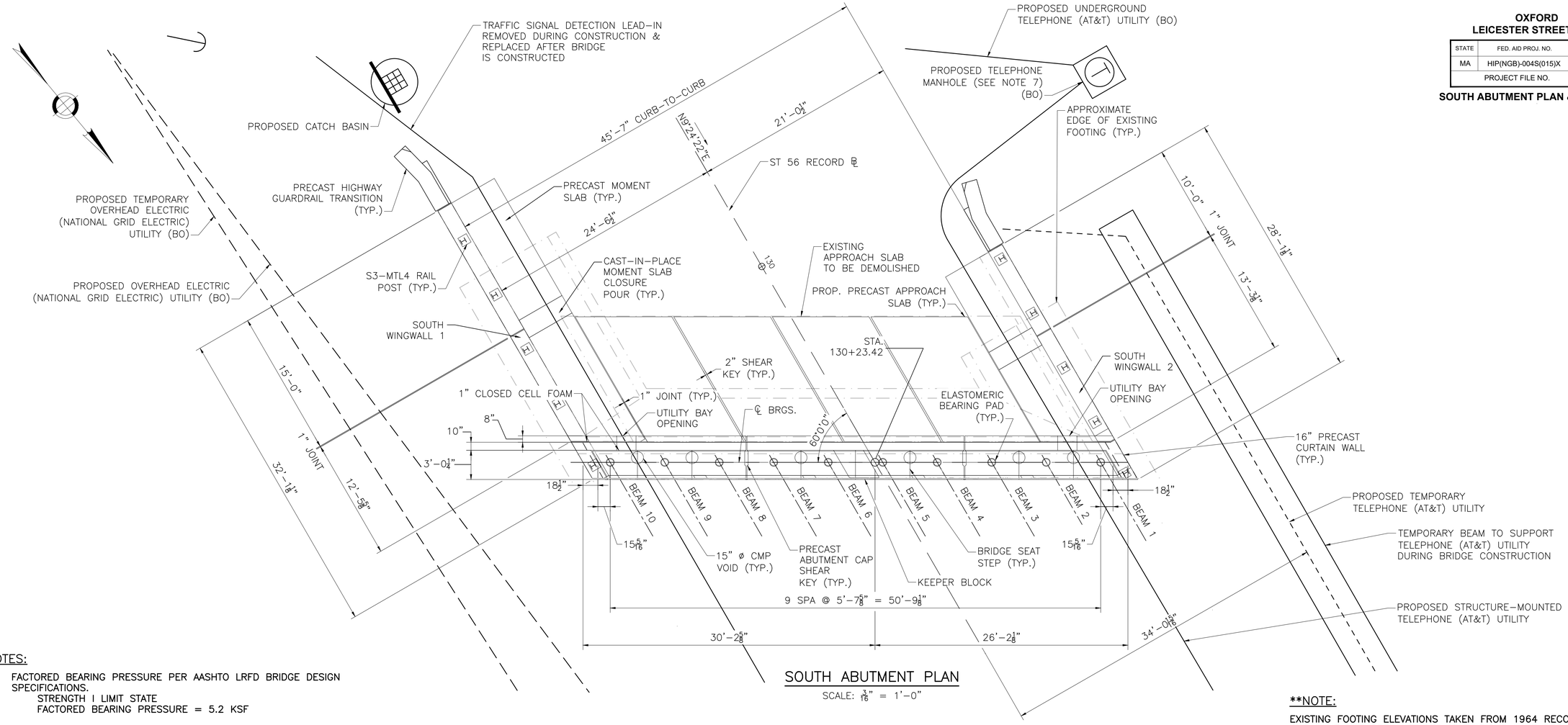

SOUTH ABUTMENT PLAN

SCALE: 3/16" = 1'-0"

NOTES:

1. FACTORED BEARING PRESSURE PER AASHTO LRFD BRIDGE DESIGN SPECIFICATIONS.
   STRENGTH I LIMIT STATE
   FACTORED BEARING PRESSURE = 5.2 KSF
2. FACTORED BEARING RESISTANCE = 7.2 KSF FOR THE STRENGTH LIMIT STATE AND IS THE PRODUCT OF THE NOMINAL BEARING RESISTANCE OF 16.2 KSF AND A RESISTANCE FACTOR OF 0.45.
3. FOR BRIDGE SEAT AND BACKWALL ELEVATIONS, SEE PRECAST ABUTMENT CAP DETAILS SHEET 13.
4. FOR BACKWALL AND CURTAIN WALL DETAILS, SEE SHEETS 14 AND 15.
5. FOR KEEPER BLOCK DETAILS, SEE SHEET 16.
6. FOR S3-MTL4 RAILING POST SPACING, SEE SHEET 32.
7. TELEPHONE MANHOLE LOCATIONS WERE PROVIDED BY AT&T AND ARE CONCEPTUAL. FINAL LOCATIONS TO BE DETERMINED BY AT&T IN COORDINATION WITH THE ENGINEER.
8. BO = BY OTHERS

**NOTE:

EXISTING FOOTING ELEVATIONS TAKEN FROM 1964 RECORD PLANS AND HAVE NOT BEEN VERIFIED. ELEVATIONS HAVE BEEN ADJUSTED FROM THE 1929 NGVD DATUM USED FOR THE 1964 PROJECT AND CONVERTED TO THE 1988 NAVD DATUM USED FOR THIS PROJECT BY SUBTRACTING 0.65 FT FROM THE 1964 ELEVATIONS.

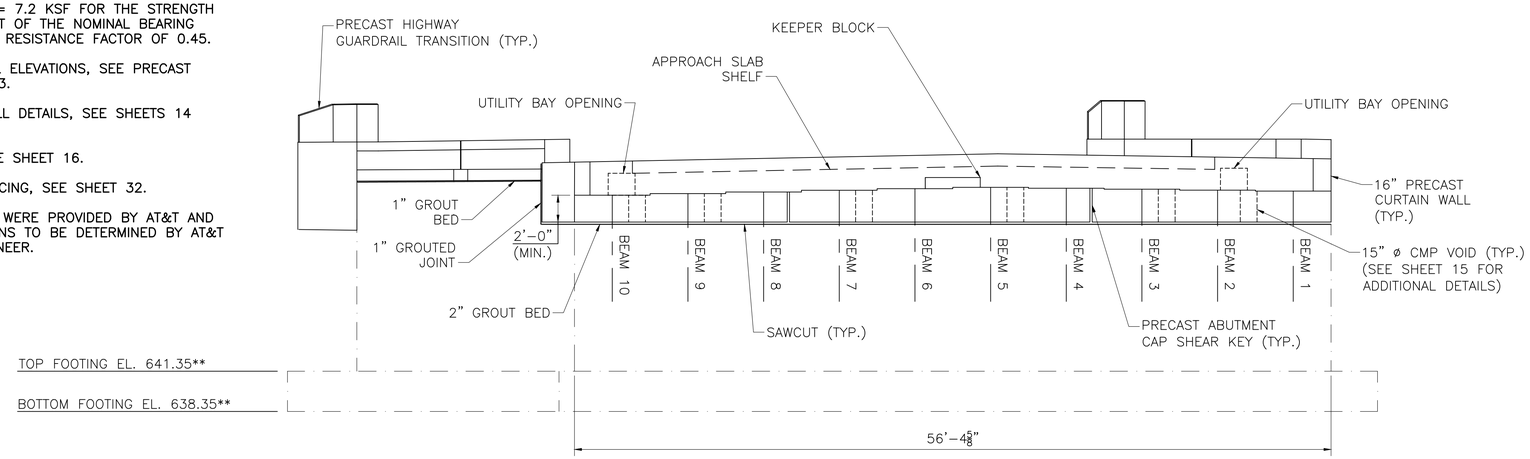

SOUTH ABUTMENT ELEVATION

SCALE: 3/16" = 1'-0"

DATE	DESCRIPTION
SEPT. 19, 2026	ISSUED FOR CONSTRUCTION

THIS SHEET IS APPROVED FOR CONSTRUCTION BY MASSDOT
AUTHORIZED SIGNATORY: STATE BRIDGE ENGINEER
USE ONLY PRINTS OF LATEST DATE

605323_BR_11(O06030)(S_ABUTMENT).DWG Plotted on 3-Sep-2026 7:14 AM
Final Structural Submittal (SF) 02-September-2026

OXFORD
LEICESTER STREET/ST 56

STATE	FED. AID PROJ. NO.	SHEET NO.	TOTAL SHEETS
MA	HIP(NGB)-004S(015)X	37	66
PROJECT FILE NO.	605323		

NORTH ABUTMENT PLAN & ELEVATION

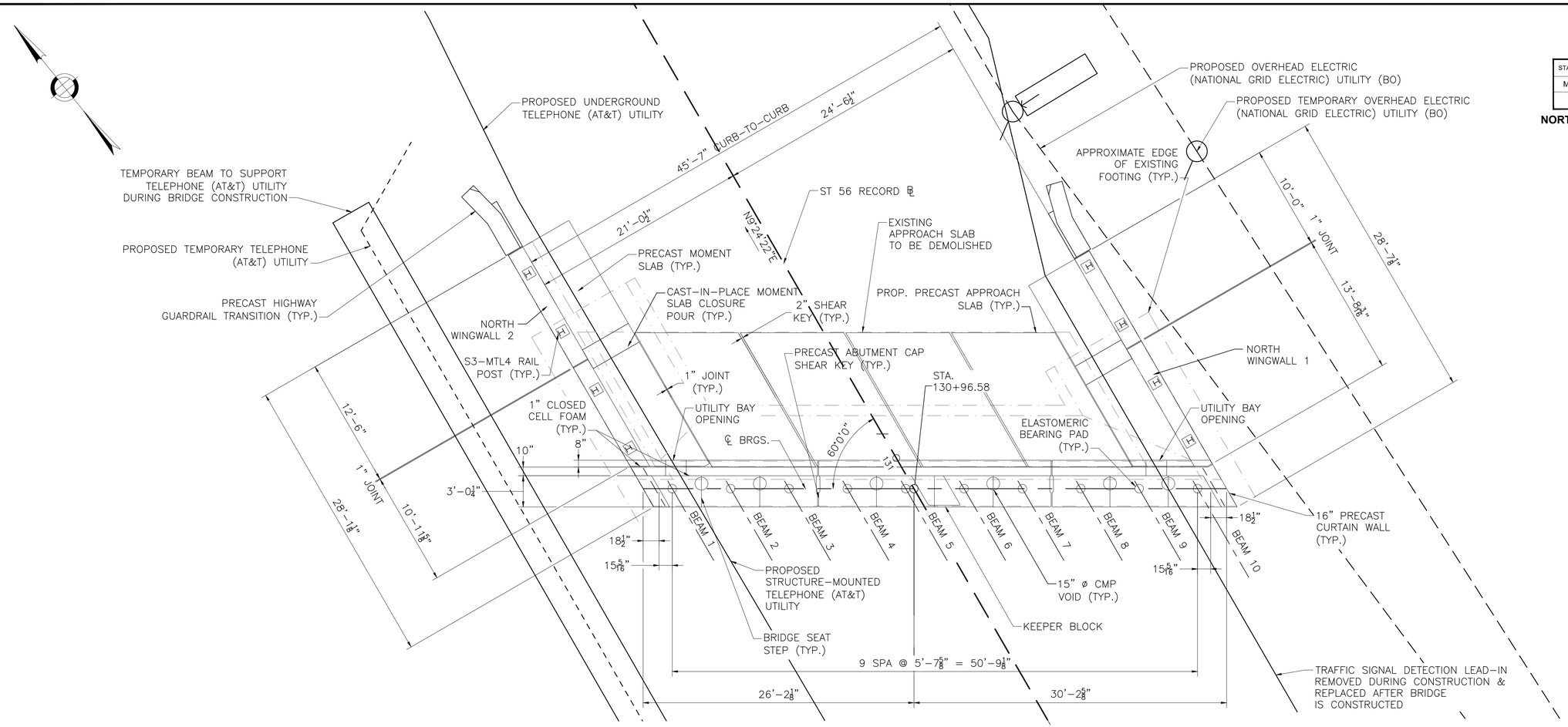

NORTH ABUTMENT PLAN

SCALE: 3/16" = 1'-0"

NOTES:

1. FACTORED BEARING PRESSURE PER AASHTO LRFD BRIDGE DESIGN SPECIFICATIONS.
   STRENGTH I LIMIT STATE
   FACTORED BEARING PRESSURE = 5.2 KSF
2. FACTORED BEARING RESISTANCE = 7.2 KSF FOR THE STRENGTH LIMIT STATE AND IS THE PRODUCT OF THE NOMINAL BEARING RESISTANCE OF 16.2 KSF AND A RESISTANCE FACTOR OF 0.45.
3. FOR BRIDGE SEAT AND BACKWALL ELEVATIONS, SEE PRECAST ABUTMENT CAP DETAILS SHEET 13.
4. FOR BACKWALL AND CURTAIN WALL DETAILS, SEE SHEETS 14 AND 15.
5. FOR KEEPER BLOCK DETAILS, SEE SHEET 16.
6. FOR S3-MTL4 RAILING POST SPACING, SEE SHEET 32.
7. BO = BY OTHERS

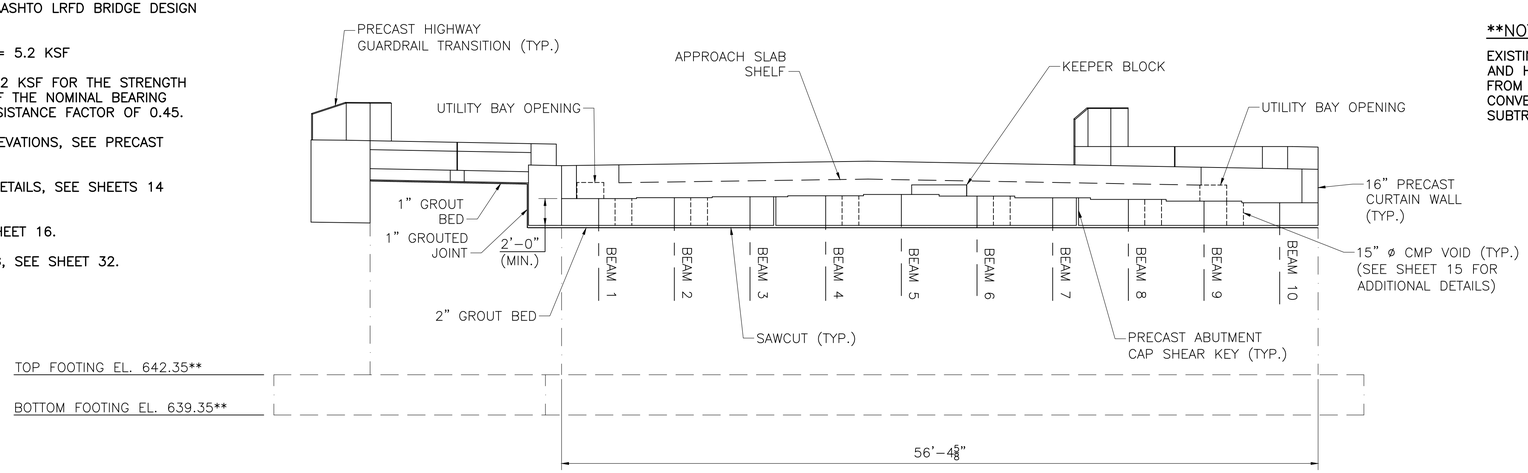

NORTH ABUTMENT ELEVATION

SCALE: 3/16" = 1'-0"

**NOTE:

EXISTING FOOTING ELEVATIONS TAKEN FROM 1964 RECORD PLANS AND HAVE NOT BEEN VERIFIED. ELEVATIONS HAVE BEEN ADJUSTED FROM THE 1929 NGVD DATUM USED FOR THE 1964 PROJECT AND CONVERTED TO THE 1988 NAVD DATUM USED FOR THIS PROJECT BY SUBTRACTING 0.65 FT FROM THE 1964 ELEVATIONS.

SEPT. 19, 2026	ISSUED FOR CONSTRUCTION
DATE	DESCRIPTION
THIS SHEET IS APPROVED FOR CONSTRUCTION BY MASSDOT AUTHORIZED SIGNATORY:	STATE BRIDGE ENGINEER
USE ONLY PRINTS OF LATEST DATE	

605323_BR_12(O06030)N_ABUTMENT).DWG Plotted on 3-Sep-2026 7:14 AM
02-September-2026
Final Structural Submittal (SF)

OXFORD
LEICESTER STREET/ST 56

STATE	FED. AID PROJ. NO.	SHEET NO.	TOTAL SHEETS
MA	HIP(NGB)-004S(015)X	38	66
PROJECT FILE NO.	605323		

ABUTMENT DETAILS 1 OF 4

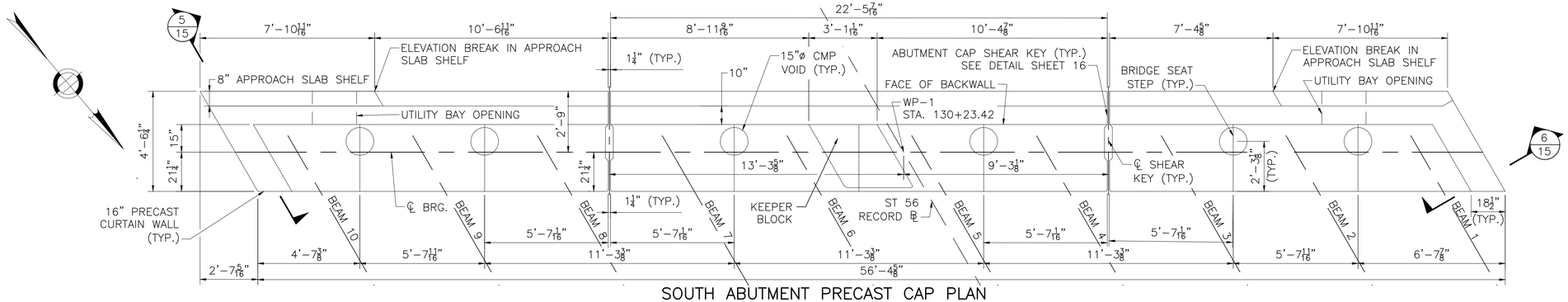

SOUTH ABUTMENT PRECAST CAP PLAN

SCALE: 3/8" = 1'-0"

NOTES:

1. SHEAR KEYS SHALL HAVE AN EXPOSED AGGREGATE FINISH AND SHALL BE CLEANED AND SURFACE SATURATED DRY PRIOR TO PLACING CLOSURE POUR CONCRETE.
2. FOR BACKWALL AND CURTAIN WALL DETAILS, SEE SHEETS 14 AND 15.
3. FOR KEEPER BLOCK DETAILS, SEE SHEET 16.
4. FOR UTILITY BAY OPENING DETAILS, SEE SHEET 15.

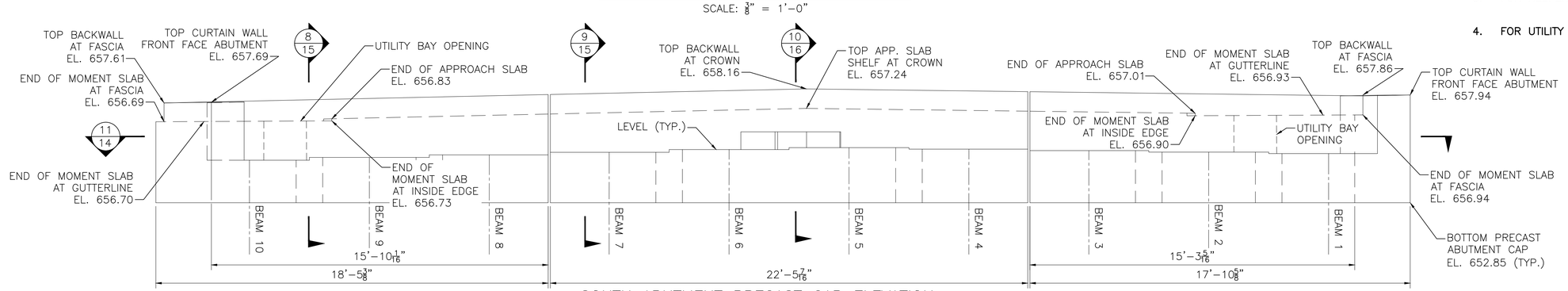

SOUTH ABUTMENT PRECAST CAP ELEVATION

SCALE: 3/8" = 1'-0"

NOTE:

ELEVATIONS ALONG APPROACH SLAB SHELF TAKEN AT INSIDE CORNER (END OF APPROACH SLAB).

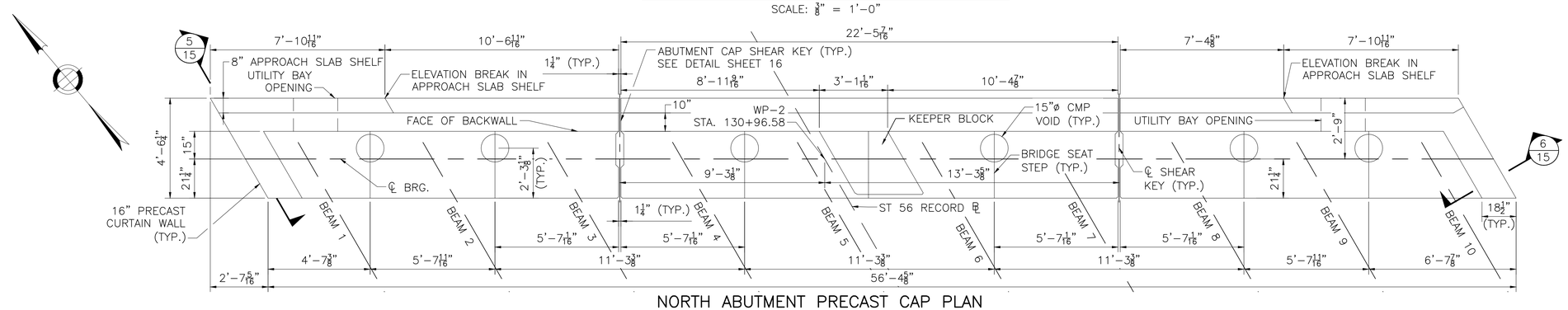

NORTH ABUTMENT PRECAST CAP PLAN

SCALE: 3/8" = 1'-0"

NOTE:

ELEVATIONS ALONG APPROACH SLAB SHELF TAKEN AT INSIDE CORNER (END OF APPROACH SLAB).

BRIDGE SEAT ELEVATIONS		
BEAM NUMBER	NORTH ABUTMENT	SOUTH ABUTMENT
1	655.77	655.08
2	655.85	655.15
3	655.92	655.22
4	655.99	655.29
5	656.06	655.37
6	656.04	655.35
7	655.92	655.22
8	655.79	655.10
9	655.67	654.98
10	655.54	654.85

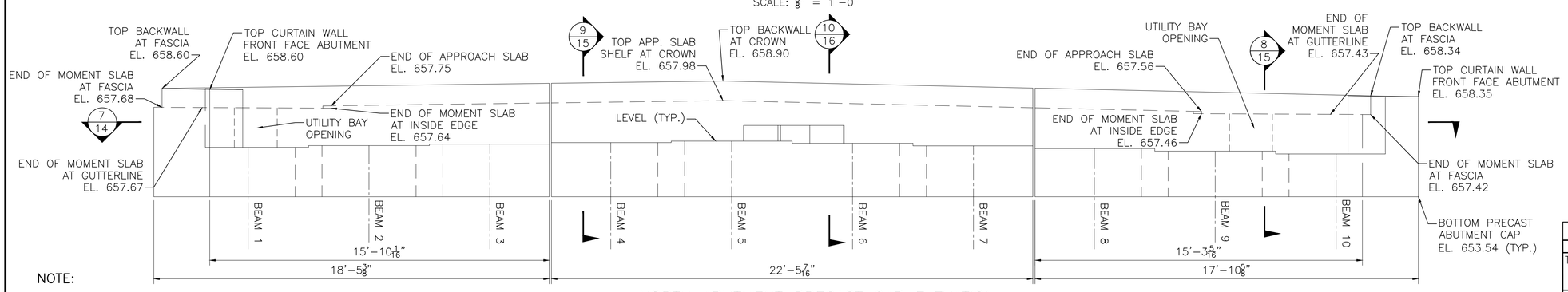

NORTH ABUTMENT PRECAST CAP ELEVATION

SCALE: 3/8" = 1'-0"

SEPT. 19, 2026	ISSUED FOR CONSTRUCTION
DATE	DESCRIPTION

THIS SHEET IS APPROVED FOR CONSTRUCTION BY MASSDOT AUTHORIZED SIGNATORY: STATE BRIDGE ENGINEER

USE ONLY PRINTS OF LATEST DATE

605323_BR_13-16(006030)(ABUTMENT_DET).DWG Plotted on 3-Sep-2026 7:14 AM
Final Structural Submittal (SF) 02-September-2026

OXFORD
LEICESTER STREET/ST 56

STATE	FED. AID PROJ. NO.	SHEET NO.	TOTAL SHEETS
MA	HIP(NGB)-004S(015)X	39	66
PROJECT FILE NO.	605323		

ABUTMENT DETAILS 2 OF 4

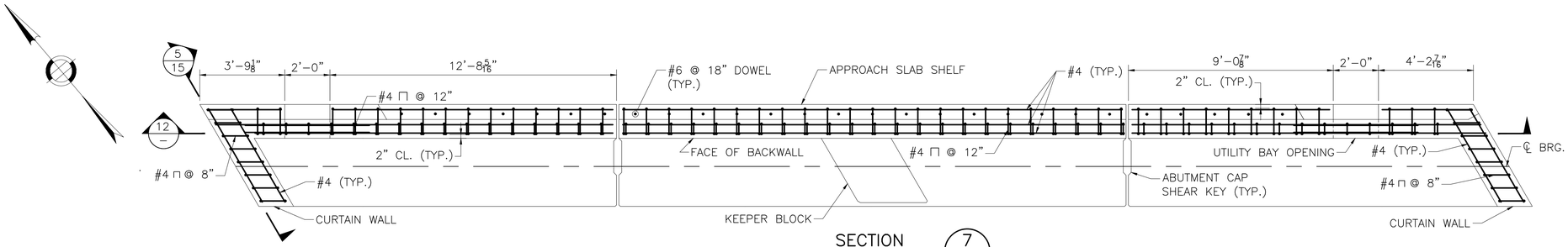

SECTION 7/13
SCALE: 3/8" = 1'-0"

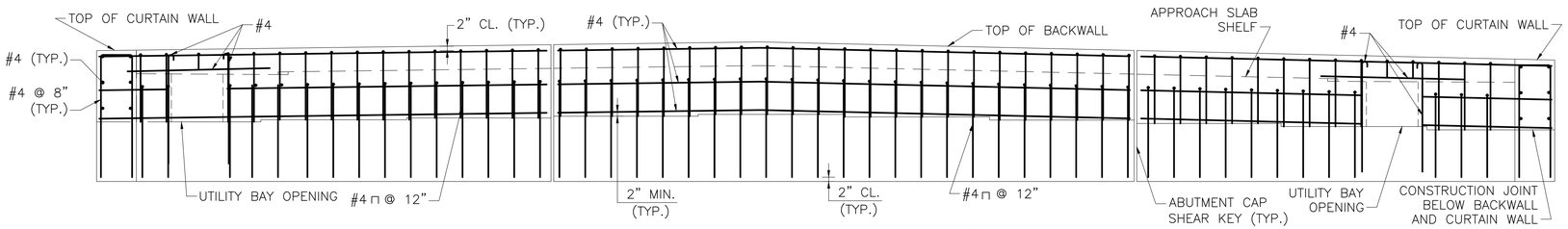

SECTION 12/–
SCALE: 3/8" = 1'-0"

NORTH ABUTMENT BACKWALL DETAILS

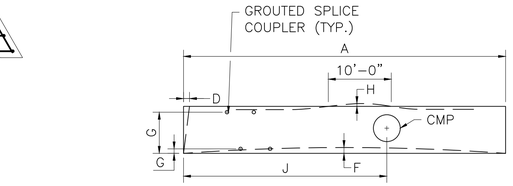

PLAN
NOT TO SCALE

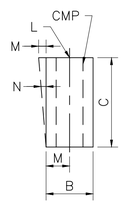

SECTION
NOT TO SCALE

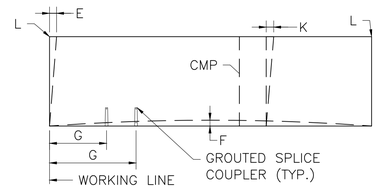

ELEVATION
NOT TO SCALE

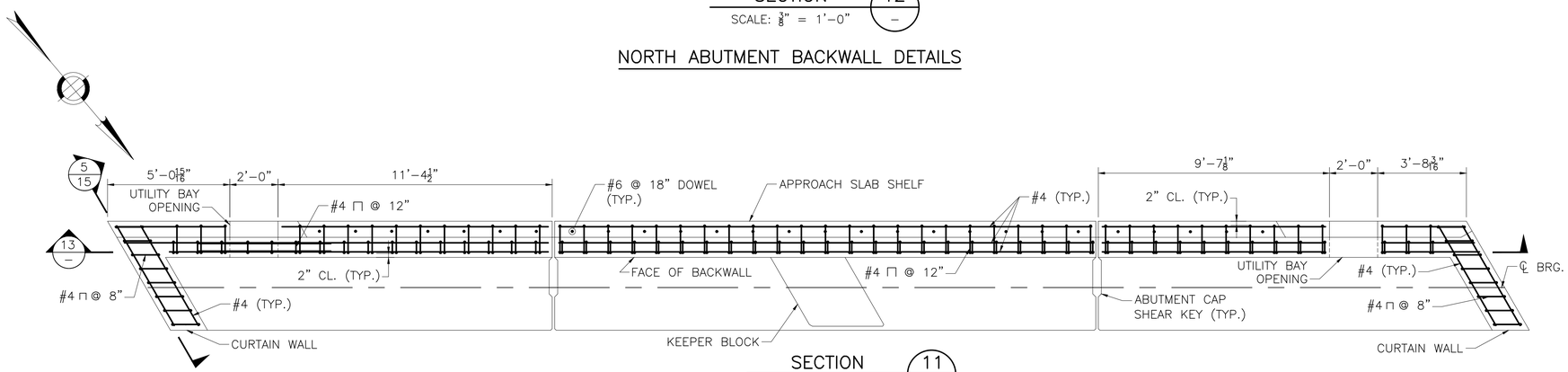

SECTION 11/13
SCALE: 3/8" = 1'-0"

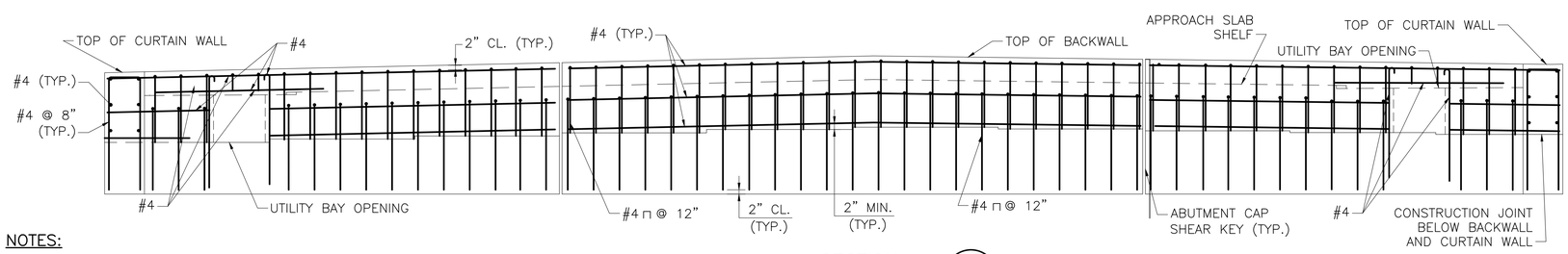

SECTION 13/–
SCALE: 3/8" = 1'-0"

SOUTH ABUTMENT BACKWALL DETAILS

WALL ELEMENTS ERECTION TOLERANCES

L	ACTUAL ELEVATION FROM SPECIFIED ELEVATION MAXIMUM LOW MAXIMUM HIGH	 1/2" 1/4"
M	MAXIMUM PLUMB VARIATION OVER HEIGHT OF PANEL	1/2"
N	PLUMB IN ANY 10 FEET OF PANEL HEIGHT	1/4"

WALL ELEMENTS FABRICATION TOLERANCES

A	LENGTH (OVERALL)	±1/4"
B	WIDTH (OVERALL)	±1/4"
C	DEPTH (OVERALL)	±1/4"
D	VARIATION FROM SPECIFIED PLAN END SQUARENESS OR SKEW	±3/8" PER 12 INCH WIDTH ±1/2" MAXIMUM
E	VARIATION FROM SPECIFIED ELEVATION END SQUARENESS OR SKEW	±1/8" PER 12 INCH WIDTH ±1/2" MAXIMUM
F	SWEEP OVER MEMBER LENGTH	±3/8"
G	LOCATION OF GROUTED SPLICE COUPLER MEASURED FROM A WORKING LINE	±1/4"
H	LOCAL SMOOTHNESS OF ANY SURFACE	±1/4" IN 10 FEET
J	LOCATION OF BLOCKOUT FOR PILES OR VOIDS	±1"
K	MAXIMUM PLUMB VARIATION OVER HEIGHT OF CMP VOID	±1/2"

NOTES:

1. ALL REINFORCEMENT SHALL BE COATED.
2. THE CONSTRUCTION JOINT SHALL BE GIVEN A RAKE FINISH WITH A 1/4" MINIMUM AMPLITUDE.
3. THE TOP OF BACKWALL SHALL BE TROWELED SMOOTH PARALLEL TO THE PROFILE GRADE.
4. SHEAR KEYS SHALL HAVE AN EXPOSED AGGREGATE FINISH AND SHALL BE CLEANED AND SURFACE SATURATED DRY PRIOR TO PLACING CLOSURE POUR CONCRETE.
5. FOR UTILITY BAY OPENING DETAILS, SEE SHEET 15
6. FOR PRECAST ABUTMENT SHEAR KEY DETAILS, SEE SHEET 16.
7. FOR UTILITY BAY DETAILS, SEE SHEET 29.
8. FOR END DIAPHRAGM DETAILS, SEE SHEET 30.

SEPT. 19, 2026	ISSUED FOR CONSTRUCTION
DATE	DESCRIPTION

THIS SHEET IS APPROVED FOR CONSTRUCTION BY MASSDOT
AUTHORIZED SIGNATORY: STATE BRIDGE ENGINEER
USE ONLY PRINTS OF LATEST DATE

605323_BR_13-16(006030)(ABUTMENT_DET).DWG Plotted on 3-Sep-2026 7:14 AM
02-September-2026
Final Structural Submittal (SF)

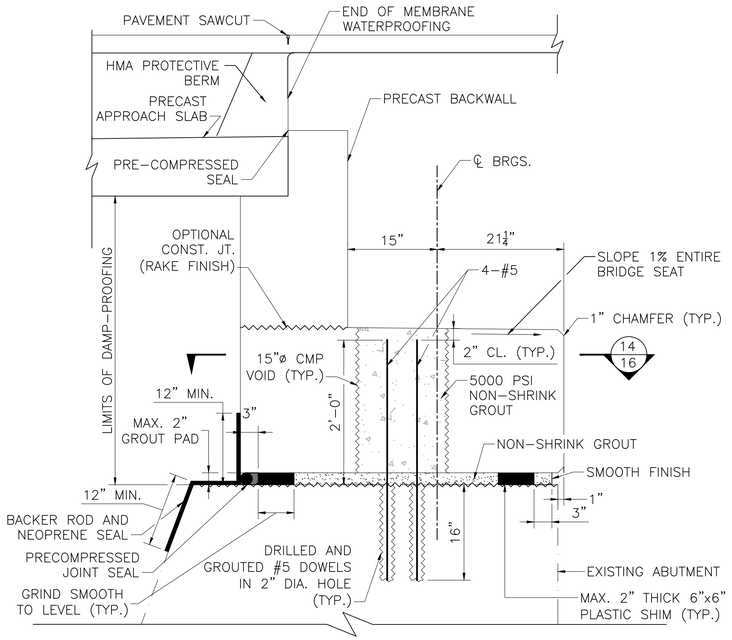

ABUTMENT CAP TYPICAL SECTION

SCALE: 1" = 1'-0"

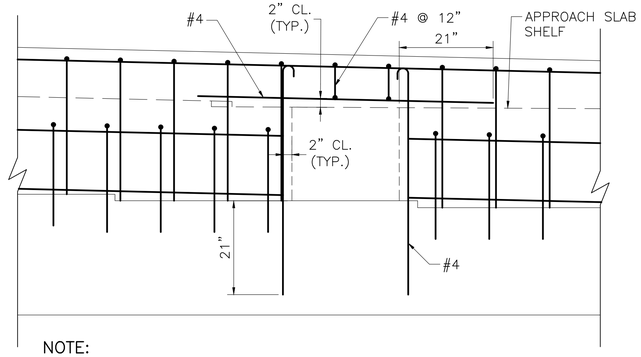

NOTE:

REINFORCEMENT SHOWN AT UTILITY BAY OPENING IN NORTH ABUTMENT CAP BACKWALL, SOUTH ABUTMENT CAP BACKWALL SIMILAR.

BACKWALL REINFORCEMENT AT UTILITY BAY

SCALE: ¾" = 1'-0"

OXFORD
LEICESTER STREET/ST 56

STATE	FED. AID PROJ. NO.	SHEET NO.	TOTAL SHEETS
MA	HIP(NGB)-004S(015)X	40	66
PROJECT FILE NO.	605323		

ABUTMENT DETAILS 3 OF 4

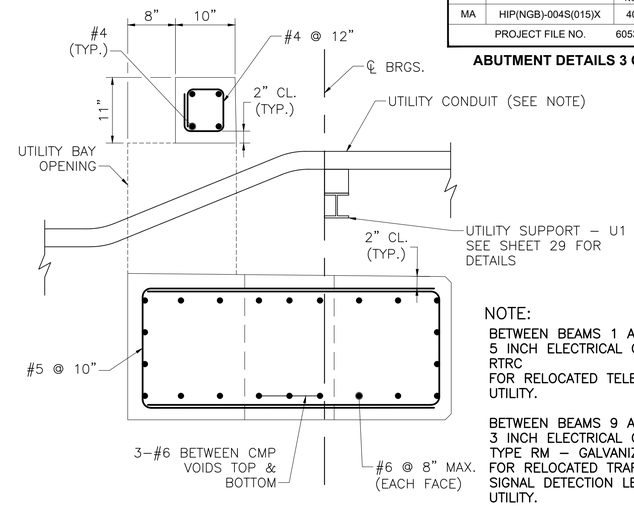

NOTE:

BETWEEN BEAMS 1 AND 2:
5 INCH ELECTRICAL CONDUIT – RTRC
FOR RELOCATED TELEPHONE UTILITY.

BETWEEN BEAMS 9 AND 10:
3 INCH ELECTRICAL CONDUIT TYPE RM – GALVANIZED STEEL
FOR RELOCATED TRAFFIC SIGNAL DETECTION LEAD-IN UTILITY.

SECTION 8/13

SCALE: 1" = 1'-0"

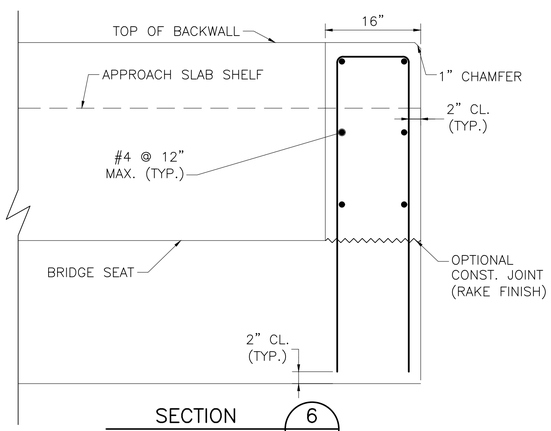

SECTION 6/13

SCALE: 1" = 1'-0"

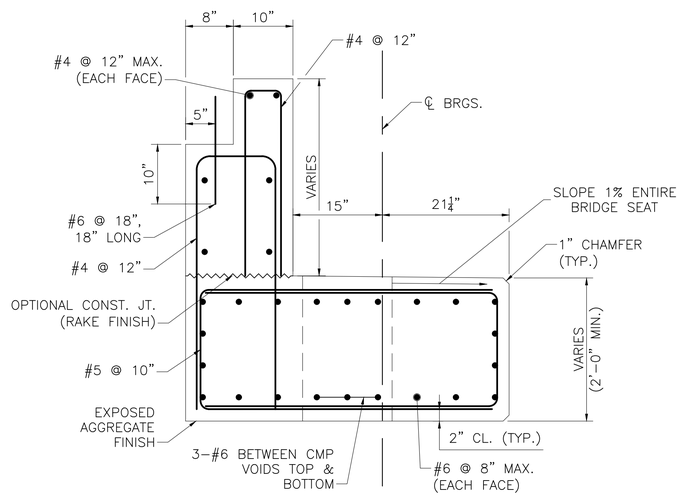

SECTION 9/13

SCALE: 1" = 1'-0"

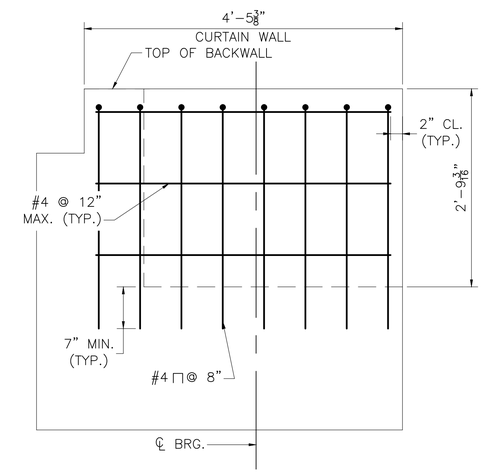

SECTION 5/13

SCALE: 1" = 1'-0"

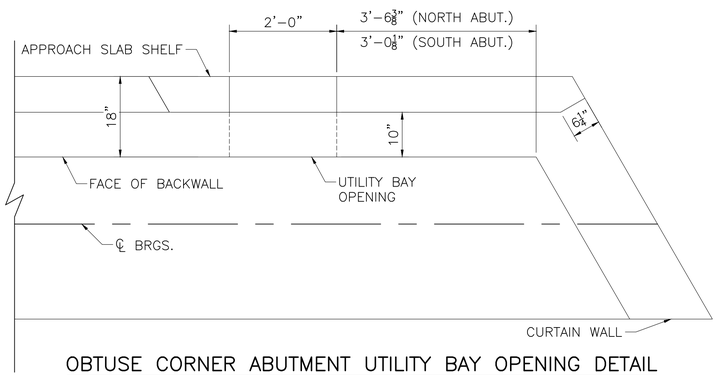

OBTUSE CORNER ABUTMENT UTILITY BAY OPENING DETAIL

SCALE: ¾" = 1'-0"

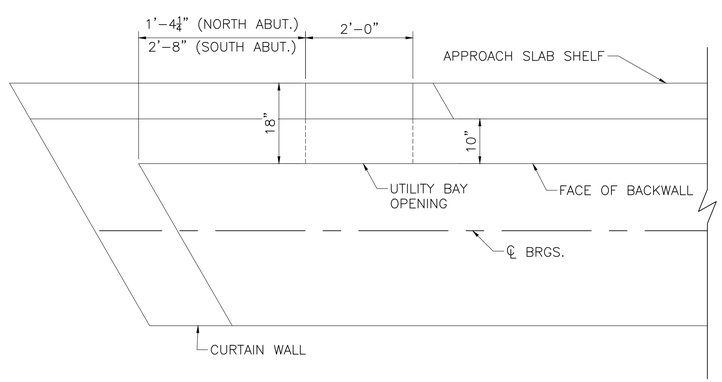

ACUTE CORNER ABUTMENT UTILITY BAY OPENING DETAIL

SCALE: ¾" = 1'-0"

DATE	DESCRIPTION
SEPT. 19, 2026	ISSUED FOR CONSTRUCTION

THIS SHEET IS APPROVED FOR CONSTRUCTION BY MASSDOT
AUTHORIZED SIGNATORY: STATE BRIDGE ENGINEER

USE ONLY PRINTS OF LATEST DATE

605323_BR_13-16(006030)(ABUTMENT_DET).DWG Plotted on 3-Sep-2026 7:15 AM
02-September-2026
Final Structural Submittal (SF)

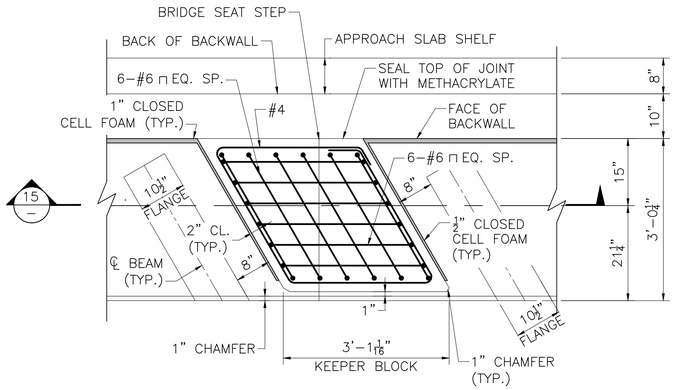

PLAN

SCALE: ¾" = 1'–0"

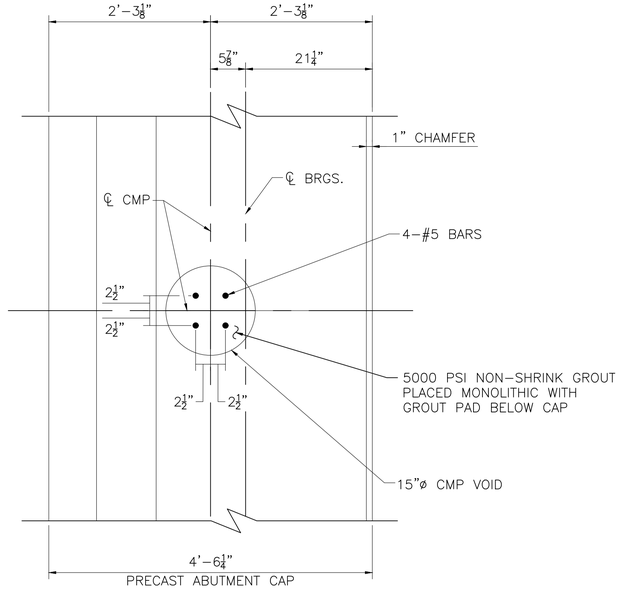

SECTION 14 / 15

SCALE: 1" = 1'–0"

NOTES:

1. ALL REINFORCEMENT SHALL BE COATED.
2. THE CONSTRUCTION JOINT SHALL BE GIVEN A RAKE FINISH WITH A ¼" MINIMUM AMPLITUDE.
3. THE TOP OF BACKWALL SHALL BE TROWELED SMOOTH PARALLEL TO THE PROFILE GRADE.
4. SHEAR KEYS SHALL HAVE AN EXPOSED AGGREGATE FINISH AND SHALL BE CLEANED AND SURFACE SATURATED DRY PRIOR TO PLACING CLOSURE POUR CONCRETE.
5. FOR END DIAPHRAGM DETAILS, SEE SHEET 30.

OXFORD
LEICESTER STREET/ST 56

STATE	FED. AID PROJ. NO.	SHEET NO.	TOTAL SHEETS
MA	HIP(NGB)-004S(015)X	41	66
PROJECT FILE NO.	605323		

ABUTMENT DETAILS 4 OF 4

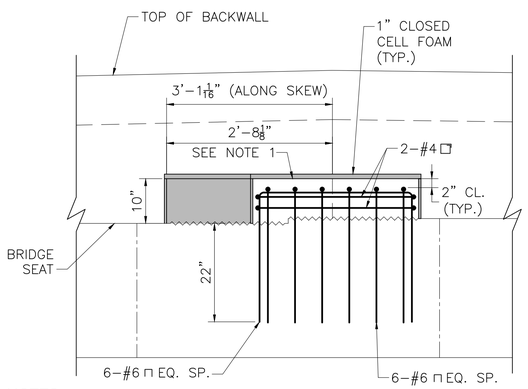

NOTES:

1. TOP OF PRECAST KEEPER BLOCK SHALL BE TROWELED SMOOTH PARALLEL TO PROFILE GRADE.
2. ABUTMENT REINFORCEMENT BELOW CONSTRUCTION JOINT HAS BEEN OMITTED FOR CLARITY.

SECTION 10 / 13

SCALE: ¾" = 1'–0"

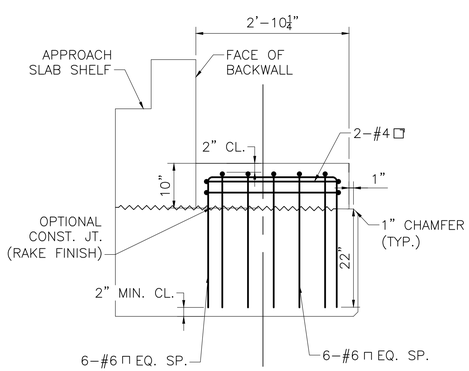

KEEPER BLOCK DETAILS

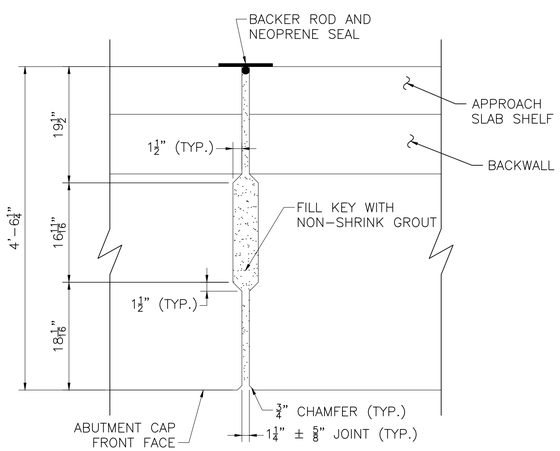

PRECAST ABUTMENT CAP SHEAR KEY DETAIL

SCALE: 1" = 1'–0"

NOTE:

REINFORCEMENT NOT SHOWN FOR CLARITY.

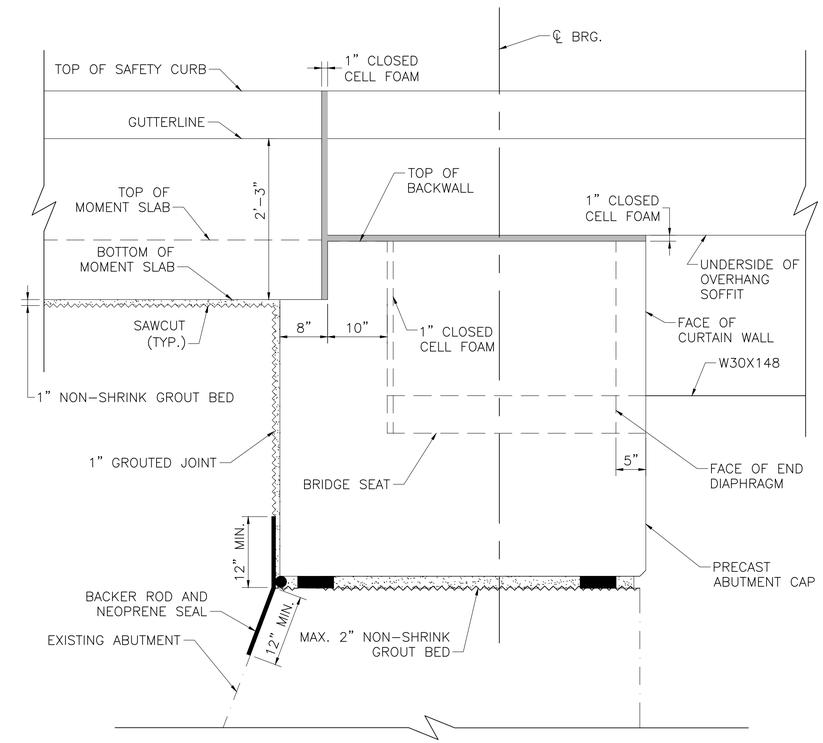

NOTE:

REINFORCEMENT NOT SHOWN FOR CLARITY.

CHEEKWALL AT EXTERIOR BARRIER – ELEVATION

SCALE: 1" = 1'–0"

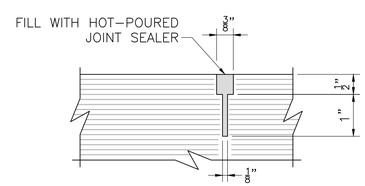

PAVEMENT SAWCUT DETAIL

NOT TO SCALE

SEPT. 19, 2026	ISSUED FOR CONSTRUCTION
DATE	DESCRIPTION
THIS SHEET IS APPROVED FOR CONSTRUCTION BY MASSDOT AUTHORIZED SIGNATORY:	STATE BRIDGE ENGINEER
USE ONLY PRINTS OF LATEST DATE	

605323_BR_13-16(006030)(ABUTMENT_DET).DWG Plotted on 3-Sep-2026 7:15 AM
02-September-2026
Final Structural Submittal (SF)

OXFORD
LEICESTER STREET/ST 56

STATE	FED. AID PROJ. NO.	SHEET NO.	TOTAL SHEETS
MA	HIP(NGB)-004S(015)X	42	66
PROJECT FILE NO.	605323		

WINGWALL DETAILS

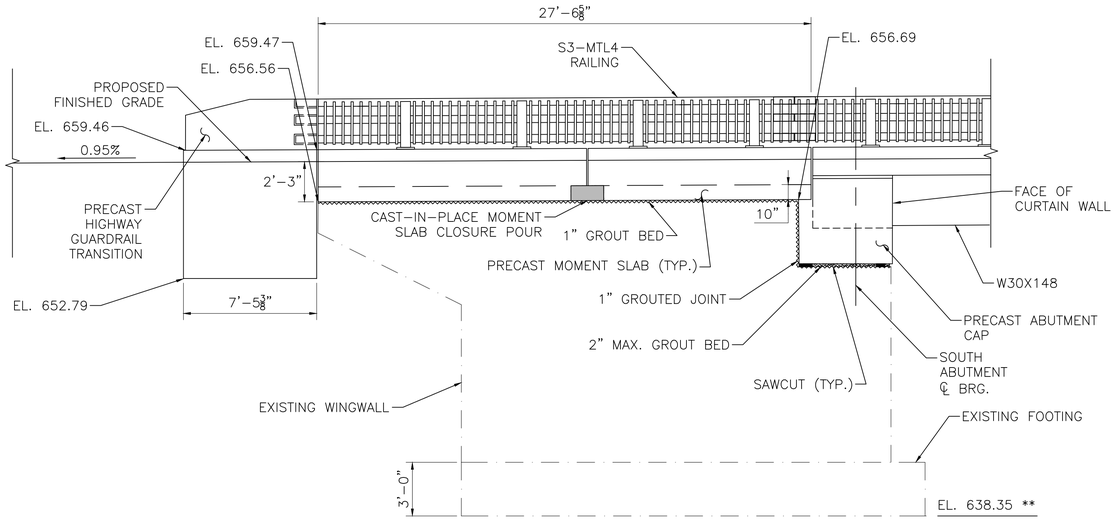

SOUTH WINGWALL 1 ELEVATION

SCALE: 1/4" = 1'-0"

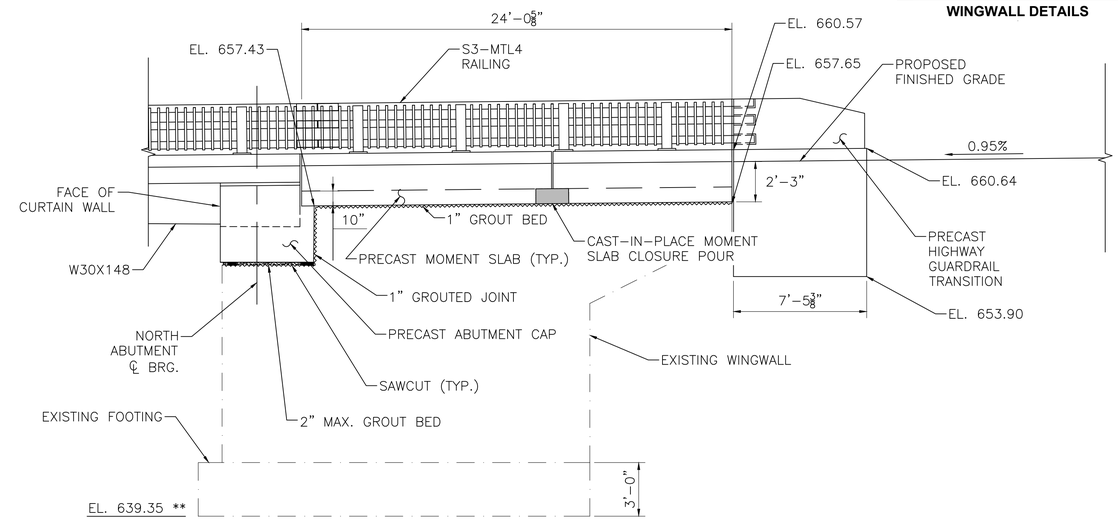

NORTH WINGWALL 1 ELEVATION

SCALE: 1/4" = 1'-0"

**NOTE:

EXISTING FOOTING ELEVATIONS TAKEN FROM 1964 RECORD PLANS AND HAVE NOT BEEN VERIFIED. ELEVATIONS HAVE BEEN ADJUSTED FROM THE 1929 NGVD DATUM USED FOR THE 1964 PROJECT AND CONVERTED TO THE 1988 NAVD DATUM USED FOR THIS PROJECT BY SUBTRACTING 0.65 FT FROM THE 1964 ELEVATIONS.

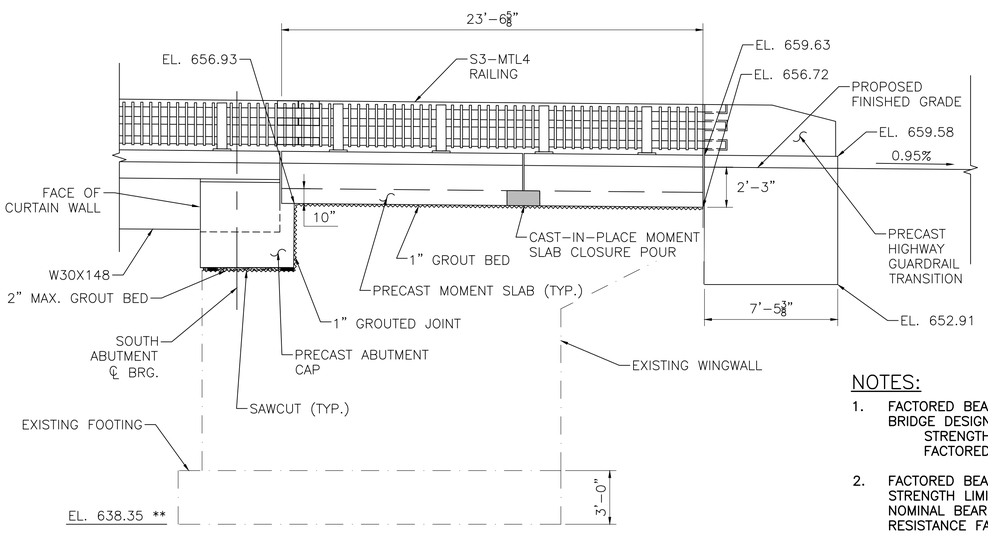

SOUTH WINGWALL 2 ELEVATION

SCALE: 1/4" = 1'-0"

NOTES:

1. FACTORED BEARING PRESSURE PER AASHTO LRFD BRIDGE DESIGN SPECIFICATIONS.
   STRENGTH I LIMIT STATE
   FACTORED BEARING PRESSURE = 3.2 KSF
2. FACTORED BEARING RESISTANCE = 8.6 KSF FOR THE STRENGTH LIMIT STATE AND IS THE PRODUCT OF THE NOMINAL BEARING RESISTANCE OF 15.7 KSF AND A RESISTANCE FACTOR OF 0.55.
3. FOR LIMITS OF WINGWALL DEMOLITION, SEE SHEET 10.
4. FOR PRECAST ABUTMENT CAP DETAILS, SEE SHEETS 13 THROUGH 16.
5. FOR MOMENT SLAB DETAILS, SEE SHEET 18.
6. FOR S3-MTL4 RAIL DETAILS, SEE SHEETS 32 AND 33.
7. FOR PRECAST HIGHWAY GUARDRAIL TRANSITION DETAILS, SEE SHEETS 34 AND 35.

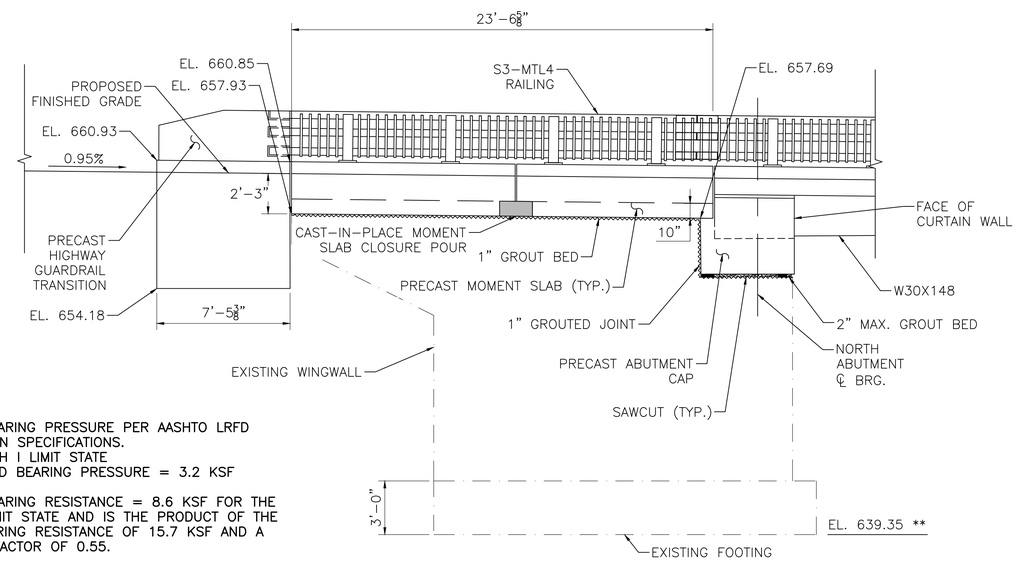

NORTH WINGWALL 2 ELEVATION

SCALE: 1/4" = 1'-0"

SEPT. 19, 2026	ISSUED FOR CONSTRUCTION
DATE	DESCRIPTION
THIS SHEET IS APPROVED FOR CONSTRUCTION BY MASSDOT AUTHORIZED SIGNATORY:	STATE BRIDGE ENGINEER
USE ONLY PRINTS OF LATEST DATE	

605323_BR_17(O06030)(WINGWALL_DET).DWG Plotted on 3-Sep-2026 7:15 AM
02-September-2026
Final Structural Submittal (SF)

OXFORD
LEICESTER STREET/ST 56

STATE	FED. AID PROJ. NO.	SHEET NO.	TOTAL SHEETS
MA	HIP(NGB)-004S(015)X	43	66
PROJECT FILE NO.	605323		

MOMENT SLAB DETAILS

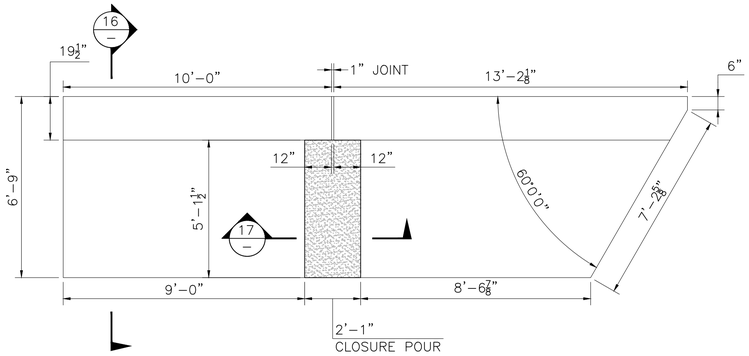

SOUTH WINGWALL 2
MOMENT SLAB PLAN
SCALE: ⅜" = 1'-0"

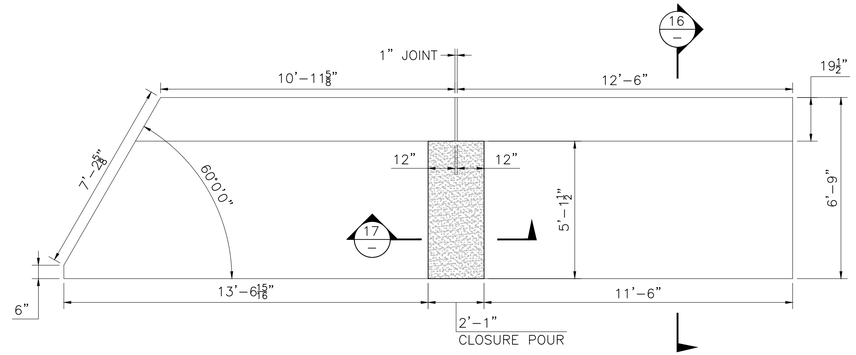

NORTH WINGWALL 2
MOMENT SLAB PLAN
SCALE: ⅜" = 1'-0"

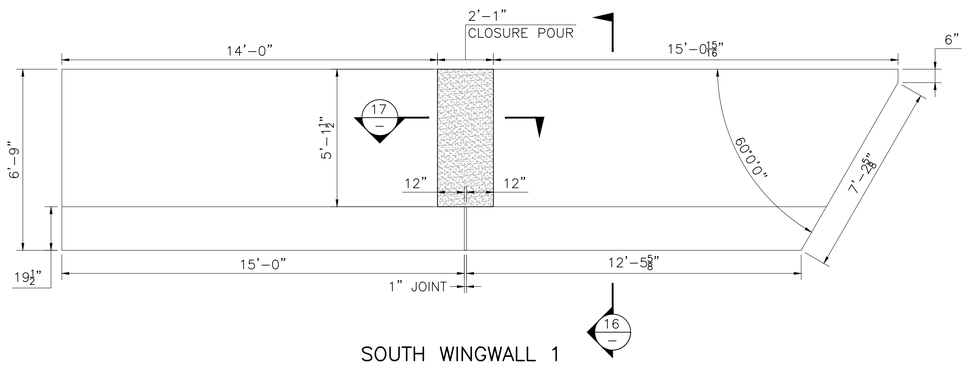

SOUTH WINGWALL 1
MOMENT SLAB PLAN
SCALE: ⅜" = 1'-0"

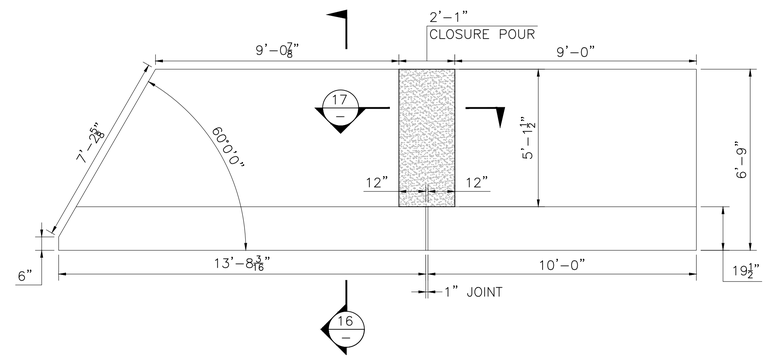

NORTH WINGWALL 1
MOMENT SLAB PLAN
SCALE: ⅜" = 1'-0"

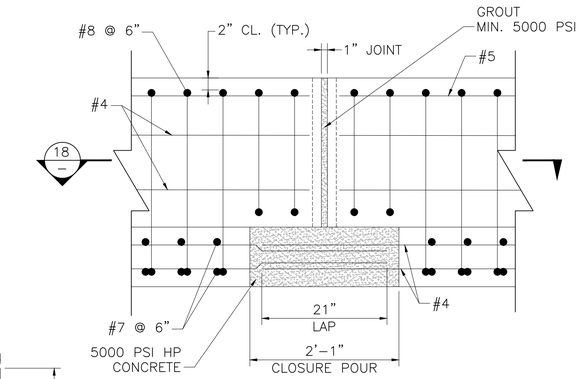

SECTION 17
SCALE: 1" = 1'-0"

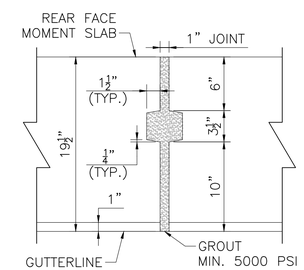

SECTION 18
SCALE: 1½" = 1'-0"

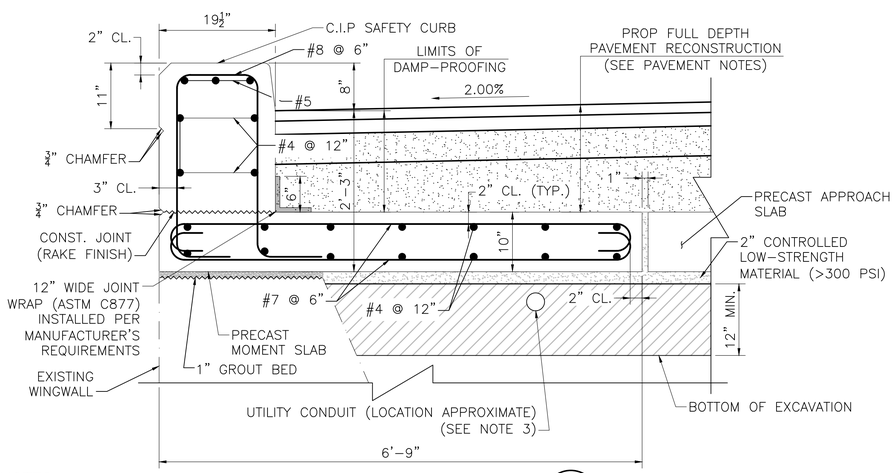

SECTION 16
SCALE: 1" = 1'-0"

NOTES:

1. FOR BOTTOM OF MOMENT SLAB ELEVATIONS, SEE WINGWALL DETAILS, SHEET 17.
2. FOR S3-MTL4 RAILING DETAILS, SEE SHEETS 32 AND 33.
3. CONDUIT FOR RELOCATED TELEPHONE UTILITY LOCATED UNDER SOUTH WINGWALL MOMENT SLAB 2 AND NORTH WINGWALL MOMENT SLAB 2. CONDUIT FOR RELOCATED TRAFFIC SIGNAL DETECTION LEAD-IN UTILITY LOCATED UNDER SOUTH WINGWALL 1 MOMENT SLAB 1 AND NORTH WINGWALL 1 MOMENT SLAB.

PAVEMENT NOTES:

1.75" SUPERPAVE SURFACE COURSE-12.5 POLYMER (SSC-12.5P) OVER ASPHALT EMULSION FOR TACK COAT OVER
2.25" SUPERPAVE INTERMEDIATE COURSE-19.0 (SIC-19.0) OVER ASPHALT EMULSION FOR TACK COAT OVER
5.00" SUPERPAVE BASE COURSE-37.5 (SBC-37.5) OVER
4.00" DENSE GRADED CRUSHED STONE FOR SUBBASE OVER
4.00" MIN. GRAVEL BORROW (TYPE D)

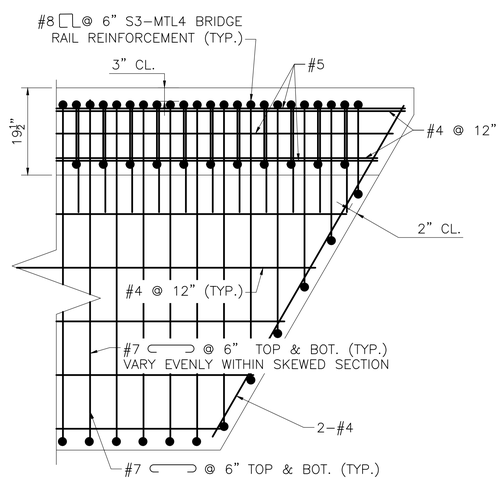

SOUTH WINGWALL 2 MOMENT
SLAB ACUTE CORNER
SCALE: ¾" = 1'-0"

NOTE: NORTH WINGWALL 1 SIMILAR

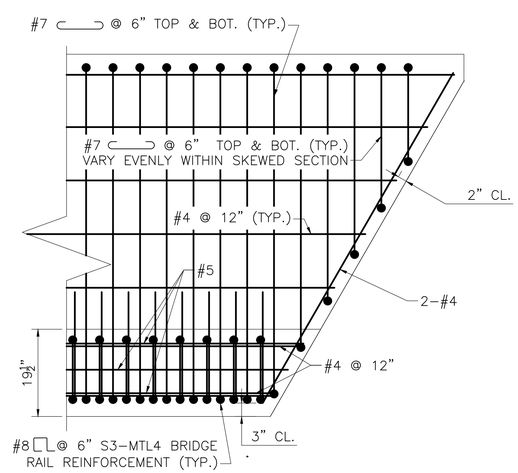

SOUTH WINGWALL 1 MOMENT
SLAB ACUTE CORNER
SCALE: ¾" = 1'-0"

NOTE: NORTH WINGWALL 2 SIMILAR

SEPT. 19, 2026	ISSUED FOR CONSTRUCTION
DATE	DESCRIPTION
THIS SHEET IS APPROVED FOR CONSTRUCTION BY MASSDOT AUTHORIZED SIGNATORY:	STATE BRIDGE ENGINEER
USE ONLY PRINTS OF LATEST DATE	

605323_BR_18(O06030)(MOM_SLAB_DET).DWG Plotted on 3-Sep-2026 7:15 AM
02-September-2026
Final Structural Submittal (SF)

OXFORD
LEICESTER STREET/ST 56

STATE	FED. AID PROJ. NO.	SHEET NO.	TOTAL SHEETS
MA	HIP(NGB)-004S(015)X	44	66
PROJECT FILE NO.	605323		

APPROACH SLAB DETAILS

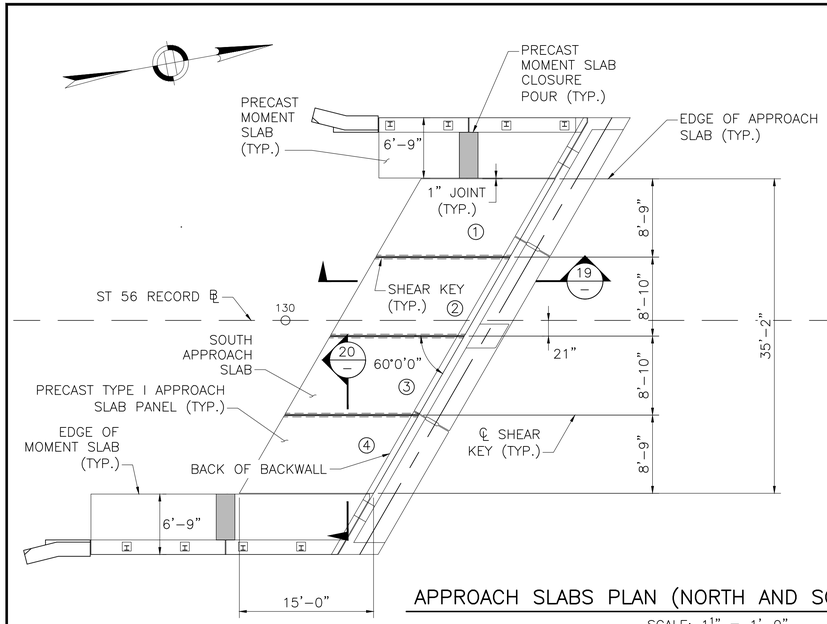

APPROACH SLABS PLAN (NORTH AND SOUTH ABUTMENTS)

SCALE: $1\frac{1}{2}$" = 1'-0"

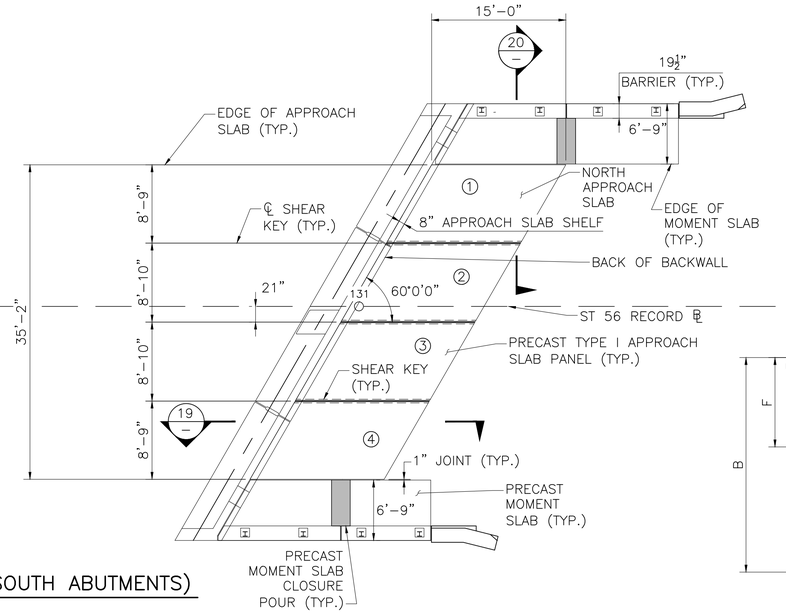

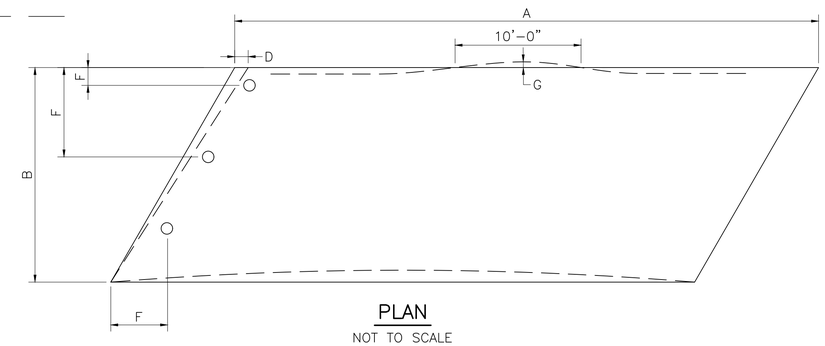

PLAN

NOT TO SCALE

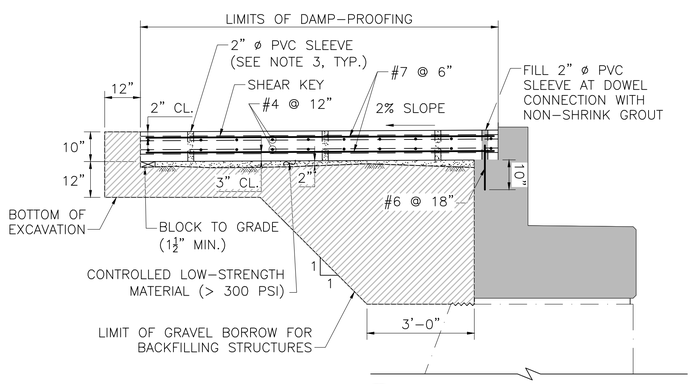

SECTION 19

SCALE: ½" = 1'-0"

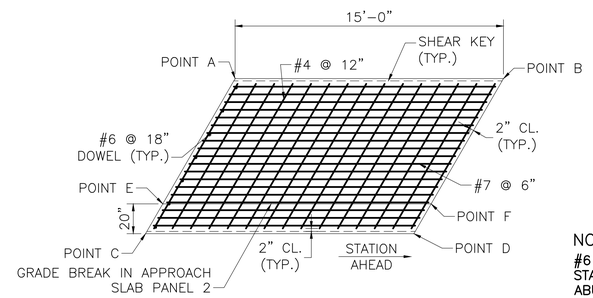

APPROACH SLAB REINFORCEMENT PLAN

SCALE: 3" = 1'-0"

NOTE:
#6 @ 18" DOWELS SHOWN ARE STATION BEHIND FOR NORTH ABUTMENT PRECAST APPROACH SLAB PANELS. DOWELS ARE ON STATION AHEAD END FOR SOUTH ABUTMENT PRECAST APPROACH SLAB PANELS.

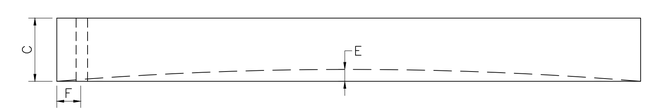

ELEVATION

NOT TO SCALE

APPROACH SLAB FABRICATION TOLERANCES

A	LENGTH (OVERALL)	±¼"
B	WIDTH (OVERALL)	±¼"
C	DEPTH (OVERALL)	±¼"
D	VARIATION FROM SPECIFIED PLAN END SQUARENESS OR SKEW	±½"
E	SWEEP OVER MEMBER LENGTH	±⅜"
F	LOCATION OF SLEEVE FOR DOWELS MEASURED FROM A WORKING LINE	±½"
G	LOCAL SMOOTHNESS OF ANY SURFACE	±¼" IN 10 FEET

SOUTH ABUTMENT BOTTOM OF APPROACH SLAB ELEVATIONS						
PRECAST PANEL	A	B	C	D	E	F
SOUTH 1	656.71	657.01	656.83	657.13	---	---
SOUTH 2	656.84	657.14	656.96	657.26	656.94	657.24
SOUTH 3	656.96	657.26	656.75	657.05	---	---
SOUTH 4	656.75	657.05	656.53	656.83	---	---

NORTH ABUTMENT BOTTOM OF APPROACH SLAB ELEVATIONS						
PRECAST PANEL	A	B	C	D	E	F
NORTH 1	657.75	657.45	657.87	657.57	---	---
NORTH 2	657.87	657.57	658.00	657.70	657.98	657.68
NORTH 3	658.00	657.70	657.79	657.49	---	---
NORTH 4	657.78	657.48	657.56	657.26	---	---

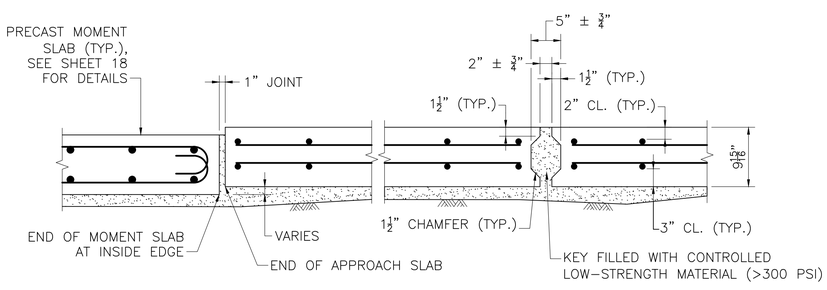

NOTE: ELEVATIONS SHOWN AT NORTHWEST JOINT BETWEEN APPROACH SLAB AND MOMENT SLAB.

SECTION 20

SCALE: 1" = 1'-0"

NOTES:

1. ALL SHEAR KEYS SHALL HAVE AN EXPOSED AGGREGATE FINISH.
2. PLACE LONGITUDINAL REINFORCEMENT PARALLEL TO THE RT 56 RECORD ℄ PLACE TRANSVERSE REINFORCEMENT PARALLEL TO ABUTMENT. ALL REINFORCEMENT SHALL NOT BE COATED.
3. PVC SLEEVES TO BE INCLUDED IN APPROACH SLABS TO FACILITATE PLACEMENT OF CONTROLLED LOW-STRENGTH MATERIAL (>300 PSI).

SEPT. 19, 2026	ISSUED FOR CONSTRUCTION
DATE	DESCRIPTION
THIS SHEET IS APPROVED FOR CONSTRUCTION BY MASSDOT AUTHORIZED SIGNATORY:	STATE BRIDGE ENGINEER
USE ONLY PRINTS OF LATEST DATE	

605323_BR_19(O06030)(APP_SLAB_DET).DWG Plotted on 3-Sep-2026 7:15 AM
02-September-2026
Final Structural Submittal (SF)

OXFORD
LEICESTER STREET/ST 56

STATE	FED. AID PROJ. NO.	SHEET NO.	TOTAL SHEETS
MA	HIP(NGB)-004S(015)X	45	66
PROJECT FILE NO.	605323		

FRAMING PLAN

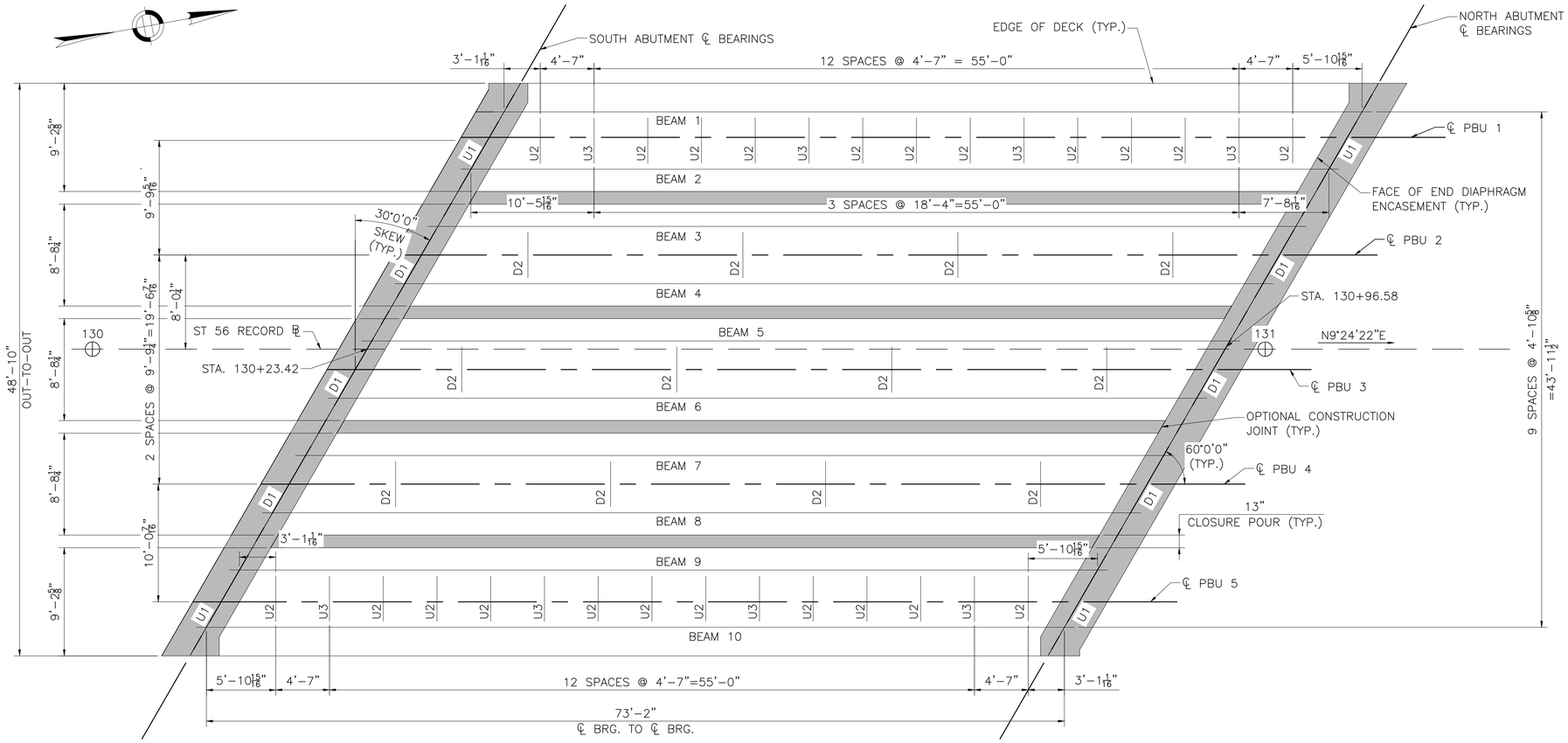

FRAMING PLAN

SCALE: 3/16" = 1'-0"

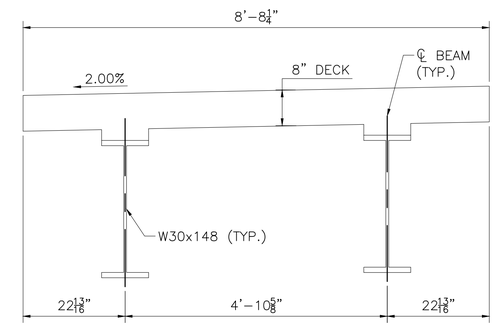

PBU 2 – CROSS SECTION

SCALE: 3/4" = 1'-0"

NOTE: PBU 4 SIMILAR BUT MIRRORED

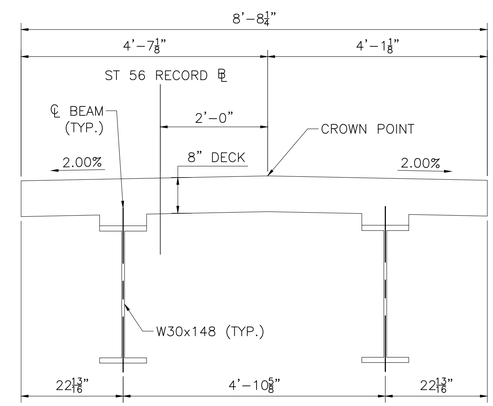

PBU 3 – CROSS SECTION

SCALE: 3/4" = 1'-0"

NOTES:

1. D1 = C15X33.9 (TYPICAL END DIAPHRAGM)
   D2 = C15X33.9 (TYPICAL INTERMEDIATE DIAPHRAGM)
   U1 = TYPICAL UTILITY SUPPORT AT ABUTMENTS
   U2 = TYPICAL UTILITY SUPPORT BETWEEN DIAPHRAGMS
   U3 = TYPICAL UTILITY SUPPORT AT DIAPHRAGMS
2. FOR DIAPHRAGM AND UTILITY SUPPORT DETAILS, SEE SHEETS 28 AND 29.
3. THE PRIMARY MEMBERS ARE BEAM 1 THROUGH BEAM 10.
4. ALL DIAPHRAGMS, DIAPHRAGM CONNECTION PLATES, AND SOLE PLATES ARE CONSIDERED SECONDARY MEMBERS.
5. ALL STEEL SHALL CONFORM TO AASHTO M 270 GRADE 50
6. ALL HIGH STRENGTH BOLTS SHALL BE 7/8" ø CONFORMING TO THE REQUIREMENTS OF ASTM F3125 GRADE A325 TYPE 1, UNLESS OTHERWISE NOTED. NUTS AND WASHERS SHALL BE LISTED AS SUITABLE IN THE ASTM F3125 SPECIFICATION FOR GRADE A325.
7. ALL CONNECTIONS HAVE BEEN DESIGNED FOR A CLASS A SURFACE CONDITION, ASSUMING A COEFFICIENT OF FRICTION OF THE FAYING SURFACES EQUAL TO OR GREATER THAN 0.30, EXCEPT FOR THE CONNECTION OF THE DIAPHRAGMS TO THE TRANSVERSE CONNECTION PLATE, WHICH HAS BEEN DESIGNED FOR CLASS C WITH A COEFFICIENT OF FRICITON OF 0.30.
8. ALL WELDING AND THE PREPARATION AND ASSEMBLY OF MATERIAL FOR WELDING SHALL CONFORM TO THE MASSDOT STANDARD SPECIFICATIONS FOR HIGHWAYS AND BRIDGES, THE BRIDGE WELDING CODE (AASHTO AWS D1.5) AND ALL INTERIM REVISIONS PUBLISHED BY AASHTO AS OF THE BID OPENING DATE.
9. ALL DIAPHRAGMS SHALL BE DETAILED AND FABRICATED TO THE TOTAL DEAD LOAD FIT (TDLF) CONDITION.
10. THE BEAMS SHALL BE FABRICATED SO THAT THE ENDS OF THE BEAMS ARE PLUMB UNDER FULL DEAD LOAD
11. ALL BEAMS SHALL BE METALIZED. THE ENTIRE FASCIA GIRDERS SHALL BE METALIZED AND PAINTED, AMS STANDARD 595A COLOR NUMBER 14223 OF THE FEDERAL STANDARD 595B. DIAPHRAGMS MAY BE HOT-DIP GALVANIZED.
12. LIFTING AND TEMPORARY SUPPORT LOCATIONS SHALL BE WITHIN 14'-1" OF THE CENTERLINE OF BEARINGS. THE ACTUAL LOCATIONS SHALL BE DETERMINED BY THE CONTRACTOR AND SUBMITTED WITH THE ASSEMBLY PLAN.

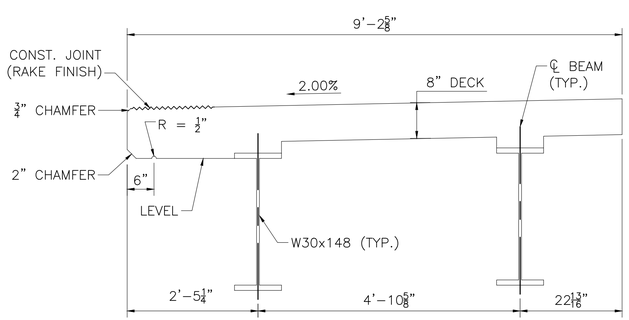

PBU 1 – CROSS SECTION

SCALE: 3/4" = 1'-0"

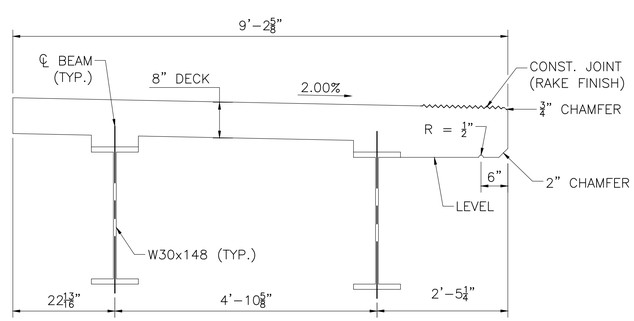

PBU 5 – CROSS SECTION

SCALE: 3/4" = 1'-0"

SEPT. 19, 2026	ISSUED FOR CONSTRUCTION
DATE	DESCRIPTION

THIS SHEET IS APPROVED FOR CONSTRUCTION BY MASSDOT AUTHORIZED SIGNATORY: STATE BRIDGE ENGINEER

USE ONLY PRINTS OF LATEST DATE

605323_BR_20-21(O06030)(FRAMING_PLAN).DWG Plotted on 3-Sep-2026 7:15 AM
02-September-2026
Final Structural Submittal (SF)

OXFORD
LEICESTER STREET/ST 56

STATE	FED. AID PROJ. NO.	SHEET NO.	TOTAL SHEETS
MA	HIP(NGB)-004S(015)X	46	66
PROJECT FILE NO.	605323		

TYPICAL SECTION

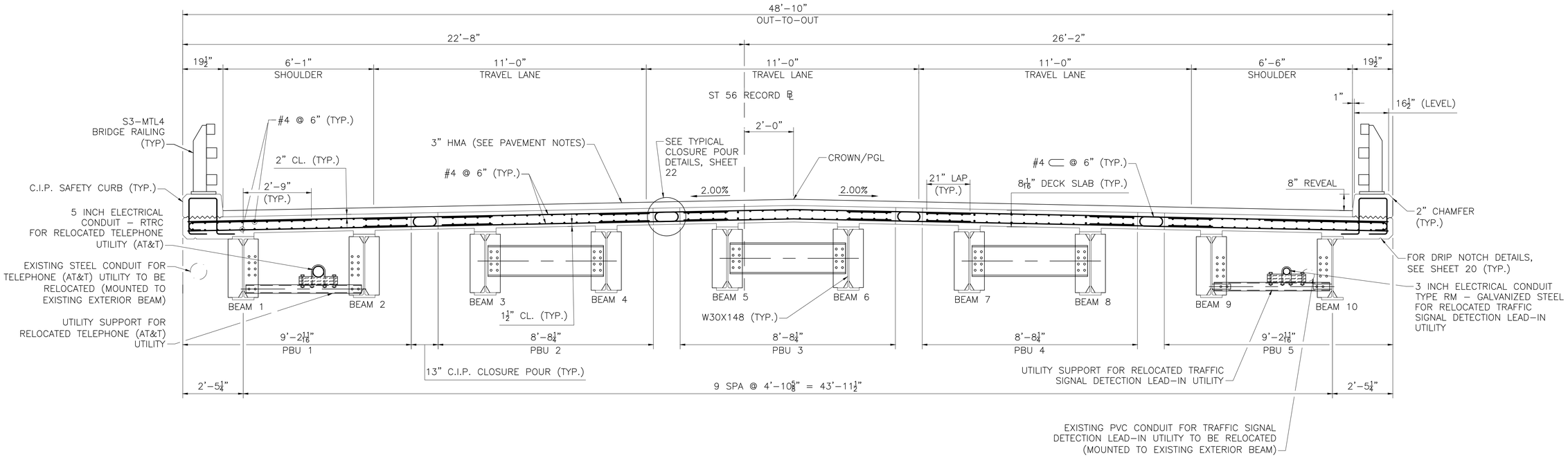

TYPICAL SECTION

SCALE: ½" = 1'-0"

NOTES:

1. FOR FRAMING PLAN, SEE SHEET 20.
2. FOR PBU DETAILS, SEE SHEET 22 THROUGH 25.
3. FOR DIAPHRAGM AND UTILITY SUPPORT DETAILS, SEE SHEETS 28 AND 29.
4. FOR S3-MTL4 BRIDGE RAIL DETAILS, SEE SHEETS 32 AND 33.

PAVEMENT NOTES:

1.50" SUPERPAVE BRIDGE SURFACE COURSE – 9.5 POLYMER (SSC-B-9.5-P) OVER ASPHALT EMULSION FOR TACK COAT OVER
1.50" SUPERPAVE BRIDGE PROTECTIVE COURSE – 9.5 POLYMER (SPC-B-9.5-P) OVER ASPHALT EMULSION FOR TACK COAT OVER
MEMBRANE WATERPROOFING FOR BRIDGE DECKS

SEPT. 19, 2026	ISSUED FOR CONSTRUCTION
DATE	DESCRIPTION
THIS SHEET IS APPROVED FOR CONSTRUCTION BY MASSDOT AUTHORIZED SIGNATORY:	STATE BRIDGE ENGINEER
USE ONLY PRINTS OF LATEST DATE	

605323_BR_20-21(O06030)(FRAMING_PLAN).DWG Plotted on 3-Sep-2026 7:15 AM
Final Structural Submittal (SF) 02-September-2026

OXFORD
LEICESTER STREET/ST 56

STATE	FED. AID PROJ. NO.	SHEET NO.	TOTAL SHEETS
MA	HIP(NGB)-004S(015)X	47	66
PROJECT FILE NO.	605323		

BEAM DETAILS 1 OF 6

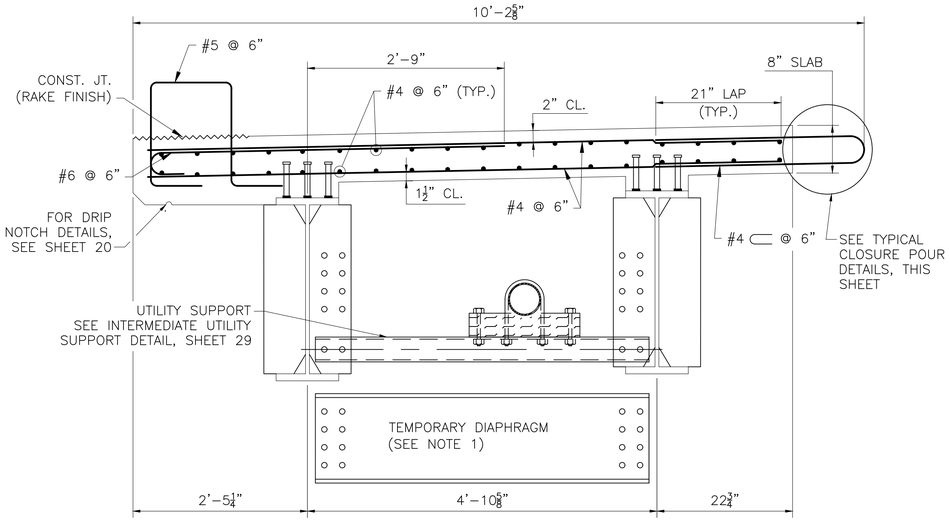

PBU 1 REINFORCEMENT

SCALE: 1" = 1'–0"

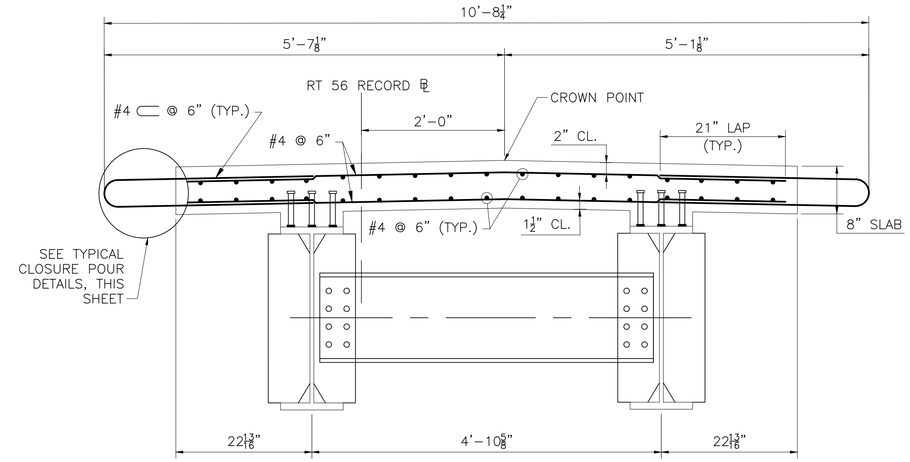

PBU 3 REINFORCEMENT

SCALE: 1" = 1'–0"

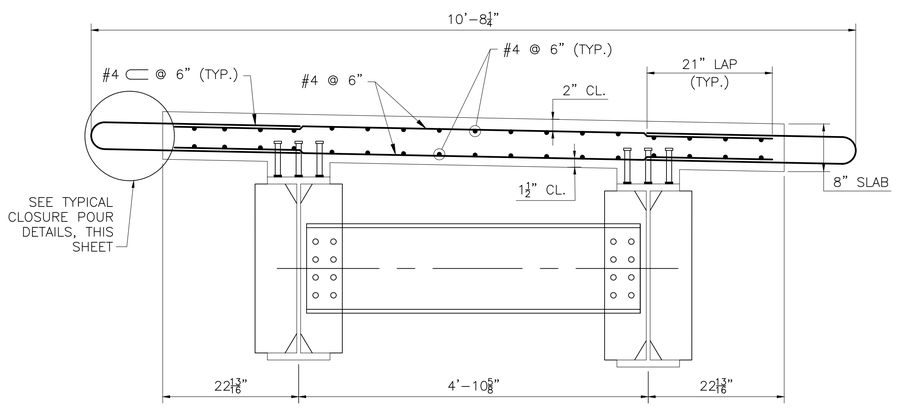

PBU 2 AND 4 REINFORCING

SCALE: 1" = 1'–0"

NOTE:
PBU 4 SHOWN, PBU 2 SIMILAR BUT MIRRORED

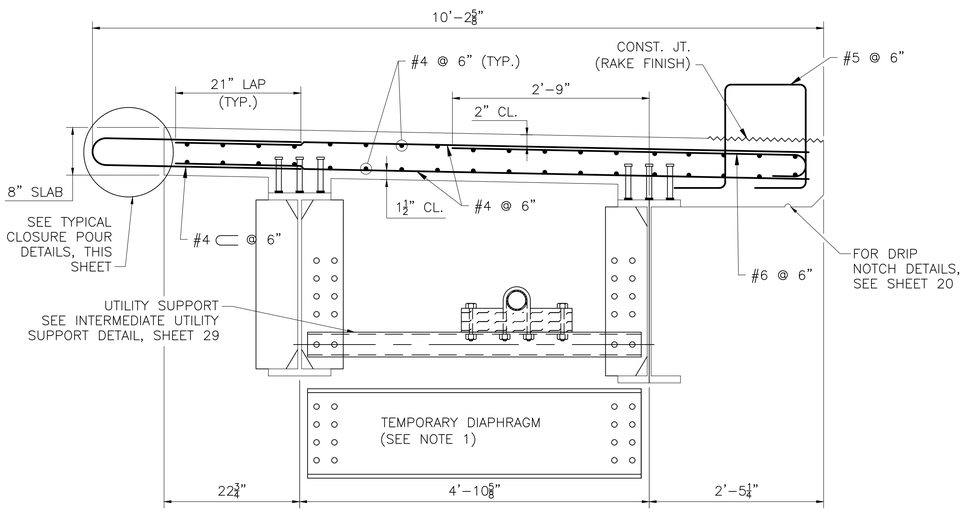

PBU 5 REINFORCEMENT

SCALE: 1" = 1'–0"

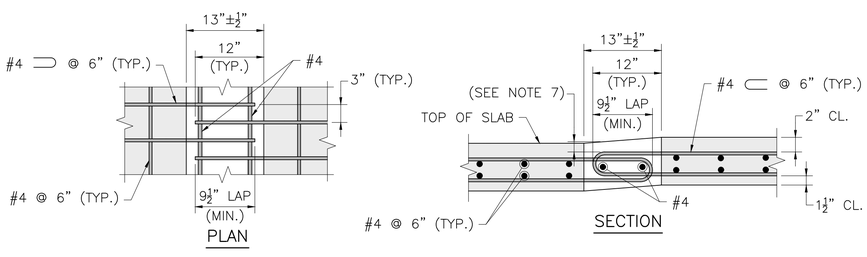

TYPICAL CLOSURE POUR DETAILS AND NOTES

SCALE: 1" = 1'–0"

NOTES:

1. A TEMPORARY DIAPHRAGM SHALL BE INSTALLED DURING THE FABRICATION OF THE PBU TO PROVIDE STABILITY WHEN POURING THE CONCRETE DECK. THE DIAPHRAGM SHALL BE LEVEL AND CENTERED MID–HEIGHT OF THE UP–SLOPE BEAM. AFTER THE CONCRETE DECK HAS CURED, THE TEMPORARY DIAPHRAGM SHALL BE REMOVED AND REPLACED WITH THE UTILITY SUPPORT AS SHOWN. THE BOLT HOLES IN THE CONNECTION PLATE USED FOR THE TEMPORARY DIAPHRAGM SHALL REMAIN UNFILLED AND ADDITIONAL PAINT WILL BE APPLIED AS NEEDED.
2. LONGITUDINAL REINFORCEMENT SHALL BE ORIENTED PARALLEL TO THE ℄ OF CONSTRUCTION. TRANSVERSE (PRIMARY) REINFORCEMENT SHALL BE ORIENTED PERPENDICULAR TO THE ℄ OF CONSTRUCTION.
3. ALL REINFORCEMENT SHALL BE COATED.

CLOSURE POUR NOTES:

1. EDGE OF DECK AT CLOSURE POUR SHALL HAVE EXPOSED AGGREGATE FINISH.
2. CLOSURE POUR REINFORCEMENT TO BE PLACED ALONG THE ENTIRE SPAN.
3. CLOSURE POUR REINFORCEMENT SHALL BE PLACED PERPENDICULAR TO BEAM EDGE.
4. METHOD OF FORMING CLOSURE POUR TO BE DETERMINED BY THE CONTRACTOR. THE FORMS SHALL BE REMOVABLE AND BE ABLE TO ACCOMMODATE DIFFERENTIAL CAMBER. FORM SUPPORTS SHOULD NOT PENETRATE THROUGH TOP OF POUR UNLESS APPROVED BY THE ENGINEER.
5. AT THE CONTRACTOR'S OPTION, GALVANIZED INSERTS MAY BE CAST INTO THE BEAMS TO FACILITATE FORMING OF THE CLOSURE POUR. THE INSERTS SHALL BE SHOWN ON THE SHOP DRAWINGS AND MAY NOT BE CLOSER THAN 2'–0" O.C.. CALCULATIONS SHALL BE PROVIDED ALONG WITH MANUFACTURER'S RECOMMENDATIONS DEMONSTRATING THAT THE INSERTS ARE SUFFICIENT FOR THE INTENDED PURPOSE.
6. CLOSURE POUR CONCRETE SHALL HAVE A MINIMUM 28 DAY COMPRESSIVE STRENGTH OF 5000 PSI AND SHALL REACH A COMPRESSIVE STRENGTH OF 3500 PSI BEFORE THE ROADWAY IS REOPENED TO PUBLIC TRAFFIC.
7. WHEN MINIMUM COVER OVER REINFORCEMENT IN THE CLOSURE POUR IS LESS THAN 1" USE CAMBER DIFFERENTIAL DETAIL.

SEPT. 19, 2026	ISSUED FOR CONSTRUCTION
DATE	DESCRIPTION
THIS SHEET IS APPROVED FOR CONSTRUCTION BY MASSDOT AUTHORIZED SIGNATORY:	STATE BRIDGE ENGINEER
USE ONLY PRINTS OF LATEST DATE	

605323_BR_22-27(006030)(BEAM_DET).DWG Plotted on 3-Sep-2026 7:15 AM
02-September-2026
Final Structural Submittal (SF)

OXFORD
LEICESTER STREET/ST 56

STATE	FED. AID PROJ. NO.	SHEET NO.	TOTAL SHEETS
MA	HIP(NGB)-004S(015)X	48	66
PROJECT FILE NO.	605323		

BEAM DETAILS 2 OF 6

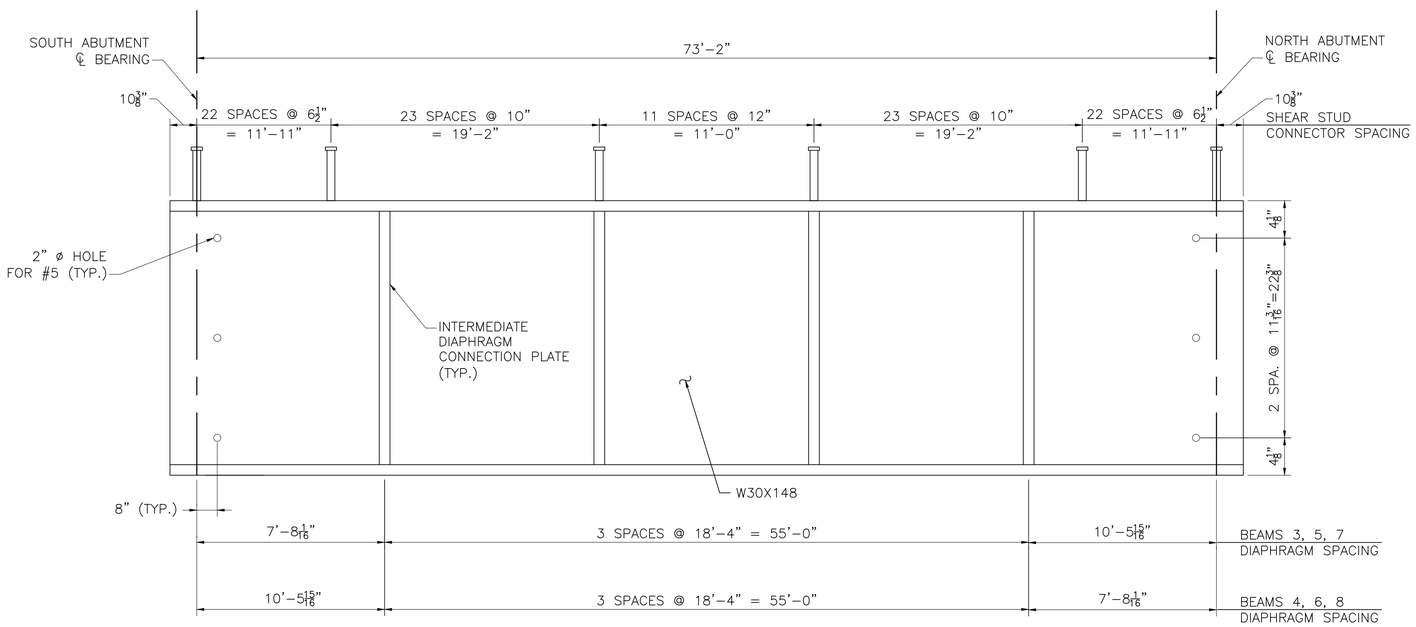

BEAM 3–8 ELEVATION

NOT TO SCALE

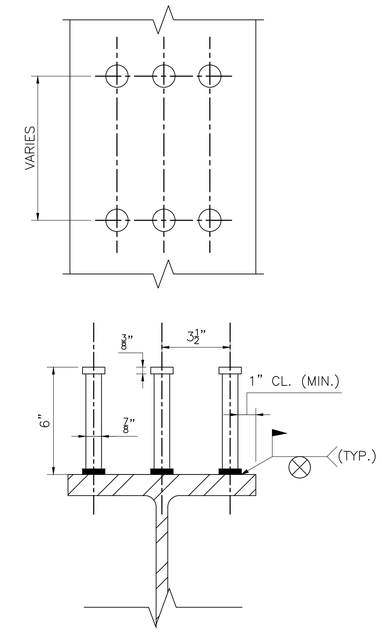

STUD SHEAR CONNECTORS

NOT TO SCALE

NOTES:

1. 3/4" ø STUDS MAY BE SUBSTITUTED FOR 7/8" ø STUDS BY ADJUSTING THE PITCH TO PROVIDE AN EQUIVALENT CROSS–SECTIONAL AREA PER FOOT.

SEPT. 19, 2026	ISSUED FOR CONSTRUCTION
DATE	DESCRIPTION
THIS SHEET IS APPROVED FOR CONSTRUCTION BY MASSDOT AUTHORIZED SIGNATORY:	STATE BRIDGE ENGINEER
USE ONLY PRINTS OF LATEST DATE	

605323_BR_22-27(006030)(BEAM_DET).DWG Plotted on 3-Sep-2026 7:15 AM
Final Structural Submittal (SF) 02-September-2026

OXFORD
LEICESTER STREET/ST 56

STATE	FED. AID PROJ. NO.	SHEET NO.	TOTAL SHEETS
MA	HIP(NGB)-004S(015)X	49	66
PROJECT FILE NO.	605323		

BEAM DETAILS 3 OF 6

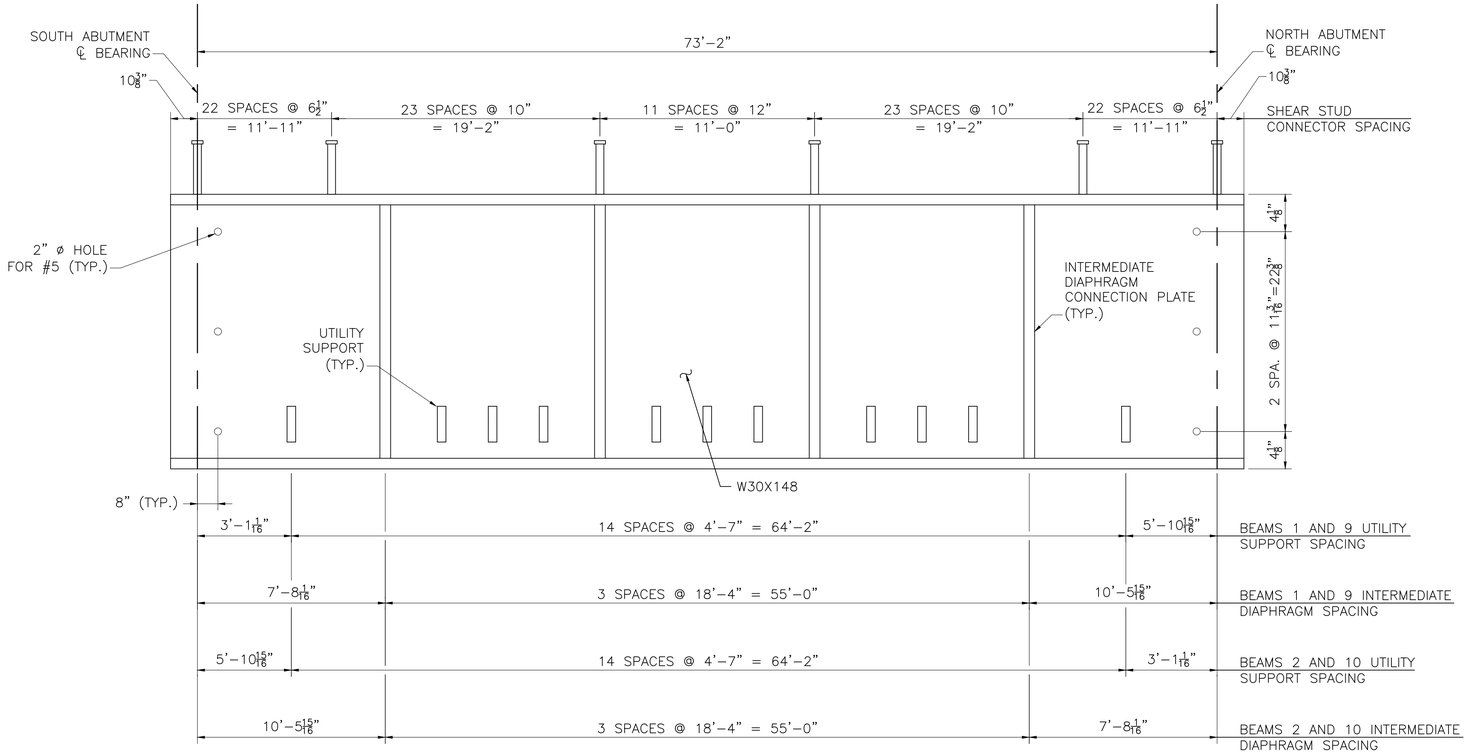

BEAM 1–2 AND 9–10 ELEVATION

NOT TO SCALE

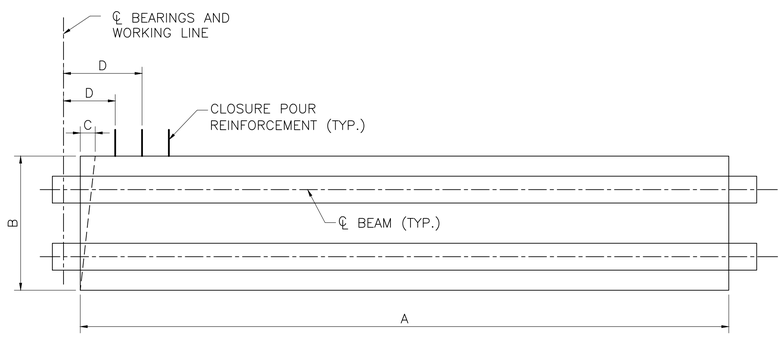

PBU FABRICATION PLAN

NOT TO SCALE

PBU FABRICATION TOLERANCES		
A	LENGTH (OVERALL)	±1/4"
B	WIDTH (OVERALL)	±1/4"
C	VARIATION FROM SPECIFIED PLAN END SQUARENESS OR SKEW	±1/2"
D	LOCATION OF REINFORCEMENT (MEASURED FROM WORKING LINE)	±1/4"
E	LOCAL SMOOTHNESS OF ANY SURFACE	±1/4" IN 10 FEET

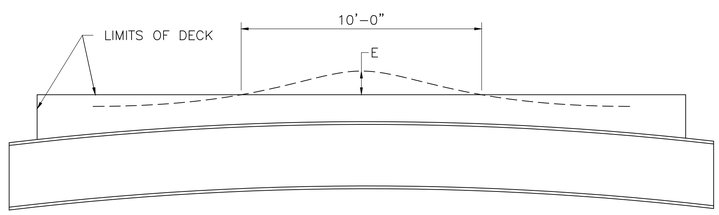

PBU FABRICATION ELEVATION

NOT TO SCALE

SEPT. 19, 2026	ISSUED FOR CONSTRUCTION
DATE	DESCRIPTION

THIS SHEET IS APPROVED FOR CONSTRUCTION BY MASSDOT
AUTHORIZED SIGNATORY: STATE BRIDGE ENGINEER

USE ONLY PRINTS OF LATEST DATE

605323_BR_22-27(O06030)(BEAM_DET).DWG Plotted on 3-Sep-2026 7:15 AM
Final Structural Submittal (SF) 02-September-2026

OXFORD
LEICESTER STREET/ST 56

STATE	FED. AID PROJ. NO.	SHEET NO.	TOTAL SHEETS
MA	HIP(NGB)-004S(015)X	50	66
PROJECT FILE NO.	605323		

BEAM DETAILS 4 OF 6

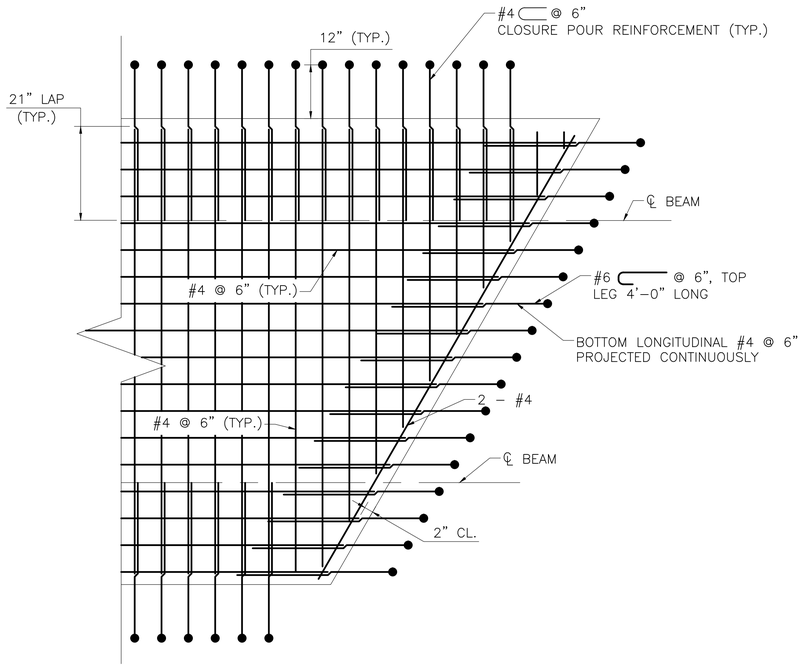

TYPICAL INTERIOR PBU REINFORCEMENT

SCALE: $\frac{3}{4}$" = 1'-0"

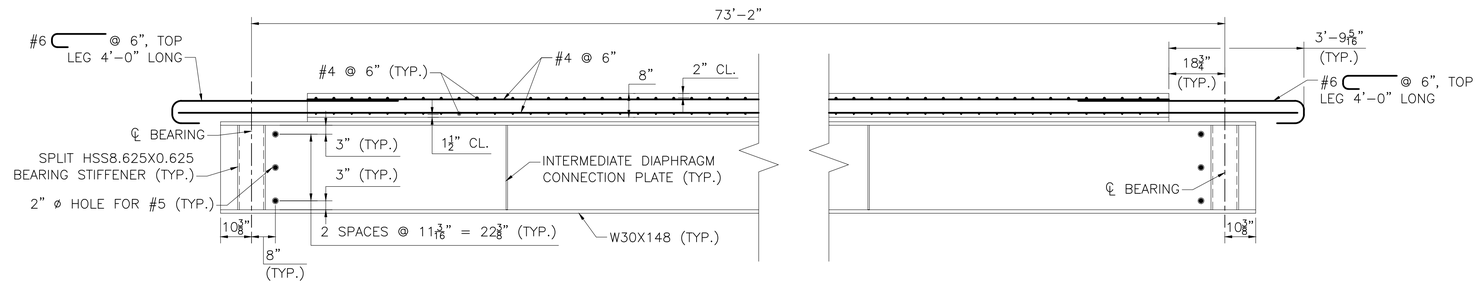

NOTES:

1. FOR DIAPHRAGM AND UTILITY SUPPORT LOCATIONS AND SPACING, SEE FRAMING PLAN, SHEET 20, AND BEAM ELEVATIONS, SHEETS 23 AND 24.
2. FOR DIAPHRAGM CONNECTION PLATE AND UTILITY SUPPORT DETAILS, SEE SHEETS 28 AND 29.

LONGITUDINAL SECTION

SCALE: $\frac{1}{2}$" = 1'-0"

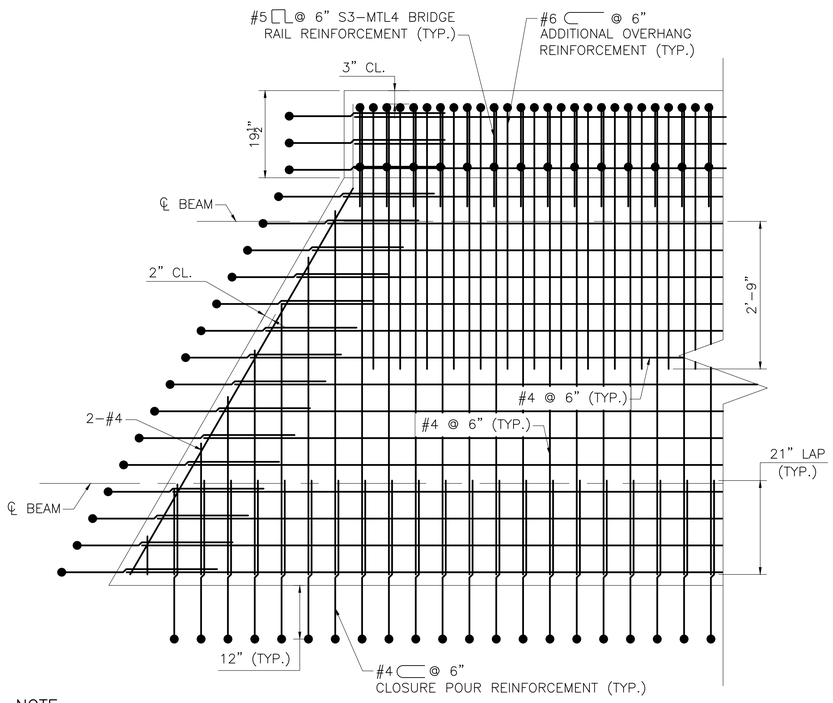

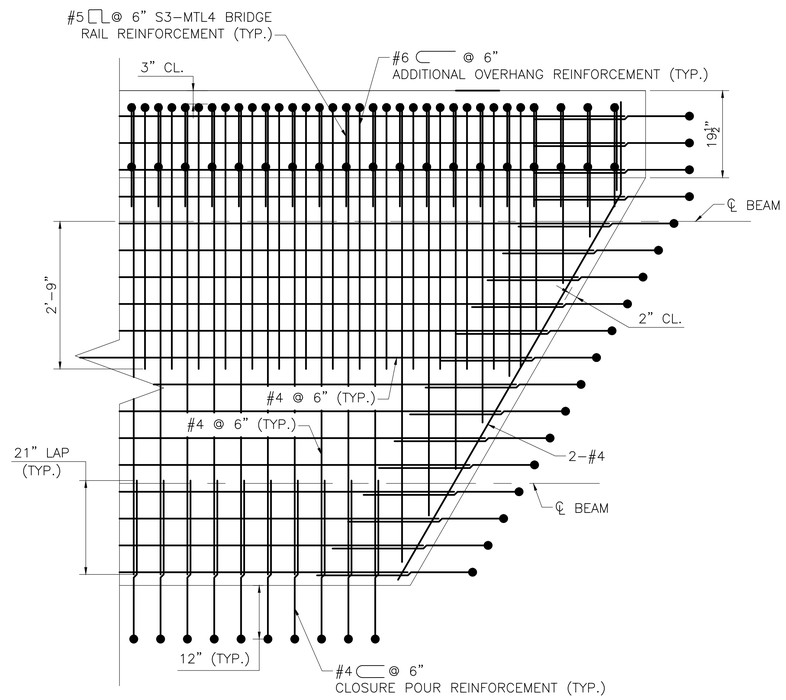

NOTE:

PBU 1 SHOWN. PBU 5 SIMILAR.

TYPICAL EXTERIOR PBU REINFORCEMENT

SCALE: $\frac{3}{4}$" = 1'-0"

SEPT. 19, 2026	ISSUED FOR CONSTRUCTION
DATE	DESCRIPTION
THIS SHEET IS APPROVED FOR CONSTRUCTION BY MASSDOT AUTHORIZED SIGNATORY:	STATE BRIDGE ENGINEER
USE ONLY PRINTS OF LATEST DATE	

605323_BR_22-27(C06030)(BEAM_DET).DWG Plotted on 3-Sep-2026 7:15 AM
Final Structural Submittal (SF) 02-September-2026

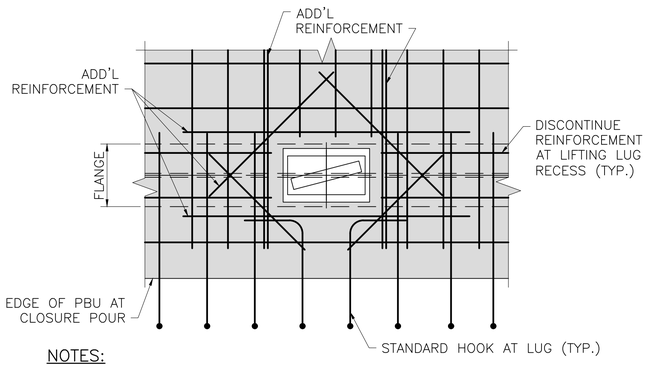

NOTES:

1. TYPICAL PBU SHOWN. ADJUST DECK OVERHANG AND BARRIER REINFORCEMENT SIMILARLY AT FASCIA UNITS.
2. BOTTOM REINFORCEMENT NOT SHOWN FOR CLARITY, BUT SHALL BE SIMILAR.

DECK REINFORCEMENT AT LIFTING LUG RECESS

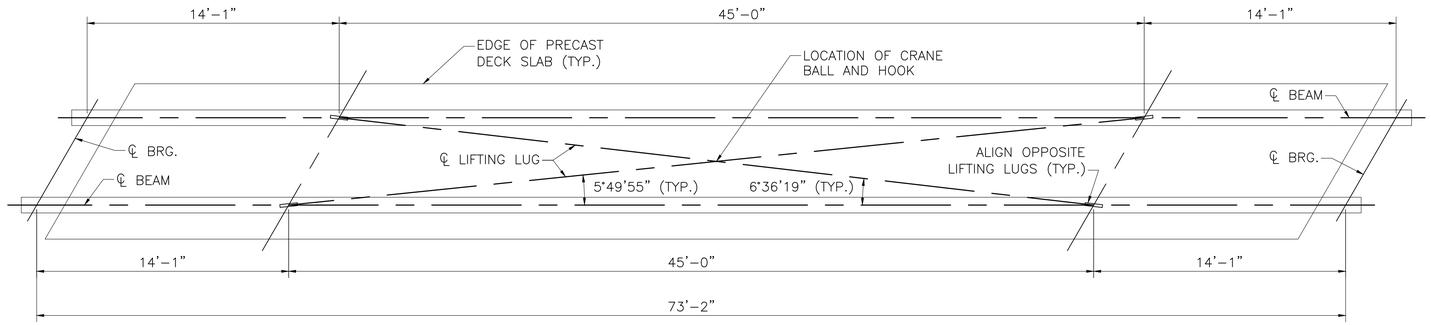

SINGLE CRANE PICK PLAN

SCALE: $\frac{1}{4}$" = 1'–0"

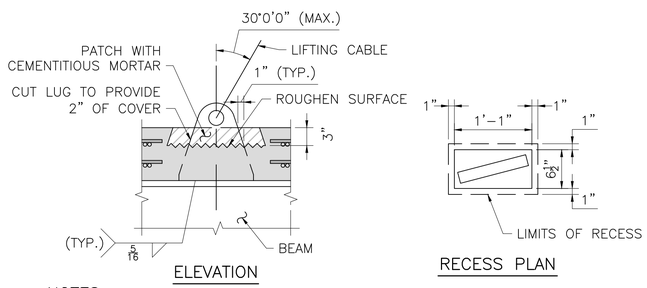

ELEVATION

RECESS PLAN

NOTES:

1. CHARPY V–NOTCH TESTING IS NOT REQUIRED FOR LIFTING LUG PLATE STOCK.
2. LIFTING LUG PLATE DIMENSIONS AND CONNECTION WELD SIZE ARE TO BE DETERMINED BY DESIGN.

LIFTING LUG DETAILS

SCALE: 1" = 1'–0"

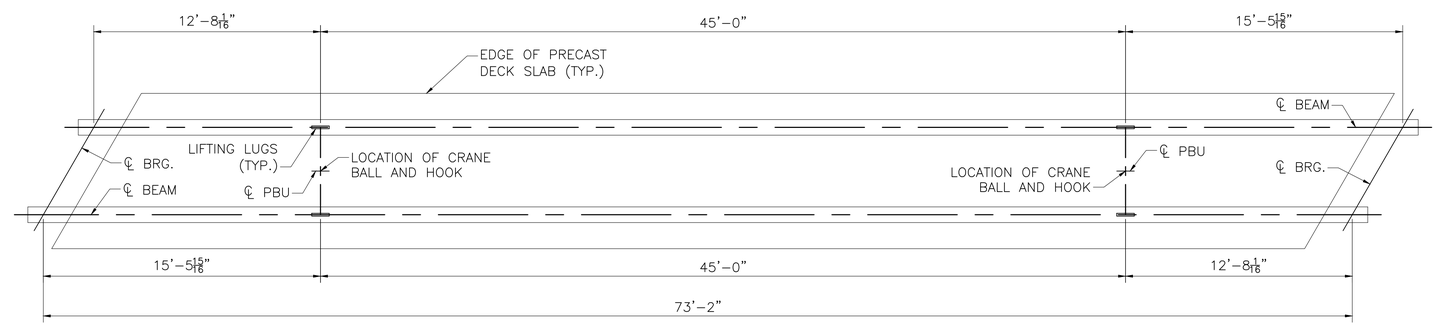

DUAL CRANE PICK PLAN

SCALE: $\frac{1}{4}$" = 1'–0"

NOTE:

THE DETAILS SHOWN ARE CONCEPTUAL. THE CONTRACTOR IS RESPONSIBLE FOR DEVELOPING THE ERECTION PLAN INCLUDING THE ACTUAL LOCATION AND TYPE OF LIFTING DEVICES.

SEPT. 19, 2026	ISSUED FOR CONSTRUCTION
DATE	DESCRIPTION
THIS SHEET IS APPROVED FOR CONSTRUCTION BY MASSDOT AUTHORIZED SIGNATORY:	STATE BRIDGE ENGINEER
USE ONLY PRINTS OF LATEST DATE	

605323_BR_22-27(006030)(BEAM_DET).DWG Plotted on 3-Sep-2026 7:15 AM
Final Structural Submittal (SF) 02-September-2026

OXFORD
LEICESTER STREET/ST 56

STATE	FED. AID PROJ. NO.	SHEET NO.	TOTAL SHEETS
MA	HIP(NGB)-004S(015)X	52	66
PROJECT FILE NO.	605323		

BEAM DETAILS 6 OF 6

CAMBER TABLE

BM. NO.		SPAN NO. 1										
		SOUTH ABUT. ℄ BRG.	0.1L	0.2L	0.3L	0.4L	0.5L	0.6L	0.7L	0.8L	0.9L	NORTH ABUT, ℄ BRG.
1	STEEL DL DEFLECTION	0	0.170	0.322	0.442	0.516	0.541	0.516	0.442	0.322	0.170	0
	CONC. DL DEFLECTION	0	0.632	1.194	1.635	1.916	2.011	1.916	1.635	1.194	0.632	0
	S.D.L. DEFLECTION	0	0.173	0.328	0.450	0.527	0.552	0.527	0.450	0.328	0.173	0
	VERT. CURVE CAMBER	0	0	0	0	0	0	0	0	0	0	0
	ADDITIONAL CAMBER	0	0.338	0.594	0.773	0.879	0.915	0.879	0.773	0.594	0.338	0
	TOTAL CAMBER	0	1.313	2.438	3.300	3.838	4.019	3.838	3.300	2.438	1.313	0

CAMBER TABLE

BM. NO.		SPAN NO. 1										
		SOUTH ABUT. ℄ BRG.	0.1L	0.2L	0.3L	0.4L	0.5L	0.6L	0.7L	0.8L	0.9L	NORTH ABUT, ℄ BRG.
2	STEEL DL DEFLECTION	0	0.162	0.307	0.420	0.492	0.517	0.492	0.420	0.307	0.162	0
	CONC. DL DEFLECTION	0	0.538	1.018	1.393	1.632	1.714	1.632	1.393	1.018	0.538	0
	S.D.L. DEFLECTION	0	0.137	0.258	0.355	0.415	0.435	0.415	0.355	0.258	0.137	0
	VERT. CURVE CAMBER	0	0	0	0	0	0	0	0	0	0	0
	ADDITIONAL CAMBER	0	0.338	0.594	0.773	0.879	0.915	0.879	0.773	0.594	0.338	0
	TOTAL CAMBER	0	1.175	2.177	2.941	3.418	3.581	3.418	2.941	2.177	1.175	0

CAMBER TABLE

BM. NO.		SPAN NO. 1										
		SOUTH ABUT. ℄ BRG.	0.1L	0.2L	0.3L	0.4L	0.5L	0.6L	0.7L	0.8L	0.9L	NORTH ABUT, ℄ BRG.
3	STEEL DL DEFLECTION	0	0.162	0.307	0.421	0.492	0.517	0.492	0.421	0.307	0.162	0
	CONC. DL DEFLECTION	0	0.538	1.018	1.393	1.632	1.714	1.632	1.393	1.018	0.538	0
	S.D.L. DEFLECTION	0	0.137	0.258	0.355	0.415	0.435	0.415	0.355	0.258	0.137	0
	VERT. CURVE CAMBER	0	0	0	0	0	0	0	0	0	0	0
	ADDITIONAL CAMBER	0	0.338	0.594	0.773	0.879	0.915	0.879	0.773	0.594	0.338	0
	TOTAL CAMBER	0	1.175	2.177	2.942	3.418	3.581	3.418	2.942	2.177	1.175	0

CAMBER TABLE

BM. NO.		SPAN NO. 1										
		SOUTH ABUT. ℄ BRG.	0.1L	0.2L	0.3L	0.4L	0.5L	0.6L	0.7L	0.8L	0.9L	NORTH ABUT, ℄ BRG.
4	STEEL DL DEFLECTION	0	0.162	0.307	0.420	0.492	0.517	0.492	0.420	0.307	0.162	0
	CONC. DL DEFLECTION	0	0.538	1.018	1.393	1.632	1.714	1.632	1.393	1.018	0.538	0
	S.D.L. DEFLECTION	0	0.137	0.258	0.355	0.415	0.435	0.415	0.355	0.258	0.137	0
	VERT. CURVE CAMBER	0	0	0	0	0	0	0	0	0	0	0
	ADDITIONAL CAMBER	0	0.338	0.594	0.773	0.879	0.915	0.879	0.773	0.594	0.338	0
	TOTAL CAMBER	0	1.175	2.177	2.941	3.418	3.581	3.418	2.941	2.177	1.175	0

CAMBER TABLE

BM. NO.		SPAN NO. 1										
		SOUTH ABUT. ℄ BRG.	0.1L	0.2L	0.3L	0.4L	0.5L	0.6L	0.7L	0.8L	0.9L	NORTH ABUT, ℄ BRG.
5	STEEL DL DEFLECTION	0	0.162	0.307	0.421	0.492	0.517	0.492	0.421	0.307	0.162	0
	CONC. DL DEFLECTION	0	0.538	1.018	1.393	1.632	1.714	1.632	1.393	1.018	0.538	0
	S.D.L. DEFLECTION	0	0.137	0.258	0.355	0.415	0.435	0.415	0.355	0.258	0.137	0
	VERT. CURVE CAMBER	0	0	0	0	0	0	0	0	0	0	0
	ADDITIONAL CAMBER	0	0.338	0.594	0.773	0.879	0.915	0.879	0.773	0.594	0.338	0
	TOTAL CAMBER	0	1.175	2.177	2.942	3.418	3.581	3.418	2.942	2.177	1.175	0

CAMBER TABLE

BM. NO.		SPAN NO. 1										
		SOUTH ABUT. ℄ BRG.	0.1L	0.2L	0.3L	0.4L	0.5L	0.6L	0.7L	0.8L	0.9L	NORTH ABUT, ℄ BRG.
6	STEEL DL DEFLECTION	0	0.162	0.307	0.420	0.492	0.517	0.492	0.420	0.307	0.162	0
	CONC. DL DEFLECTION	0	0.538	1.018	1.393	1.632	1.714	1.632	1.393	1.018	0.538	0
	S.D.L. DEFLECTION	0	0.137	0.258	0.355	0.415	0.435	0.415	0.355	0.258	0.137	0
	VERT. CURVE CAMBER	0	0	0	0	0	0	0	0	0	0	0
	ADDITIONAL CAMBER	0	0.338	0.594	0.773	0.879	0.915	0.879	0.773	0.594	0.338	0
	TOTAL CAMBER	0	1.175	2.177	2.941	3.418	3.581	3.418	2.941	2.177	1.175	0

CAMBER TABLE

BM. NO.		SPAN NO. 1										
		SOUTH ABUT. ℄ BRG.	0.1L	0.2L	0.3L	0.4L	0.5L	0.6L	0.7L	0.8L	0.9L	NORTH ABUT, ℄ BRG.
7	STEEL DL DEFLECTION	0	0.162	0.307	0.421	0.492	0.517	0.492	0.421	0.307	0.162	0
	CONC. DL DEFLECTION	0	0.538	1.018	1.393	1.632	1.714	1.632	1.393	1.018	0.538	0
	S.D.L. DEFLECTION	0	0.137	0.258	0.355	0.415	0.435	0.415	0.355	0.258	0.137	0
	VERT. CURVE CAMBER	0	0	0	0	0	0	0	0	0	0	0
	ADDITIONAL CAMBER	0	0.338	0.594	0.773	0.879	0.915	0.879	0.773	0.594	0.338	0
	TOTAL CAMBER	0	1.175	2.177	2.942	3.418	3.581	3.418	2.942	2.177	1.175	0

CAMBER TABLE

BM. NO.		SPAN NO. 1										
		SOUTH ABUT. ℄ BRG.	0.1L	0.2L	0.3L	0.4L	0.5L	0.6L	0.7L	0.8L	0.9L	NORTH ABUT, ℄ BRG.
8	STEEL DL DEFLECTION	0	0.162	0.307	0.420	0.492	0.517	0.492	0.420	0.307	0.162	0
	CONC. DL DEFLECTION	0	0.538	1.018	1.393	1.632	1.714	1.632	1.393	1.018	0.538	0
	S.D.L. DEFLECTION	0	0.137	0.258	0.355	0.415	0.435	0.415	0.355	0.258	0.137	0
	VERT. CURVE CAMBER	0	0	0	0	0	0	0	0	0	0	0
	ADDITIONAL CAMBER	0	0.338	0.594	0.773	0.879	0.915	0.879	0.773	0.594	0.338	0
	TOTAL CAMBER	0	1.175	2.177	2.941	3.418	3.581	3.418	2.941	2.177	1.175	0

CAMBER TABLE

BM. NO.		SPAN NO. 1										
		SOUTH ABUT. ℄ BRG.	0.1L	0.2L	0.3L	0.4L	0.5L	0.6L	0.7L	0.8L	0.9L	NORTH ABUT, ℄ BRG.
9	STEEL DL DEFLECTION	0	0.167	0.315	0.431	0.505	0.530	0.505	0.431	0.315	0.167	0
	CONC. DL DEFLECTION	0	0.538	1.016	1.391	1.630	1.711	1.630	1.391	1.016	0.538	0
	S.D.L. DEFLECTION	0	0.142	0.268	0.369	0.431	0.452	0.431	0.369	0.268	0.142	0
	VERT. CURVE CAMBER	0	0	0	0	0	0	0	0	0	0	0
	ADDITIONAL CAMBER	0	0.338	0.594	0.773	0.879	0.915	0.879	0.773	0.594	0.338	0
	TOTAL CAMBER	0	1.185	2.193	2.964	3.445	3.608	3.445	2.964	2.193	1.185	0

CAMBER TABLE

BM. NO.		SPAN NO. 1										
		SOUTH ABUT. ℄ BRG.	0.1L	0.2L	0.3L	0.4L	0.5L	0.6L	0.7L	0.8L	0.9L	NORTH ABUT, ℄ BRG.
10	STEEL DL DEFLECTION	0	0.167	0.315	0.431	0.505	0.530	0.505	0.431	0.315	0.167	0
	CONC. DL DEFLECTION	0	0.631	1.192	1.633	1.912	2.009	1.912	1.633	1.192	0.631	0
	S.D.L. DEFLECTION	0	0.170	0.322	0.442	0.517	0.543	0.517	0.442	0.322	0.170	0
	VERT. CURVE CAMBER	0	0	0	0	0	0	0	0	0	0	0
	ADDITIONAL CAMBER	0	0.338	0.594	0.773	0.879	0.915	0.879	0.773	0.594	0.338	0
	TOTAL CAMBER	0	1.306	2.423	3.279	3.813	3.997	3.813	3.279	2.423	1.306	0

THEORETICAL TOP OF CURB FORM ELEVATIONS ALONG THE SPAN LENGTH

	INCREASING STATIONS										
	SOUTH ABUT. ℄ BRG.	0.1L	0.2L	0.3L	0.4L	0.5L	0.6L	0.7L	0.8L	0.9L	NORTH ABUT, ℄ BRG.
LEFT CURB	659.87	659.95	660.04	660.12	660.20	660.27	660.34	660.40	660.46	660.50	660.56
RIGHT CURB	659.63	659.71	659.80	659.88	659.95	660.03	660.09	660.16	660.22	660.27	660.32

NOTES:

1. REFERENCE FOR RIGHT CURB AND LEFT CURB IS LOOKING UP STATION.
2. THE THEORETICAL TOP OF CURB ELEVATIONS ARE CALCULATED BY TAKING THE PROPOSED TOP OF HMA ELEVATION AT THE CURB LINE ALONG THE SPAN AT THE POINTS INDICATED IN THE TABLE AND ADDING TO IT THE SUPERIMPOSED DEAD LOAD DEFLECTION AND THE REQUIRED CURB REVEAL.

DATE	DESCRIPTION
SEPT. 19, 2026	ISSUED FOR CONSTRUCTION

THIS SHEET IS APPROVED FOR CONSTRUCTION BY MASSDOT
AUTHORIZED SIGNATORY: STATE BRIDGE ENGINEER
USE ONLY PRINTS OF LATEST DATE

605323_BR_22-27(006030)(BEAM_DET).DWG Plotted on 3-Sep-2026 7:16 AM
02-September-2026
Final Structural Submittal (SF)

OXFORD
LEICESTER STREET/ST 56

STATE	FED. AID PROJ. NO.	SHEET NO.	TOTAL SHEETS
MA	HIP(NGB)-004S(015)X	53	66
PROJECT FILE NO.	605323		

DIAPHRAGM & UTILITY SUPPORT DETAILS 1 OF 2

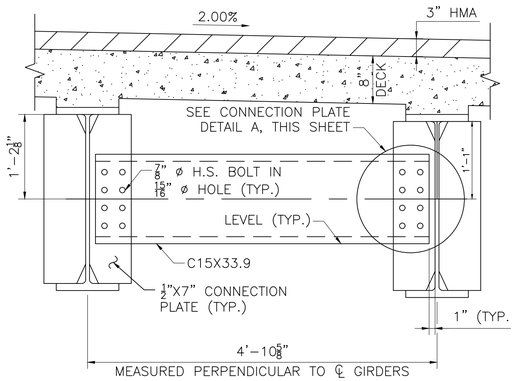

INTERMEDIATE DIAPHRAGM

SCALE: 1" = 1'-0"

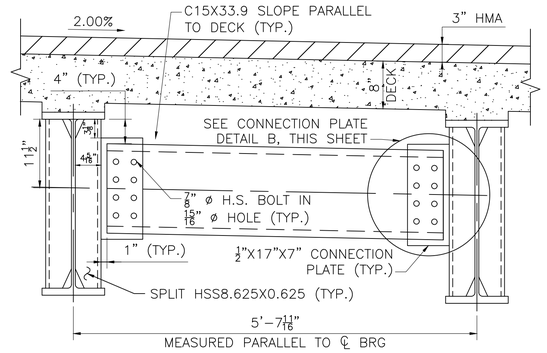

END DIAPHRAGM

SCALE: 1" = 1'-0"

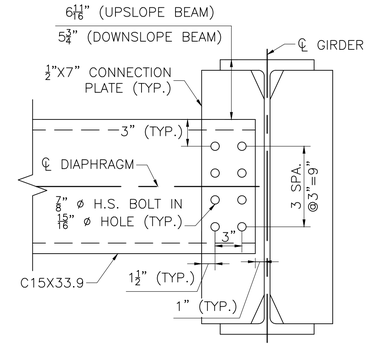

CONNECTION PLATE DETAIL A

SCALE: 1 1/2" = 1'-0"

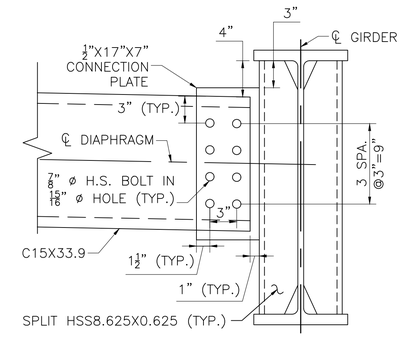

CONNECTION PLATE DETAIL B

SCALE: 1 1/2" = 1'-0"

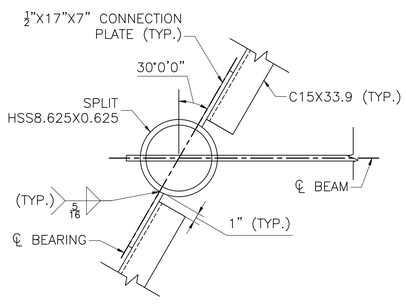

PLAN

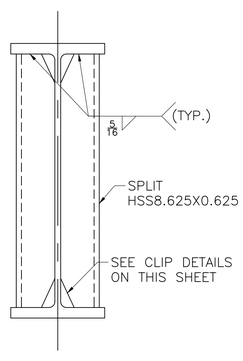

VERTICAL SECTION

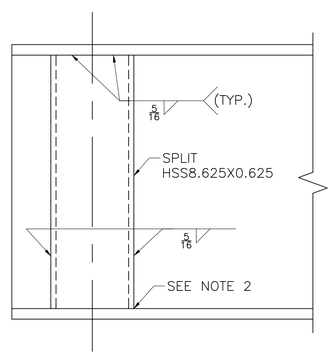

ELEVATION

ROUND BEARING STIFFENER

SCALE: 1 1/2" = 1'-0"

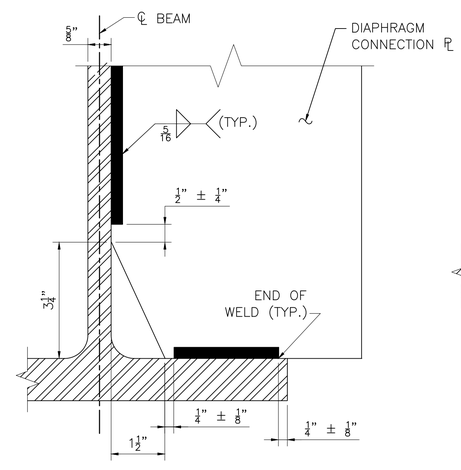

STANDARD

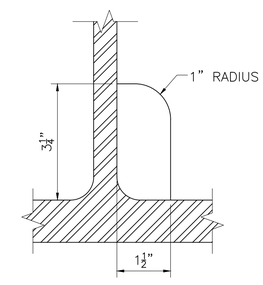

ALTERNATE

STIFFENER AND CONNECTION PLATE CLIP DETAILS

NOT TO SCALE

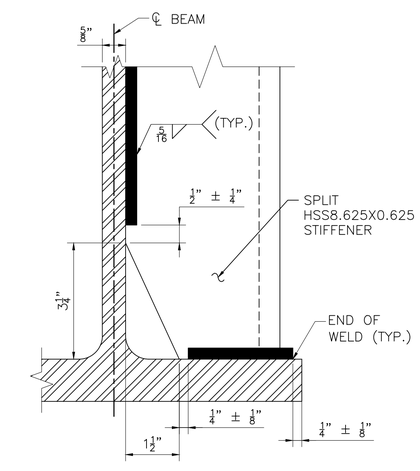

ROUND BEARING STIFFENER CLIP DETAIL

NOT TO SCALE

NOTES:

1. ALL BEARING STIFFENERS SHALL BE PLUMB.
2. BEARING STIFFENERS AT TENSION FLANGE CAN BE WELDED WITH A COMPLETE JOINT PENETRATION WELD (CJP) WITH A REINFORCING FILLET OR FABRICATED FOR TIGHT FIT AND WELDED WITH 5/16" FILLET WELDS BOTH SIDES OF THE STIFFENER.
3. ROUND HSS SHALL CONFORM TO THE REQUIREMENTS OF ASTM A500 GRADE C.
4. FOR FRAMING PLAN, SEE SHEET 20.
5. FOR UTILITY SUPPORT DETAILS, SEE SHEET 29.

DATE	DESCRIPTION
SEPT. 19, 2026	ISSUED FOR CONSTRUCTION

THIS SHEET IS APPROVED FOR CONSTRUCTION BY MASSDOT
AUTHORIZED SIGNATORY: STATE BRIDGE ENGINEER

USE ONLY PRINTS OF LATEST DATE

605323_BR_28-29(O06030)DIA_DET).DWG Plotted on 3-Sep-2026 7:16 AM
Final Structural Submittal (SF) 02-September-2026

OXFORD
LEICESTER STREET/ST 56

STATE	FED. AID PROJ. NO.	SHEET NO.	TOTAL SHEETS
MA	HIP(NGB)-004S(015)X	54	66
PROJECT FILE NO.	605323		

DIAPHRAGM & UTILITY SUPPORT DETAILS 2 OF 2

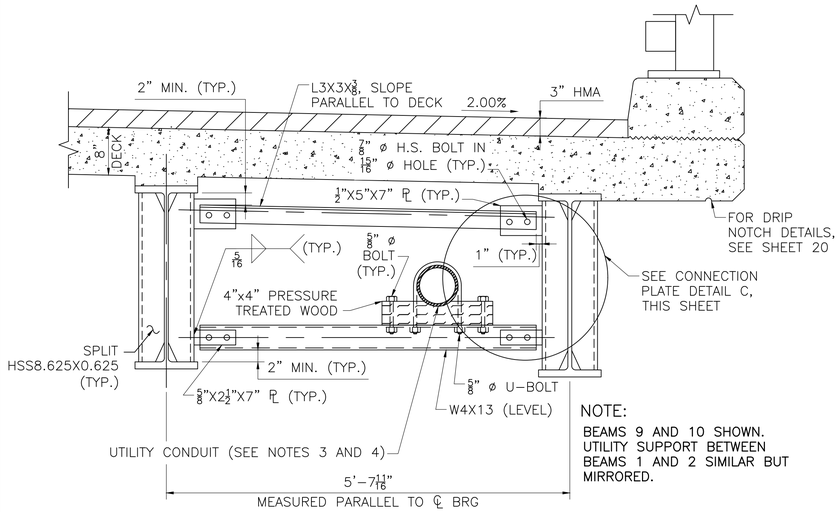

NOTE:
BEAMS 9 AND 10 SHOWN. UTILITY SUPPORT BETWEEN BEAMS 1 AND 2 SIMILAR BUT MIRRORED.

UTILITY SUPPORT – U1

SCALE: 1" = 1'-0"

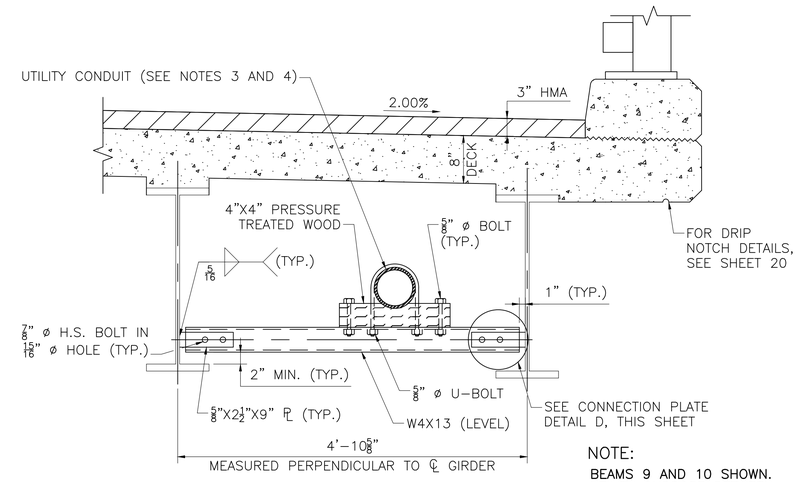

NOTE:
BEAMS 9 AND 10 SHOWN. UTILITY SUPPORT BETWEEN BEAMS 1 AND 2 SIMILAR BUT MIRRORED.

INTERMEDIATE UTILITY SUPPORT – U2

SCALE: 1" = 1'-0"

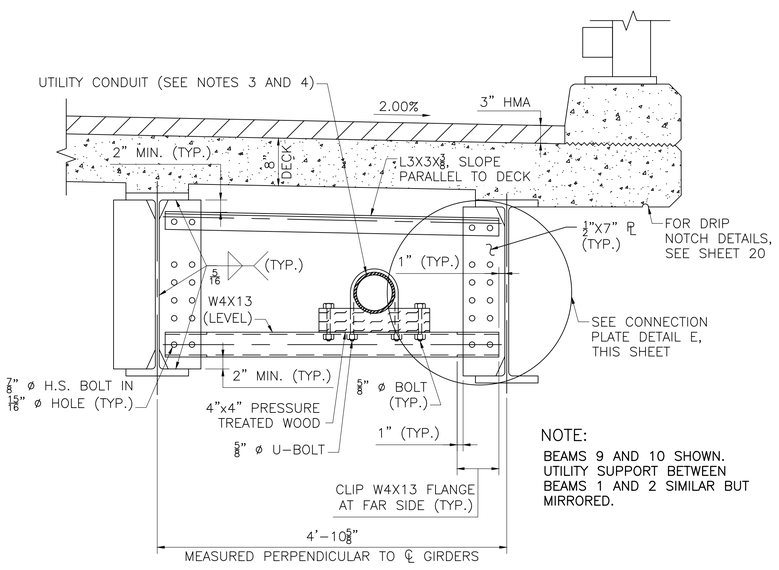

NOTE:
BEAMS 9 AND 10 SHOWN. UTILITY SUPPORT BETWEEN BEAMS 1 AND 2 SIMILAR BUT MIRRORED.

UTILITY SUPPORT – U3

SCALE: 1" = 1'-0"

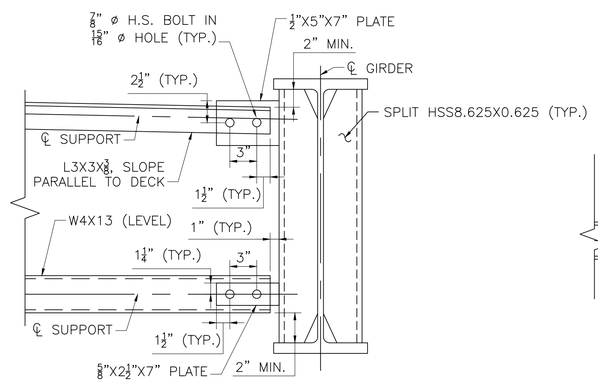

CONNECTION PLATE DETAIL C

SCALE: 1 1/2" = 1'-0"

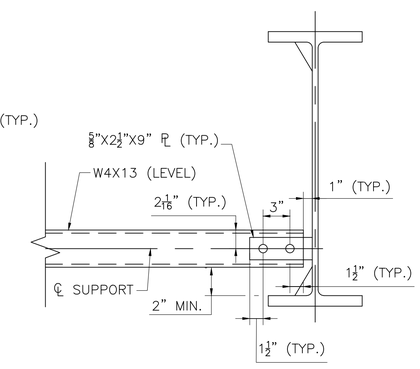

CONNECTION PLATE DETAIL D

SCALE: 1 1/2" = 1'-0"

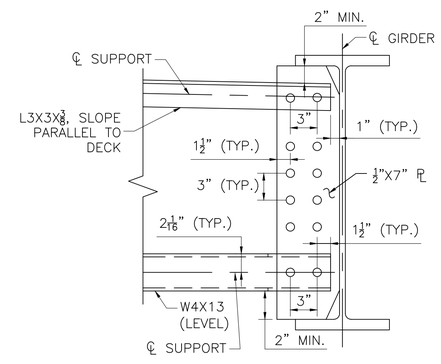

CONNECTION PLATE DETAIL E

SCALE: 1 1/2" = 1'-0"

NOTES:

1. FOR FRAMING PLAN, SEE SHEET 20.
2. FOR DIAPHRAGM DETAIL, SEE SHEET 28.
3. BETWEEN BEAMS 1 AND 2:
   5 INCH ELECTRICAL CONDUIT – RTRC
   FOR RELOCATED TELEPHONE UTILITY.
4. BETWEEN BEAMS 9 AND 10:
   3 INCH ELECTRICAL CONDUIT TYPE RM – GALVANIZED STEEL FOR RELOCATED TRAFFIC SIGNAL DETECTION LEAD-IN UTILITY.

DATE	DESCRIPTION
SEPT. 19, 2026	ISSUED FOR CONSTRUCTION

THIS SHEET IS APPROVED FOR CONSTRUCTION BY MASSDOT
AUTHORIZED SIGNATORY: STATE BRIDGE ENGINEER
USE ONLY PRINTS OF LATEST DATE

605323_BR_28-29(O06030)(DIA_DET).DWG Plotted on 3-Sep-2026 7:16 AM
02-September-2026
Final Structural Submittal (SF)

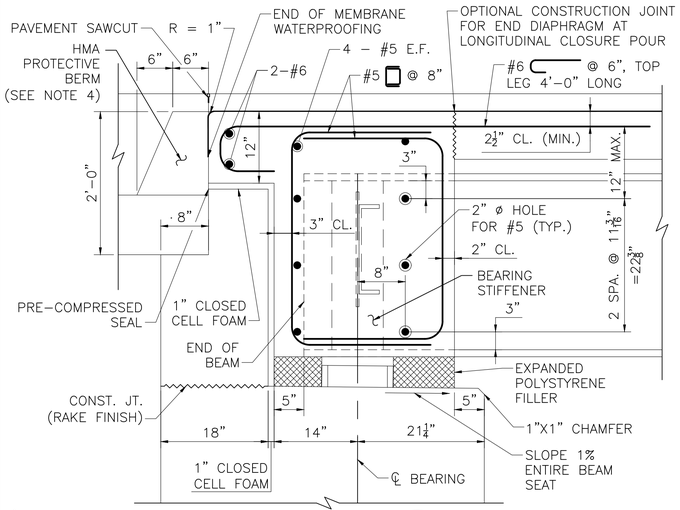

SECTION 24

SCALE: 1'–0" = 1'–0"

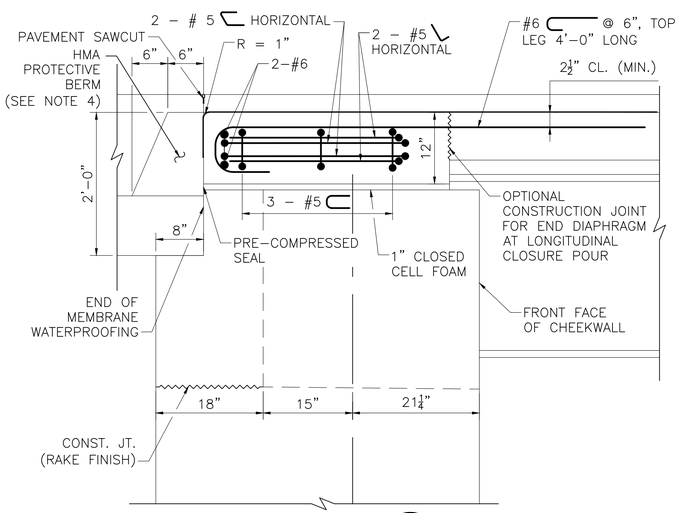

SECTION 23

SCALE: 1'–0" = 1'–0"

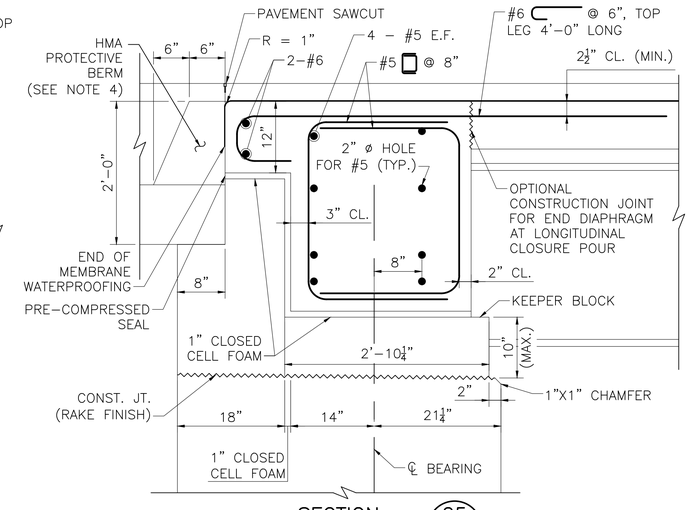

SECTION 25

SCALE: 1'–0" = 1'–0"

OXFORD
LEICESTER STREET/ST 56

STATE	FED. AID PROJ. NO.	SHEET NO.	TOTAL SHEETS
MA	HIP(NGB)-004S(015)X	55	66
PROJECT FILE NO.	605323		

END DIAPHRAGM DETAILS

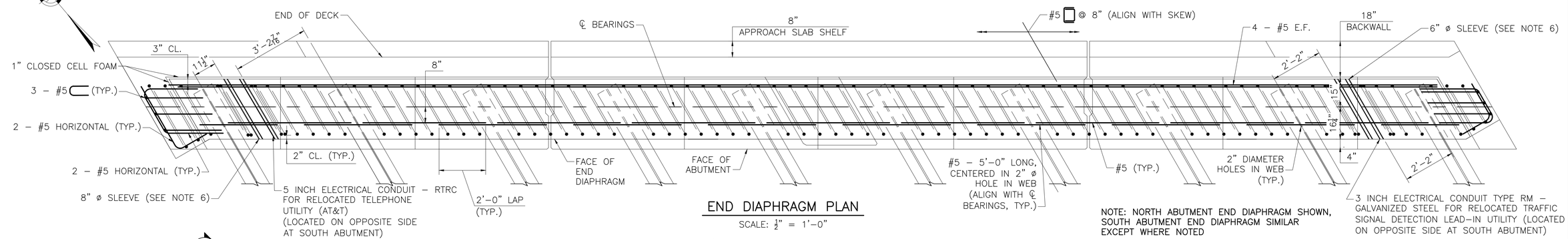

END DIAPHRAGM PLAN

SCALE: ½" = 1'–0"

NOTE: NORTH ABUTMENT END DIAPHRAGM SHOWN, SOUTH ABUTMENT END DIAPHRAGM SIMILAR EXCEPT WHERE NOTED

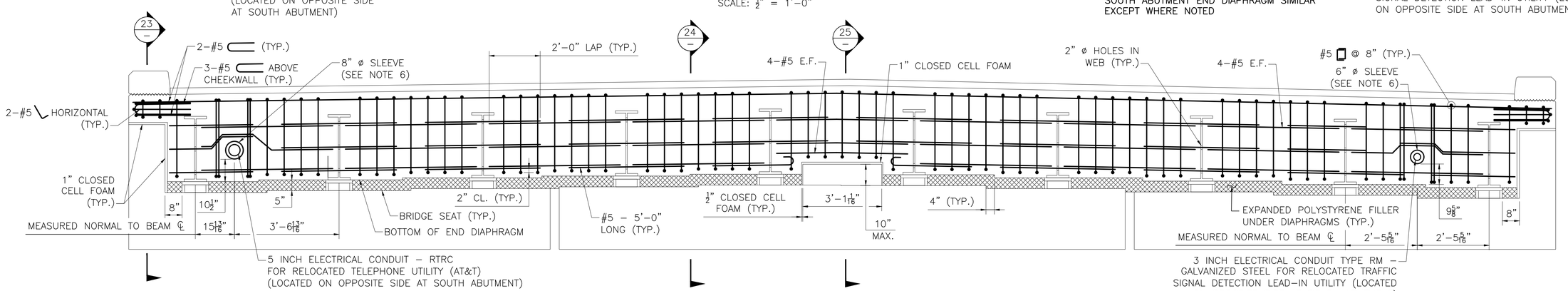

END DIAPHRAGM ELEVATION

SCALE: ½" = 1'–0"

NOTES:

1. ALL REINFORCEMENT SHALL BE COATED.
2. HMA PROTECTIVE BERM TO BE SUPERPAVE BRIDGE PROTECTIVE COURSE (SPC–B–12.5), PLACED IN 2" LAYERS AND COMPACTED WITH A MECHANICAL HAND–GUIDED TAMPER.
3. PRIOR TO PLACING END DIAPHRAGM CONCRETE, CLOSED CELL FOAM OF THE SPECIFIED THICKNESS SHALL BE ATTACHED WITH ADHESIVE TO ALL SURFACES OF THE BACKWALL, KEEPER BLOCKS, AND CURTAIN WALLS AS SHOWN ON THE CONSTRUCTION DRAWINGS. THE BOTTOM OF THE END DIAPHRAGM SHALL BE FORMED BY PLACING EXPANDED POLYSTYRENE FILLER OF THE REQUIRED THICKNESS ON THE BRIDGE SEAT AND TUCKING IT UNDER THE BEAM BOTTOM FLANGES. THE CONTRACTOR SHALL MAKE SURE THAT THE CLOSED CELL FOAM AND EXPANDED POLYSTYRENE FILLER HAVE BEEN PROPERLY AND SECURELY INSTALLED SO THAT THE END DIAPHRAGM CONCRETE SHALL NOT COME IN DIRECT CONTACT WITH THE ABUTMENT CONCRETE.
4. DECK SLAB REINFORCEMENT NOT SHOWN FOR CLARITY.
5. FOR PAVEMENT SAWCUT DETAIL, SEE SHEET 16.
6. UTILITY SLEEVES SHALL BE STEEL PIPE CONFORMING TO ASTM A 53, TYPE S, GRADE B, STANDARD WEIGHT, PLAIN ENDS, HOT–DIP GALVANIZED AND SHALL BE SET IN THE FORMS PRIOR TO PLACING ABUTMENT DIAPHRAGM CONCRETE. UTILITY SLEEVES SHALL BE CONSIDERED INCIDENTAL TO RESPECTIVE UTILITY CONDUITS.

SEPT. 19, 2026	ISSUED FOR CONSTRUCTION
DATE	DESCRIPTION
THIS SHEET IS APPROVED FOR CONSTRUCTION BY MASSDOT AUTHORIZED SIGNATORY:	STATE BRIDGE ENGINEER
USE ONLY PRINTS OF LATEST DATE	

605323_BR_30(006030)(END_DIA_DET).DWG Plotted on 3-Sep-2026 7:16 AM
02-September-2026
Final Structural Submittal (SF)

OXFORD
LEICESTER STREET/ST 56

STATE	FED. AID PROJ. NO.	SHEET NO.	TOTAL SHEETS
MA	HIP(NGB)-004S(015)X	56	66
PROJECT FILE NO.	605323		

BEARING DETAILS

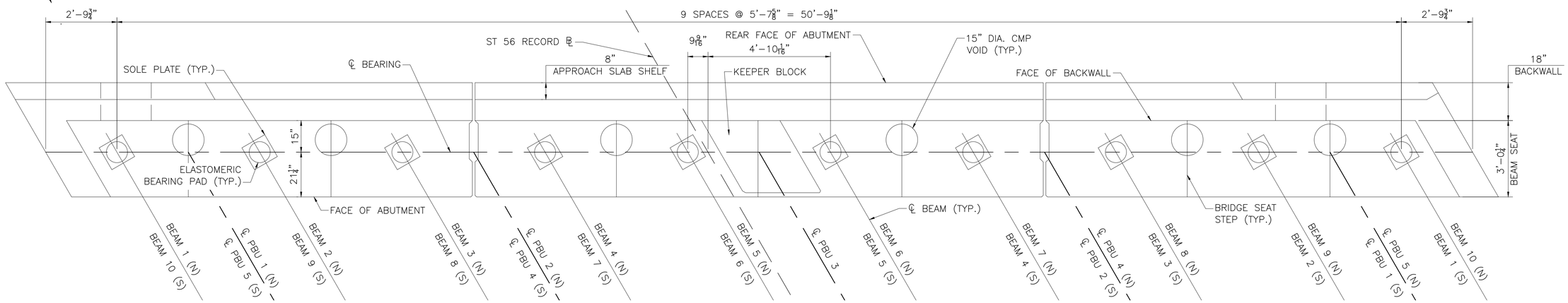

NOTE:
NORTH ABUTMENT SHOWN, SOUTH SIMILAR.
DIMENSIONS FROM ST 56 ℄ TO ADJACENT GIRDER ℄
BEARING POINTS REVERSED FOR SOUTH ABUTMENT.

BEARING LAYOUT

SCALE: ½" = 1'-0"

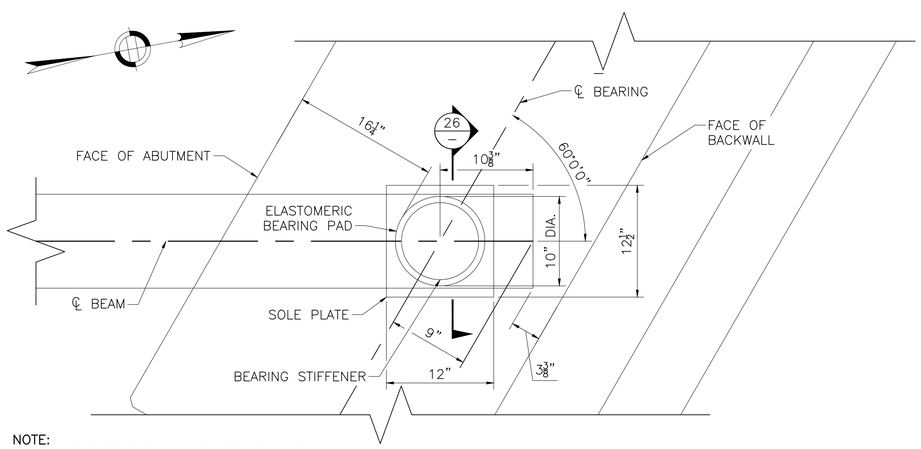

NOTE:
NORTH ABUTMENT SHOWN, SOUTH SIMILAR.

BEARING PAD PLAN

SCALE: 1½" = 1'-0"

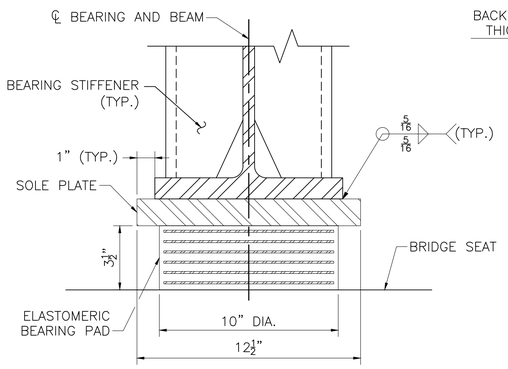

SECTION 26 / –

SCALE: 3" = 1'-0"

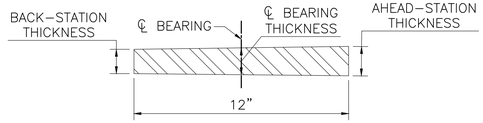

SOLE PLATE DETAIL

SCALE: 3" = 1'-0"

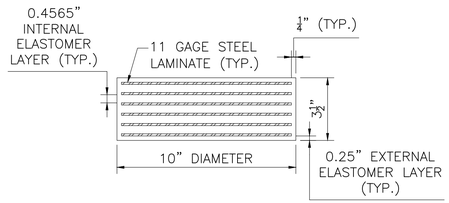

ELASTOMERIC BEARING PAD

SCALE: 3" = 1'-0"

SOLE PLATE THICKNESS TABLE			
BEARING	BACK-STATION THICKNESS (IN.)	℄ BEARING THICKNESS (IN.)	AHEAD-STATION THICKNESS (IN.)
SOUTH ABUTMENT	1.358	1.500	1.642
NORTH ABUTMENT	1.528	1.500	1.472

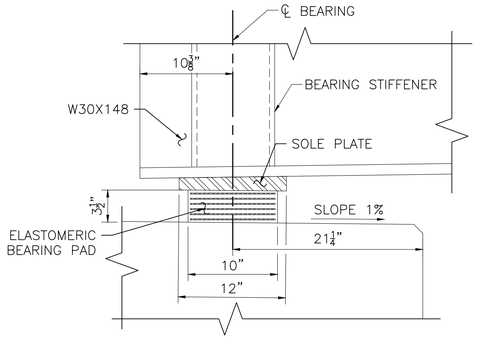

BEARING PAD ELEVATION

SCALE: 1½" = 1'-0"

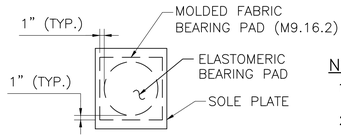

PLAN

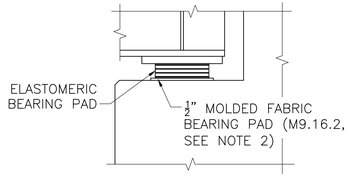

ELEVATION

SHIM STACK DETAILS

SCALE: ¾" = 1'-0"

NOTES:

1. MOLDED FABRIC BEARING PADS SHALL HAVE A MINIMUM COMPRESSIVE STRENGTH OF 7000 PSI.
2. THE ½" MOLDED FABRIC BEARING PAD IS PROVIDED AS A TOLERANCE TO ALLOW THE CONTRACTOR TO CORRECT FOR ANY PLUS/MINUS DIFFERENCES IN THE ELEVATION OF THE BRIDGE SEATS. THE CONTRACTOR SHALL SET THE PBU AT THE CORRECT ELEVATION IF NEEDED BY EITHER REMOVING THE ½" MOLDED FABRIC BEARING PAD AND REPLACING IT WITH A THINNER SHIM PAD OR BY ADDING ADDITIONAL SHIM PADS. THE TOTAL THICKNESS OF THE BUILT-UP MOLDED FABRIC BEARING SHIM PADS SHALL NOT EXCEED THREE LAYERS NOR 2" IN OVERALL COMBINED THICKNESS.

NOTES:

1. THIS BEARING IS DESIGNED USING AASHTO METHOD B.
2. ELASTOMER SHALL HAVE A SHEAR MODULUS OF 0.160 KSI.
3. STEEL LAMINATES SHALL CONFORM TO ASTM A 1011 GRADE 36 OR HIGHER. ALL EDGES OF STEEL LAMINATES SHALL BE GROUND SMOOTH.
4. THE COMPRESSIVE DESIGN LOAD ON THE BEARING PAD IS 104.01 KIPS. THE COMPRESSIVE DESIGN STRESS IS THE RESULT OF DIVIDING THE COMPRESSIVE DESIGN LOAD BY THE AREA OF THE PAD AND IS EQUAL TO 1.324 KSI.
5. THE 25 YEAR CREEP STRAIN SHALL BE LIMITED TO 35%.
6. ELASTOMERIC BEARING PAD SHALL NOT BE VULCANIZED TO THE SOLE PLATE.
7. STEEL SOLE PLATE SHALL CONFORM TO AASHTO M 270 GRADE 36 OR GRADE 50 AND SHALL BE HOT-DIP GALVANIZED OR METALIZED.
8. CENTER THE ELASTOMERIC PAD UNDER THE SOLE PLATE DURING BEAM ERECTION.
9. BEAMS SHALL BE ERECTED WHEN THE AMBIENT TEMPERATURE IS BETWEEN 30 °F AND 90 °F. IF BEAMS ARE ERECTED AT OTHER AMBIENT TEMPERATURES, THEY WILL HAVE TO BE JACKED AND THE ELASTOMERIC BEARINGS RECENTERED WHEN THE TEMPERATURE RETURNS TO THAT RANGE.

DATE	DESCRIPTION
SEPT. 19, 2026	ISSUED FOR CONSTRUCTION

THIS SHEET IS APPROVED FOR CONSTRUCTION BY MASSDOT AUTHORIZED SIGNATORY: STATE BRIDGE ENGINEER

USE ONLY PRINTS OF LATEST DATE

605323_BR_31(O06030)(BEARING_DET).DWG Plotted on 3-Sep-2026 7:16 AM
Final Structural Submittal (SF) 02-September-2026

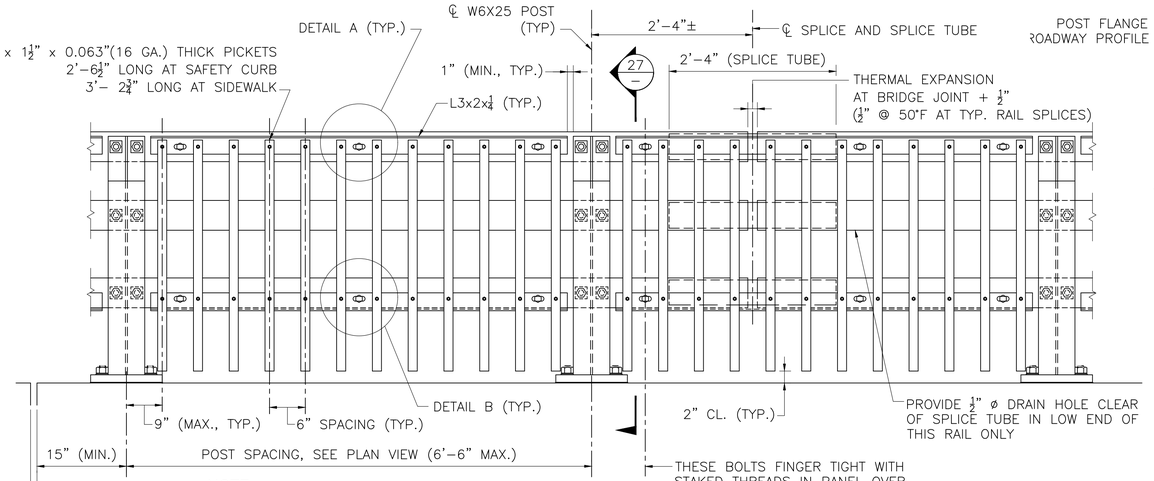

NOTE:
ELEVATION AT SIDEWALK SHOWN. ELEVATION AT SAFETY CURB SIMILAR, EXCEPT AS NOTED.

BRIDGE RAILING ELEVATION

SCALE: 1" = 1'-0"

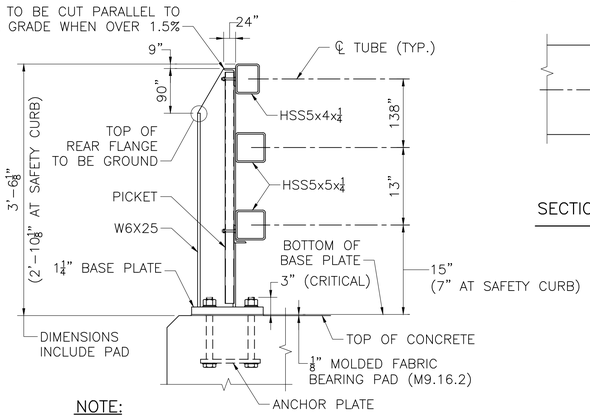

NOTE:
SECTION AT SIDEWALK SHOWN. SECTION AT SAFETY CURB SIMILAR, EXCEPT AS NOTED.

SECTION 27

SCALE: 1" = 1'-0"

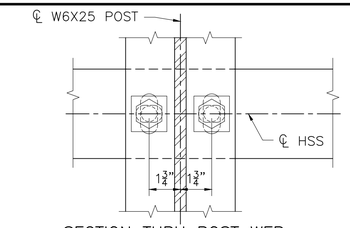

SECTION THRU POST WEB

OXFORD
LEICESTER STREET/ST 56

STATE	FED. AID PROJ. NO.	SHEET NO.	TOTAL SHEETS
MA	HIP(NGB)-004S(015)X	57	66
PROJECT FILE NO.	605323		

S3-MTL4 BRIDGE RAILING DETAILS 1 OF 2

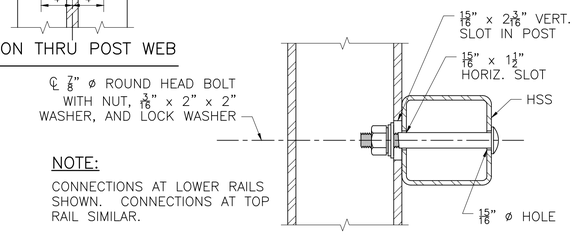

NOTE:
CONNECTIONS AT LOWER RAILS SHOWN. CONNECTIONS AT TOP RAIL SIMILAR.

SECTION THRU RAIL

TYPICAL RAIL TO POST CONNECTIONS

SCALE: 3" = 1'-0"

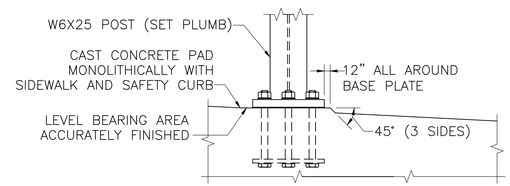

SETTING OF POSTS (PROFILE GRADE OVER 1.5%)

SCALE: 1" = 1'-0"

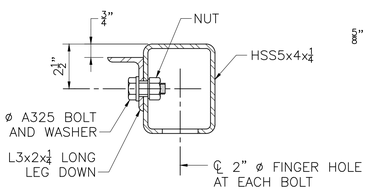

SECTION 28

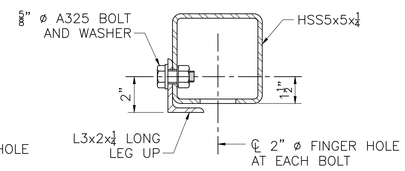

SECTION 30

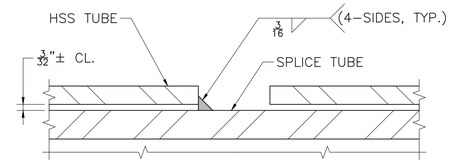

SPLICE DETAIL

SCALE: 1'-0" = 1'-0"

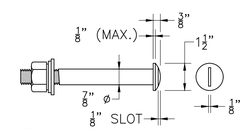

⅞" ø ROUND HEAD BOLT

SCALE: 3" = 1'-0"

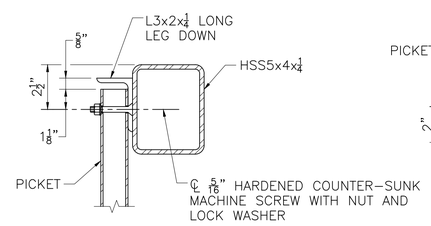

SECTION 29

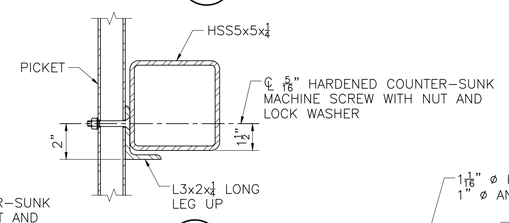

SECTION 31

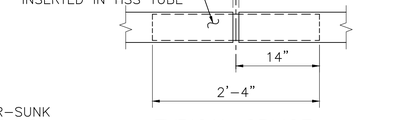

TYPICAL SPLICE

SCALE: 1" = 1'-0"

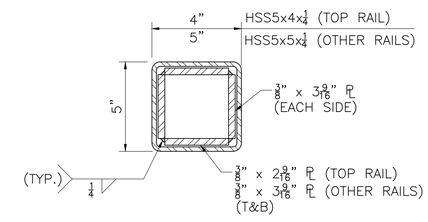

SPLICE TUBE DETAILS

SCALE: 3" = 1'-0"

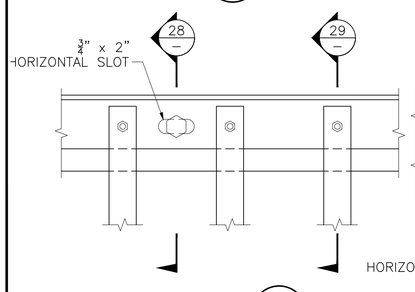

DETAIL A

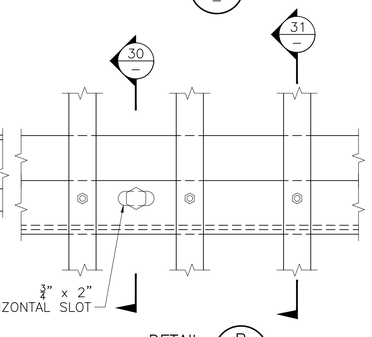

DETAIL B

TYPICAL PICKET TO RAIL DETAILS

SCALE: 3" = 1'-0"

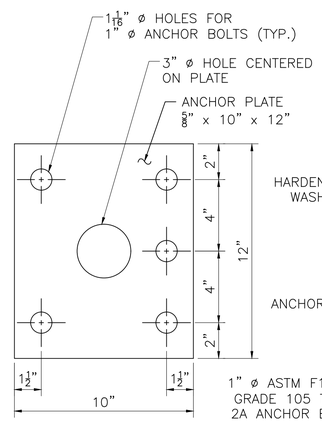

ANCHOR PLATE

SCALE: 3" = 1'-0"

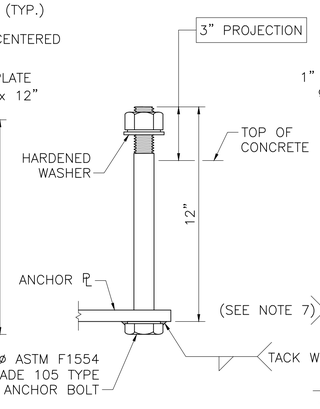

ANCHOR BOLT

SCALE: 3" = 1'-0"

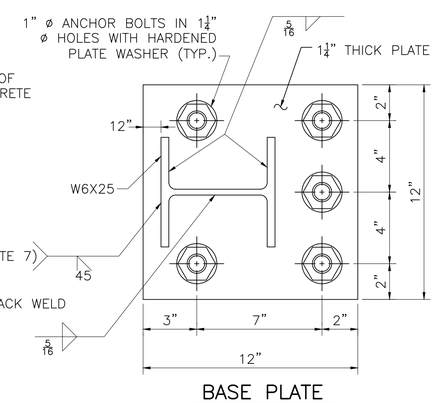

BASE PLATE

SCALE: 3" = 1'-0"

RAILING NOTES:

1. RAIL POST AND BASE PLATES SHALL CONFORM TO THE REQUIREMENTS OF AASHTO M 270 GRADE 50. HOLLOW RAILING STRUCTURAL TUBING (HSS) SHALL CONFORM TO THE REQUIREMENTS OF ASTM A 500 WITH A CERTIFIED Fy = 50 KSI MINIMUM. THE MINIMUM HORIZONTAL BENDING RADII OF THE HSS TUBING SHALL BE 8 FEET. PICKET CARRIER ANGLES, ANCHOR PLATES, AND SPLICE TUBE PLATES SHALL CONFORM TO THE REQUIREMENTS OF AASHTO M 270 GRADE 36. PICKET TUBING SHALL CONFORM TO ASTM A 513 WITH Fy = 36 KSI MIN. OR A 500 GRADE B.
2. ALL STEEL (EXCEPT THE ⅝" ANCHOR PLATE AND FASTENERS) SHALL BE GALVANIZED AND PAINTED DARK BRONZE (FEDERAL STD. 595B COLOR NO. 10045). ANCHOR PLATE SHALL BE GALVANIZED ONLY. HEADS OF ⅞" ø ROUND HEAD BOLTS SHALL BE PAINTED TO MATCH RAIL.
3. ANCHOR BOLTS SHALL BE SET WITH TEMPLATES. THE NUT SECURING THE POST BASE PLATE TO THE CONCRETE SHALL BE TIGHTENED TO A SNUG FIT AND GIVEN AN ADDITIONAL 1/8 TURN AFTER STEEL IS IN PLACE.
4. RAILS SHALL BE CONTINUOUS OVER A MINIMUM OF FOUR (4) POSTS WITHOUT SPLICES WHERE POSSIBLE. IN ADDITION SPLICES SHALL ALSO BE LOCATED IN RAILS OVER BRIDGE EXPANSION JOINTS.
5. ENDS OF TUBE SECTIONS SHALL BE SAWED. GRIND SMOOTH EXPOSED EDGES. ALL CUT ENDS SHALL BE TRUE AND SMOOTH.
6. ALL POSTS TO BE PLUMB WHEN PROFILE GRADE EXCEEDS 1.5%. FOR PROFILE GRADES LESS THAN 1.5%, POSTS SHALL BE SET PERPENDICULAR TO GRADE.
7. POST TO FLANGE WELD DOES NOT REQUIRE MAGNETIC PARTICLE TESTING. BEVEL OUTSIDE FLANGES OF POST. FIT POST TO BASE PLATE. WELD 5/16" FILLET ON INSIDE OF FLANGE AND WEB. BACKGOUGE OUTSIDE OF FLANGE TO SOUND METAL. COMPLETE GROOVE WELD WITH MINIMUM OF ⅛" REINFORCEMENT. WELD IS THE SAME ON BOTH FLANGES.
8. ⅞" ø ROUND HEAD BOLTS SHALL CONFORM TO THE CHEMICAL AND PHYSICAL REQUIREMENTS OF ASTM F3125 GRADE 325 TYPE 1 GALVANIZED.

DATE	DESCRIPTION
SEPT. 19, 2026	ISSUED FOR CONSTRUCTION

THIS SHEET IS APPROVED FOR CONSTRUCTION BY MASSDOT
AUTHORIZED SIGNATORY: STATE BRIDGE ENGINEER

USE ONLY PRINTS OF LATEST DATE

605323_BR_32-33(O06030)(RAIL_DET).DWG Plotted on 3-Sep-2026 7:16 AM
02-September-2026
Final Structural Submittal (SF)

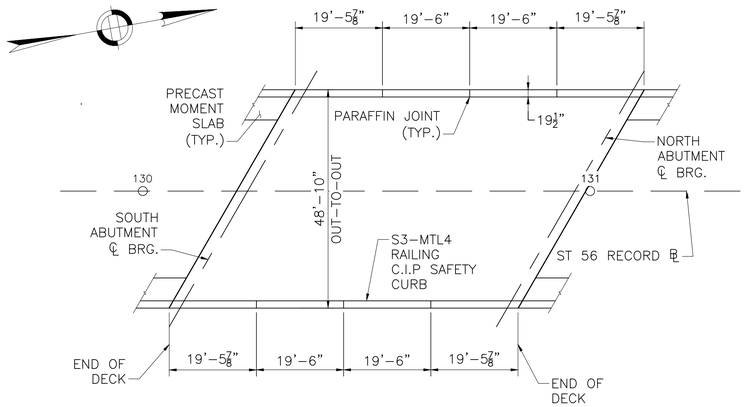

PARAFFIN JOINT SPACING PLAN

SCALE: 1/16" = 1'-0"

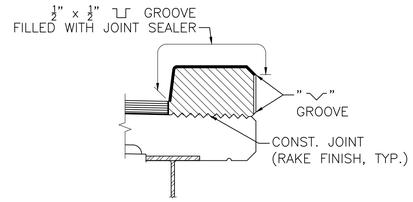

PARAFFIN JOINT AT SAFETY CURB

SCALE: 3/4" = 1'-0"

PARAFFIN JOINT NOTES:

1. ALL CONCRETE ABOVE SLAB SHALL BE POURED IN ALTERNATING SECTIONS WITH NOT LESS THAN 3 DAYS BETWEEN POURS.
2. DO NOT CARRY LONGITUDINAL BARS THROUGH THE PARAFFIN JOINTS. END THE REINFORCEMENT 2" CLEAR OF JOINT.
3. JOINT SHALL BE SQUARE TO FACE OF CURB.

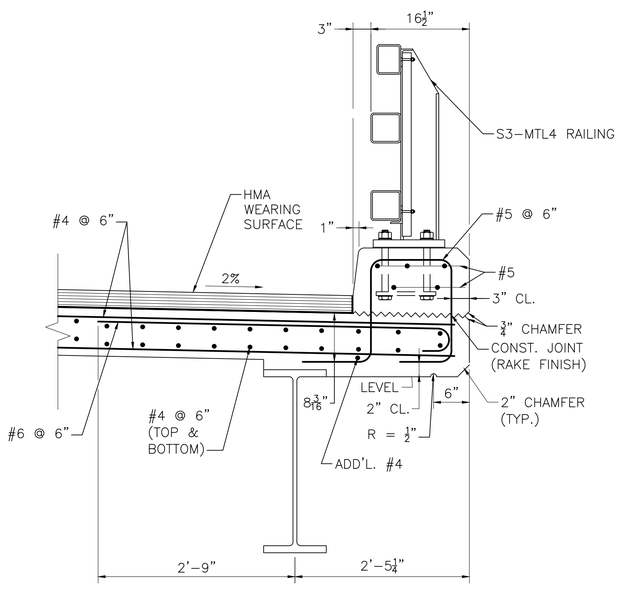

S3-MTL4 RAILING AT EXTERIOR BEAM

SCALE: 1" = 1'-0"

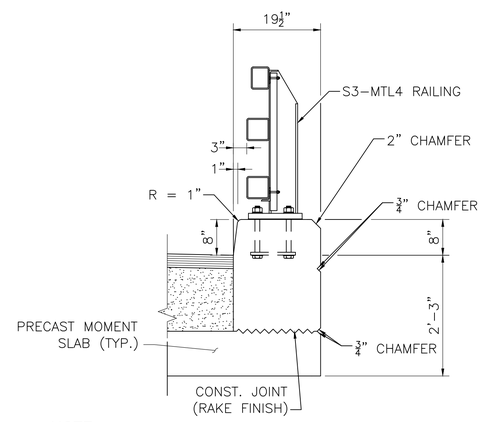

NOTE:

FOR REINFORCEMENT OF RAILING ON MOMENT SLAB, SEE MOMENT SLAB DETAILS, SHEET 18

S3-MTL4 RAILING SECTION AT MOMENT SLAB

SCALE: 3/4" = 1'-0"

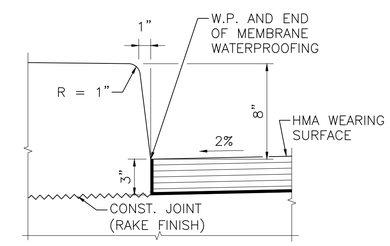

FACE OF SAFETY CURB DETAILS

SCALE: 1" = 1'-0"

SEPT. 19, 2026	ISSUED FOR CONSTRUCTION
DATE	DESCRIPTION

THIS SHEET IS APPROVED FOR CONSTRUCTION BY MASSDOT
AUTHORIZED SIGNATORY: STATE BRIDGE ENGINEER

USE ONLY PRINTS OF LATEST DATE

605323_BR_32-33(O06030)(RAIL_DET).DWG Plotted on 3-Sep-2026 7:16 AM
02-September-2026
Final Structural Submittal (SF)

OXFORD
LEICESTER STREET/ST 56

STATE	FED. AID PROJ. NO.	SHEET NO.	TOTAL SHEETS
MA	HIP(NGB)-004S(015)X	59	66
PROJECT FILE NO.	605323		

PRECAST HIGHWAY GUARDRAIL TRANSITION DETAILS 1 OF 2

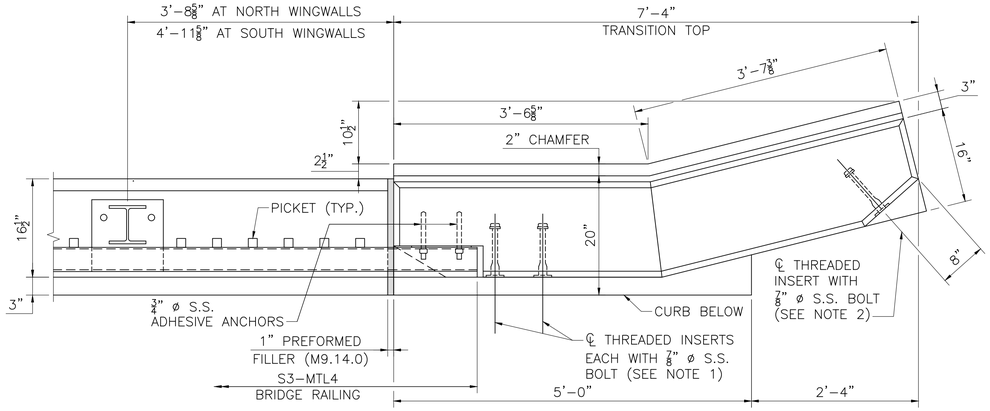

PLAN AT SAFETY CURB

SCALE: 1" = 1'-0"

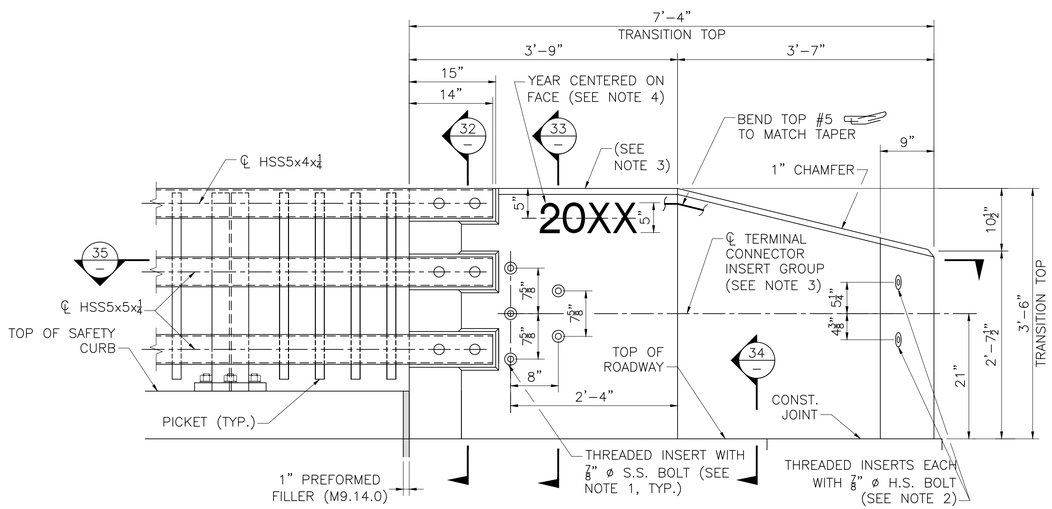

ELEVATION AT SAFETY CURB

SCALE: 1" = 1'-0"

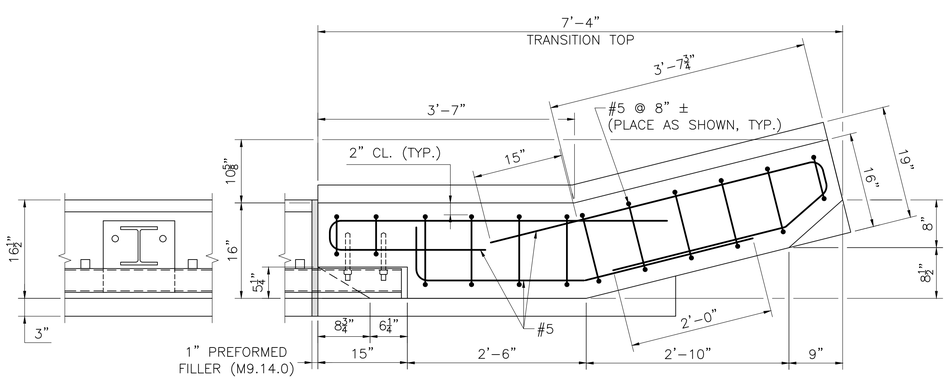

SECTION 35

SCALE: 1" = 1'-0"

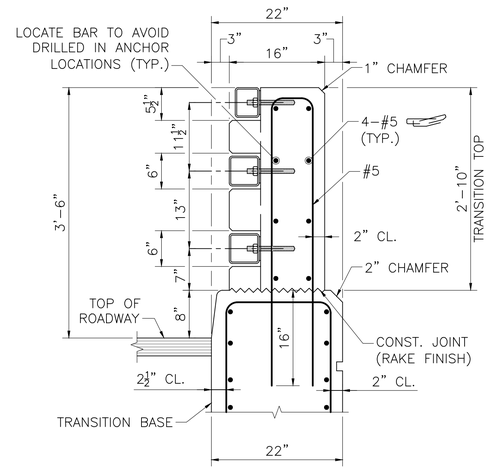

SECTION 32

SCALE: 1" = 1'-0"

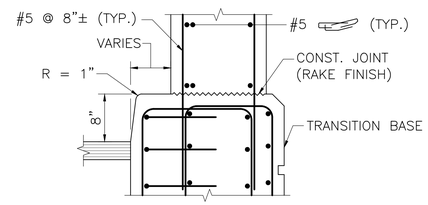

SECTION 34

SCALE: 1" = 1'-0"

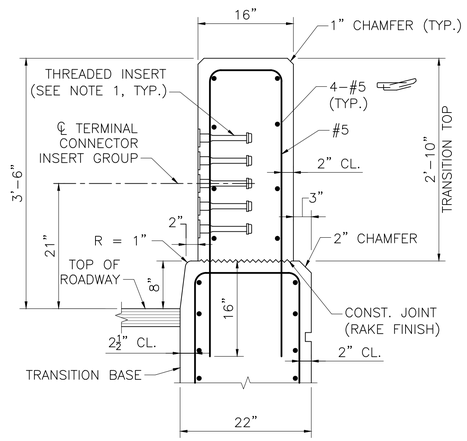

SECTION 33

SCALE: 1" = 1'-0"

NOTES:

1. THREADED INSERTS SHALL BE PREQUALIFIED BY THE MANUFACTURER AS BEING CAPABLE OF DEVELOPING A NOMINAL SHEAR RESISTANCE OF 20 KIPS PER ⅞" ø S.S. (STAINLESS STEEL) BOLT. S.S. BOLTS SHALL BE ⅞" ø x 1½" LONG FULLY THREADED CONFORMING TO ASTM F593D WITH AISI TYPE 304N S.S. WASHERS. INSERTS FOR ⅞" S.S. BOLTS SHALL BE GALVANIZED AND CAST INTO THE TRANSITION.
2. ⅞" ø HIGH STRENGTH BOLTS SHALL CONFORM TO THE REQUIREMENTS OF ASTM F3125 AND BE GALVANIZED. USE ADDITIONAL WASHERS AS REQUIRED TO PROPERLY ENGAGE THE BOLTS.
3. FOR AN APPROACH GRADE UP TO 3%, THE TRANSITION MAY BE CAST SQUARE AND SET PLUMB WITH THE MINIMUM EMBEDMENT DEPTH SHOWN. THE TERMINAL CONNECTOR INSERT GROUP SHALL BE SQUARE TO THE POST.
4. USE LATEST CONTRACT COMPLETION YEAR IN EFFECT WHEN THE FIRST GUARDRAIL TRANSITION IS CAST. USE THIS YEAR FOR ALL GUARDRAIL TRANSITIONS.
5. ALL CONCRETE FOR THE PRECAST HIGHWAY GUARDRAIL TRANSITION SHALL BE 5000 HP CEMENT CONCRETE.
6. LIFTING DEVICES (NOT SHOWN), INCLUDING THEIR NUMBER AND LOCATION, SHALL BE DESIGNED AND DETAILED BY THE PRECASTER. THEY SHALL BE GALVANIZED AND SHALL BE PLACED AND RECESSED IN POCKETS TO PROVIDE 1½" CLEAR COVER TO THE FACE OF THE TRANSITION CONCRETE. THESE DEVICES SHALL BE CLEARLY SHOWN ON THE SHOP DRAWINGS ALONG WITH ALL SUPPORTING CALCULATIONS AND/OR CATALOG CUTS. ONCE THE PRECAST TRANSITION IS SET IN PLACE, THE LIFTING DEVICE POCKETS SHALL BE FILLED WITH A NON-SHRINK GROUT THAT MATCHES THE COLOR OF THE TRANSITION CONCRETE WHEN CURED AND THE FILLED POCKETS SHALL BE RUBBED WITH A CORUNDUM STONE TO BLEND OUT THE JOINTS.

DATE	DESCRIPTION
SEPT. 19, 2026	ISSUED FOR CONSTRUCTION

THIS SHEET IS APPROVED FOR CONSTRUCTION BY MASSDOT
AUTHORIZED SIGNATORY: STATE BRIDGE ENGINEER

USE ONLY PRINTS OF LATEST DATE

605323_BR_34-35(006030)(PHGT_DET).DWG Plotted on 3-Sep-2026 7:16 AM
02-September-2026
Final Structural Submittal (SF)

OXFORD
LEICESTER STREET/ST 56

STATE	FED. AID PROJ. NO.	SHEET NO.	TOTAL SHEETS
MA	HIP(NGB)-004S(015)X	60	66
PROJECT FILE NO.	605323		

PRECAST HIGHWAY GUARDRAIL TRANSITION DETAILS 2 OF 2

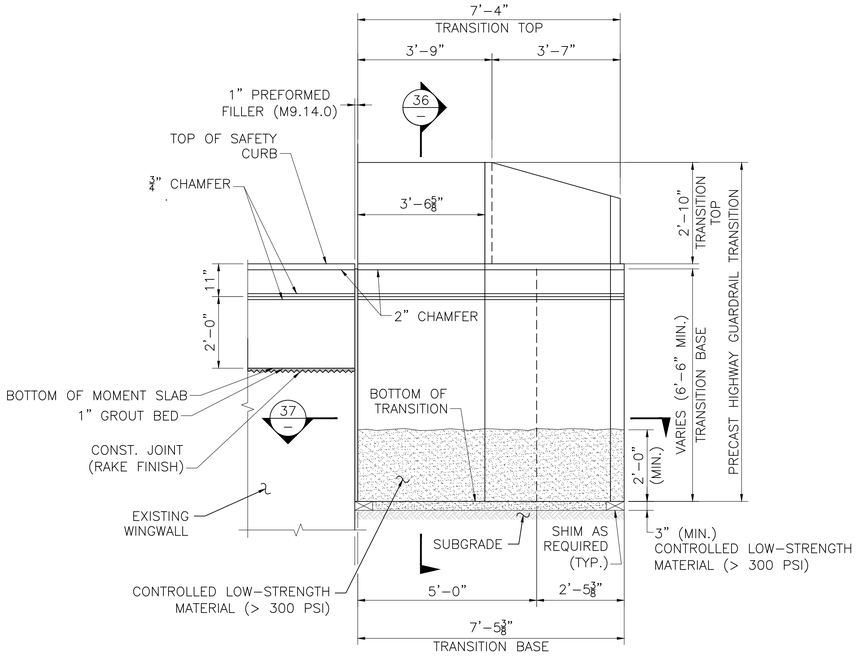

PRECAST GUARDRAIL TRANSITION
ELEVATION AT U-WINGWALL
SCALE: 1/2" = 1'-0"

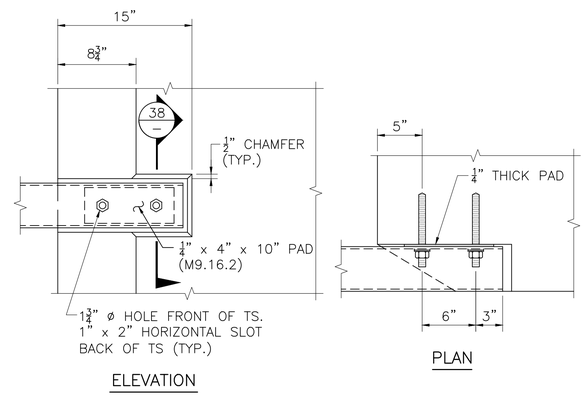

RAIL ATTACHMENT
SCALE: 1 1/2" = 1'-0"

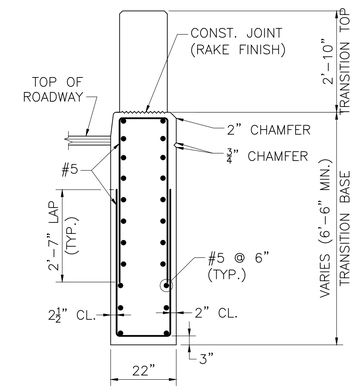

SECTION 36
SCALE: 1/2" = 1'-0"

NOTES:

1. REINFORCEMENT OF THE TRANSITION TOP IS NOT SHOWN FOR CLARITY.
2. WINGWALL REINFORCEMENT AND STRIATIONS NOT SHOWN FOR CLARITY.
3. THE SOIL SHALL BE EXCAVATED TO THE GRADE OF 3" (MIN.) BELOW THE INTENDED BOTTOM OF THE GUARDRAIL TRANSITION BASE AND TO A HEIGHT OF 2'-0" (MIN.) ON ALL SIDES OF THE TRANSITION BASE TO FORM A TRENCH IN WHICH TO SET THE TRANSITION.
4. CONTRACTOR SHALL SET THE PRECAST GUARDRAIL TRANSITION TO THE REQUIRED ELEVATION AND ALIGNMENT, AND BACKFILL GUARDRAIL TRANSITION WITH CONTROLLED LOW-STRENGTH MATERIAL (> 300 PSI) TO THE ELEVATION SHOWN.
5. BACKFILL THE REMAINDER OF EXCAVATION WITH GRAVEL BORROW, WHICH SHALL BE THOROUGHLY COMPACTED IN 12" LIFTS.
6. FOR PRECAST HIGHWAY GUARDRAIL TRANSITION BASE ELEVATIONS, SEE SHEET 17.

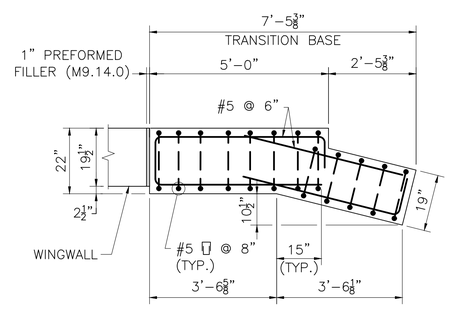

SECTION 37
SCALE: 1/2" = 1'-0"

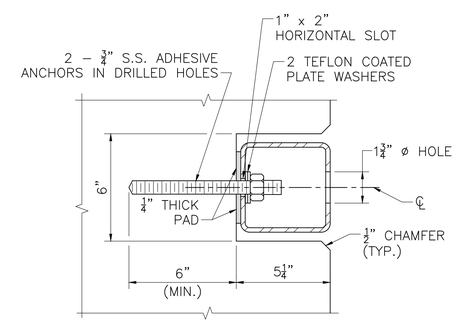

SECTION 38
SCALE: 3" = 1'-0"

DATE	DESCRIPTION
SEPT. 19, 2026	ISSUED FOR CONSTRUCTION

THIS SHEET IS APPROVED FOR CONSTRUCTION BY MASSDOT
AUTHORIZED SIGNATORY: STATE BRIDGE ENGINEER
USE ONLY PRINTS OF LATEST DATE

605323_BR_34-35(O06030)(PHGT_DET).DWG Plotted on 3-Sep-2026 7:16 AM
Final Structural Submittal (SF) 02-September-2026

OXFORD
LEICESTER STREET/RT 56

STATE	FED. AID PROJ. NO.	SHEET NO.	TOTAL SHEETS
MA	HIP(NGB)-004S(015)X	61	66
PROJECT FILE NO.	605323		

CROSS SECTIONS

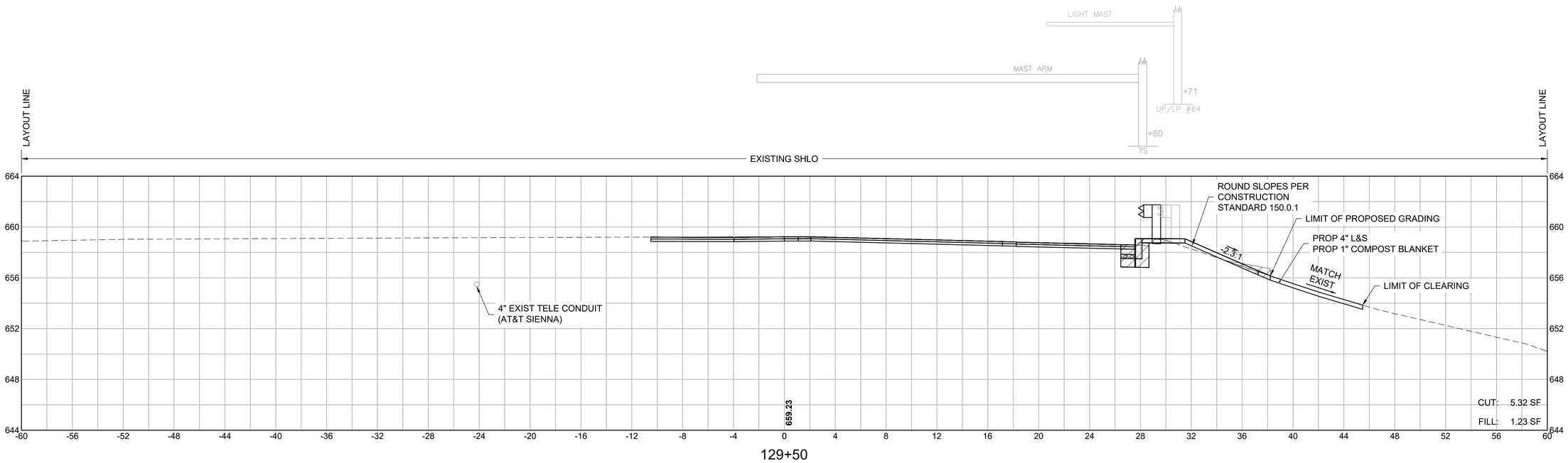

129+50

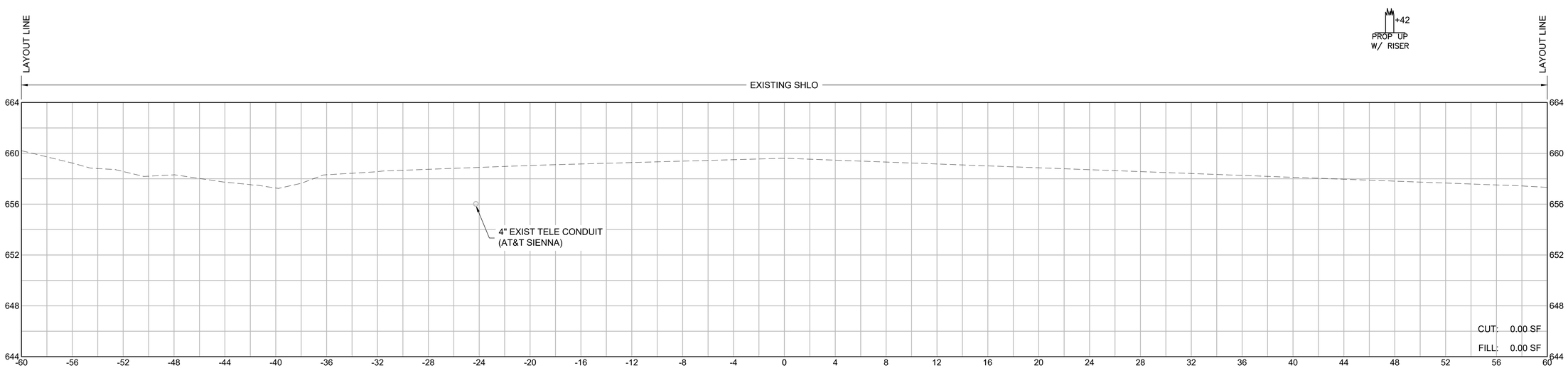

129+00.44

HOR. SCALE IN FEET
4 0 4 8
4 0 4 8
VER. SCALE IN FEET

NOTES

1. PROPOSED CONDUIT LOCATION SHOWN IS APPROXIMATE. COORDINATE WITH AT&T PRIOR TO CONSTRUCTION.
2. TELEPHONE MANHOLE LOCATIONS WERE PROVIDED BY AT&T AND ARE CONCEPTUAL. FINAL LOCATIONS TO BE DETERMINED BY AT&T IN COORDINATION WITH THE ENGINEER.

605323_HD(CROSSSECTIONS).DWG Plotted on 3-Sep-2026 8:46 AM

OXFORD
LEICESTER STREET/RT 56

STATE	FED. AID PROJ. NO.	SHEET NO.	TOTAL SHEETS
MA	HIP(NGB)-004S(015)X	62	66
PROJECT FILE NO.	605323		

CROSS SECTIONS

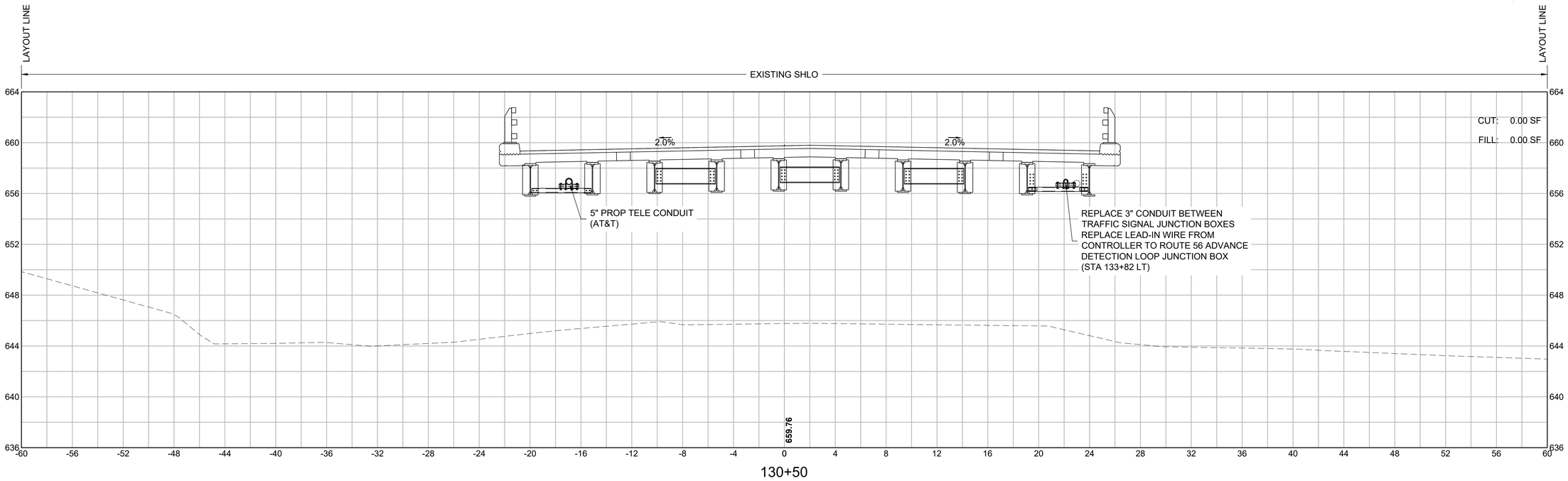

130+50

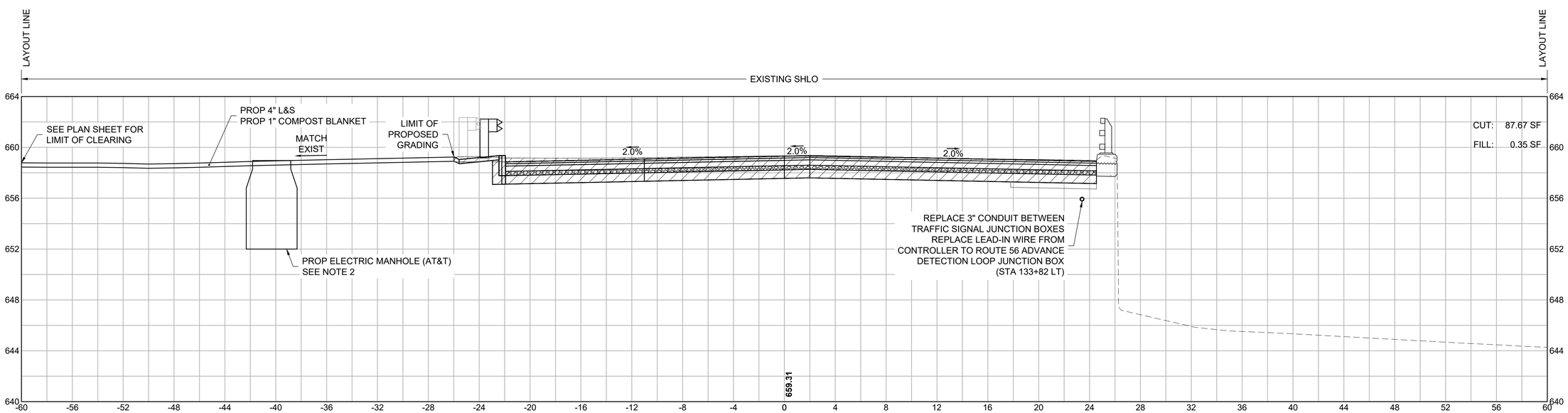

130+00

HOR. SCALE IN FEET
4 0 4 8
4 0 4 8
VER. SCALE IN FEET

NOTES

1. PROPOSED CONDUIT LOCATION SHOWN IS APPROXIMATE. COORDINATE WITH AT&T PRIOR TO CONSTRUCTION.
2. TELEPHONE MANHOLE LOCATIONS WERE PROVIDED BY AT&T AND ARE CONCEPTUAL. FINAL LOCATIONS TO BE DETERMINED BY AT&T IN COORDINATION WITH THE ENGINEER.

605323_HD(CROSSSECTIONS).DWG Plotted on 3-Sep-2026 8:47 AM

OXFORD
LEICESTER STREET/RT 56

STATE	FED. AID PROJ. NO.	SHEET NO.	TOTAL SHEETS
MA	HIP(NGB)-004S(015)X	63	66
PROJECT FILE NO.	605323		

CROSS SECTIONS

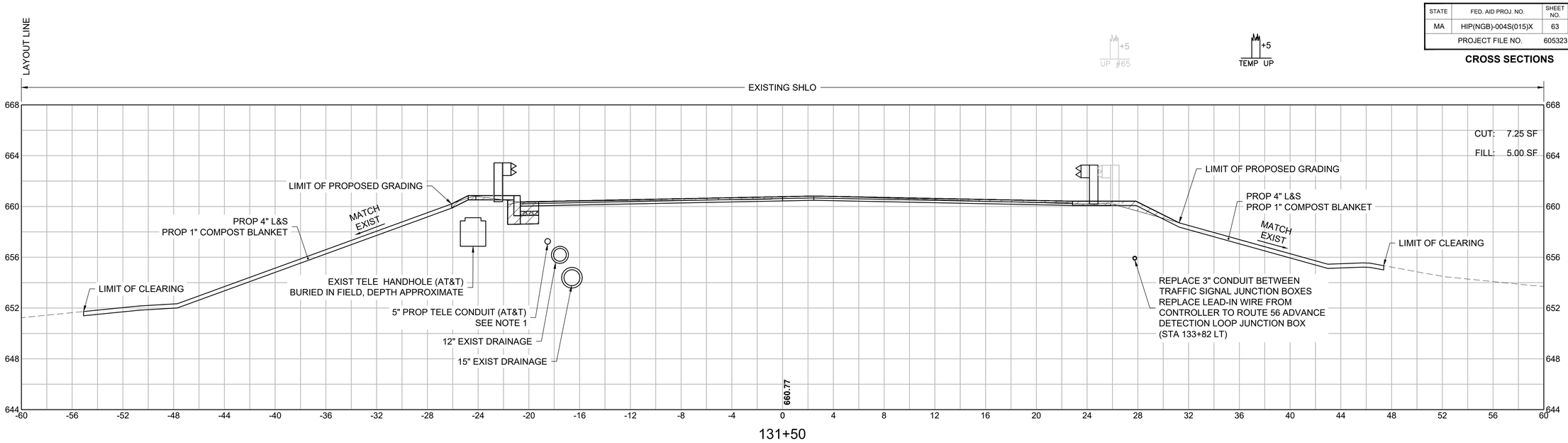

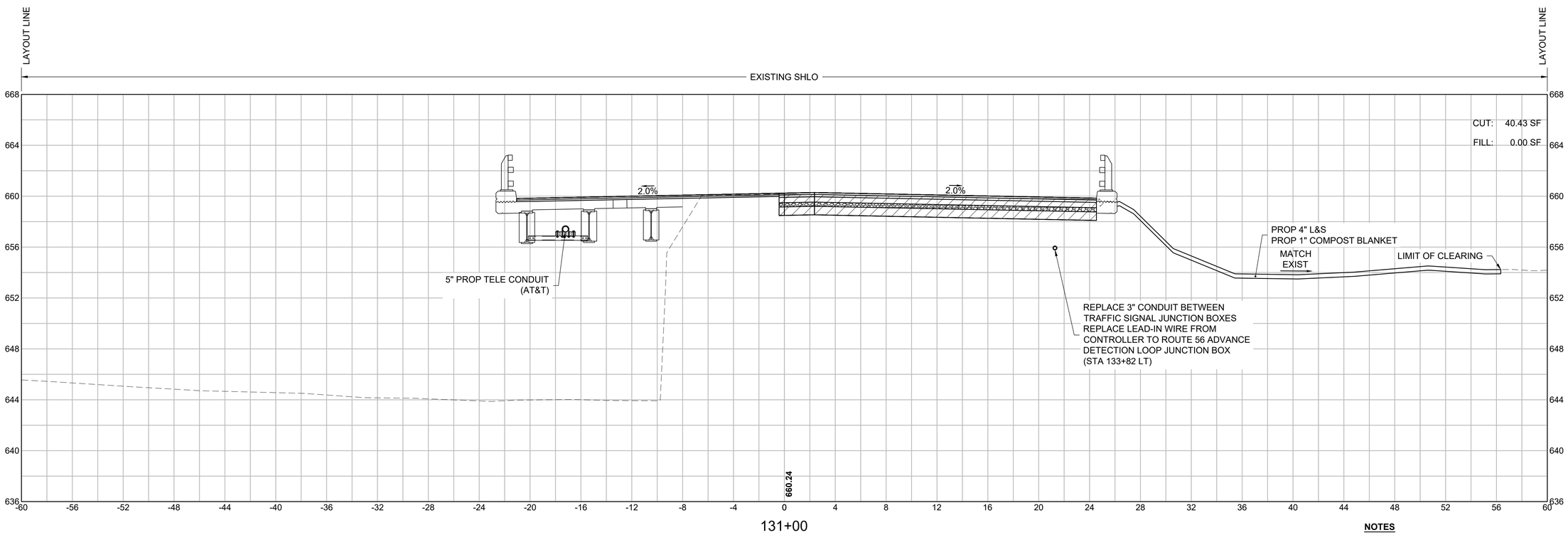

HOR. SCALE IN FEET
4 0 4 8
4 0 4 8
VER. SCALE IN FEET

NOTES

1. PROPOSED CONDUIT LOCATION SHOWN IS APPROXIMATE. COORDINATE WITH AT&T PRIOR TO CONSTRUCTION.
2. TELEPHONE MANHOLE LOCATIONS WERE PROVIDED BY AT&T AND ARE CONCEPTUAL. FINAL LOCATIONS TO BE DETERMINED BY AT&T IN COORDINATION WITH THE ENGINEER.

605323_HD(CROSSSECTIONS).DWG Plotted on 3-Sep-2026 8:47 AM

OXFORD
LEICESTER STREET/RT 56

STATE	FED. AID PROJ. NO.	SHEET NO.	TOTAL SHEETS
MA	HIP(NGB)-004S(015)X	64	66
PROJECT FILE NO.	605323		

CROSS SECTIONS

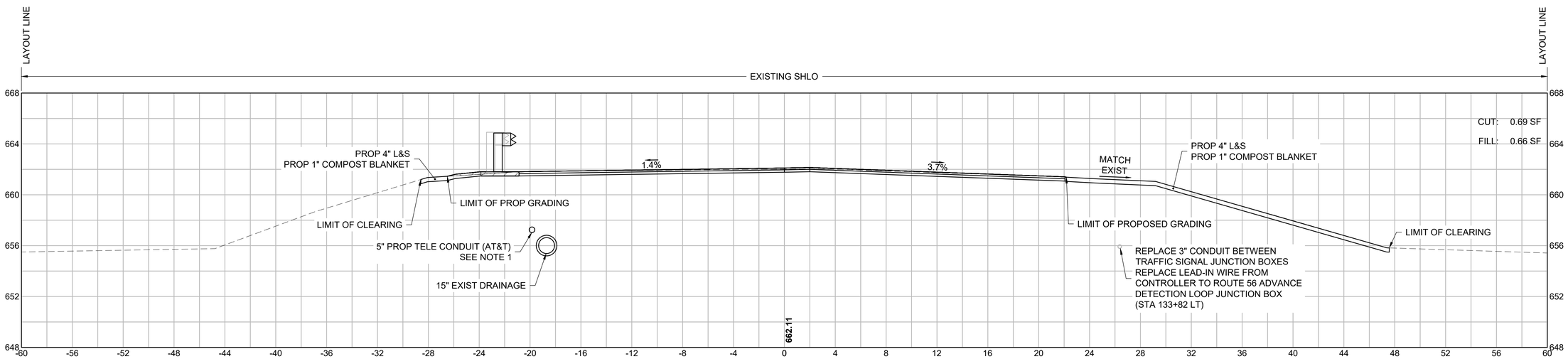

132+50

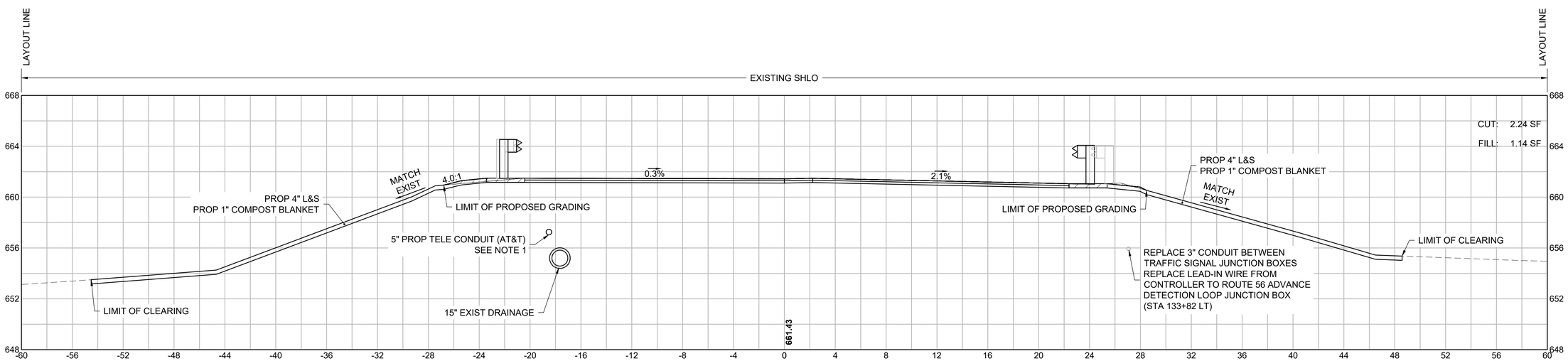

132+00

HOR. SCALE IN FEET
4 0 4 8
4 0 4 8
VER. SCALE IN FEET

NOTES

1. PROPOSED CONDUIT LOCATION SHOWN IS APPROXIMATE. COORDINATE WITH AT&T PRIOR TO CONSTRUCTION.
2. TELEPHONE MANHOLE LOCATIONS WERE PROVIDED BY AT&T AND ARE CONCEPTUAL. FINAL LOCATIONS TO BE DETERMINED BY AT&T IN COORDINATION WITH THE ENGINEER.

605323_HD(CROSSSECTIONS).DWG Plotted on 3-Sep-2026 8:47 AM

OXFORD
LEICESTER STREET/RT 56

STATE	FED. AID PROJ. NO.	SHEET NO.	TOTAL SHEETS
MA	HIP(NGB)-004S(015)X	65	66
PROJECT FILE NO.	605323		

CROSS SECTIONS

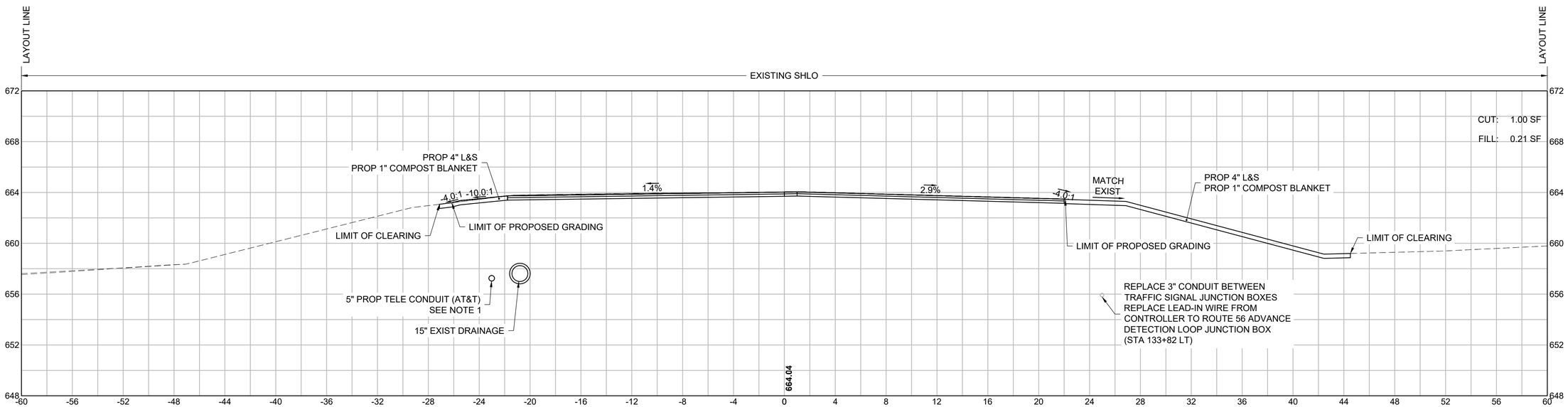

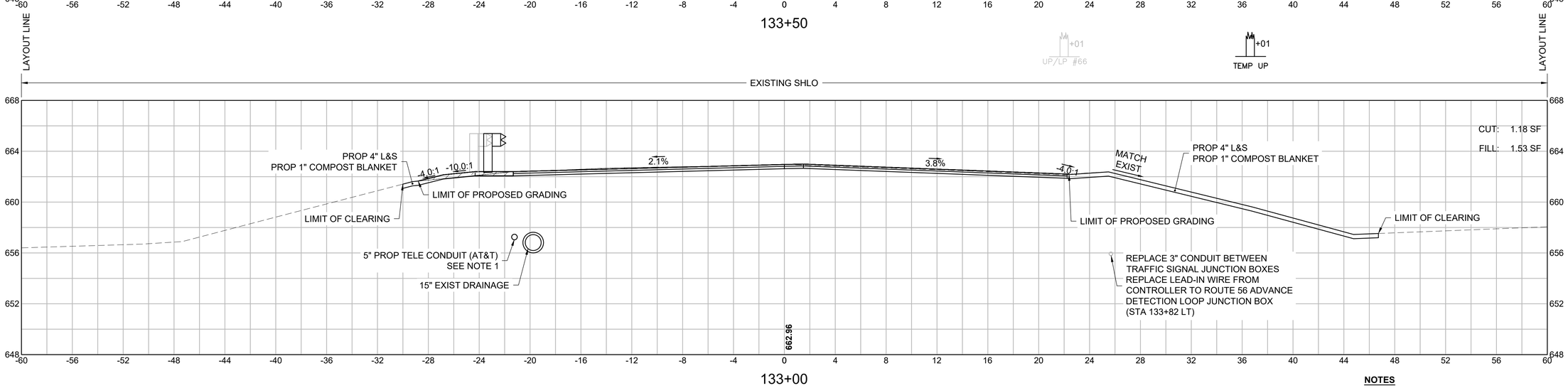

HOR. SCALE IN FEET
4 0 4 8
4 0 4 8
VER. SCALE IN FEET

NOTES

1. PROPOSED CONDUIT LOCATION SHOWN IS APPROXIMATE. COORDINATE WITH AT&T PRIOR TO CONSTRUCTION.
2. TELEPHONE MANHOLE LOCATIONS WERE PROVIDED BY AT&T AND ARE CONCEPTUAL. FINAL LOCATIONS TO BE DETERMINED BY AT&T IN COORDINATION WITH THE ENGINEER.

605323_HD(CROSSSECTIONS).DWG Plotted on 3-Sep-2026 8:47 AM

OXFORD
LEICESTER STREET/RT 56

STATE	FED. AID PROJ. NO.	SHEET NO.	TOTAL SHEETS
MA	HIP(NGB)-004S(015)X	66	66
PROJECT FILE NO.	605323		

CROSS SECTIONS

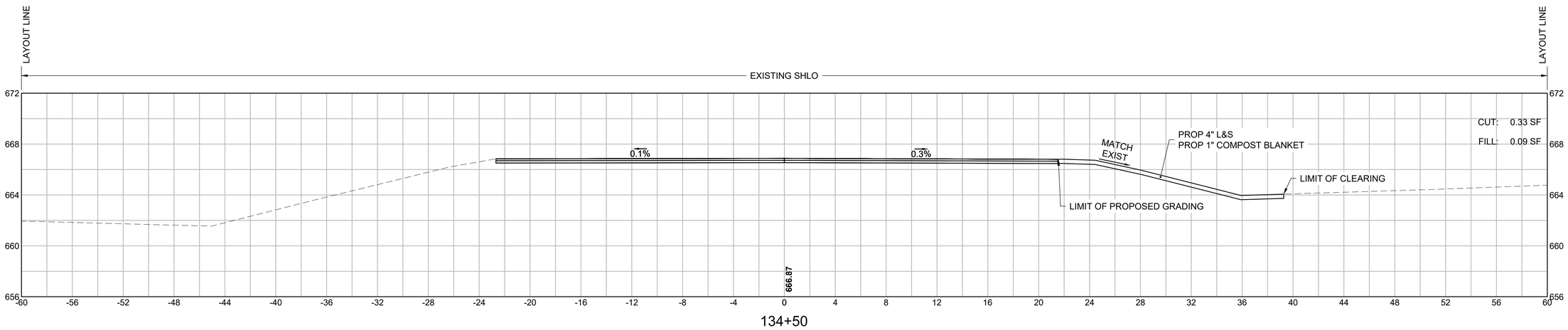

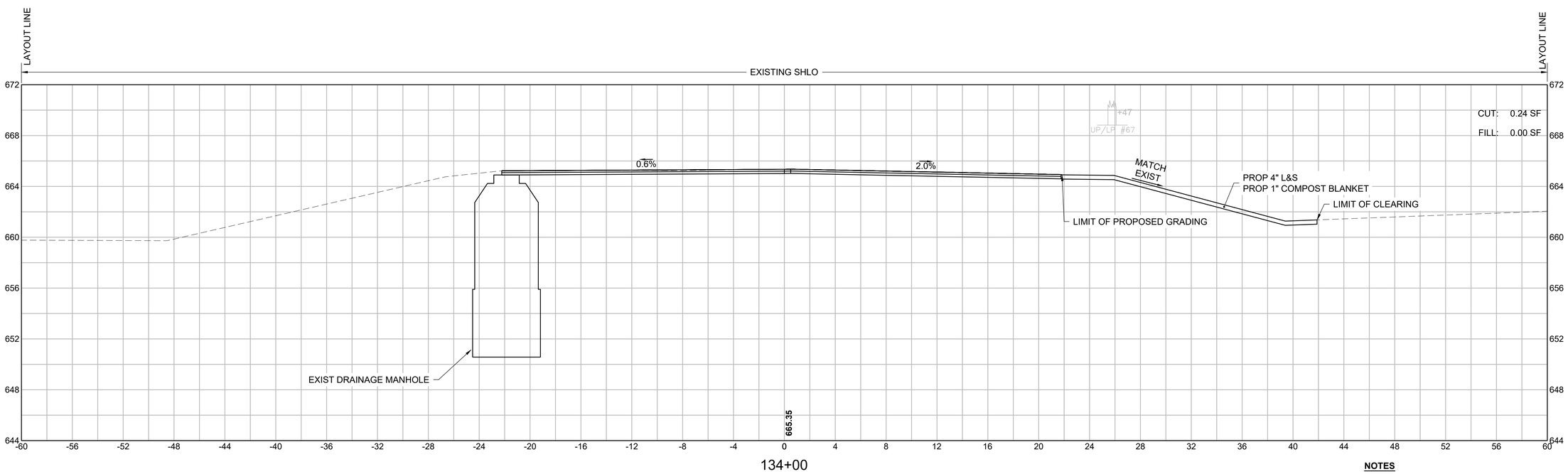

HOR. SCALE IN FEET
4 0 4 8
4 0 4 8
VER. SCALE IN FEET

NOTES

1. PROPOSED CONDUIT LOCATION SHOWN IS APPROXIMATE. COORDINATE WITH AT&T PRIOR TO CONSTRUCTION.
2. TELEPHONE MANHOLE LOCATIONS WERE PROVIDED BY AT&T AND ARE CONCEPTUAL. FINAL LOCATIONS TO BE DETERMINED BY AT&T IN COORDINATION WITH THE ENGINEER.

605323_HD(CROSSSECTIONS).DWG Plotted on 3-Sep-2026 8:47 AM